Horizontal Field Conversion of Air Discharge

Models:
SB
072-300

Step 3: Prepare Blower Housing Assembly

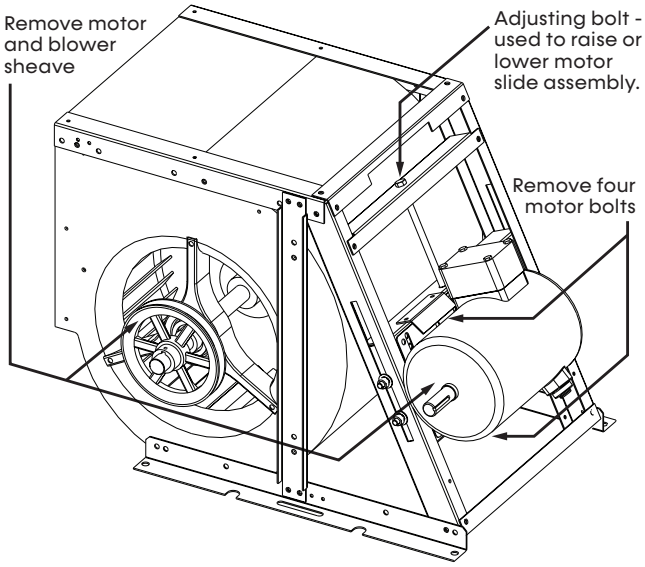

Step 4: Change Motor Clip Orientation

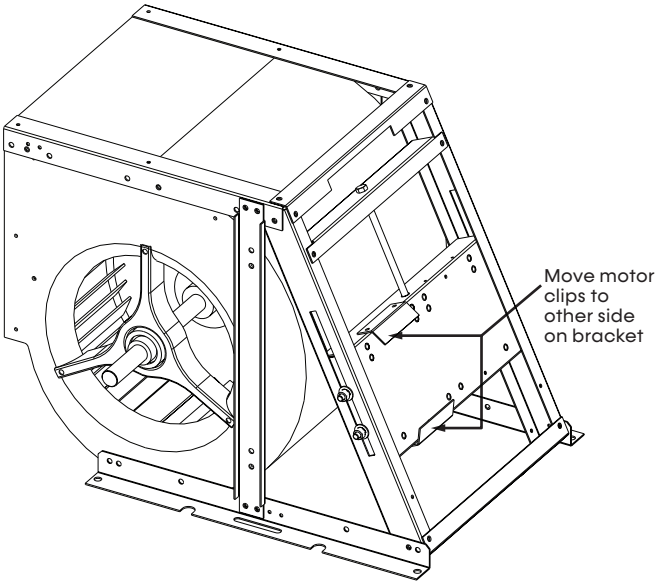

Step 5: Remove Bolts

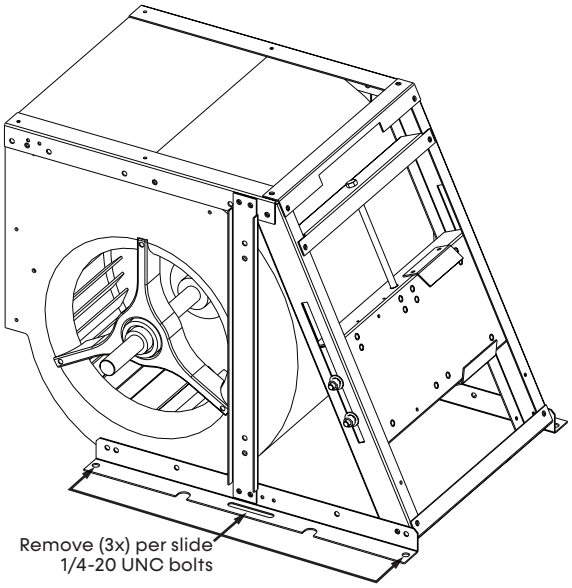

Step 6: Rotate Blower Housing and Bolt Down

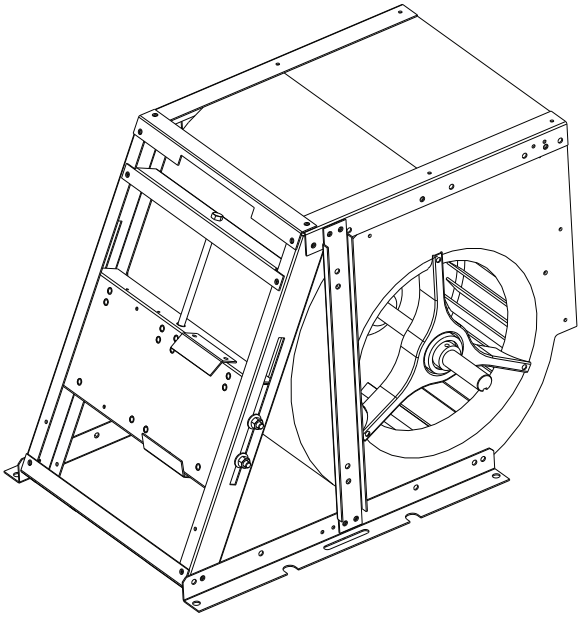

Rotate entire blower housing assembly to rest at back end of the unit. Locate housing holes and bolt down using previous 1/4-20 UNC bolts (3x) each side.

Models:
SB
072-300

Horizontal Field Conversion of Air Discharge

Step 7: Secure Motor, Motor Sheave, Blower Sheave, and Belt

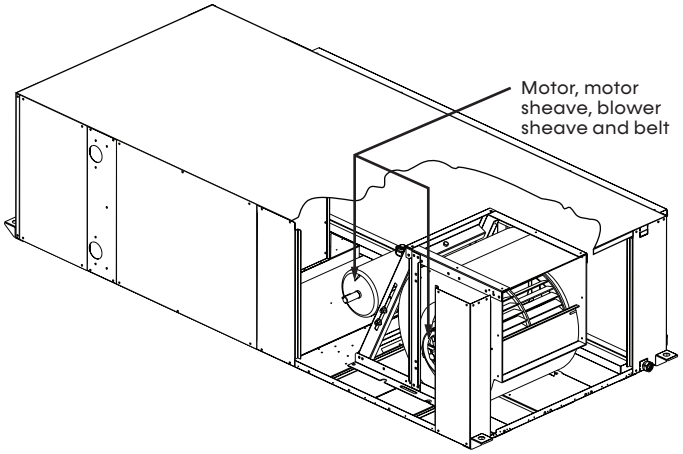

Step 8: Secure Blower Panel and Access Panel

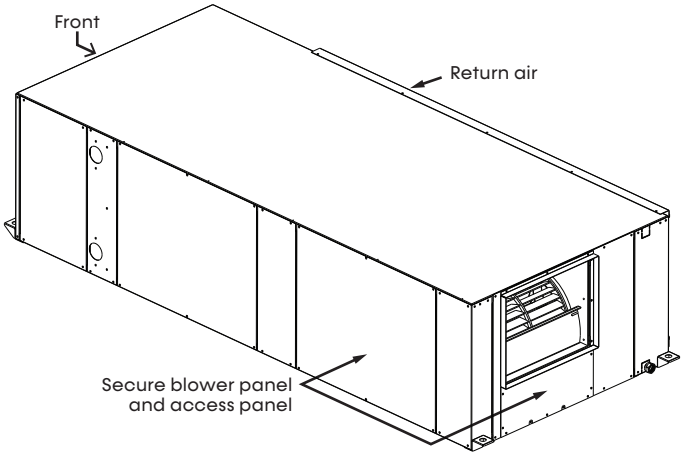

Vertical Installation

Models:
SB
072-300

VERTICAL LOCATION AND ACCESS

SB units are not designed for outdoor installation. Locate the unit in an INDOOR area that allows enough space for installation and for service personnel to perform typical maintenance or repairs. SB units are typically installed in a floor level closet or in a small mechanical room. Refer to the figure below for an illustration of a typical installation. Install units with adequate clearance to allow maintenance and servicing. **NOTE: Minimum clearances for installation are the same as the minimum required service clearances. Consult the service clearances on for reference of installation clearances.** Conform to the following guidelines when selecting unit location:

- Provide adequate clearance for filter replacement and drain pan cleaning. DO NOT block filter access with piping, conduit or other materials. Refer to the product catalog for unit dimensions.
- Provide access for fan and fan motor maintenance and for servicing of the compressor and coils without removal of the unit.
- Provide an unobstructed path to the unit within the closet or mechanical room to enable removal of the unit if necessary.
- Provide access to water valves and fittings, and screwdriver access to the unit side panels, discharge collar and all electrical connections

DUCT SYSTEM DESIGN AND INSTALLATION GUIDELINES

The following application guidelines must be used when installing the Tranquility SB. Failure to follow these guidelines could result in unsatisfactory unit performance and/or premature failure of some unit components. ClimateMaster will not warranty, or accept responsibility for products which fail, have defects, damage or insufficient performance as a result of improper application.

- The duct system must be sized to handle the airflow quietly and must not exceed the maximum allowable External Static Pressure. To maximize sound attenuation, metal supply and return ducts should include internal insulation or be of duct-board construction for the first 10 feet or end of first full-sized elbow.
- Install a flexible connector in all supply and return air ducts close to the unit to inhibit sound transfer to the ducts.
- Do not install uninsulated ducts in an unconditioned space. The unit performance will be adversely affected and damage from condensate can occur.

Figure 5: Typical Vertical Installation

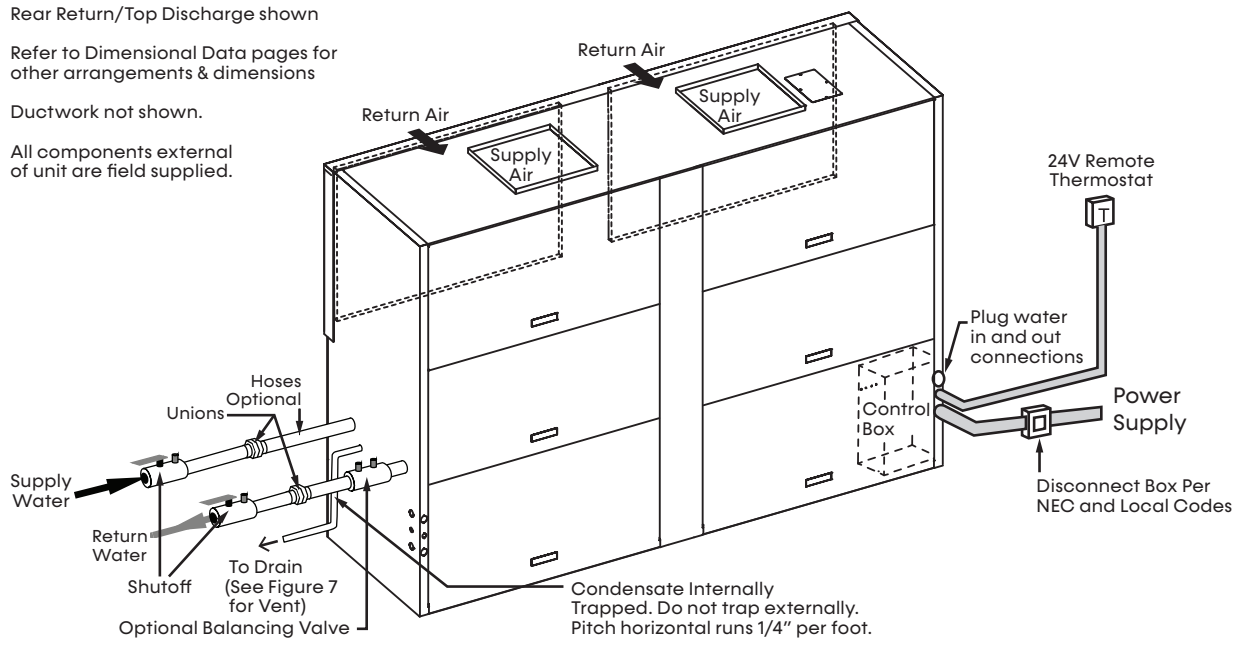

Models:
SB
072-300

Vertical Field Conversion of Air Discharge (072-120)

⚠ WARNING

To prevent injury or death from electrical shock, disconnect electrical power source.

OVERVIEW

Vertical unit sizes 072-120 can be field converted between top and straight (side) discharge and back (end) discharge using the instructions below.

NOTE: Field conversion of discharge air is not available in vertical unit sizes 168 to 300. Be sure to order your unit with the proper discharge air configuration.

PREPARATION

Place in a well-lit area. Conversion should only be attempted by qualified service technicians.

NOTE: To convert from straight discharge to top discharge, reverse the following steps.

Step 1: Remove Panels

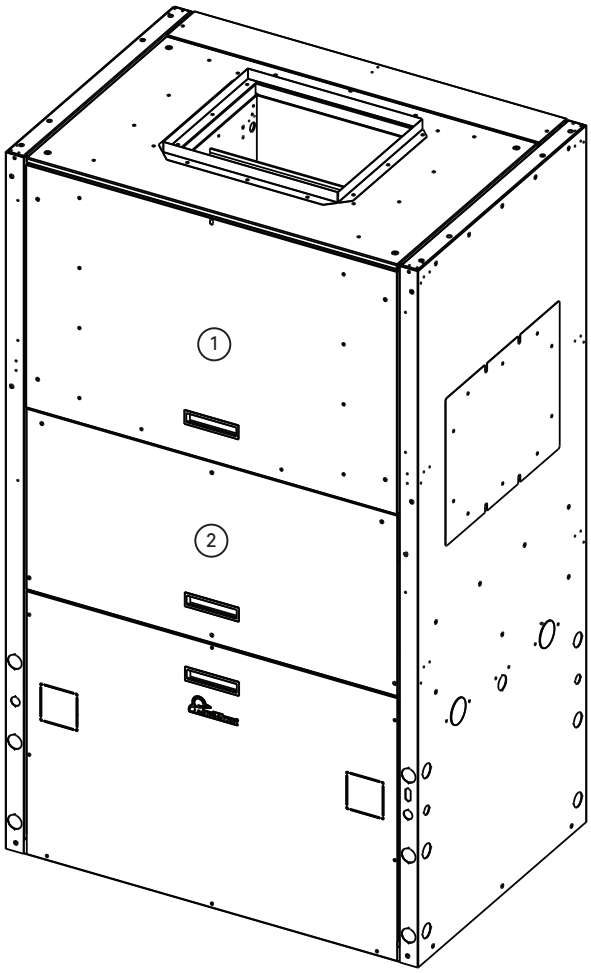

Step 2: Remove Screws

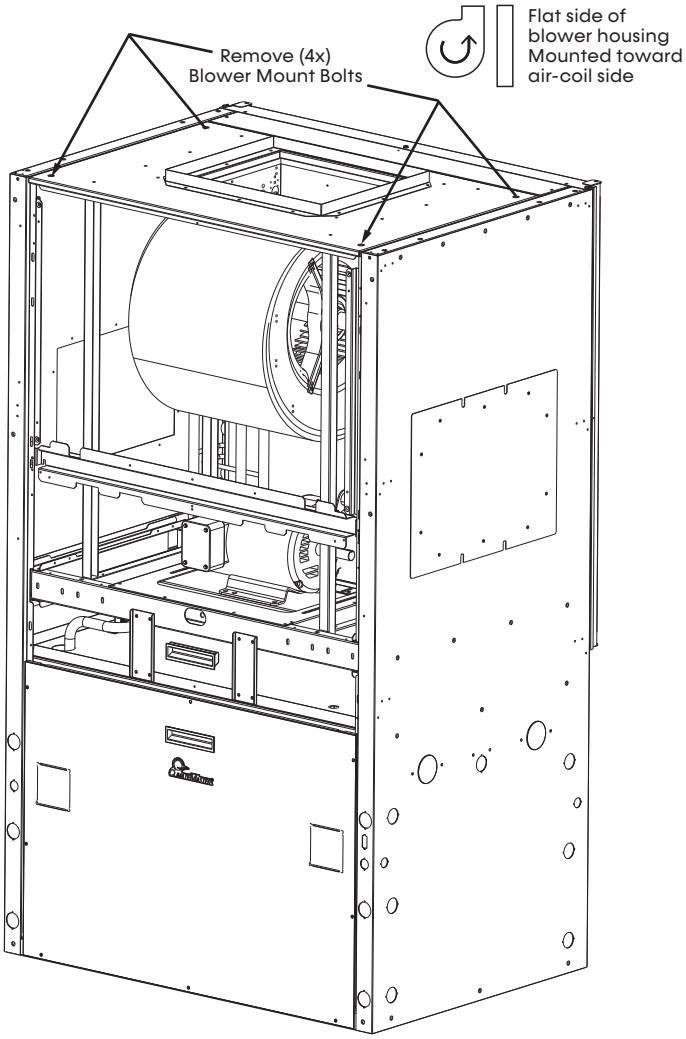

Vertical Field Conversion of Air Discharge (072-120)

Models:
SB
072-300

Step 3: Rotate and reattach blower

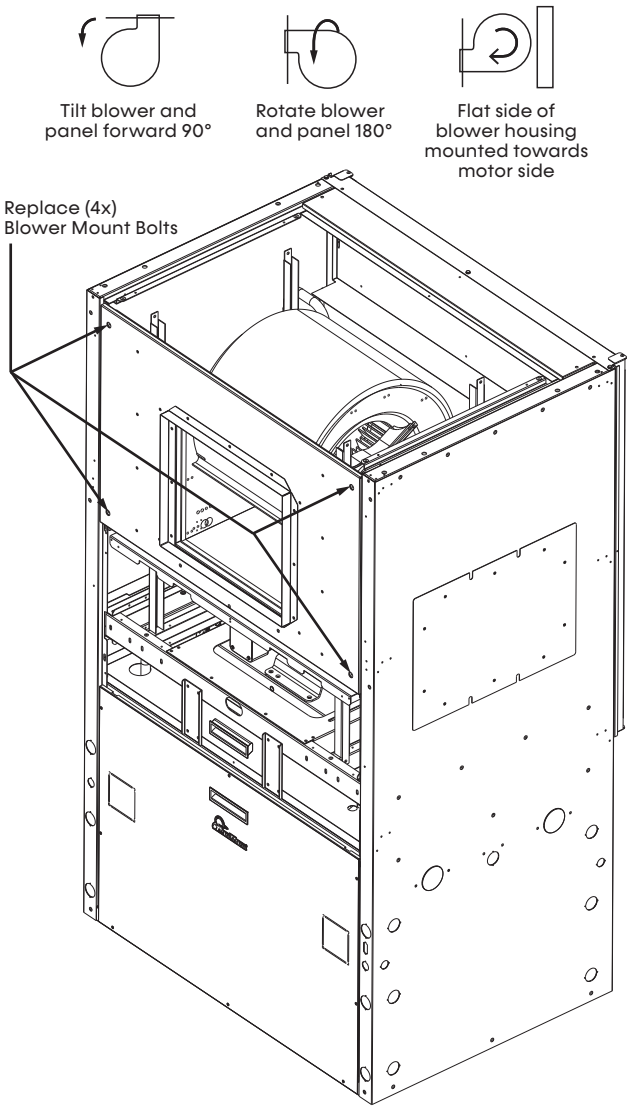

Step 4: Replace and Secure Panels

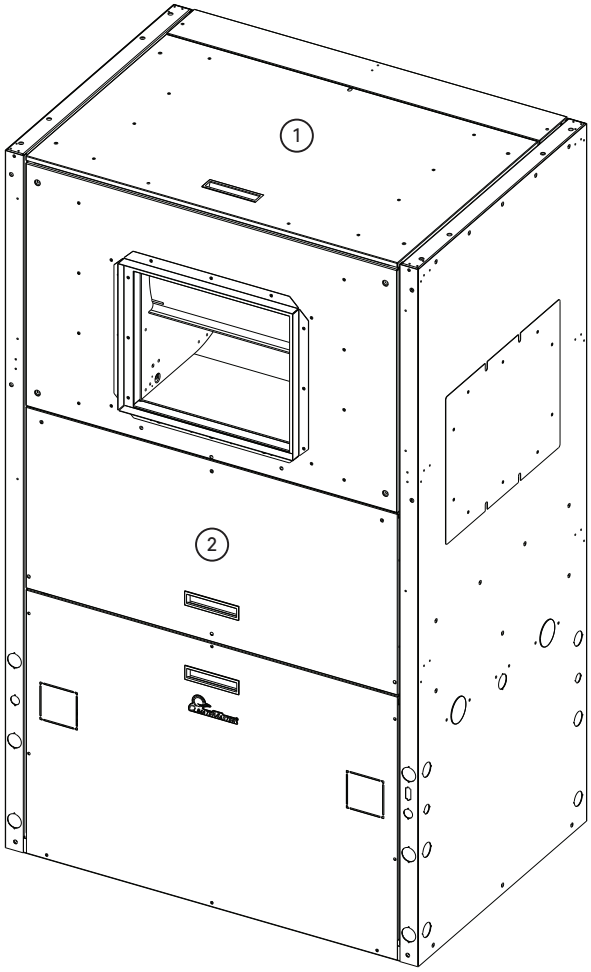

Models:
SB
072-300

Vertical Field Conversion of Control Box (072-300)

⚠ WARNING

To prevent injury or death from electrical shock, disconnect electrical power source.

⚠ NOTICE

You must provide three feet service access (or meet code requirements) for the new control box location.

OVERVIEW

The vertical unit control box can be field converted from front to any other corner for unit sizes 168-300, or opposite corner (water coil side) for unit sizes 072-120.

PREPARATION

Place in a well-lit area. Conversion should only be attempted by a qualified service technician.

Step 1: Remove Panels (SB168-300)

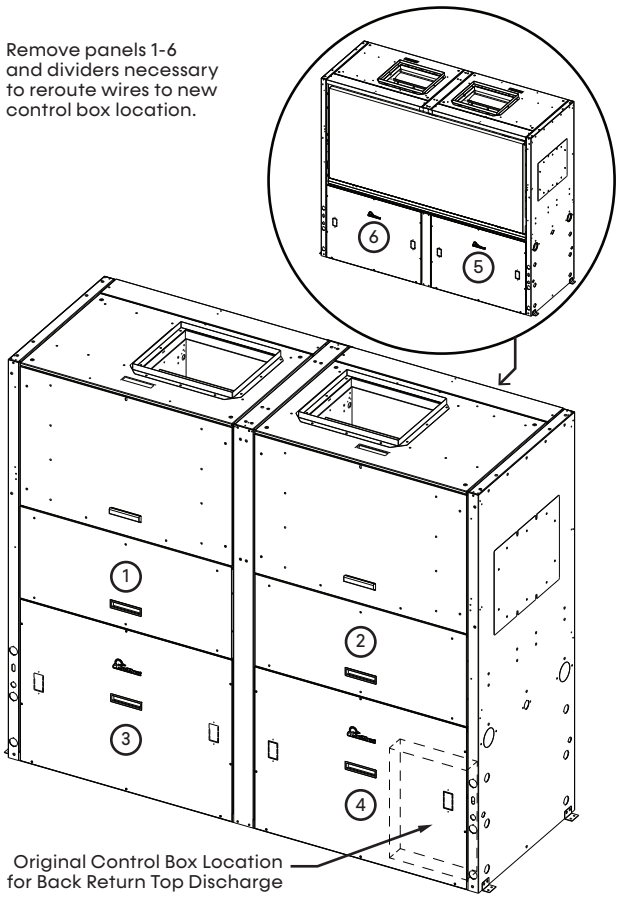

Note: SB168-240 chassis shown.

Step 1: Remove Panels (SB072-120)

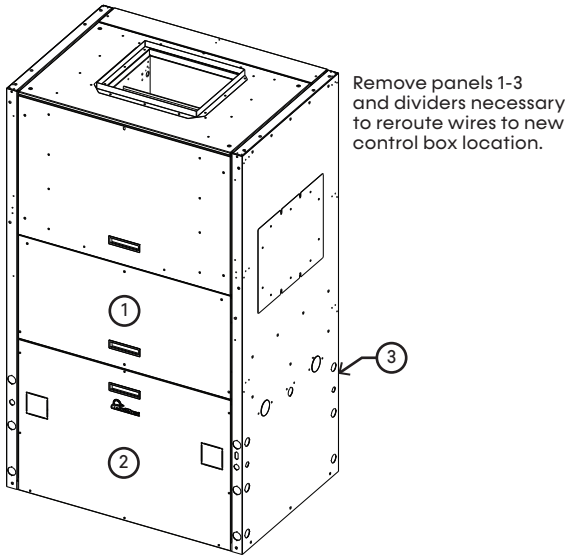

NOTE: After completing step 1, follow steps 2-7 for all sizes.

Step 2: Tag and detach all wires from components, pull wires out of control box, then remove the control box.

Step 3: Attach box to new location.

Step 4: Reroute wires.

NOTE: Keep wires away from hot lines and sharp edges.

Step 5: Reattach wires.

NOTE: Reattach Circuit 1 to the same compressor so that the compressor configuration does not change. Only the location of the control box should change.

Step 6: Verify wiring in the unit matches the configuration wiring diagram.

Step 7: Replace panels.

Vertical Field Conversion of Water Connections (072-240)

Models:
SB
072-300

⚠ WARNING

To prevent injury or death from electrical shock, disconnect electrical power source.

OVERVIEW

For vertical unit sizes 072-240, the water connection can be field converted to opposite side. Connections can be both left, right, or one on each side.

NOTE: Field Conversion of Water Connections is not available on unit size 300. Be sure to order the proper water-connection hand configuration.

PREPARATION

Field conversion must be completed on the ground. If the unit is already hung it should be taken down for the field conversion. Place in a well-lit area. Conversion should only be attempted by a qualified service technician.

Left or Right Side-to-Back Discharge Conversion

NOTE: Water connection direction is determined when facing the motor side of the unit:

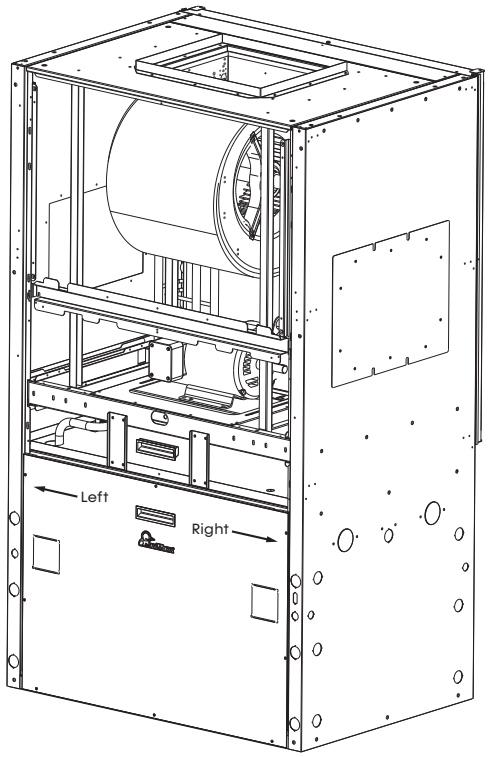

Step 1: Remove panels needed for access to water connections.

Step 2: Remove screws from side panels. Loosen (4x) screws in slots but do not remove.

Step 3: Both water in and out have a union centered in the middle of the unit. Undo both unions, rotate the water legs for opposite configuration, retighten unions, then reattach connection flanges to wrappers. Use slots to adjust and retighten screws in slots.

Step 4: Replace panels.

Step 5: Ensure wiring is per wire diagram.

Models:
SB
072-300

Vertical Condensate Installation

CONDENSATE PIPING

Remove KO on the side to which that drain will be connected. Remove access panels. Inside the unit, untie and uncoil drain hose. Form a trap in the hose ensuring the hose is not kinked or deformed. Connect plate assembly to the side frame with two screws.

Outside of unit, connect 1-inch MPT fitting to the plate assembly. Run the line to building drain. Horizontal runs must be pitched ¼ inch per foot (10 mm per 46 cm) toward drain. Do not trap externally.

The figure below illustrates a typical trap and vent used with the Tranquility SB.

Figure 6: SB Vertical Condensate Piping

All fittings and tubing outside of the unit are field supplied.

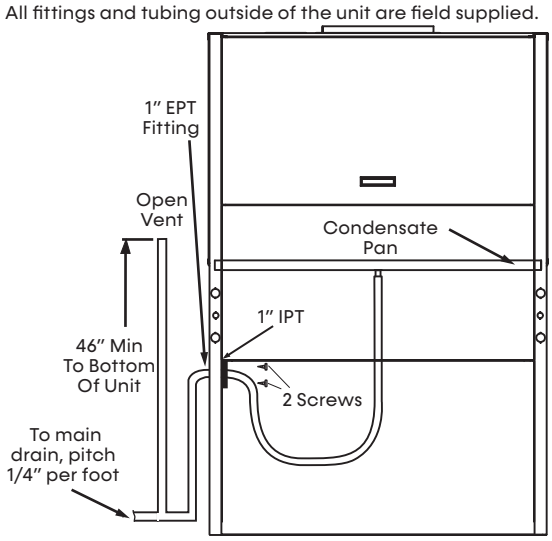

Each unit must be installed with its own individual line to the building's main condensate drain line or riser. Provide a means to flush or blow out the condensate line. DO NOT install units with a common trap and or vent. Always vent the condensate line when dirt or air can collect in the line or a long horizontal drain line is required. Also vent when large units are working against higher external-static pressure than other units connected to the same condensate main since this may cause poor drainage for all units on the line. **WHEN A VENT IS INSTALLED IN THE DRAIN LINE, IT MUST BE LOCATED AFTER THE TRAP IN THE DIRECTION OF THE CONDENSATE FLOW** and opening 46 inches (117 cm) minimum from bottom of unit. Vent the condensate piping per code.

⚠ WARNING

Ensure condensate line is pitched toward drain ¼ inch per foot [10mm per 46cm] of run.

Horizontal and Vertical Installations – Drain main or riser must be sized for all units connected to it.

Pipe Size inch (mm)	Connected Tons	Connected kW
3/4 (19)	<4	<14
1 (25)	<6	<21
1-1/4 (32)	<30	<105
1-1/2 (38)	<50	<175
2 (51)	<150	<527
3 (76)	<300	<1055
4 (102)	<500	<1758

Ensure all connections are secure and water tight.

After drain is connected to main and all drain connections are secure and water tight, pour one gallon of water into condensate pan. The water should drain out freely. Repair any leaks.

- On units with multiple fan outlets a "pair of pants" duct connection must be used for proper air balance and distribution and to prevent fan oscillation.
- Include at least one 90-degree turn in supply air ducts to reduce noise transmission.
- Existing ducts must be checked to ensure proper size and configuration prior to installation of any replacement unit. Also inspect for and repair all air leaks in existing ducts.
- Units may only be connected to a dedicated duct system. Consult the factory BEFORE connecting multiple units to a common duct system.
- Never connect a unit to a duct system with automatic or modulating dampers, VAV boxes, etc. in the supply air system. Never allow a situation where the total unit CFM can drop below the minimum required for proper unit operation.
- Never connect a bypass damper from the supply air duct to the return air duct. Never allow the return air temperature to drop below the minimum allowable normal temperature for proper unit operation.
- Do not use SB units for 100% outdoor air treatment. Do not add hot-gas-bypass to "convert" a unit for outdoor air treatment. Always use a dedicated outdoor air unit for outdoor air treatment.
- Do not exceed 10% of the total unit CFM with untreated outdoor air.

Piping Installation

Models:
SB
072-300

INSTALLATION SUPPLY AND RETURN PIPING

Follow these piping guidelines:

1. Install a drain valve at the base of each supply and return riser to facilitate system flushing.
2. Install shut-off/balancing valves and unions at each unit to permit unit removal for servicing.
3. Place strainers at the inlet of each system circulating pump.
4. Select the proper hose length to allow slack between connection points. Hoses may vary in length by +2% to -4% under pressure.
5. Refer to Table 2. Do not exceed the minimum bend radius for the hose selected. Exceeding the minimum bend radius may cause the hose to collapse, which reduces water flow rate. Install an angle adapter to avoid sharp bends in the hose when the radius falls below the required minimum.

Insulation is not required on loop water piping except where the piping runs through unheated areas, outside the building or when the loop water temperature is below the minimum expected dew point of the pipe ambient conditions. Insulation is required if loop water temperature drops below the dew point (insulation is required for ground loop applications in most climates).

Pipe-joint compound is not necessary when water thread sealant tape is pre-applied to hose assemblies or when flared-end connections are used. If pipe-joint compound is preferred, use compound only in small amounts on the external pipe threads of the fitting adapters. Prevent sealant from reaching the flared surfaces of the joint.

NOTE: When antifreeze is used in the water loop, ensure that it is compatible with the thread-sealant tape or pipe-joint compound that is applied.

Maximum allowable torque for brass fittings is 30 ft-lbs (41 N-m). If a torque wrench is not available, tighten finger-tight plus one quarter turn. Tighten steel fittings as necessary.

Optional pressure-rated hose assemblies designed specifically for use with ClimateMaster units are available. Similar hoses can be obtained from alternate suppliers. Supply and return hoses are fitted with swivel-joint fittings at one end to prevent kinking during installation.

The figure below illustrates a typical supply/return hose kit. Adapters secure hose assemblies to the unit and risers. Install hose assemblies properly and check regularly to avoid system failure and reduced service life.

⚠ WARNING

Polyolester Oil, commonly known as POE oil, is a synthetic oil used in many refrigeration systems including those with R-454B refrigerant. POE oil, if it ever comes in contact with PVC or CPVC piping, may cause failure of the PVC/CPVC. PVC/CPVC piping should never be used as supply or return water piping with water-source heat pump products containing R-454B as system failures and property damage may result.

⚠ CAUTION

Corrosive system water requires corrosion resistant fittings and hoses, and may require water treatment.

⚠ CAUTION

Do not bend or kink supply lines or hoses.

⚠ CAUTION

Piping must comply with all applicable codes.

⚠ NOTICE

Do not allow hoses to rest against structural building components. Compressor vibration may be transmitted through the hoses to the structure, causing unnecessary noise complaints.

Table 2: Metal Hose Minimum Bend Radii

Hose Diameter	Minimum Bend Radii
1/2" [12.7 mm]	2-1/2" [6.4 cm]
3/4" [19.1 mm]	4" [10.2 cm]
1" [25.4 mm]	5-1/2" [14 cm]
1-1/4" [31.8 mm]	6-3/4" [17.1 cm]

Figure 7: Supply/Return Hose Kit

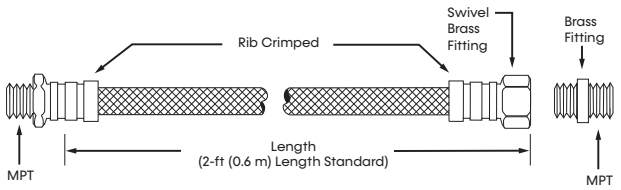

Models:
SB
072-300

Water-Loop Heat Pump Applications

COMMERCIAL WATER-LOOP APPLICATIONS

Commercial systems typically include a number of units connected to a common piping system. Any unit plumbing maintenance work can introduce air into the piping system; therefore air elimination equipment is a major portion of the mechanical room plumbing. To avoid condensation, consider insulating the piping surfaces. The manufacturer recommends piping insulation any time the water temperature is below 60°F (15.6°C). Do not use metal to plastic threaded joints due to their tendency to leak over time.

Water thread-sealant tape or thread sealant is recommended to minimize internal fouling of the heat exchanger. Do not over tighten connections and route piping so as not to interfere with service or maintenance access. Hose kits are available from the manufacturer in different configurations for connection between the unit and the piping system. Depending on selection, hose kits may include shutoff valves, P/T plugs for performance measurement, high pressure stainless-steel braided hose, "Y" type strainer with blow down valve, and/or with blow down valve, auto-flow valve and swivel connections.

Flush the piping system to remove dirt, piping chips, and other foreign material prior to operation (see Piping System Cleaning and Flushing in this manual).

The flow rate is usually set between 2.25 and 3.5 GPM per ton (2.9 and 4.5 l/m per kW) of cooling capacity. The manufacturer recommends 3 GPM per ton (3.9 l/m per kW) for most water-loop heat pump applications. To ensure proper maintenance and servicing, P/T ports are imperative for temperature, flow verification, and performance checks.

Water-loop heat pump (cooling tower/boiler) systems typically utilize a common loop maintained between 60 - 90°F (16 - 32°C). The use of a closed-circuit evaporative cooling tower with a secondary heat exchanger between the tower and the water loop is recommended. If an open type cooling tower is used continuously, chemical treatment and filtering is necessary.

⚠ WARNING

Never jumper terminal "A" from CXM2 or DXM2.5 #1 to CXM2 or DXM2.5 #2 on multi-compressor/multi-control board units. For more information, see the motorized water valve wiring examples in electrical section of this document.

⚠ CAUTION

Many units are installed with a factory or field-supplied manual or electric shutoff valve. DAMAGE WILL OCCUR if shutoff valve is closed during unit operation. A high-pressure switch must be installed on the heat-pump side of any field-provided shutoff valves and connected to the heat pump controls in series with the built-in refrigerant circuit high-pressure switch to disable compressor operation if water pressure exceeds pressure switch setting. The field-installed high-pressure switch shall have a cut-out pressure of 300 psig and a cut-in pressure of 250 psig. This pressure switch can be ordered from ClimateMaster with a ¼-inch internal-flare connection as part number 39B0005N02.

Figure 8: Typical Water-Loop Application

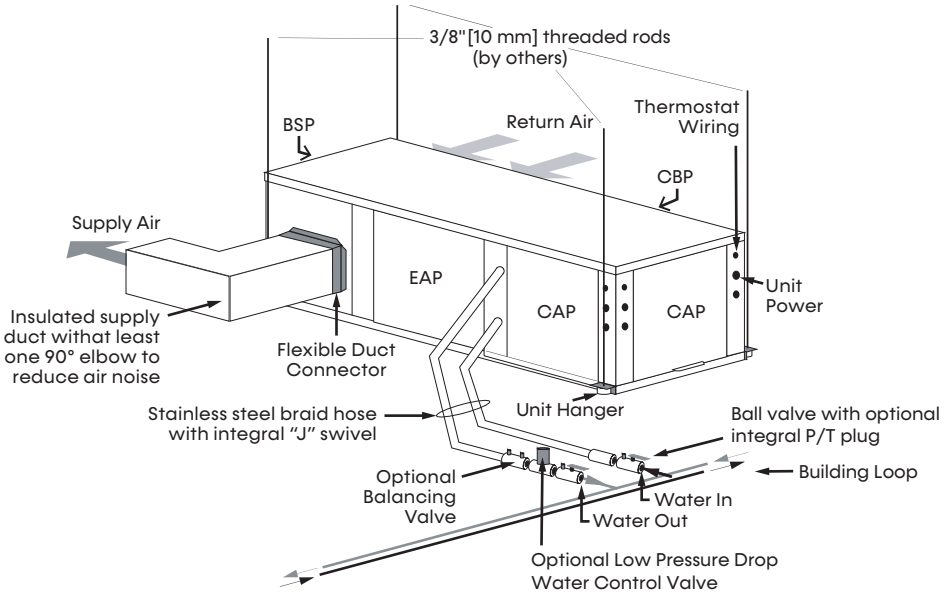

Ground-Loop Heat Pump Application

Models:
SB
072-300

⚠ CAUTION

The following instructions represent industry accepted installation practices for closed loop earth coupled heat pump systems. Instructions are provided to assist the contractor in installing trouble free ground loops. These instructions are recommendations only. State/provincial and local codes MUST be followed and installation MUST conform to ALL applicable codes. It is the responsibility of the installing contractor to determine and comply with ALL applicable codes and regulations.

⚠ CAUTION

Ground loop applications require extended range equipment and additional refrigerant/water circuit insulation.

PRE-INSTALLATION

Prior to installation, locate and mark all existing underground utilities, piping, etc. Install loops for new construction before sidewalks, patios, driveways, and other construction has begun. During construction, accurately mark all ground loop piping on the plot plan as an aid in avoiding potential future damage to the installation.

PIPING INSTALLATION

All ground loop piping materials should be limited to polyethylene fusion only for in-ground sections of the loop. Galvanized or steel fittings should not be used at any time due to their tendency to corrode. All plastic to metal threaded fittings should be avoided due to their potential to leak in ground coupled applications. A flanged fitting should be substituted. P/T plugs should be used so that flow can be measured using the pressure drop of the unit heat exchanger.

Ground loop temperatures can range between 25 and 110°F (-4 to 43°C). Flow rates between 2.25 and 3 GPM (2.41 to 3.23 l/m per kW) of cooling capacity is recommended in these applications.

Test individual horizontal loop circuits before backfilling. Test vertical U-bends and pond loop assemblies prior to installation. Pressures of at least 100 psi (689 kPa) should be used when testing. Do not exceed the pipe pressure rating. Test entire system when all loops are assembled.

FLUSHING THE GROUND LOOP

Upon completion of system installation and testing, flush the system to remove all foreign objects and purge to remove all air.

ANTIFREEZE

In areas where minimum entering loop temperatures drop below 40°F (5°C) or where piping will be routed through areas subject to freezing, antifreeze is required. Alcohols and glycols are commonly used as antifreeze; however your local sales office should be consulted to determine the antifreeze best suited to your area. Freeze protection should be maintained to 15°F (9°C) below the lowest expected entering loop temperature. For example, if 30°F (-1°C) is the minimum expected entering loop temperature, the leaving loop temperature would be 22 to 25°F (-6 to -4°C) and freeze protection should be at 15°F (-10°C).

Calculation is as follows:

30°F - 15°F = 15°F [-1°C - 9°C = -10°C]

All alcohols should be premixed and pumped from a reservoir outside of the building when possible or introduced under the water level to prevent fumes. Calculate the total volume of fluid in the piping system. Then use the percentage by volume shown in the table below for the amount of antifreeze needed. Antifreeze concentration should be checked from a well mixed sample using a hydrometer or refractometer to measure specific gravity.

Table 3: Antifreeze Percentages by Volume

Type	Minimum Antifreeze Concentration % for Low Temperature Protection			
	10°F [-12.2°C]	15°F [-9.4°C]	20°F [-6.7°C]	25°F [-3.9°C]
Methanol	25%	21%	16%	10%
100% USP food grade Propylene Glycol	38%	25%	22%	15%
Ethanol*	29%	25%	20%	14%

* Must not be denatured with any petroleum based product

Models:
SB
072-300

Closed-Loop External Central Pumping Applications

Figure 9: Typical Closed-Loop with Central-Pumping Application (with Internal Modulating Motorized Valve Shown)

Tranquility SB units are available with a modulating water valve option for closed-loop applications with external central pumping (designated by a C or N in the 11th position of the unit model number). With this option, the Modulating Valve is regulated by the CXM2 Communicating Controls based on entering and leaving water temperature (**Δ**T). The CXM2 outputs a 0-10V signal to determine valve position (flow rate). The modulating valve defaults to closed position if it loses signal but still receives 24V power. If the motorized modulating valve loses both signal from the CXM2 AND 24V power, it remains in the same position as when it lost 24V power.

NOTE: The C_v (flow coefficient) of the valve used in these units is DIFFERENT than the C_v of the valve used in the open loop unit. It is not advisable for use in open loop applications as sound/noise issues may result. Units with the water circuit for closed-loop central-pumping option are only available with a copper water coil.

To manually open the internal modulating motorized water valve, push down on the lock-release button while turning the handle to the open position as shown in the figure, Internal Modulating Motorized Valve Positions. This fully opens the valve for flushing. Once flushing is complete, press the lock release again and return the valve handle to its normally closed position.

Figure 10: Internal Modulating Motorized Valve Positions

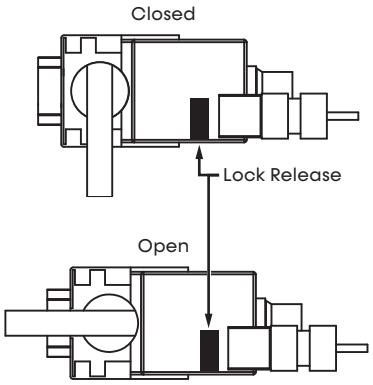

Water Quality Requirements

Models:
SB
072-300

Table 4: Water Quality Requirements

Clean water is essential to the performance and life span of water-source heat pumps. Contaminants, chemicals, and minerals all have the potential to cause damage to the water heat exchanger if not treated properly. All closed-loop water systems should undergo water quality testing and be maintained to the water quality standards listed in this table. All open-loop water systems shall be tested upon installation and periodically to ensure water quality standard in the table below are met.

Water Quality Requirements
For Closed-Loop and Open-Loop Systems

	Description	Symbol	Units	Heat Exchanger Type			
				Closed Loop Recirculating		Open Loop, Tower, Ground Source Well	
				All Heat Exchanger Types	Coaxial HX Copper Tube in Tube	Coaxial HX Cupronickel	Brazed-Plate HX 316 SS
Scaling Potential	pH - Chilled Water <85°F			7.0 to 9.0	7.0 to 9.0	7.0 to 9.0	7.0 to 9.0
	pH - Chilled Water >85°F			8.0 to 10.0	8.0 to 10.0	8.0 to 10.0	8.0 to 10.0
	Alkalinity	($HCO3^-$)	ppm - $CaC0_3$ equivalent	50 to 500	50 to 500	50 to 500	50 to 500
	Calcium	(Ca)	ppm	<100	<100	<100	<100
	Magnesium	(Mg)	ppm	<100	<100	<100	<100
	Total Hardness	($CaCO_3$)	ppm - $CaC0_3$ equivalent	30 to 150	150 to 450	150 to 450	150 to 450
	Langelier Saturation Index	LSI		-0.5 to +0.5	-0.5 to +0.5	-0.5 to +0.5	-0.5 to +0.5
	Ryznar Stability Index	RSI		6.5 to 8.0	6.5 to 8.0	6.5 to 8.0	6.5 to 8.0
Corrosion Prevention	Total Dissolved Solids	(TDS)	ppm - $CaC0_3$ equivalent	<1000	<1000	<1000	<1000
	Sulfate	(SO_4^{2-})	ppm	<200	<200	<200	<200
	Nitrate	(NO_3^-)	ppm	<100	<100	<100	<100
	Chlorine (free)	(Cl)	ppm	<0.5	<0.5	<0.5	<0.5
	Chloride (water < 80°F)	(Cl^-)	ppm	<20	<20	<150	<150
	Chloride (water > 120°F)	(Cl^-)	ppm	<20	<20	<125	<125
	Hydrogen Sulfide[α]	(H_2S)	ppb	<0.5	<0.5	<0.5	<0.5
	Carbon Dioxide	(CO_2)	ppm	0	<50	10 to 50	10 to 50
	Iron Oxide	(Fe)	ppm	<1.0	<1.0	<1.0	<0.2
	Manganese	(Mn)	ppm	<0.4	<0.4	<0.4	<0.4
	Ammonia	(NH_3)	ppm	<0.05	<0.1	<0.1	<0.1
	Chloramine	(NH_2CL)	ppm	0	0	0	0
Fouling & Biological	Iron bacteria		cells/mL	0	0	0	0
	Slime-forming bacteria		cells/mL	0	0	0	0
	Sulfate-reducing bacteria		cells/mL	0	0	0	0
	Suspended Solids[β]	(TSS)	ppm	<10	<10	<10	<10
Electrolysis All HX types	Earth Ground Resistance[χ]		Ohms	Consult NEC and local electrical codes for grounding requirements			
	Electrolysis Voltage[δ]		mV	Measure voltage and internal water loop to HP ground			
	Leakage Current[δ]		mA	Measure current in water loop pipe			
	Building Primary Electrical Ground to unit, must meet local diameter and penetration length requirements. Do not connect heat pump to steel pipe unless dissimilar materials are separated by using Di-electric unions. Galvanic corrosion of heat pump water pipe will occur						

Models:
SB
072-300

Water Quality Requirements

1. The Water Quality table provides water quality requirements for coaxial and brazed-plate heat exchangers.
2. The water must be evaluated by an independent testing facility comparing site samples against this table. When water properties are outside of these parameters, the water must either be treated by a professional water treatment specialist to bring the water quality within the boundaries of this specification, or an external secondary heat exchanger must be used to isolate the heat pump water system from the unsuitable water. Failure to do so will void the warranty of the heat pump system and will limit liability for damage caused by leaks or system failure.
3. Regular sampling, testing and treatment of the water is necessary to assure that the water quality remains within acceptable levels thereby allowing the heat pump to operate at optimum levels.
4. If closed-loop systems are turned off for extended periods, water samples must be tested prior to operating the system.
5. For optimal performance, it is recommended that the closed-loop piping systems are initially filled with de-ionized water.
6. Well water with chemistry outside of these boundaries, and salt water or brackish water requires an external secondary heat exchanger. Surface/Pond water should not be used.
7. If water temperature is expected to fall below 40°F (4.4°C), antifreeze is required. Refer to the heat pump IOM for the correct solution ratios to prevent freezing.

Strainer / Filter Sizing

Mesh Size	Particle Size		
	Microns	Millimeter	Inch
20	840	0.840	0.0340
30	533	0.533	0.0210
60	250	0.250	0.0100
100	149	0.149	0.0060
150	100	0.100	0.0040
200	74	0.074	0.0029

- ppm = parts per million
- ppb = parts per billion

α Hydrogen sulfide has an odor of rotten eggs. If one detects this smell, a test for H_2S must be performed. If H_2S is detected above the limit indicated, remediation is necessary. Consult with your water testing/treatment professional. If a secondary heat exchanger is required, use appropriate materials as recommended by the heat exchanger supplier.

β Suspended solids and particulates must be filtered to prevent fouling and failure of heat exchangers. Strainers or particulate filters must be installed to provide a maximum particle size of 600 micron (0.60 mm, 0.023 inch) using a 20 to 30 mesh screen size. When a loop is installed in areas with fine material such as sand or clay, further filtration is required to a maximum of 100 micron. Refer to the Strainer / Filter Sizing Chart to capture the particle sizes encountered on the site.

χ The WSHP piping system or other plumbing pipes must not be used as the building ground. An electrical grounding system using a dedicated ground rod meeting NEC and local electrical codes must be installed.

δ Refer to the Antifreeze Percentages by Volume table for instructions on measuring resistance and leakage currents within water loops.

Water Quality Requirements

Models:
SB
072-300

Measuring Earth Ground Resistance for Ground-Water Applications

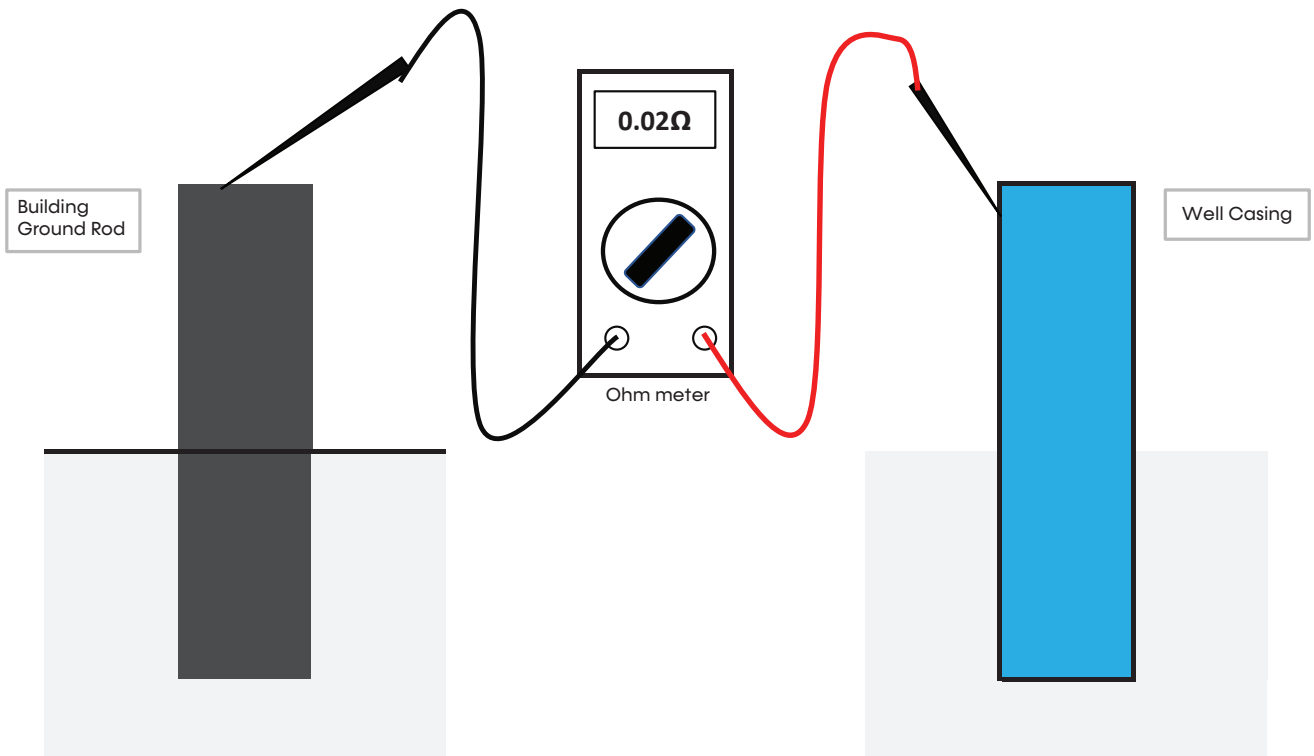

Measure the earth ground bond using an Ohm meter between the building's ground rod and the steel well casing.

The resistance measured should be zero Ohms. The NEC allows a resistance to ground up to 20 Ohms. Any resistance above zero indicates a poor earth ground, which may be the result of a hot neutral line or that conductive water is present. Both of these may lead to electrolysis and corrosion of the heat pump piping. A check for both should be performed and resolved.

NOTE: If the well casing is plastic, a conductive path can be achieved by inserting a #6 AWG bare copper wire into the well water. Remove the temporary conductor when finished.

Models:
SB
072-300

Water Quality Requirements

Measuring Electrolysis, Voltage, and Current for Ground-Water Applications

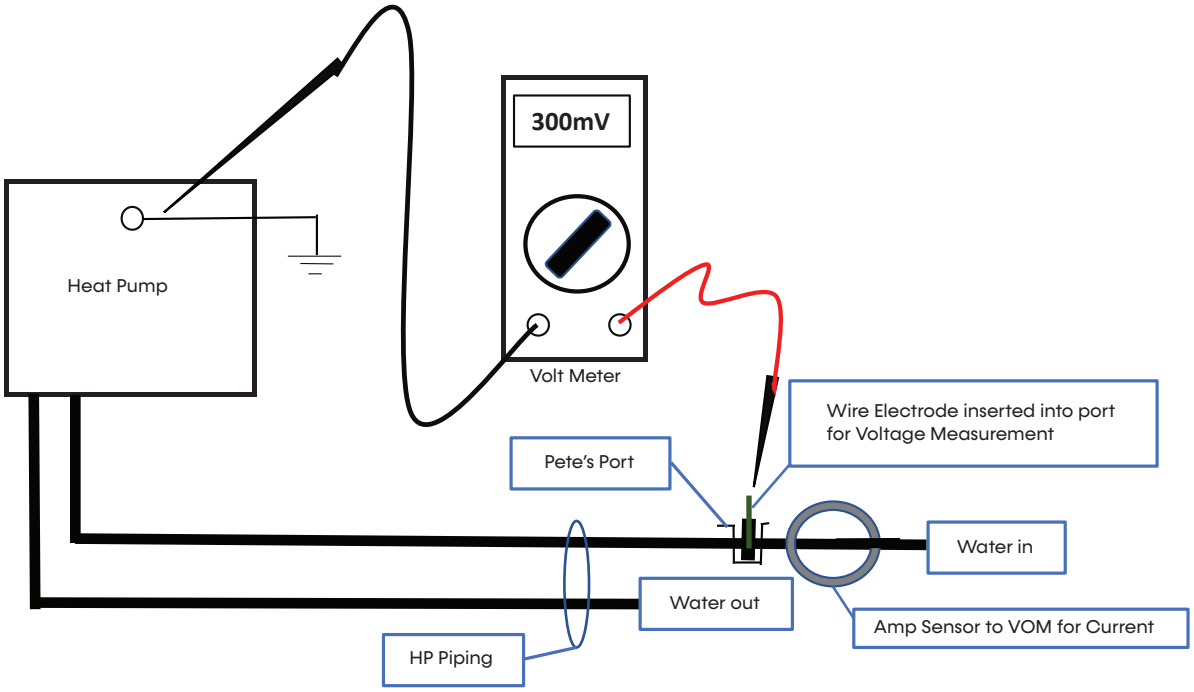

Measure the electrolysis voltage using a volt meter between the heat pump ground and a #14 AWG solid copper wire electrode inserted into the water using a Pete's style access port.

The heat pump must be operating and the water stream flowing.

The voltage measured should be less than 300mV (0.300V). If the voltage is higher than 500mV, electrolysis will occur and corresion will result.

If voltage is measured, the cause is a high-resistance earth ground or current on the neutral conductor. Remedial measures should be performed.

Measure the current flowing through the piping system by using an amp clamp probe on the water-in line. The heat pump must be operating and the water stream flowing.

There should be zero amps measured. If current is present, there is leakage current to the plumbing system and it must be rectified to prevent pipe corrosion.

Electrical Data: Standard

Models:
SB
072-300

Model	Voltage Code	Voltage	Min/Max Voltage	Blower Option	Compressor			Fan Motor FLA	Rated Current Amps	Min Circuit Amps	SCCR kA RMS Symetrical	SCCR Volts Maximum	Max Fuse HACR Amps
					Qty	RLA	LRA						
SB072	K	208/230-3-60	187/253	1,2,3	2	12.2	97.5	3.0	27.4	30.5	5	600	40
				4,5	2	12.2	97.5	5.8	30.2	33.3	5	600	45
				6	2	12.2	97.5	5.2	29.6	32.6	5	600	40
	L	460-3-60	414/506	1,2,3	2	5.8	44.3	1.4	13.0	14.5	5	600	20
				4,5	2	5.8	44.3	2.9	14.5	16.0	5	600	20
				6	2	5.8	44.3	6.9	18.5	20.2	5	600	25
	M	575-3-60	518/633	1,2,3	2	4.5	27.1	1.2	10.2	11.3	5	600	15
				4,5	2	4.5	27.1	2.2	11.2	12.3	5	600	15
SB096	K	208/230-3-60	187/253	1,2,3	2	12.8	120.4	5.8	31.4	34.6	5	600	45
				4,5	2	12.8	120.4	8.2	33.8	37.0	5	600	45
				6	2	12.8	120.4	9.3	34.9	38.1	5	600	50
	L	460-3-60	414/506	1,2,3	2	6.0	49.4	2.9	14.9	16.4	5	600	20
				4,5	2	6.0	49.4	4.1	16.1	17.6	5	600	20
				6	2	6.0	49.4	9.6	21.6	24.0	5	600	30
	M	575-3-60	518/633	1,2,3	2	5.8	41.0	2.2	13.8	15.3	5	600	20
				4,5	2	5.8	41.0	3.2	14.8	16.3	5	600	20
SB120	K	208/230-3-60	187/253	1,2,3	2	18.6	155.0	8.2	45.4	50.1	5	600	60
				4,5	2	18.6	155.0	14.0	51.2	55.9	5	600	70
				6	2	18.6	155.0	11.0	48.2	52.8	5	600	70
	L	460-3-60	414/506	1,2,3	2	8.3	58.1	4.1	20.7	22.8	5	600	30
				4,5	2	8.3	58.1	6.5	23.1	25.2	5	600	30
				6	2	8.3	58.1	13.6	30.2	33.6	5	600	45
	M	575-3-60	518/633	1,2,3	2	7.7	47.8	3.2	18.6	20.5	5	600	25
				4,5	2	7.7	47.8	5.2	20.6	22.5	5	600	30
SB168	K	208/230-3-60	187/253	1,2,3	2	24.4	200.0	8.2	57.0	63.1	5	600	80
				4,5	2	24.4	200.0	14.0	62.8	68.9	5	600	90
				6	2	24.4	200.0	8.9	57.7	63.8	5	600	80
	L	460-3-60	414/506	1,2,3	2	11.9	103.0	4.1	27.9	30.9	5	600	40
				4,5	2	11.9	103.0	6.5	30.3	33.3	5	600	45
				6	2	11.9	103.0	13.6	37.4	40.8	5	600	50
	M	575-3-60	518/633	1,2,3	2	9.4	78.0	3.2	22.0	24.4	5	600	30
				4,5	2	9.4	78.0	5.2	24.0	26.4	5	600	35
SB192	K	208/230-3-60	187/253	1,2,3	2	27.7	178.5	8.2	63.6	70.5	5	600	90
				4,5	2	27.7	178.5	14.0	69.4	76.3	5	600	100
				6	2	27.7	178.5	14.6	70.0	76.9	5	600	100
	L	460-3-60	414/506	1,2,3	2	11.5	103.0	4.1	27.1	30.0	5	600	40
				4,5	2	11.5	103.0	6.5	29.5	32.4	5	600	40
				6	2	11.5	103.0	13.6	36.6	40.0	5	600	50
	M	575-3-60	518/633	1,2,3	2	9.0	78.0	3.2	21.2	23.5	5	600	30
				4,5	2	9.0	78.0	5.2	23.2	25.5	5	600	30
SB240	K	208/230-3-60	187/253	1,2,3	2	28.5	255.0	14.0	71.0	78.1	5	600	100
				6	2	28.5	255.0	28.0	85.0	92.1	5	600	110
	L	460-3-60	414/506	1,2,3	2	13.5	123.0	6.5	33.5	36.9	5	600	50
				6	2	13.5	123.0	18.8	45.8	50.5	5	600	60
	M	575-3-60	518/633	1,2,3	2	10.7	93.7	5.2	26.6	29.3	5	600	35
SB300	K	208/230-3-60	187/253	6	2	40.8	270.0	22.3	103.9	114.1	5	600	150
	L	460-3-60	414/506	6	2	19.4	147.0	22.1	60.9	66.4	5	600	80

Models:
SB
072-300

Electrical Data: Dual Point Power

Model	Voltage Code	Voltage	Min/Max Voltage	Blower Option	Compressor Power Supply								Fan Power Supply				
					Qty	RLA	LRA	Rated Current Amps	Min Circuit Amps	SCCR kA RMS Symmetrical	SCCR Volts Max	Max Fuse HACR Amps	Fan Motor FLA	Min Circuit Amps	SCCR kA RMS Symmetrical	SCCR Volts Max	Max Fuse HACR Amps
SB072	K	208/230-3-60	187/253	A,B,C	2	12.2	97.5	24.4	27.5	5	600	35	3.0	3.8	5	600	15
				D,E	2	12.2	97.5	24.4	27.5	5	600	35	5.8	7.3	5	600	15
				F	2	12.2	97.5	24.4	27.5	5	600	35	5.2	6.4	5	600	15
	L	460-3-60	414/506	A,B,C	2	5.8	44.3	11.6	13.1	5	600	15	1.4	1.8	5	600	15
				D,E	2	5.8	44.3	11.6	13.1	5	600	15	2.9	3.6	5	600	15
				F	2	5.8	44.3	11.6	13.1	5	600	15	6.9	8.6	5	600	15
	M	575-3-60	518/633	A,B,C	2	4.5	27.1	9.0	10.1	5	600	15	1.2	1.5	5	600	15
				D,E	2	4.5	27.1	9.0	10.1	5	600	15	2.2	2.8	5	600	15
SB096	K	208/230-3-60	187/253	A,B,C	2	12.8	120.4	25.6	28.8	5	600	40	5.8	7.3	5	600	15
				D,E	2	12.8	120.4	25.6	28.8	5	600	40	8.2	10.3	5	600	15
				F	2	12.8	120.4	25.6	28.8	5	600	40	9.3	11.6	5	600	20
	L	460-3-60	414/506	A,B,C	2	6.0	49.4	12.0	13.5	5	600	15	2.9	3.6	5	600	15
				D,E	2	6.0	49.4	12.0	13.5	5	600	15	4.1	5.1	5	600	15
				F	2	6.0	49.4	12.0	13.5	5	600	15	9.6	12.0	5	600	20
	M	575-3-60	518/633	A,B,C	2	5.8	41	11.6	13.1	5	600	15	2.2	2.8	5	600	15
				D,E	2	5.8	41	11.6	13.1	5	600	15	3.2	4.0	5	600	15
SB120	K	208/230-3-60	187/253	A,B,C	2	18.6	155	37.2	41.9	5	600	60	8.2	10.3	5	600	15
				D,E	2	18.6	155	37.2	41.9	5	600	60	14.0	17.5	5	600	30
				F	2	18.6	155	37.2	41.9	5	600	60	11.0	13.7	5	600	20
	L	460-3-60	414/506	A,B,C	2	8.3	58.1	16.6	18.7	5	600	25	4.1	5.1	5	600	15
				D,E	2	8.3	58.1	16.6	18.7	5	600	25	6.5	8.1	5	600	15
				F	2	8.3	58.1	16.6	18.7	5	600	25	13.6	17.0	5	600	30
	M	575-3-60	518/633	A,B,C	2	7.7	47.8	15.4	17.3	5	600	25	3.2	4.0	5	600	15
				D,E	2	7.7	47.8	15.4	17.3	5	600	25	5.2	6.5	5	600	15

Table continued on next page.

Electrical Data: Dual Point Power

Models:
SB
072-300

Table continued from previous page.

Model	Voltage Code	Voltage	Min/Max Voltage	Blower Option	Compressor Power Supply								Fan Power Supply				
					Qty	RLA	LRA	Rated Current Amps	Min Circuit Amps	SCCR kA RMS Symmetrical	SCCR Volts Max	Max Fuse HACR Amps	Fan Motor FLA	Min Circuit Amps	SCCR kA RMS Symmetrical	SCCR Volts Max	Max Fuse HACR Amps
SB168	K	208/230-3-60	187/253	A,B,C	2	24.4	200	48.8	54.9	5	600	70	8.2	10.3	5	600	15
				D,E	2	24.4	200	48.8	54.9	5	600	70	14.0	17.5	5	600	30
				F	2	24.4	200	48.8	54.9	5	600	70	8.9	11.1	5	600	15
	L	460-3-60	414/506	A,B,C	2	11.9	103	23.8	26.8	5	600	35	4.1	5.1	5	600	15
				D,E	2	11.9	103	23.8	26.8	5	600	35	6.5	8.1	5	600	15
				F	2	11.9	103	23.8	26.8	5	600	35	13.6	17.0	5	600	30
	M	575-3-60	518/633	A,B,C	2	9.4	78	18.8	21.2	5	600	30	3.2	4.0	5	600	15
				D,E	2	9.4	78	18.8	21.2	5	600	30	5.2	6.5	5	600	15
SB192	K	208/230-3-60	187/253	A,B,C	2	27.7	178.5	55.4	62.3	5	600	90	8.2	10.3	5	600	15
				D,E	2	27.7	178.5	55.4	62.3	5	600	90	14.0	17.5	5	600	30
				F	2	27.7	178.5	55.4	62.3	5	600	90	14.6	18.3	5	600	30
	L	460-3-60	414/506	A,B,C	2	11.5	103	23.0	25.9	5	600	35	4.1	5.1	5	600	15
				D,E	2	11.5	103	23.0	25.9	5	600	35	6.5	8.1	5	600	15
				F	2	11.5	103	23.0	25.9	5	600	35	13.6	17.0	5	600	30
	M	575-3-60	518/633	A,B,C	2	9.0	78	18.0	20.3	5	600	25	3.2	4.0	5	600	15
				D,E	2	9.0	78	18.0	20.3	5	600	25	5.2	6.5	5	600	15
SB240	K	208/230-3-60	187/253	A,B,C	2	28.5	255	57.0	64.1	5	600	90	14.0	17.5	5	600	30
				F	2	28.5	255	57.0	64.1	5	600	90	28.0	35.0	5	600	60
	L	460-3-60	414/506	A,B,C	2	13.5	123	27.0	30.4	5	600	40	6.5	8.1	5	600	15
				F	2	13.5	123	27.0	30.4	5	600	40	18.8	23.5	5	600	40
	M	575-3-60	518/633	A,B,C	2	10.7	93.7	21.4	24.1	5	600	30	5.2	6.5	5	600	15
SB300	K	208/230-3-60	187/253	F	2	40.8	270	81.6	91.8	5	600	125	22.3	27.9	5	600	50
	L	460-3-60	414/506	F	2	19.4	147	38.8	43.7	5	600	60	22.1	27.6	5	600	45

Models:
SB
072-300

Electrical: Power and Low-Voltage Wiring

ELECTRICAL

Line Voltage - All field installed wiring, including electrical ground, must comply with NFPA 70: National Electrical Code (NEC), CSA C22.1: Canadian Electrical Code (CE Code), as well as applicable local codes. Refer to the unit electrical data for fuse sizes. Consult wiring diagram for field connections that must be made by the installing (or electrical) contractor. All final electrical connections must be made with a length of flexible conduit to minimize vibration and sound transmission to the building.

GENERAL LINE-VOLTAGE WIRING

Be sure the available power is the same voltage and phase shown on the unit serial plate.
Line- and low-voltage wiring must be done in accordance with local codes or the National Electric Code, whichever is applicable.

TRANSFORMER

All 208/230V units are factory wired for 208V.
If supply voltage is 230V, installer must rewire transformer. See wire diagram for connections.

DISCONNECT

Units with a factory-installed disconnect switch will provide full separation of all poles and disconnection from main line voltage. For units where factory disconnect is not selected as an option, the installer must incorporate the means to fully disconnect the line voltage in the fixed wiring in accordance with wiring rules and local electrical codes.

LOW WATER-TEMPERATURE CUTOUT SELECTION

The CXM2 allows the field selection of low-water (or water-antifreeze solution) temperature limit by clipping jumper JW3, which changes the sensing temperature associated with thermistor LT1. Note that the LT1 thermistor is located on the refrigerant line between the coaxial heat exchanger and expansion device (TXV or cap tube). Therefore, LT1 is sensing refrigerant temperature, not water temperature, which is a better indication of how water flow rate/ temperature is affecting the refrigeration circuit.

Figure 11: LT1 Limit Setting

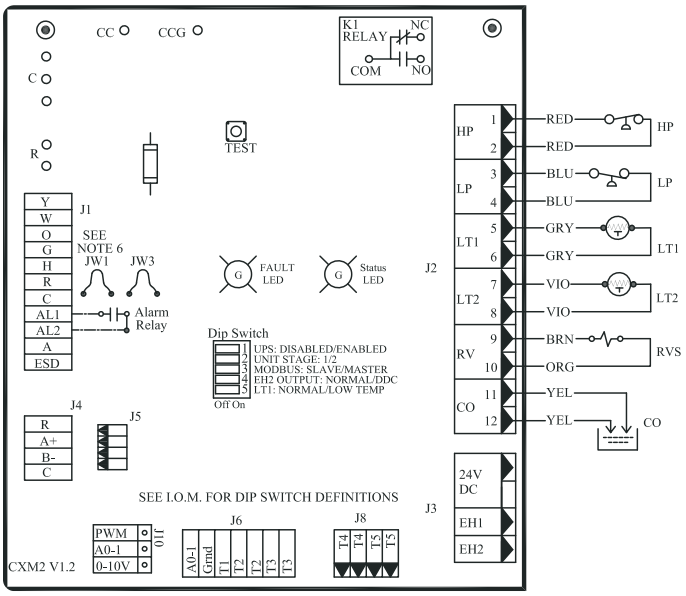

The factory setting for LT1 is for systems using water (30°F [-1.1°C] refrigerant temperature). In low water temperature (extended range) applications with antifreeze (most ground loops), jumper JW3 should be clipped as shown in the figure below to change the setting to 10°F (-12.2°C) refrigerant temperature, a more suitable temperature when using an antifreeze solution. All SB units operating with entering water temperatures below 59°F (15°C) must include the optional water/refrigerant circuit insulation package to prevent internal condensation.

Figure 12: SB Horizontal Control Box (Representative)

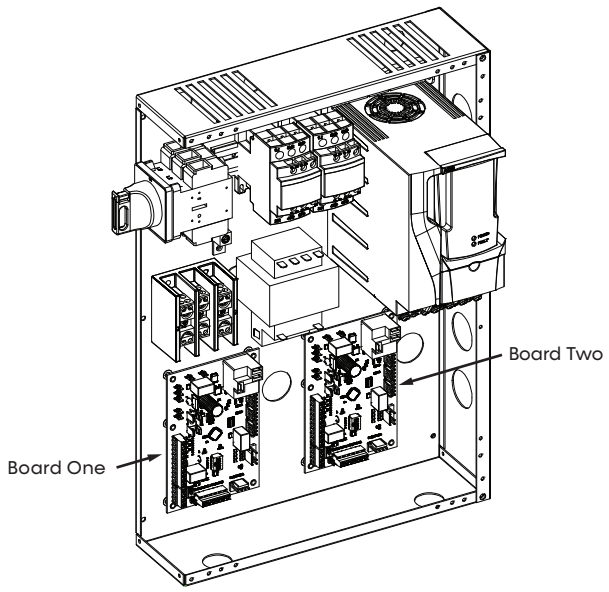

Electrical: CXM2 Example Wiring Diagram

Models:
SB
072-300

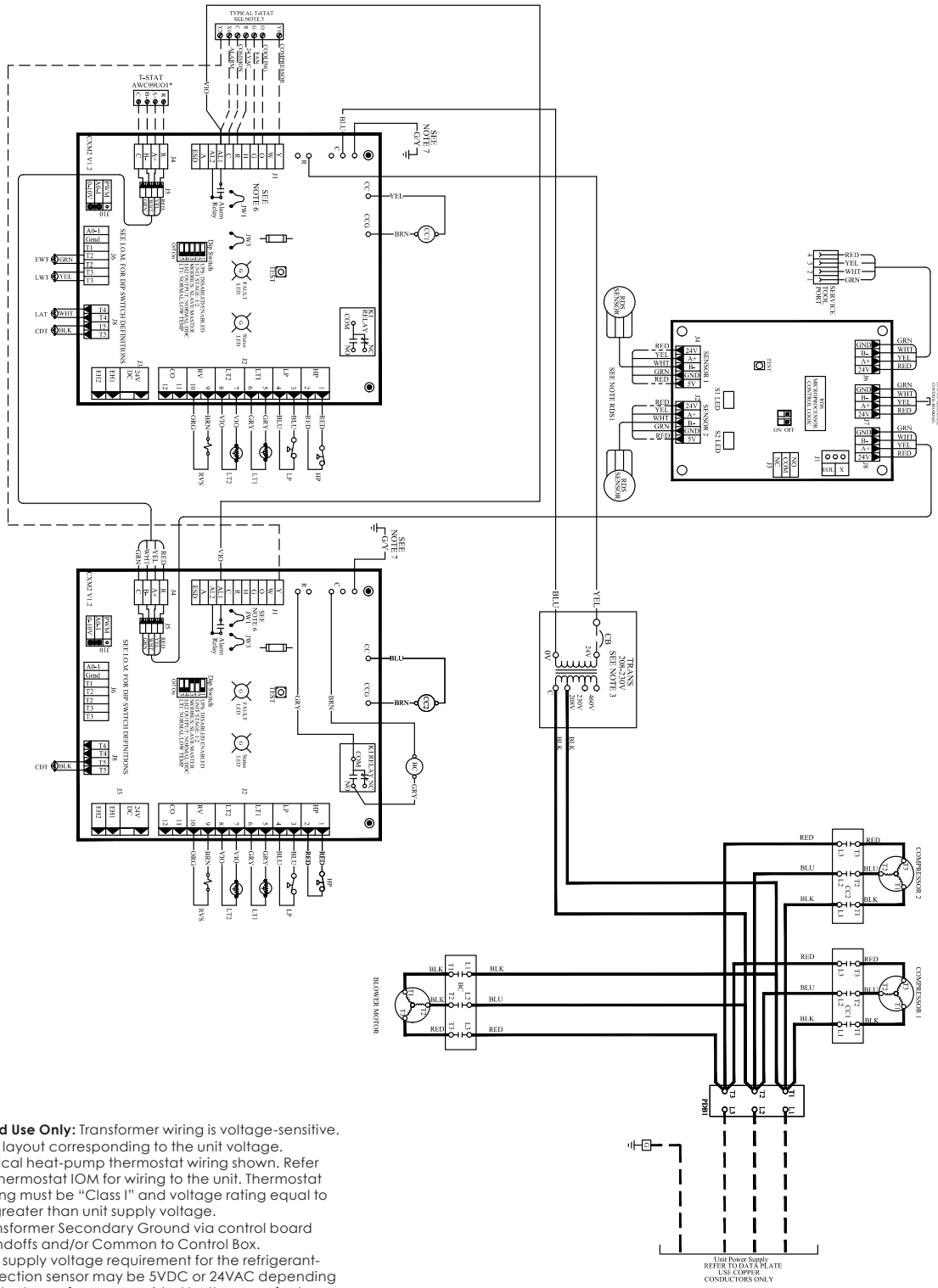

NOTES:

1. **Field Use Only:** Transformer wiring is voltage-sensitive. Use layout corresponding to the unit voltage.
2. Typical heat-pump thermostat wiring shown. Refer to thermostat IOM for wiring to the unit. Thermostat wiring must be "Class I" and voltage rating equal to or greater than unit supply voltage.
3. Transformer Secondary Ground via control board standoffs and/or Common to Control Box.
4. The supply voltage requirement for the refrigerant-detection sensor may be 5VDC or 24VAC depending on the type of sensor provided by the manufacturer.

Models:
SB
072-300

Electrical: Low-Voltage Wiring

MODELS WITH WATERSIDE ECONOMIZER

Controller is factory assembled. Factory settings are 45°F (7.2°C), valve opens, closes at 55°F (12.8°C), and 5 minute short cycle delay. Settings are adjustable.

ACCESSORY CONNECTIONS

A terminal paralleling the compressor contactor coil has been provided on the CXM2. Terminal "A" is designed to control accessory devices, such as water valves. **NOTE: This terminal should be used only with 24V signals and not line voltage.** Terminal "A" is energized with the compressor contactor. See the specific unit wiring diagram for details.

Table 5: Low Voltage VA Ratings

Component	VA
Typical Blower Relay	6 - 7
Typical Reversing Valve Solenoid	4 - 6
30 A Compressor Contactor	6 - 9
Subtotal	16 - 22
+ CXM2 (5 - 9VA)*	21 - 31
Remaining VA for Accessories	19 - 29

*Standard transformer for SB units is 100VA.

Figure 13: Accessory Wiring

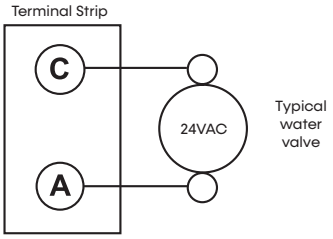

⚠ CAUTION

Many units are installed with a factory or field-supplied manual or electric shut-off valve. DAMAGE WILL OCCUR if shut-off valve is closed during unit operation. A high-pressure switch must be installed on the heat-pump side of any field provided shut-off valves and connected to the heat-pump controls in series with the built-in refrigerant circuit high-pressure switch to disable compressor operation if water pressure exceeds pressure switch setting. The field-installed high-pressure switch shall have a cut-out pressure of 300 psig and a cut-in pressure of 250 psig. This pressure switch can be ordered from ClimateMaster with a ¼-inch internal flare connection as part number 39B0005N02.

WATER SOLENOID VALVES

An external solenoid valve(s) should be used on ground water installations to shut off flow to the unit when the compressor is not operating. A slow closing valve may be required to help reduce water hammer. Figure 13 shows typical wiring for a 24VAC external solenoid valve. Figure 14 illustrates a slow-closing water control valve wiring for a style of typical accessory water valve. Slow-closing valves take approximately 60 seconds to open (very little water flows before 45 seconds). Once fully open, an end switch allows the compressor to be energized. Only relay or triac based electronic thermostats should be used with slow-closing valves. When wired as shown, the slow-closing valve operate properly with the following notations:

1. The valve will remain open during a unit lockout.
2. The valve will draw approximately 25-35VA through the "Y" signal of the thermostat.

NOTE: This valve can overheat the anticipator of an electromechanical thermostat. Therefore, only relay or triac based thermostats should be used.

Figure 14: Optional Motorized Water Valve Wiring

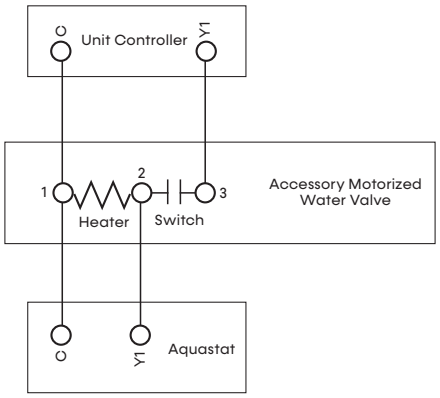

THERMOSTAT CONNECTIONS

The thermostat should be wired directly to the CXM2. See "Electrical: Thermostat Wiring" (Figure 17) for specific terminal connections. Review the appropriate AOM (Application, Operation and Maintenance) manual for units with DDC controls.

Electrical: Low-Voltage Wiring

Models:
SB
072-300

REFRIGERANT DETECTION SYSTEM (RDS)

The function, operation, and required servicing measures for the Refrigerant Detection System (RDS) include the following:

- The RDS monitors the status of the refrigerant sensor(s) in the unit. If refrigerant is detected above the maximum threshold, the control enables the unit blower, disables the compressor(s), and enables the pilot relay on the RDS control board. You can use this relay to open external zoning dampers and/or activate external mechanical ventilation. The relay is normally closed (NC) and can control a signal with a maximum of 28VA @ 24VAC.
- A fault is enabled if the RDS control board loses communication with a refrigerant sensor or if the main control board loses communication with the RDS board. See Functional Troubleshooting for steps to troubleshoot the RDS.
- The End of Line (EoL) termination is used to prevent signal reflection issues in the communication network. When the EoL termination is enabled, it places a resistor at the end of the communication line, ensuring proper signal integrity and reducing potential communication errors. Add the EoL termination resistor when the RDS board is the end of a daisy-chain, and the total length of the wire is greater than 50 feet.

Figure 15: RDS Board

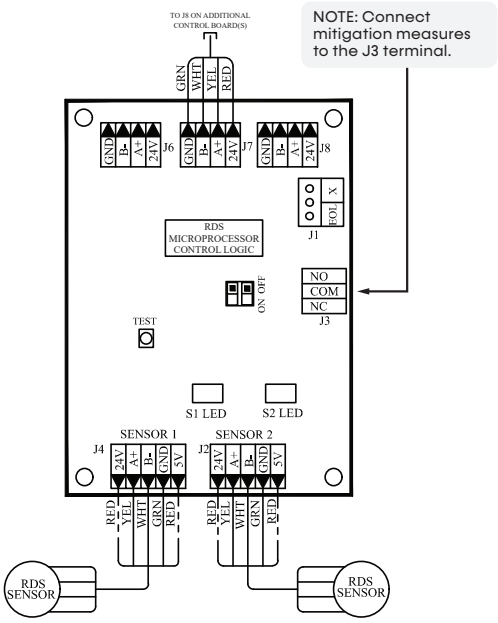

RDS SENSOR PLACEMENT

Use the following guidelines to maintain the installation and placement of the field-installed refrigerant detection sensor upstream of the unit's return-air inlet:

1. The sensor must be located within 3 inches of the unit
2. The sensor must be on the same plane or lower than the unit
3. The sensor must be on the same side of the coil as the feeder tubes (feeder tubes are located near the electrical components)

⚠ NOTICE

The sensor cannot be installed in a way that exposes it to water and must be installed using the orientation displayed in the figure below.

Figure 16: Sensor Placement

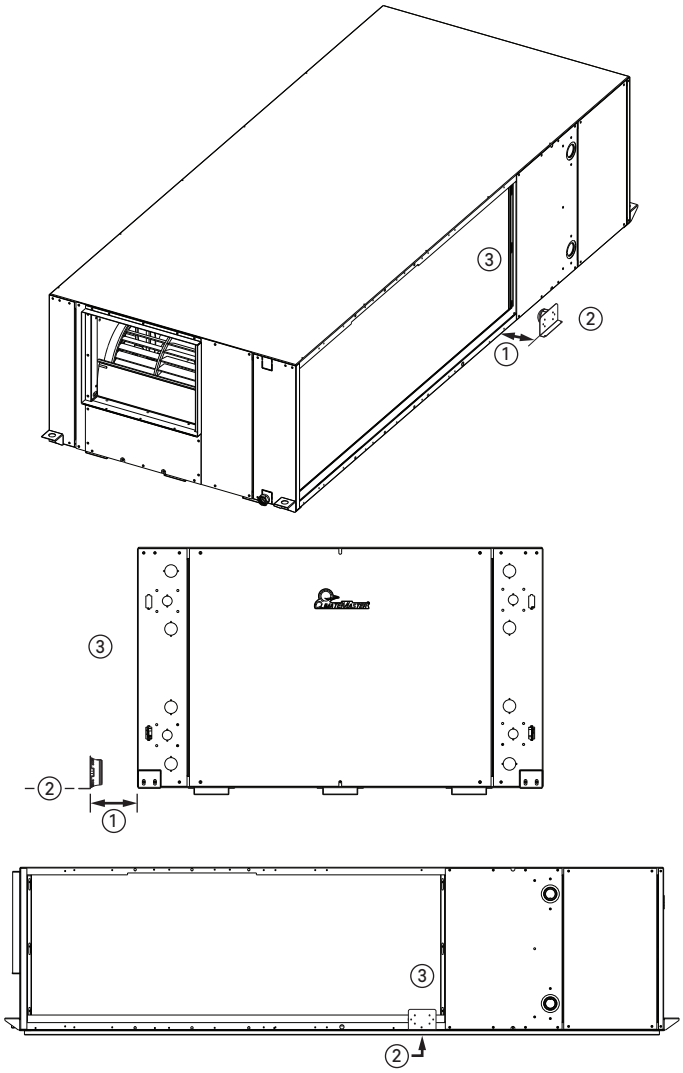

Models:
SB
072-300

Electrical: Thermostat Wiring

THERMOSTAT INSTALLATION

The thermostat should be located on an interior wall in a larger room, away from supply duct drafts. DO NOT locate the thermostat in areas subject to sunlight, drafts or on external walls. The wire access hole behind the thermostat may in certain cases need to be sealed to prevent erroneous temperature measurement.

Position the thermostat back plate against the wall so that it appears level and so the thermostat wires protrude through the middle of the back plate.

Mark the position of the back plate mounting holes and drill holes with a 3⁄16-inch (5-mm) bit. Install supplied anchors and secure plate to the wall. Thermostat wire must be 18 AWG wire. Wire the appropriate thermostat as shown in the figure below to the low voltage terminal strip on the CXM2. Practically any heat pump thermostat will work with ClimateMaster units, provided it has the correct number of heating and cooling stages.

Figure 17: Thermostat Connection

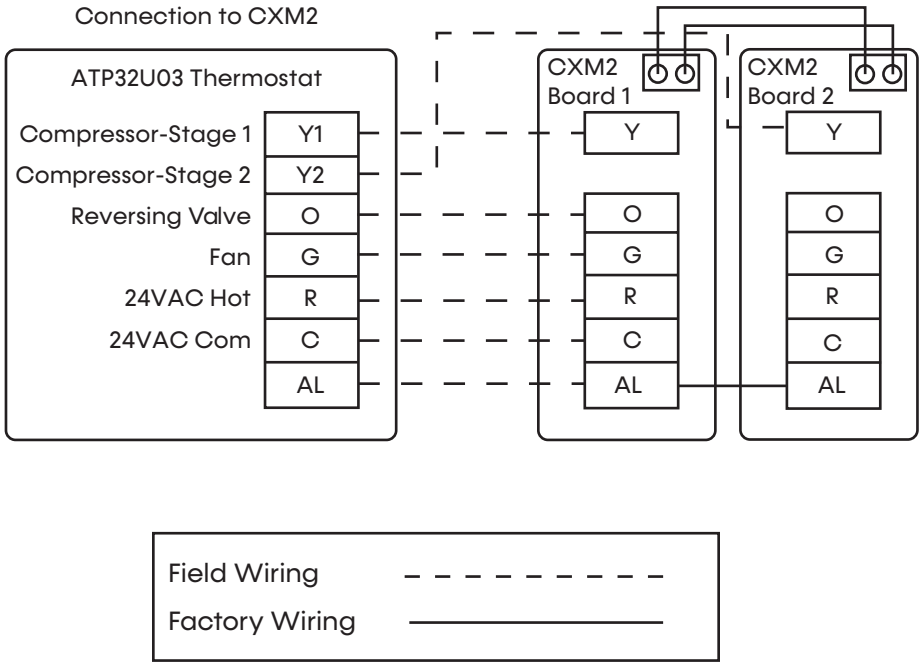

Electrical: External Pump Control

Models:
SB
072-300

Figure 18: External Pump Control Diagram

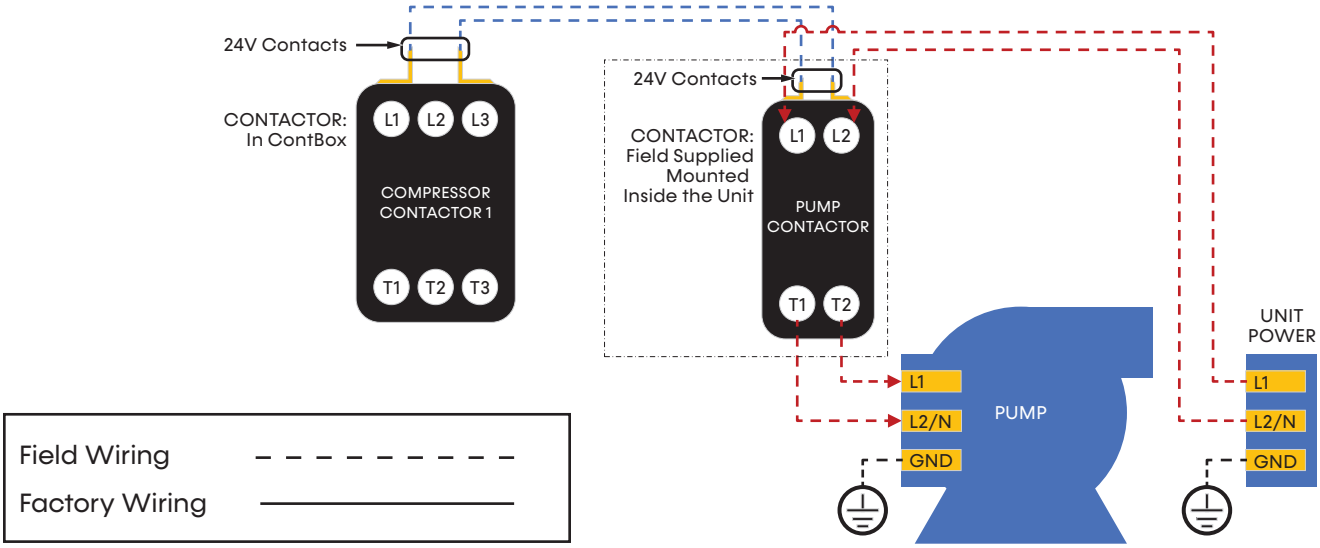

Figure 19: External Pump Control with VFD Diagram

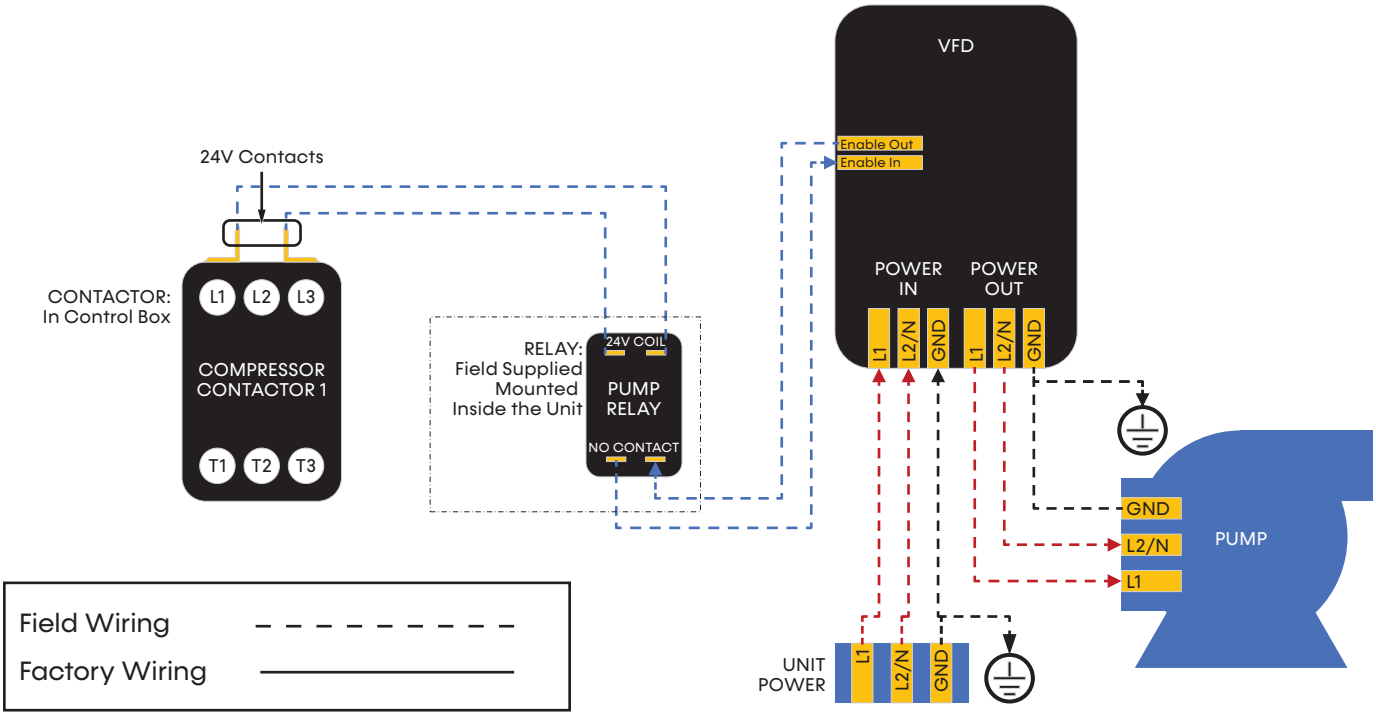

Models:
SB
072-300

Controls: CXM2 Communicating Controls

CXM2 Communicating Controls

For detailed controller information, see the CXM2 Application, Operation, and Maintenance (AOM) manual (part # 97B0137N01). To confirm the controller type of your particular unit, refer to digit 9 on the unit model number and the unit nomenclature diagram found on page 3 of this manual.

Blower Adjustment

Models:
SB
072-300

⚠ CAUTION

Always disconnect all power supply(s) to unit prior to making belt or sheave adjustments. Inadvertently starting of the motor can cause damage to the equipment and personal injury.

AIRFLOW AND EXTERNAL STATIC PRESSURE

Selection Adjustment

The SB Series is available with standard, low, and high static options. These options will substitute a different blower drive sheave for each static range. In addition certain static ranges (see blower tables) may require the optional large fan motor. Please specify static range and motor horsepower when ordering. See model nomenclature.

Sheave Adjustment

The SB Series is supplied with variable sheave drive on the fan motor to adjust for differing airflows at various ESP conditions. Select an airflow requirement on the left side of the table, then move horizontally to right under the required ESP. Contractor is responsible for balancing airflow, and maintaining static in duct as needed. Sheaves can be adjusted through the outlined static range at the selected airflows. Fully closed, the sheave will produce the highest static capability (higher rpm). To adjust sheave position: loosen belt tension and remove belt, loosen set screw on variable sheave (on fan motor) and open sheave to desired position. Re-tighten set screw and replace belt and set belt tension as below.

Sheave and Pulley Alignment

Verify belt is straight; misalignment will cause premature belt failure. Adjust sheave if needed.

Belt Tensioning

An overly loose belt will, upon motor start, produce a slippage 'squeel' and cause premature belt failure and or intermittent airflow. An overly-tight belt can cause premature belt, motor, or blower bearing failure.

Use the following steps to ensure proper belt tensioning:

1. Remove belt from motor sheave
2. Lift motor assembly
3. Loosen the 5⁄16-inch hex nuts on the grommet motor adjustment bolts (two per bolt). To increase the belt tension loosen the top hex nut. To decrease the belt tension loosen the bottom hex nut.
4. Turn the bolts by hand to the desired position then tighten the 5⁄16-inch hex nuts (two per bolt).
5. Lower the motor assembly
6. Install the belt
7. The belt should be tensioned with a tensioning gauge method such as the Browning Belt Tensioner to set proper belt tension (See next page).

NOTES:

- **Motor position should not need adjustment.**
- **Motor sheave position is at mid position of each sheave. Thus the motor sheave is typically 2.5 turns open on a 5-turn sheave.**

Special Note for AHRI Testing

The Units should be adjusted as follows for rated airflow:

- SB072 - 2400cfm/2.5 turns and 0.57 in wg ESP
- SB096 - 3200cfm/3.0 turns and 0.62 in wg ESP
- SB120 - 4000cfm/3.0 turns and 0.59 in wg ESP

Models:
SB
072-300

VFD Operation

SINGLE ZONE VARIABLE AIR VOLUME (VAV)

Products with option "6" or "F" in the 14th digit of the model number come with a variable frequency drive (VFD) and are intended to be applied in single zone VAV applications. SB units use two CXM2 in a dual-board configuration. The VFD is controlled by board 2. The VFD receives a modulating 0-10 VDC signal from the CXM2, and varies the output frequency directly proportionally to the input signal. With 60 Hz frequency, a signal of 10 VDC will result in a 60 Hz frequency to the motor and 100% fan speed. If the signal is 5 VDC, the VFD output will be will be 30 Hz (50% fan speed).

VFD BLOWER OPERATION

If the CXM2 is configured for VFD blower operation, the CXM2 will control an external VFD using a 0–10 VDC control signal on AO1, and will default to the LAT control mode.

NOTE: VFD output is 50% of last value during heating or cooling blower off delay times.

The actual operating range for the VFD when the blower should be active will be 2–10 VDC associated to the operating speed of 0–100%. When the VFD should be off, the output should be set to 0 VDC.

For each unit size, there will be a maximum and minimum operating speed that the VFD can be operated at for any mode, defined in Table 6.

The VFD blower may be operated in discrete speed or LAT control modes. If configured for discrete speed operation, the VFD speed will be operated using one of the three set operating speeds for each unit size, defined Table 6. If configured for LAT operation, the VFD speed will be controlled by the CXM2 to achieve or maintain the selected target LAT value for the current operating mode.

DISCRETE SPEED VFD OPERATION

When the CXM2 is configured for discrete-speed VFD operation, the VFD speed will be set to the selected operating speed (A, B or C) for full-load heating or cooling. Full-load operation is defined as the second stage enabled in either heating or cooling. The possible discrete operating speeds for each unit size are defined in Table 6.

When the CXM2 is configured for discrete-speed VFD operation, the VFD operating speed may be increased or decreased by 10%. The speed offset option defaults to normal (no offset). To increase the VFD operating speed by 10%, set the speed offset option to Increase. To decrease the VFD operating speed by 10%, set the speed offset option decrease.

When operating in first-stage heating or cooling, the VFD speed will be set to the percentage multiplier of the selected full-load operating speed (A, B or C, plus or minus adjustment) listed for each unit size as defined in Table 6.

LAT CONTROL VFD OPERATION

When the CXM2 is configured for LAT control operation, the VFD speed will be controlled by the CXM2 to maintain the selected target LAT for heating or cooling operation.

When a compressor demand is recognized, the VFD output will be set to the most recent operating speed of the VFD in the current operating mode (heating or cooling). If there is no value stored from a previous heating or cooling cycle, the VFD speed will initially be set to 75% or 8.0 VDC. After the VFD speed is initially set, the VFD control signal will not be adjusted until after 90 seconds of compressor operation, and then will be periodically checked and adjusted every 10 seconds if needed to maintain the LAT.

VFD Operation

Models:
SB
072-300

If the control switches from the heating mode to cooling, or cooling to heating without de-activating the compressor, the VFD control voltage will immediately switch to the last stored control voltage for the new operating mode, and then will not be adjusted for the first 90 seconds of operation in the new operating mode.

The VFD control voltage is increased or decreased incrementally based on the magnitude of the differential between the current LAT and the target LAT, using the following:

LAT differential |Actual – Target|	VFD adjust (VDC)
$\Delta T \leq 1.0°F$	0.0
$1.0 < \Delta T \leq 2.0°F$	0.1
$2.0 < \Delta T \leq 3.0°F$	0.2
$3.0 < \Delta T \leq 5.0°F$	0.3
$\Delta T > 5.0°F$	0.4

The VFD control voltage is increased or decreased based on both the operating mode and whether the current LAT is above or below the target LAT, using the following:

Operating mode	LAT differential (Actual – Target)	VFD voltage adjustment
Heat	Above	Increase
	Below	Decrease
Cool	Above	Decrease
	Below	Increase

NOTE: Blower speed is directly proportional to VFD output frequency and voltage

When the control stages from first to second stage operation, the output voltage signal will be immediately increased by 25% of the current value, not to exceed the maximum speed (voltage) for the selected heat pump family and size. The blower speed will not be adjusted further for 90 seconds after transition from first to second stage operation.

When making VFD speed adjustments for LAT control, the VFD speed should never go above the maximum speed (voltage) or below the minimum speed (voltage), for the selected heat pump family and size.

CONTINUOUS FAN VFD OPERATION

When the CXM2 is configured for VFD blower operation, the continuous fan operating speed will be a selectable value. The default continuous fan operating speeds (default fan speeds) are shown in Table 6, along with the minimum and maximum operating speed values.

NOTE: In VFD operation (Blower Type = 128), the VFD enable signal is triggered by the K1 relay. A01 output voltage for continuous fan operation will change to a percentage for the selected blower speed from the values presented in Table 6 or for full load airflow needs.

Models:
SB
072-300

VFD Operation

Table 6: VFD Control Values

Model	Minimum VFD Speed	Maximum VFD Speed	VFD Fixed Speed A	VFD Fixed Speed B	VFD Fixed Speed C	Part Load Multiplier	Default Fan Speed
SB072	3.7	10.0	7.4	6.2	9.0	71%	5.2
SB096	3.8	10.0	7.0	6.0	9.0	75%	5.0
SB120	4.2	10.0	8.0	7.0	9.0	70%	6.0
SB168	4.1	10.0	7.9	6.4	9.0	76%	5.4
SB192	4.4	10.0	8.0	7.0	9.0	73%	6.0
SB240	4.2	10.0	8.0	7.0	9.0	70%	6.0
SB300	5.0	10.0	8.0	8.0	9.5	71%	7.0

Table 7: Operating Temperatures

Model	Minimum Heat LAT	Maximum Heat LAT	Default Heat LAT	Minimum Cool LAT	Maximum Cool LAT	Default Cool LAT
SB072	85°	125°	105°	45°	65°	55°
SB096	85°	125°	105°	45°	65°	55°
SB120	85°	125°	105°	45°	65°	55°
SB168	85°	125°	105°	45°	65°	55°
SB192	85°	125°	105°	45°	65°	55°
SB240	85°	125°	105°	45°	65°	55°
SB300	85°	125°	105°	45°	65°	55°

ADVANCED CONTROL ALGORITHM

Option: The CXM2 is a communicating controller which also features two-stage control of cooling and two-stage control of heating modes for exacting temperature and dehumidification purposes. This control system coupled with a multi-stage thermostat will better dehumidify room air by automatically running the heat pump's fan at lower speed on the first stage of cooling thereby implementing low sensible-heat-ratio cooling.

When higher cooling performance is needed, the system will activate the second stage of cooling and automatically switch the fan to the higher fan speed setting.

When CXM2 is connected to either ACDU service tool or AWC thermostat the installer/service technician can check and set CFM, toggle between discrete and LAT modes, select fixed fan speed, or LAT set point.

Tensioning V-Belt Drives

Models:
SB
072-300

GENERAL RULES OF TENSIONING

1. Ideal tension is the lowest tension at which the belt will not slip under peak load conditions.
2. Check tension frequently during the first 24-48 hours of operation.
3. Over tensioning shortens belt and bearing life.
4. Keep belts free from foreign material which may cause slip.
5. Inspect the V-drive on a periodic basis. Tension when slipping. Never apply belt dressing as this will damage the belt and cause early failure.

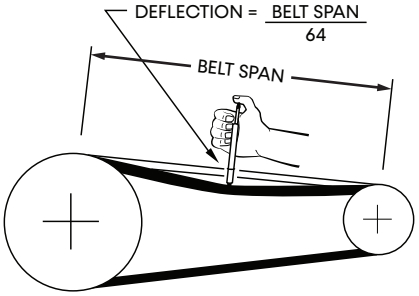

TENSION MEASUREMENT PROCEDURE

6. Measure the belt span (see sketch).
7. Position bottom of the large "O" ring on the span scale at the measured belt span.
8. Set the small "O" ring on the deflection force scale to zero.
9. Place the tension checker squarely on one belt at the center of the belt span. Apply a force on the plunger and perpendicular to the belt span until the bottom of the large "O" ring is even with the top of the next belt or with the bottom of a straight edge laid across the sheaves.
10. Remove the tension checker and read the force applied from the bottom of the small "O" ring on the deflection force scale.

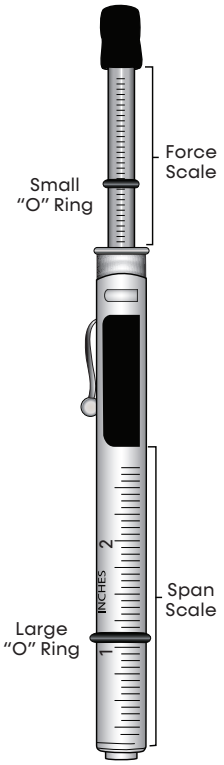

11. Compare the force you have applied with the values given in the table below. The force should be between the minimum and maximum shown. The maximum value is shown for "New Belt" and new belts should be tensioned at this value to allow for expected tension loss. Used belts should be maintained at the minimum value as indicated in the table below.

NOTE: The ratio of deflection to belt span is 1:64.

Cross Section	Smallest Sheave Diameter Range	RPM Range	Belt Deflection Force			
			Super Gripbelts and Unnotched Gripbands		Gripnotch Belts and Notched Gripbands	
			Used Belt	New Belt	Used Belt	New Belt
A, AX	7.6 - 9.1	1000 - 2500	16.458	24.464	18.237	27.133
		2501 - 4000	12.454	18.682	15.123	22.240
	9.6 - 12.2	1000 - 2500	20.016	30.246	22.240	32.915
		2501 - 4000	16.902	25.354	19.126	28.467
	12.7 - 17.8	1000 - 2500	24.019	35.584	25.354	41.811
		2501 - 4000	20.906	31.136	22.685	33.805
B, BX	8.6 - 10.7	860 - 2500	-	-	21.795	32.026
		2501 - 4000	-	-	18.682	27.578
	11.2 - 14.2	860 - 2500	23.574	35.139	36.029	46.704
		2501 - 4000	20.016	29.802	31.581	40.477
	14.7 - 21.8	860 - 2500	28.022	41.811	37.808	56.045
		2501 - 4000	26.688	39.587	32.470	48.483

Models:
SB
072-300

Blower Sheave Information

Horizontal

Model Size	Drive Package	Sheave			Belt
		Motor	Blower	Bushing	
72	1,A	1VP34 X 7/8 B	BK67 X 1 B	-	V-BELT BX47
	2,B	1VP34 X 7/8 B	BK85 X 1 B	-	V-BELT BX50
	3.C	1VP44 X 7/8 B	BK67 X 1 B	-	V-BELT BX48
	4,D	1VP34 X 7/8 B	BK67 X 1 B	-	V-BELT BX47
	5,6,E,F	1VP44 X 7/8 B	BK67 X 1 B	-	V-BELT BX48
96	1,A	1VP40 X 7/8 B	BK67 X 1 B	-	V-BELT BX47
	2,B	1VP34 X 7/8 B	BK77 X 1 B	-	V-BELT BX48
	3.C	1VP44 X 7/8 B	BK62H	-	V-BELT BX47
	4,D	1VP40 X 7/8 B	BK67 X 1 B	-	V-BELT B49
	5,6,E,F	1VP44 X 7/8 B	BK62H	-	V-BELT B49
120	1,A	1VP44 X 7/8 B	BK67 X 1 B	-	V-BELT BX50
	2,B	1VP34 X 7/8 B	BK67 X 1 B	-	V-BELT B49
	3.C	1VP50 X 7/8 B	BK67 X 1 B	-	V-BELT BX51
	4,D	1VP44 X 1-1/8	BK67 X 1 B	-	V-BELT BX50
	5,6,E,F	1VP50 X 1-1/8 B	BK67 X 1 B	-	V-BELT BX51

Vertical

Model Size	Drive Package	Sheave			Belt
		Motor	Blower	Bushing	
72	1,A	1VP34 X 7/8 B	BK67 X 1 B	-	V-BELT BX56
	2,B	1VP34 X 7/8 B	BK85 X 1 B	-	V-BELT BX59
	3.C	1VP44 X 7/8 B	BK67 X 1 B	-	V-BELT BX57
	4,D	1VP34 X 7/8 B	BK67 X 1 B	-	V-BELT BX56
	5,6,E,F	1VP44 X 7/8 B	BK67 X 1 B	-	V-BELT BX57
96	1,A	1VP40 X 7/8 B	BK67 X 1 B	-	V-BELT BX56
	2,B	1VP34 X 7/8 B	BK77 X 1 B	-	V-BELT BX57
	3.C	1VP44 X 7/8 B	BK62H	-	V-BELT BX56
	4,D	1VP40 X 7/8 B	BK67 X 1 B	-	V-BELT BX54
	5,6,E,F	1VP44 X 7/8 B	BK62H	-	V-BELT BX54
120	1,A	1VP44 X 7/8 B	BK67 X 1 B	-	V-BELT BX55
	2,B	1VP34 X 7/8 B	BK67 X 1 B	-	V-BELT BX54
	3.C	1VP50 X 7/8 B	BK67 X 1 B	-	V-BELT BX56
	4,D	1VP44 X 1-1/8	BK67 X 1 B	-	V-BELT BX55
	5,6,E,F	1VP50 X 1-1/8 B	BK67 X 1 B	-	V-BELT BX56
168	1,A	1VP44 X 7/8 B	BK80H	H x 1-3.16	V-BELT BX51
	2,B	1VP40 X 7/8 B	BK80H	H x 1-3.16	V-BELT BX51
	3.C	1VP50 X 7/8 B	BK80H	H x 1-3.16	V-BELT BX52
	4,D	1VP44 X 1-1/8	BK80H	H x 1-3.16	V-BELT BX51
	5,6,E,F	1VP50 X 1-1/8 B	BK80H	H x 1-3.16	V-BELT BX52
192	1,A	1VP44 X 7/8 B	BK77H	H x 1-3.16	V-BELT BX51
	2,B	1VP44 X 7/8 B	BK95H	H x 1-3.16	V-BELT BX54
	3.C	1VP50 X 7/8 B	BK70H	H x 1-3.16	V-BELT BX51
	4,D	1VP44 X 1-1/8	BK77H	H x 1-3.16	V-BELT BX51
	5,6,E,F	1VP50 X 1-1/8 B	BK70H	H x 1-3.16	V-BELT BX51
240	1,A	1VP60 X 1-1/8 B	BK90H	H x 1-3.16	V-BELT BX55
	2,B	1VP50 X 1-1/8 B	BK90H	H x 1-3.16	V-BELT BX54
	3.C	1VP60 X 1-1/8 B	BK80H	H x 1-3.16	V-BELT BX53
	6,F	2VP60 X 1-3/8	2BK80H	H x 1-3.16	V-BELT BX52
300	6,F	2VP62 X 1-3/8	2BK80H	H x 1-3.16	V-BELT BX53

Blower Performance SB072

Models: SB 072-300

SCFM	ESP (in.w.c.)	0.00	0.10	0.20	0.30	0.40	0.50	0.60	0.70	0.80	0.90	1.00	1.10	1.20	1.30	1.40	1.50
1,800	BHP			0.28	0.32	0.35	0.39	0.42	0.45	0.48	0.52	0.56	0.60	0.64	0.69	0.72	0.76
	Sheave/Mtr			B	B	B	A	A	A	A	A	A	C	C	C	C	C
	RPM			599	645	690	735	775	815	850	885	910	940	965	995	1015	1040
1,900	BHP			0.31	0.36	0.40	0.44	0.49	0.53	2.50	0.62	0.65	0.69	0.73	0.76	0.80	0.84
	Sheave/Mtr			B	B	A	A	A	A	A	A	C	C	C	C	C	C
	RPM			604	655	695	740	780	820	855	890	920	950	980	1005	1030	1055
2,000	BHP		0.31	0.34	0.39	0.45	0.50	0.54	0.59	0.63	0.67	0.72	0.75	0.79	0.82	0.86	0.90
	Sheave/Mtr		B	B	B	A	A	A	A	A	A	C	C	C	C	C	C
	RPM		568	615	660	705	750	785	825	860	895	930	960	990	1015	1040	1065
2,100	BHP	0.33	0.38	0.42	0.46	0.50	0.54	0.59	0.65	0.70	0.74	0.78	0.81	0.85	0.89	0.94	0.98
	Sheave/Mtr	B	B	B	A	A	A	A	A	A	A	C	C	C	C	C	C
	RPM	531	583	630	670	715	755	795	835	875	905	940	970	1000	1025	1055	1080
2,200	BHP	0.37	0.40	0.45	0.49	0.55	0.60	0.65	0.70	0.75	0.79	0.83	0.87	0.92	0.96	1.00	1.04
	Sheave/Mtr	B	B	B	A	A	A	A	A	A	C	C	C	C	C	E	E
	RPM	552	599	645	685	730	770	810	850	885	915	950	980	1010	1040	1065	1090
2,300	BHP	0.42	0.47	0.51	0.56	0.60	0.65	0.70	0.75	0.80	0.84	0.89	0.94	1.00	1.05	1.10	1.16
	Sheave/Mtr	B	B	B	A	A	A	A	A	A	C	C	C	E	E	E	E
	RPM	573	620	660	705	745	785	820	860	895	925	960	990	1020	1050	1075	1105
2,400	BHP	0.48	0.52	0.57	0.61	0.66	0.72	0.78	0.83	0.87	0.92	0.97	1.02	1.07	1.13	1.19	1.25
	Sheave/Mtr	B	B	A	A	A	A	A	A	A	C	C	E	E	E	E	E
	RPM	604	645	690	730	765	805	845	880	910	945	975	1010	1035	1065	1095	1125
2,500	BHP	0.52	0.57	0.61	0.66	0.72	0.78	0.83	0.89	0.94	1.00	1.03	1.08	1.14	1.20	1.25	1.31
	Sheave/Mtr	B	B	A	A	A	A	A	A	C	E	E	E	E	E	E	E
	RPM	620	660	700	740	780	815	850	885	920	950	985	1015	1045	1075	1100	1130
2,600	BHP	0.56	0.61	0.66	0.70	0.76	0.82	0.88	0.93	0.98	1.04	1.08	1.14	1.20	1.26	1.32	1.37
	Sheave/Mtr	B	A	A	A	A	A	A	A	C	E	E	E	E	E	E	E
	RPM	635	675	715	750	790	825	860	895	925	960	990	1020	1050	1080	1110	1135
2,700	BHP	0.61	0.66	0.71	0.76	0.82	0.87	0.93	0.98	1.04	1.10	1.15	1.21	1.27	1.33	1.39	1.45
	Sheave/Mtr	B	A	A	A	A	A	A	A	E	E	E	E	E	E	E	E
	RPM	655	695	730	770	805	840	875	905	940	970	1000	1030	1060	1090	1120	1145
2,800	BHP	0.66	0.72	0.77	0.83	0.88	0.93	0.99	1.05	1.11	1.16	1.22	1.30	1.37	1.44	1.51	1.57
	Sheave/Mtr	B	A	A	A	A	A	A	D	E	E	E	E	E	E	E	E
	RPM	670	710	750	785	815	850	885	915	950	980	1010	1040	1070	1100	1130	1155
2,900	BHP	0.71	0.77	0.82	0.87	0.93	0.98	1.04	1.10	1.16	1.22	1.30	1.36	1.43	1.50	1.57	1.63
	Sheave/Mtr	A	A	A	A	A	A	D	E	E	E	E	E	E	E	E	E
	RPM	685	725	765	795	830	860	895	925	955	985	1020	1045	1075	1105	1135	1160
3,000	BHP	0.79	0.84	0.90	0.95	1.01	1.07	1.13	1.19	1.25	1.31	1.38	1.46	1.52	1.59	1.66	
	Sheave/Mtr	A	A	A	A	A	D	D	E	E	E	E	E	E	E	E	
	RPM	710	745	780	815	850	885	915	945	975	1005	1035	1065	1090	1120	1150	

Notes:
- A, 1 = Standard RPM/Standard Blower Motor
- E, 5 = High RPM/Large Blower Motor
- The maximum allowable altitude of installation for this product is 6,561 ft (2,000 m).

Models:
SB
072-300

Blower Performance
SB072 with VFD

SCFM	ESP (in.w.c.)	0.00	0.10	0.20	0.30	0.40	0.50	0.60	0.70	0.80	0.90	1.00	1.10	1.20	1.30	1.40	1.50
1,800	BHP			0.28	0.32	0.35	0.39	0.42	0.45	0.48	0.52	0.56	0.60	0.64	0.69	0.72	0.76
	Discrete Spd Setting			B	B	B	A	A	A	A	A	A	C	C	C	C	C
	RPM			599	645	690	735	775	815	850	885	910	940	965	995	1015	1040
1,900	BHP			0.31	0.36	0.40	0.44	0.49	0.53	2.50	0.62	0.65	0.69	0.73	0.76	0.80	0.84
	Discrete Spd Setting			B	B	A	A	A	A	A	A	C	C	C	C	C	C
	RPM			604	655	695	740	780	820	855	890	920	950	980	1005	1030	1055
2,000	BHP		0.31	0.34	0.39	0.45	0.50	0.54	0.59	0.63	0.67	0.72	0.75	0.79	0.82	0.86	0.90
	Discrete Spd Setting		B	B	B	A	A	A	A	A	A	C	C	C	C	C	C
	RPM		568	615	660	705	750	785	825	860	895	930	960	990	1015	1040	1065
2,100	BHP	0.33	0.38	0.42	0.46	0.50	0.54	0.59	0.65	0.70	0.74	0.78	0.81	0.85	0.89	0.94	0.98
	Discrete Spd Setting	B	B	B	A	A	A	A	A	A	A	C	C	C	C	C	C
	RPM	531	583	630	670	715	755	795	835	875	905	940	970	1000	1025	1055	1080
2,200	BHP	0.37	0.40	0.45	0.49	0.55	0.60	0.65	0.70	0.75	0.79	0.83	0.87	0.92	0.96	1.00	1.04
	Discrete Spd Setting	B	B	B	A	A	A	A	A	A	C	C	C	C	C	E	E
	RPM	552	599	645	685	730	770	810	850	885	915	950	980	1010	1040	1065	1090
2,300	BHP	0.42	0.47	0.51	0.56	0.60	0.65	0.70	0.75	0.80	0.84	0.89	0.94	1.00	1.05	1.10	1.16
	Discrete Spd Setting	B	B	B	A	A	A	A	A	A	C	C	C	C	C	C	C
	RPM	573	620	660	705	745	785	820	860	895	925	960	990	1020	1050	1075	1105
2,400	BHP	0.48	0.52	0.57	0.61	0.66	0.72	0.78	0.83	0.87	0.92	0.97	1.02	1.07	1.13	1.19	1.25
	Discrete Spd Setting	B	B	A	A	A	A	A	A	A	C	C	C	C	C	C	C
	RPM	604	645	690	730	765	805	845	880	910	945	975	1010	1035	1065	1095	1125
2,500	BHP	0.52	0.57	0.61	0.66	0.72	0.78	0.83	0.89	0.94	1.00	1.03	1.08	1.14	1.20	1.25	1.31
	Discrete Spd Setting	B	B	A	A	A	A	A	A	C	C	C	C	C	C	C	C
	RPM	620	660	700	740	780	815	850	885	920	950	985	1015	1045	1075	1100	1130
2,600	BHP	0.56	0.61	0.66	0.70	0.76	0.82	0.88	0.93	0.98	1.04	1.08	1.14	1.20	1.26	1.32	1.37
	Discrete Spd Setting	B	A	A	A	A	A	A	A	C	C	C	C	C	C	C	C
	RPM	635	675	715	750	790	825	860	895	925	960	990	1020	1050	1080	1110	1135
2,700	BHP	0.61	0.66	0.71	0.76	0.82	0.87	0.93	0.98	1.04	1.10	1.15	1.21	1.27	1.33	1.39	1.45
	Discrete Spd Setting	B	A	A	A	A	A	A	A	C	C	C	C	C	C	C	C
	RPM	655	695	730	770	805	840	875	905	940	970	1000	1030	1060	1090	1120	1145
2,800	BHP	0.66	0.72	0.77	0.83	0.88	0.93	0.99	1.05	1.11	1.16	1.22	1.30	1.37	1.44	1.51	1.57
	Discrete Spd Setting	B	A	A	A	A	A	A	A	C	C	C	C	C	C	C	C
	RPM	670	710	750	785	815	850	885	915	950	980	1010	1040	1070	1100	1130	1155
2,900	BHP	0.71	0.77	0.82	0.87	0.93	0.98	1.04	1.10	1.16	1.22	1.30	1.36	1.43	1.50	1.57	
	Discrete Spd Setting	A	A	A	A	A	A	A	C	C	C	C	C	C	C	C	
	RPM	685	725	765	795	830	860	895	925	955	985	1020	1045	1075	1105	1135	
3,000	BHP	0.79	0.84	0.90	0.95	1.01	1.07	1.13	1.19	1.25	1.31	1.38	1.46	1.52	1.59		
	Discrete Spd Setting	A	A	A	A	A	A	A	C	C	C	C	C	C	C		
	RPM	710	745	780	815	850	885	915	945	975	1005	1035	1065	1090	1120		

Notes:
- Motor Sheave set to 1-turn open from factory.
- Factory torque setting is A. Torque setting is field-adjustable to any torque setting listed in drive table through the Wireless Service Tool.
- The unit can control the blower through LAT control. Enable this setting in the field with the Wireless Service Tool.
- The maximum allowable altitude of installation for this product is 6,561 ft (2,000 m).

Blower Performance SB096

Models: SB 072-300

SCFM	ESP (in.w.c.)	0.00	0.10	0.20	0.30	0.40	0.50	0.60	0.70	0.80	0.90	1.00	1.10	1.20	1.30	1.40	1.50
2,400	BHP	0.45	0.50	0.54	0.59	0.63	0.69	0.74	0.80	0.85	0.90	0.94	0.99	1.04	1.10	1.16	1.22
	Sheave/Mtr	B	B	B	B	B	A	A	A	A	A	A	A	A	A	C	C
	RPM	578	625	665	705	745	785	820	860	895	925	960	990	1020	1050	1080	1110
2,500	BHP	0.50	0.55	0.59	0.64	0.69	0.75	0.81	0.88	0.92	0.97	1.01	1.06	1.12	1.17	1.23	1.29
	Sheave/Mtr	B	B	B	B	A	A	A	A	A	A	A	A	A	C	C	C
	RPM	599	645	685	725	765	800	835	875	905	940	970	1005	1035	1060	1090	1120
2,600	BHP	0.55	0.60	0.65	0.69	0.75	0.80	0.86	0.92	0.97	1.02	1.08	1.13	1.19	1.25	1.30	1.36
	Sheave/Mtr	B	B	B	B	A	A	A	A	A	A	A	A	A	C	C	C
	RPM	625	665	705	740	780	815	850	885	920	950	985	1015	1045	1075	1100	1130
2,700	BHP	0.60	0.65	0.70	0.75	0.80	0.86	0.91	0.97	1.02	1.08	1.14	1.20	1.26	1.32	1.38	1.44
	Sheave/Mtr	B	B	B	A	A	A	A	A	A	A	A	A	C	C	C	C
	RPM	645	685	725	760	795	830	865	900	930	960	995	1025	1055	1085	1115	1140
2,800	BHP	0.65	0.71	0.76	0.82	0.87	0.93	0.98	1.04	1.10	1.16	1.21	1.28	1.36	1.43	1.50	1.56
	Sheave/Mtr	B	B	B	A	A	A	A	A	A	A	A	A	C	C	C	C
	RPM	665	705	745	780	810	845	880	910	945	975	1005	1035	1065	1095	1125	1150
2,900	BHP	0.71	0.76	0.82	0.87	0.92	0.98	1.03	1.09	1.16	1.22	1.29	1.36	1.43	1.50	1.57	1.63
	Sheave/Mtr	B	B	A	A	A	A	A	A	A	A	A	A	C	C	C	C
	RPM	685	720	760	795	825	860	890	920	955	985	1015	1045	1075	1105	1135	1160
3,000	BHP	0.78	0.84	0.89	0.95	1.00	1.06	1.12	1.18	1.24	1.30	1.37	1.43	1.50	1.58	1.64	1.71
	Sheave/Mtr	B	B	A	A	A	A	A	A	A	A	A	C	C	C	C	C
	RPM	700	740	775	810	845	880	910	940	970	1000	1030	1055	1085	1115	1140	1170
3,100	BHP	0.85	0.91	0.96	1.02	1.08	1.14	1.22	1.29	1.36	1.44	1.50	1.57	1.63	1.70	1.76	1.82
	Sheave/Mtr	B	B	A	A	A	A	A	A	A	A	A	C	C	C	C	C
	RPM	720	755	790	825	860	890	925	955	985	1015	1040	1070	1095	1125	1150	1175
3,200	BHP	0.93	1.00	1.07	1.14	1.20	1.26	1.32	1.38	1.44	1.51	1.57	1.64	1.70	1.78	1.85	1.92
	Sheave/Mtr	B	A	A	A	A	A	A	A	A	A	C	C	C	C	C	C
	RPM	740	775	810	845	875	905	935	965	995	1025	1050	1080	1105	1135	1160	1185
3,300	BHP	1.01	1.08	1.14	1.21	1.28	1.33	1.39	1.45	1.51	1.58	1.64	1.72	1.78	1.84	1.93	2.00
	Sheave/Mtr	B	A	A	A	A	A	A	A	A	A	C	C	C	C	C	E
	RPM	755	790	820	855	890	915	945	975	1005	1035	1060	1090	1115	1140	1170	1195
3,400	BHP	1.08	1.15	1.22	1.29	1.35	1.41	1.47	1.53	1.59	1.68	1.75	1.83	1.90	1.96	2.02	2.08
	Sheave/Mtr	A	A	A	A	A	A	A	A	A	A	C	C	C	C	E	E
	RPM	765	800	835	870	900	930	960	990	1015	1045	1070	1100	1125	1150	1175	1200
3,500	BHP	1.16	1.23	1.29	1.36	1.42	1.48	1.54	1.60	1.66	1.73	1.79	1.85	1.92	2.01	2.09	2.17
	Sheave/Mtr	A	A	A	A	A	A	A	A	A	C	C	C	C	E	E	E
	RPM	780	815	845	880	910	940	970	1000	1025	1055	1080	1105	1130	1160	1185	1210

Notes:
- A, 1 = Standard RPM/Standard Blower Motor
- E, 5 = High RPM/Large Blower Motor
- The maximum allowable altitude of installation for this product is 6,561 ft (2,000 m).

Table continued on next page.

Models:
SB
072-300

Blower Performance
SB096

Table continued from previous page.

SCFM	ESP (in.w.c.)	0.00	0.10	0.20	0.30	0.40	0.50	0.60	0.70	0.80	0.90	1.00	1.10	1.20	1.30	1.40	1.50
3,600	BHP	1.24	1.30	1.37	1.44	1.51	1.58	1.65	1.72	1.78	1.86	1.92	1.98	2.06	2.13	2.21	2.29
	Sheave/Mtr	A	A	A	A	A	A	A	A	A	C	C	C	E	E	E	E
	RPM	795	825	860	890	920	950	980	1010	1035	1065	1090	1115	1145	1165	1190	1215
3,700	BHP	1.34	1.40	1.46	1.53	1.61	1.68	1.75	1.82	1.90	1.97	2.06	2.13	2.21	2.28	2.36	2.44
	Sheave/Mtr	A	A	A	A	A	A	A	A	C	C	E	E	E	E	E	E
	RPM	820	850	880	910	940	970	1000	1025	1055	1080	1110	1135	1160	1180	1205	1230
3,800	BHP	1.43	1.49	1.56	1.63	1.70	1.78	1.86	1.94	2.02	2.12	2.20	2.28	2.34	2.42	2.50	2.58
	Sheave/Mtr	A	A	A	A	A	A	A	A	E	E	E	E	E	E	E	E
	RPM	840	870	900	930	960	990	1020	1045	1070	1100	1125	1150	1170	1195	1220	1245
3,900	BHP	1.58	1.64	1.71	1.78	1.85	1.93	2.01	2.09	2.19	2.27	2.35	2.41	2.49	2.57	2.65	
	Sheave/Mtr	A	A	A	A	A	A	D	D	E	E	E	E	E	E	E	
	RPM	865	890	920	950	980	1010	1035	1060	1090	1115	1140	1160	1185	1210	1235	
4,000	BHP	1.68	1.75	1.83	1.92	2.00	2.08	2.16	2.26	2.34	2.42	2.50	2.56	2.64	2.72	2.80	
	Sheave/Mtr	A	A	A	A	D	D	D	E	E	E	E	E	E	E	E	
	RPM	885	910	940	970	1000	1025	1050	1080	1105	1130	1155	1175	1200	1225	1250	

Notes:
- A, 1 = Standard RPM/Standard Blower Motor
- E, 5 = High RPM/Large Blower Motor
- The maximum allowable altitude of installation for this product is 6,561 ft (2,000 m).

Blower Performance SB096 with VFD

Models:
SB
072-300

SCFM	ESP (in.w.c.)	0.00	0.10	0.20	0.30	0.40	0.50	0.60	0.70	0.80	0.90	1.00	1.10	1.20	1.30	1.40	1.50
2,400	BHP	0.45	0.50	0.54	0.59	0.63	0.69	0.74	0.80	0.85	0.90	0.94	0.99	1.04	1.10	1.16	1.22
	Discrete Spd Setting	B	B	B	B	B	A	A	A	A	A	A	A	A	A	C	C
	RPM	578	625	665	705	745	785	820	860	895	925	960	990	1020	1050	1080	1110
2,500	BHP	0.50	0.55	0.59	0.64	0.69	0.75	0.81	0.88	0.92	0.97	1.01	1.06	1.12	1.17	1.23	1.29
	Discrete Spd Setting	B	B	B	B	A	A	A	A	A	A	A	A	A	C	C	C
	RPM	599	645	685	725	765	800	835	875	905	940	970	1005	1035	1060	1090	1120
2,600	BHP	0.55	0.60	0.65	0.69	0.75	0.80	0.86	0.92	0.97	1.02	1.08	1.13	1.19	1.25	1.30	1.36
	Discrete Spd Setting	B	B	B	B	A	A	A	A	A	A	A	A	A	C	C	C
	RPM	625	665	705	740	780	815	850	885	920	950	985	1015	1045	1075	1100	1130
2,700	BHP	0.60	0.65	0.70	0.75	0.80	0.86	0.91	0.97	1.02	1.08	1.14	1.20	1.26	1.32	1.38	1.44
	Discrete Spd Setting	B	B	B	A	A	A	A	A	A	A	A	A	C	C	C	C
	RPM	645	685	725	760	795	830	865	900	930	960	995	1025	1055	1085	1115	1140
2,800	BHP	0.65	0.71	0.76	0.82	0.87	0.93	0.98	1.04	1.10	1.16	1.21	1.28	1.36	1.43	1.50	1.56
	Discrete Spd Setting	B	B	B	A	A	A	A	A	A	A	A	A	C	C	C	C
	RPM	665	705	745	780	810	845	880	910	945	975	1005	1035	1065	1095	1125	1150
2,900	BHP	0.71	0.76	0.82	0.87	0.92	0.98	1.03	1.09	1.16	1.22	1.29	1.36	1.43	1.50	1.57	1.63
	Discrete Spd Setting	B	B	A	A	A	A	A	A	A	A	A	A	C	C	C	C
	RPM	685	720	760	795	825	860	890	920	955	985	1015	1045	1075	1105	1135	1160
3,000	BHP	0.78	0.84	0.89	0.95	1.00	1.06	1.12	1.18	1.24	1.30	1.37	1.43	1.50	1.58	1.64	1.71
	Discrete Spd Setting	B	B	A	A	A	A	A	A	A	A	A	C	C	C	C	C
	RPM	700	740	775	810	845	880	910	940	970	1000	1030	1055	1085	1115	1140	1170
3,100	BHP	0.85	0.91	0.96	1.02	1.08	1.14	1.22	1.29	1.36	1.44	1.50	1.57	1.63	1.70	1.76	1.82
	Discrete Spd Setting	B	B	A	A	A	A	A	A	A	A	A	C	C	C	C	C
	RPM	720	755	790	825	860	890	925	955	985	1015	1040	1070	1095	1125	1150	1175
3,200	BHP	0.93	1.00	1.07	1.14	1.20	1.26	1.32	1.38	1.44	1.51	1.57	1.64	1.70	1.78	1.85	1.92
	Discrete Spd Setting	B	A	A	A	A	A	A	A	A	A	C	C	C	C	C	C
	RPM	740	775	810	845	875	905	935	965	995	1025	1050	1080	1105	1135	1160	1185
3,300	BHP	1.01	1.08	1.14	1.21	1.28	1.33	1.39	1.45	1.51	1.58	1.64	1.72	1.78	1.84	1.93	2.00
	Discrete Spd Setting	B	A	A	A	A	A	A	A	A	A	C	C	C	C	C	C
	RPM	755	790	820	855	890	915	945	975	1005	1035	1060	1090	1115	1140	1170	1195
3,400	BHP	1.08	1.15	1.22	1.29	1.35	1.41	1.47	1.53	1.59	1.68	1.75	1.83	1.90	1.96	2.02	2.08
	Discrete Spd Setting	A	A	A	A	A	A	A	A	A	A	C	C	C	C	C	C
	RPM	765	800	835	870	900	930	960	990	1015	1045	1070	1100	1125	1150	1175	1200

Notes:
- Motor Sheave set to 1-turn open from factory.
- Factory torque setting is A. Torque setting is field-adjustable to any torque setting listed in drive table through the Wireless Service Tool.
- The unit can control the blower through LAT control. Enable this setting in the field with the Wireless Service Tool.
- The maximum allowable altitude of installation for this product is 6,561 ft (2,000 m).

Table continued on next page.

Models:
SB
072-300

Blower Performance
SB096 with VFD

Table continued from previous page.

SCFM	ESP (in.w.c.)	0.00	0.10	0.20	0.30	0.40	0.50	0.60	0.70	0.80	0.90	1.00	1.10	1.20	1.30	1.40	1.50
3,500	BHP	1.16	1.23	1.29	1.36	1.42	1.48	1.54	1.60	1.66	1.73	1.79	1.85	1.92	2.01	2.09	2.17
	Discrete Spd Setting	A	A	A	A	A	A	A	A	A	C	C	C	C	C	C	C
	RPM	780	815	845	880	910	940	970	1000	1025	1055	1080	1105	1130	1160	1185	1210
3,600	BHP	1.24	1.30	1.37	1.44	1.51	1.58	1.65	1.72	1.78	1.86	1.92	1.98	2.06	2.13	2.21	2.29
	Discrete Spd Setting	A	A	A	A	A	A	A	A	A	C	C	C	C	C	C	C
	RPM	795	825	860	890	920	950	980	1010	1035	1065	1090	1115	1145	1165	1190	1215
3,700	BHP	1.34	1.40	1.46	1.53	1.61	1.68	1.75	1.82	1.90	1.97	2.06	2.13	2.21	2.28	2.36	2.44
	Discrete Spd Setting	A	A	A	A	A	A	A	A	C	C	C	C	C	C	C	C
	RPM	820	850	880	910	940	970	1000	1025	1055	1080	1110	1135	1160	1180	1205	1230
3,800	BHP	1.43	1.49	1.56	1.63	1.70	1.78	1.86	1.94	2.02	2.12	2.20	2.28	2.34	2.42	2.50	2.58
	Discrete Spd Setting	A	A	A	A	A	A	A	A	C	C	C	C	C	C	C	C
	RPM	840	870	900	930	960	990	1020	1045	1070	1100	1125	1150	1170	1195	1220	1245
3,900	BHP	1.58	1.64	1.71	1.78	1.85	1.93	2.01	2.09	2.19	2.27	2.35	2.41	2.49	2.57	2.65	
	Discrete Spd Setting	A	A	A	A	A	A	A	A	C	C	C	C	C	C	C	
	RPM	865	890	920	950	980	1010	1035	1060	1090	1115	1140	1160	1185	1210	1235	
4,000	BHP	1.68	1.75	1.83	1.92	2.00	2.08	2.16	2.26	2.34	2.42	2.50	2.56	2.64	2.72	2.80	
	Discrete Spd Setting	A	A	A	A	A	A	A	C	C	C	C	C	C	C	C	
	RPM	885	910	940	970	1000	1025	1050	1080	1105	1130	1155	1175	1200	1225	1250	

Notes:
- Motor Sheave set to 1-turn open from factory.
- Factory torque setting is A. Torque setting is field-adjustable to any torque setting listed in drive table through the Wireless Service Tool.
- The unit can control the blower through LAT control. Enable this setting in the field with the Wireless Service Tool.
- The maximum allowable altitude of installation for this product is 6,561 ft (2,000 m).

Blower Performance SB120

Models:
SB
072-300

SCFM	ESP (in.w.c.)	0.00	0.10	0.20	0.30	0.40	0.50	0.60	0.70	0.80	0.90	1.00	1.10	1.20	1.30	1.40	1.50
3,000	BHP	0.75	0.81	0.86	0.91	0.97	1.03	1.09	1.15	1.21	1.27	1.34	1.41	1.47	1.54	1.61	1.67
	Sheave/Mtr	B	B	B	B	B	B	A	A	A	A	A	A	A	A	A	A
	RPM	680	720	755	790	825	860	895	925	955	985	1015	1045	1070	1100	1130	1155
3,100	BHP	0.82	0.88	0.94	0.99	1.04	1.10	1.17	1.26	1.33	1.40	1.46	1.53	1.59	1.66	1.72	1.80
	Sheave/Mtr	B	B	B	B	B	A	A	A	A	A	A	A	A	A	A	C
	RPM	700	735	775	805	840	875	905	940	970	1000	1025	1055	1080	1110	1135	1165
3,200	BHP	0.90	0.96	1.03	1.10	1.17	1.23	1.29	1.35	1.41	1.47	1.55	1.61	1.68	1.74	1.81	1.89
	Sheave/Mtr	B	B	B	B	B	A	A	A	A	A	A	A	A	A	A	C
	RPM	720	755	790	825	860	890	920	950	980	1010	1040	1065	1095	1120	1145	1175
3,300	BHP	0.98	1.04	1.11	1.18	1.25	1.31	1.37	1.43	1.49	1.55	1.62	1.68	1.75	1.81	1.88	1.95
	Sheave/Mtr	B	B	B	B	A	A	A	A	A	A	A	A	A	A	A	C
	RPM	740	770	805	840	875	905	935	965	995	1020	1050	1075	1105	1130	1155	1180
3,400	BHP	1.06	1.13	1.19	1.26	1.33	1.38	1.44	1.50	1.56	1.65	1.72	1.80	1.87	1.94	2.00	2.06
	Sheave/Mtr	B	B	B	B	A	A	A	A	A	A	A	A	A	A	C	C
	RPM	755	790	820	855	890	915	945	975	1005	1035	1060	1090	1115	1140	1165	1190
3,500	BHP	1.14	1.21	1.27	1.34	1.40	1.46	1.52	1.58	1.65	1.71	1.77	1.84	1.90	1.98	2.06	2.14
	Sheave/Mtr	B	B	B	A	A	A	A	A	A	A	A	A	A	A	C	C
	RPM	770	805	835	870	900	930	960	990	1020	1045	1070	1100	1125	1150	1175	1200
3,600	BHP	1.23	1.29	1.36	1.42	1.50	1.57	1.64	1.71	1.77	1.84	1.90	1.96	2.05	2.13	2.21	2.27
	Sheave/Mtr	B	B	B	A	A	A	A	A	A	A	A	A	A	C	C	C
	RPM	790	820	855	885	915	945	975	1005	1030	1060	1085	1110	1140	1165	1190	1210
3,700	BHP	1.32	1.38	1.44	1.51	1.58	1.65	1.73	1.81	1.88	1.96	2.03	2.10	2.18	2.26	2.34	2.42
	Sheave/Mtr	B	B	A	A	A	A	A	A	A	A	A	A	A	C	C	C
	RPM	810	840	870	900	930	960	990	1020	1045	1075	1100	1125	1150	1175	1200	1225
3,800	BHP	1.41	1.47	1.54	1.61	1.68	1.75	1.82	1.91	1.99	2.07	2.17	2.25	2.31	2.39	2.47	2.55
	Sheave/Mtr	B	B	A	A	A	A	A	A	A	A	A	A	A	C	C	C
	RPM	830	860	890	920	950	980	1005	1035	1060	1085	1115	1140	1160	1185	1210	1235
3,900	BHP	1.54	1.60	1.67	1.74	1.82	1.89	1.96	2.04	2.14	2.22	2.30	2.38	2.46	2.52	2.60	2.68
	Sheave/Mtr	B	A	A	A	A	A	A	A	A	A	A	A	C	C	C	C
	RPM	850	875	905	935	965	995	1020	1045	1075	1100	1125	1150	1175	1195	1220	1245
4,000	BHP	1.63	1.71	1.78	1.86	1.94	2.03	2.11	2.19	2.27	2.37	2.45	2.51	2.59	2.67	2.75	2.85
	Sheave/Mtr	A	A	A	A	A	A	A	A	A	A	A	A	C	C	C	C
	RPM	865	895	920	950	980	1010	1035	1060	1085	1115	1140	1160	1185	1210	1235	1260
4,100	BHP	1.73	1.81	1.90	1.97	2.05	2.12	2.20	2.27	2.34	2.42	2.52	2.62	2.70	2.80	2.90	
	Sheave/Mtr	A	A	A	A	A	A	A	A	A	A	A	C	C	C	C	
	RPM	885	915	945	970	1000	1025	1055	1080	1105	1130	1155	1180	1200	1225	1250	
4,200	BHP	1.87	1.94	2.02	2.08	2.16	2.24	2.32	2.40	2.48	2.58	2.68	2.76	2.86	2.96		
	Sheave/Mtr	A	A	A	A	A	A	A	A	A	A	C	C	C	C		
	RPM	905	935	965	990	1020	1045	1070	1095	1120	1145	1170	1190	1215	1240		

Notes:
- A, 1 = Standard RPM/Standard Blower Motor
- E, 5 = High RPM/Large Blower Motor
- The maximum allowable altitude of installation for this product is 6,561 ft (2,000 m).

Table continued on next page.

Models:
SB
072-300

Blower Performance
SB120

Table continued from previous page.

SCFM	ESP (in.w.c.)	0.00	0.10	0.20	0.30	0.40	0.50	0.60	0.70	0.80	0.90	1.00	1.10	1.20	1.30	1.40	1.50
4,300	BHP	2.00	2.07	2.16	2.23	2.31	2.41	2.49	2.57	2.66	2.74	2.84	2.94	3.02	3.15		
	Sheave/Mtr	A	A	A	A	A	A	A	A	A	C	C	C	E	E		
	RPM	930	955	985	1010	1035	1065	1090	1115	1140	1160	1185	1210	1230	1255		
4,400	BHP	2.14	2.22	2.32	2.40	2.48	2.56	2.65	2.74	2.82	2.92	3.00	3.10	3.18			
	Sheave/Mtr	A	A	A	A	A	A	A	A	A	C	E	E	E			
	RPM	950	975	1005	1030	1055	1080	1110	1135	1155	1180	1200	1225	1245			
4,500	BHP	2.30	2.38	2.46	2.54	2.62	2.72	2.80	2.88	3.00	3.08	3.16	3.26				
	Sheave/Mtr	A	A	A	A	A	A	A	A	D	E	E	E				
	RPM	970	995	1020	1045	1070	1100	1125	1145	1170	1195	1215	1240				
4,600	BHP	2.39	2.45	2.54	2.63	2.72	2.83	2.92	3.00	3.10	3.18	3.28	3.38				
	Sheave/Mtr	A	A	A	A	A	A	A	D	D	E	E	E				
	RPM	980	1000	1025	1050	1075	1105	1130	1150	1175	1195	1220	1245				
4,700	BHP	2.46	2.52	2.62	2.72	2.82	2.92	3.02	3.12	3.22	3.32	3.40	3.50				
	Sheave/Mtr	A	A	A	A	A	A	D	D	E	E	E	E				
	RPM	985	1005	1030	1055	1080	1105	1130	1155	1180	1205	1225	1250				
4,800	BHP	2.57	2.64	2.74	2.84	2.94	3.04	3.14	3.24	3.32	3.42	3.52	3.60				
	Sheave/Mtr	A	A	A	A	A	D	D	D	E	E	E	E				
	RPM	990	1010	1035	1060	1085	1110	1135	1160	1180	1205	1230	1250				
4,900	BHP	2.68	2.78	2.88	3.00	3.06	3.16	3.26	3.36	3.44	3.54	3.64	3.75				
	Sheave/Mtr	A	A	A	D	D	D	D	E	E	E	E	E				
	RPM	995	1020	1045	1070	1090	1115	1140	1165	1185	1210	1235	1255				
5,000	BHP	2.82	2.92	3.00	3.10	3.20	3.28	3.38	3.48	3.56	3.66	3.74					
	Sheave/Mtr	A	A	D	D	D	D	D	E	E	E	E					
	RPM	1005	1030	1050	1075	1100	1120	1145	1170	1190	1215	1235					

Notes:
- A, 1 = Standard RPM/Standard Blower Motor
- E, 5 = High RPM/Large Blower Motor
- The maximum allowable altitude of installation for this product is 6,561 ft (2,000 m).

Blower Performance SB120 with VFD

Models:
SB
072-300

SCFM	ESP (in.w.c.)	0.00	0.10	0.20	0.30	0.40	0.50	0.60	0.70	0.80	0.90	1.00	1.10	1.20	1.30	1.40	1.50
3,000	BHP	0.75	0.81	0.86	0.91	0.97	1.03	1.09	1.15	1.21	1.27	1.34	1.41	1.47	1.54	1.61	1.67
	Discrete Spd Setting	B	B	B	B	B	B	A	A	A	A	A	A	A	A	A	A
	RPM	680	720	755	790	825	860	895	925	955	985	1015	1045	1070	1100	1130	1155
3,100	BHP	0.82	0.88	0.94	0.99	1.04	1.10	1.17	1.26	1.33	1.40	1.46	1.53	1.59	1.66	1.72	1.80
	Discrete Spd Setting	B	B	B	B	B	A	A	A	A	A	A	A	A	A	A	C
	RPM	700	735	775	805	840	875	905	940	970	1000	1025	1055	1080	1110	1135	1165
3,200	BHP	0.90	0.96	1.03	1.10	1.17	1.23	1.29	1.35	1.41	1.47	1.55	1.61	1.68	1.74	1.81	1.89
	Discrete Spd Setting	B	B	B	B	B	A	A	A	A	A	A	A	A	A	A	C
	RPM	720	755	790	825	860	890	920	950	980	1010	1040	1065	1095	1120	1145	1175
3,300	BHP	0.98	1.04	1.11	1.18	1.25	1.31	1.37	1.43	1.49	1.55	1.62	1.68	1.75	1.81	1.88	1.95
	Discrete Spd Setting	B	B	B	B	A	A	A	A	A	A	A	A	A	A	A	C
	RPM	740	770	805	840	875	905	935	965	995	1020	1050	1075	1105	1130	1155	1180
3,400	BHP	1.06	1.13	1.19	1.26	1.33	1.38	1.44	1.50	1.56	1.65	1.72	1.80	1.87	1.94	2.00	2.06
	Discrete Spd Setting	B	B	B	B	A	A	A	A	A	A	A	A	A	A	C	C
	RPM	755	790	820	855	890	915	945	975	1005	1035	1060	1090	1115	1140	1165	1190
3,500	BHP	1.14	1.21	1.27	1.34	1.40	1.46	1.52	1.58	1.65	1.71	1.77	1.84	1.90	1.98	2.06	2.14
	Discrete Spd Setting	B	B	B	A	A	A	A	A	A	A	A	A	A	A	C	C
	RPM	770	805	835	870	900	930	960	990	1020	1045	1070	1100	1125	1150	1175	1200
3,600	BHP	1.23	1.29	1.36	1.42	1.50	1.57	1.64	1.71	1.77	1.84	1.90	1.96	2.05	2.13	2.21	2.27
	Discrete Spd Setting	B	B	B	A	A	A	A	A	A	A	A	A	A	C	C	C
	RPM	790	820	855	885	915	945	975	1005	1030	1060	1085	1110	1140	1165	1190	1210
3,700	BHP	1.32	1.38	1.44	1.51	1.58	1.65	1.73	1.81	1.88	1.96	2.03	2.10	2.18	2.26	2.34	2.42
	Discrete Spd Setting	B	B	A	A	A	A	A	A	A	A	A	A	A	C	C	C
	RPM	810	840	870	900	930	960	990	1020	1045	1075	1100	1125	1150	1175	1200	1225
3,800	BHP	1.41	1.47	1.54	1.61	1.68	1.75	1.82	1.91	1.99	2.07	2.17	2.25	2.31	2.39	2.47	2.55
	Discrete Spd Setting	B	B	A	A	A	A	A	A	A	A	A	A	A	C	C	C
	RPM	830	860	890	920	950	980	1005	1035	1060	1085	1115	1140	1160	1185	1210	1235
3,900	BHP	1.54	1.60	1.67	1.74	1.82	1.89	1.96	2.04	2.14	2.22	2.30	2.38	2.46	2.52	2.60	2.68
	Discrete Spd Setting	B	A	A	A	A	A	A	A	A	A	A	A	C	C	C	C
	RPM	850	875	905	935	965	995	1020	1045	1075	1100	1125	1150	1175	1195	1220	1245
4,000	BHP	1.63	1.71	1.78	1.86	1.94	2.03	2.11	2.19	2.27	2.37	2.45	2.51	2.59	2.67	2.75	2.85
	Discrete Spd Setting	A	A	A	A	A	A	A	A	A	A	A	A	C	C	C	C
	RPM	865	895	920	950	980	1010	1035	1060	1085	1115	1140	1160	1185	1210	1235	1260
4,100	BHP	1.73	1.81	1.90	1.97	2.05	2.12	2.20	2.27	2.34	2.42	2.52	2.62	2.70	2.80	2.90	
	Discrete Spd Setting	A	A	A	A	A	A	A	A	A	A	A	C	C	C	C	
	RPM	885	915	945	970	1000	1025	1055	1080	1105	1130	1155	1180	1200	1225	1250	
4,200	BHP	1.87	1.94	2.02	2.08	2.16	2.24	2.32	2.40	2.48	2.58	2.68	2.76	2.86	2.96		
	Discrete Spd Setting	A	A	A	A	A	A	A	A	A	A	C	C	C	C		
	RPM	905	935	965	990	1020	1045	1070	1095	1120	1145	1170	1190	1215	1240		
4,300	BHP	2.00	2.07	2.16	2.23	2.31	2.41	2.49	2.57	2.66	2.74	2.84	2.94	3.02	3.15		
	Discrete Spd Setting	A	A	A	A	A	A	A	A	A	C	C	C	E	E		
	RPM	930	955	985	1010	1035	1065	1090	1115	1140	1160	1185	1210	1230	1255		

Notes:
- Motor Sheave set to 1-turn open from factory.
- Factory torque setting is A. Torque setting is field-adjustable to any torque setting listed in drive table through the Wireless Service Tool.
- The unit can control the blower through LAT control. Enable this setting in the field with the Wireless Service Tool.
- The maximum allowable altitude of installation for this product is 6,561 ft (2,000 m).

Table continued on next page.

Models:
SB
072-300

Blower Performance
SB120 with VFD

Table continued from previous page.

SCFM	ESP (in.w.c.)	0.00	0.10	0.20	0.30	0.40	0.50	0.60	0.70	0.80	0.90	1.00	1.10	1.20	1.30	1.40	1.50
4,400	BHP	2.14	2.22	2.32	2.40	2.48	2.56	2.65	2.74	2.82	2.92	3.00	3.10	3.18			
	Discrete Spd Setting	A	A	A	A	A	A	A	A	A	C	C	C	C			
	RPM	950	975	1005	1030	1055	1080	1110	1135	1155	1180	1200	1225	1245			
4,500	BHP	2.30	2.38	2.46	2.54	2.62	2.72	2.80	2.88	3.00	3.08	3.16	3.26				
	Discrete Spd Setting	A	A	A	A	A	A	A	A	A	C	C	C				
	RPM	970	995	1020	1045	1070	1100	1125	1145	1170	1195	1215	1240				
4,600	BHP	2.39	2.45	2.54	2.63	2.72	2.83	2.92	3.00	3.10	3.18	3.28	3.38				
	Discrete Spd Setting	A	A	A	A	A	A	A	A	A	C	C	C				
	RPM	980	1000	1025	1050	1075	1105	1130	1150	1175	1195	1220	1245				
4,700	BHP	2.46	2.52	2.62	2.72	2.82	2.92	3.02	3.12	3.22	3.32	3.40	3.50				
	Discrete Spd Setting	A	A	A	A	A	A	A	A	C	C	C	C				
	RPM	985	1005	1030	1055	1080	1105	1130	1155	1180	1205	1225	1250				
4,800	BHP	2.57	2.64	2.74	2.84	2.94	3.04	3.14	3.24	3.32	3.42	3.52	3.60				
	Discrete Spd Setting	A	A	A	A	A	A	A	A	C	C	C	C				
	RPM	990	1010	1035	1060	1085	1110	1135	1160	1180	1205	1230	1250				
4,900	BHP	2.68	2.78	2.88	3.00	3.06	3.16	3.26	3.36	3.44	3.54	3.64	3.75				
	Discrete Spd Setting	A	A	A	A	A	A	A	C	C	C	C	C				
	RPM	995	1020	1045	1070	1090	1115	1140	1165	1185	1210	1235	1255				
5,000	BHP	2.82	2.92	3.00	3.10	3.20	3.28	3.38	3.48	3.56	3.66	3.74					
	Discrete Spd Setting	A	A	A	A	A	A	A	C	C	C	C					
	RPM	1005	1030	1050	1075	1100	1120	1145	1170	1190	1215	1235					

Notes:
- Motor Sheave set to 1-turn open from factory.
- Factory torque setting is A. Torque setting is field-adjustable to any torque setting listed in drive table through the Wireless Service Tool.
- The unit can control the blower through LAT control. Enable this setting in the field with the Wireless Service Tool.
- The maximum allowable altitude of installation for this product is 6,561 ft (2,000 m).

Blower Performance SB168

Models:
SB
072-300

SCFM	ESP (in.w.c.)	0.00	0.10	0.20	0.30	0.40	0.50	0.60	0.70	0.80	0.90	1.00	1.10	1.20	1.30	1.40	1.50
4,200	BHP			0.69	0.78	0.86	0.95	1.02	1.11	1.21	1.32	1.41	1.50	1.57	1.64	1.72	1.80
	Sheave/Mtr			B	B	B	B	A	A	A	A	A	A	A	C	C	C
	RPM			547	594	640	685	725	765	805	845	880	915	945	975	1005	1030
4,400	BHP			0.75	0.83	0.92	1.01	1.11	1.21	1.31	1.41	1.51	1.60	1.68	1.76	1.85	1.94
	Sheave/Mtr			B	B	B	B	A	A	A	A	A	A	A	C	C	C
	RPM			563	609	655	695	735	775	815	855	890	925	955	985	1015	1045
4,600	BHP		0.75	0.85	0.95	1.03	1.11	1.19	1.30	1.40	1.50	1.60	1.70	1.78	1.89	2.00	2.10
	Sheave/Mtr		B	B	B	B	B	A	A	A	A	A	A	C	C	C	C
	RPM		526	573	625	665	705	745	785	825	860	895	930	960	995	1025	1050
4,800	BHP		0.83	0.94	1.03	1.12	1.20	1.30	1.40	1.53	1.63	1.73	1.82	1.92	2.00	2.12	2.22
	Sheave/Mtr		B	B	B	B	A	A	A	A	A	A	A	C	C	C	C
	RPM		542	594	640	680	720	760	795	835	870	905	935	970	1000	1030	1055
5,000	BHP		0.93	1.02	1.11	1.20	1.31	1.41	1.52	1.64	1.76	1.85	1.95	2.03	2.12	2.24	2.36
	Sheave/Mtr		B	B	B	B	A	A	A	A	A	A	A	C	C	C	C
	RPM		563	609	650	690	735	770	805	840	880	910	945	975	1005	1035	1065
5,200	BHP	0.93	1.02	1.10	1.20	1.29	1.39	1.50	1.61	1.72	1.83	1.94	2.06	2.15	2.26	2.38	2.50
	Sheave/Mtr	B	B	B	B	B	A	A	A	A	A	A	A	C	C	C	C
	RPM	542	583	625	665	705	745	780	815	850	885	920	955	985	1015	1045	1075
5,400	BHP	1.03	1.10	1.19	1.29	1.39	1.50	1.59	1.70	1.80	1.92	2.03	2.16	2.26	2.38	2.50	2.62
	Sheave/Mtr	B	B	B	B	B	A	A	A	A	A	A	C	C	C	C	C
	RPM	563	599	640	680	720	760	790	825	860	895	925	960	990	1020	1050	1080
5,600	BHP	1.12	1.19	1.28	1.39	1.50	1.61	1.72	1.84	1.93	2.06	2.17	2.29	2.40	2.54	2.69	2.83
	Sheave/Mtr	B	B	B	B	A	A	A	A	A	A	A	C	C	C	C	C
	RPM	583	620	655	695	735	770	805	840	870	905	935	970	1000	1030	1060	1090
5,800	BHP	1.17	1.28	1.39	1.49	1.60	1.70	1.81	1.90	2.02	2.14	2.28	2.40	2.52	2.67	2.81	2.96
	Sheave/Mtr	B	B	B	B	A	A	A	A	A	A	A	C	C	C	C	C
	RPM	588	630	670	710	750	780	815	845	880	910	945	975	1005	1035	1065	1095
6,000	BHP	1.25	1.40	1.51	1.61	1.73	1.84	1.94	2.05	2.18	2.30	2.42	2.54	2.67	2.79	2.94	3.08
	Sheave/Mtr	B	B	B	A	A	A	A	A	A	A	A	C	C	C	C	E
	RPM	604	645	685	720	760	795	825	860	895	925	955	985	1015	1040	1070	1100
6,200	BHP	1.40	1.51	1.62	1.75	1.86	1.98	2.09	2.20	2.34	2.49	2.63	2.78	2.92	3.06	3.18	
	Sheave/Mtr	B	B	B	A	A	A	A	A	A	A	C	C	C	E	E	
	RPM	625	660	695	735	770	805	840	875	905	935	965	995	1025	1055	1080	
6,400	BHP	1.55	1.68	1.79	1.90	2.04	2.18	2.32	2.44	2.56	2.68	2.80	2.92	3.07	3.19	3.33	
	Sheave/Mtr	B	B	B	A	A	A	A	A	A	A	C	C	E	E	E	
	RPM	640	680	715	750	785	820	855	885	915	945	975	1005	1035	1060	1090	
6,600	BHP	1.73	1.84	1.94	2.06	2.20	2.34	2.46	2.58	2.70	2.82	2.94	3.07	3.19	3.34	3.46	
	Sheave/Mtr	B	B	A	A	A	A	A	A	A	A	C	E	E	E	E	
	RPM	665	700	730	765	800	835	865	895	925	955	985	1015	1040	1070	1095	
6,800	BHP	1.87	1.98	2.08	2.20	2.34	2.48	2.62	2.74	2.86	2.96	3.08	3.24	3.38	3.55		
	Sheave/Mtr	B	B	A	A	A	A	A	A	A	C	E	E	E	E		
	RPM	685	715	745	775	810	845	880	910	940	965	995	1025	1050	1080		
7,000	BHP	2.03	2.13	2.22	2.36	2.50	2.62	2.76	2.88	3.00	3.12	3.22	3.37	3.49	3.61		
	Sheave/Mtr	B	A	A	A	A	A	A	A	D	E	E	E	E	E		
	RPM	705	730	755	790	825	855	890	920	950	980	1005	1035	1060	1085		

Notes:
- A, 1 = Standard RPM/Standard Blower Motor
- E, 5 = High RPM/Large Blower Motor
- The maximum allowable altitude of installation for this product is 6,561 ft (2,000 m).

Models:
SB
072-300

Blower Performance
SB168 with VFD

SCFM	ESP (in.w.c.)	0.00	0.10	0.20	0.30	0.40	0.50	0.60	0.70	0.80	0.90	1.00	1.10	1.20	1.30	1.40	1.50
4,200	BHP			0.69	0.78	0.86	0.95	1.02	1.11	1.21	1.32	1.41	1.50	1.57	1.64	1.72	1.80
	Discrete Spd Setting			B	B	B	B	A	A	A	A	A	A	A	C	C	C
	RPM			547	594	640	685	725	765	805	845	880	915	945	975	1005	1030
4,400	BHP			0.75	0.83	0.92	1.01	1.11	1.21	1.31	1.41	1.51	1.60	1.68	1.76	1.85	1.94
	Discrete Spd Setting			B	B	B	B	A	A	A	A	A	A	A	C	C	C
	RPM			563	609	655	695	735	775	815	855	890	925	955	985	1015	1045
4,600	BHP		0.75	0.85	0.95	1.03	1.11	1.19	1.30	1.40	1.50	1.60	1.70	1.78	1.89	2.00	2.10
	Discrete Spd Setting		B	B	B	B	B	A	A	A	A	A	A	C	C	C	C
	RPM		526	573	625	665	705	745	785	825	860	895	930	960	995	1025	1050
4,800	BHP		0.83	0.94	1.03	1.12	1.20	1.30	1.40	1.53	1.63	1.73	1.82	1.92	2.00	2.12	2.22
	Discrete Spd Setting		B	B	B	B	A	A	A	A	A	A	A	C	C	C	C
	RPM		542	594	640	680	720	760	795	835	870	905	935	970	1000	1030	1055
5,000	BHP		0.93	1.02	1.11	1.20	1.31	1.41	1.52	1.64	1.76	1.85	1.95	2.03	2.12	2.24	2.36
	Discrete Spd Setting		B	B	B	B	A	A	A	A	A	A	A	C	C	C	C
	RPM		563	609	650	690	735	770	805	840	880	910	945	975	1005	1035	1065
5,200	BHP	0.93	1.02	1.10	1.20	1.29	1.39	1.50	1.61	1.72	1.83	1.94	2.06	2.15	2.26	2.38	2.50
	Discrete Spd Setting	B	B	B	B	B	A	A	A	A	A	A	A	C	C	C	C
	RPM	542	583	625	665	705	745	780	815	850	885	920	955	985	1015	1045	1075
5,400	BHP	1.03	1.10	1.19	1.29	1.39	1.50	1.59	1.70	1.80	1.92	2.03	2.16	2.26	2.38	2.50	2.62
	Discrete Spd Setting	B	B	B	B	B	A	A	A	A	A	A	C	C	C	C	C
	RPM	563	599	640	680	720	760	790	825	860	895	925	960	990	1020	1050	1080
5,600	BHP	1.12	1.19	1.28	1.39	1.50	1.61	1.72	1.84	1.93	2.06	2.17	2.29	2.40	2.54	2.69	2.83
	Discrete Spd Setting	B	B	B	B	A	A	A	A	A	A	A	C	C	C	C	C
	RPM	583	620	655	695	735	770	805	840	870	905	935	970	1000	1030	1060	1090
5,800	BHP	1.17	1.28	1.39	1.49	1.60	1.70	1.81	1.90	2.02	2.14	2.28	2.40	2.52	2.67	2.81	2.96
	Discrete Spd Setting	B	B	B	B	A	A	A	A	A	A	A	C	C	C	C	C
	RPM	588	630	670	710	750	780	815	845	880	910	945	975	1005	1035	1065	1095
6,000	BHP	1.25	1.40	1.51	1.61	1.73	1.84	1.94	2.05	2.18	2.30	2.42	2.54	2.67	2.79	2.94	3.08
	Discrete Spd Setting	B	B	B	A	A	A	A	A	A	A	A	C	C	C	C	C
	RPM	604	645	685	720	760	795	825	860	895	925	955	985	1015	1040	1070	1100
6,200	BHP	1.40	1.51	1.62	1.75	1.86	1.98	2.09	2.20	2.34	2.49	2.63	2.78	2.92	3.06	3.18	
	Discrete Spd Setting	B	B	B	A	A	A	A	A	A	A	C	C	C	C	C	
	RPM	625	660	695	735	770	805	840	875	905	935	965	995	1025	1055	1080	
6,400	BHP	1.55	1.68	1.79	1.90	2.04	2.18	2.32	2.44	2.56	2.68	2.80	2.92	3.07	3.19	3.33	
	Discrete Spd Setting	B	B	B	A	A	A	A	A	A	A	C	C	C	C	C	
	RPM	640	680	715	750	785	820	855	885	915	945	975	1005	1035	1060	1090	
6,600	BHP	1.73	1.84	1.94	2.06	2.20	2.34	2.46	2.58	2.70	2.82	2.94	3.07	3.19	3.34	3.46	
	Discrete Spd Setting	B	B	A	A	A	A	A	A	A	A	C	C	C	C	C	
	RPM	665	700	730	765	800	835	865	895	925	955	985	1015	1040	1070	1095	
6,800	BHP	1.87	1.98	2.08	2.20	2.34	2.48	2.62	2.74	2.86	2.96	3.08	3.24	3.38	3.55		
	Discrete Spd Setting	B	B	A	A	A	A	A	A	A	C	C	C	C	C		
	RPM	685	715	745	775	810	845	880	910	940	965	995	1025	1050	1080		
7,000	BHP	2.03	2.13	2.22	2.36	2.50	2.62	2.76	2.88	3.00	3.12	3.22	3.37	3.49	3.61		
	Discrete Spd Setting	B	A	A	A	A	A	A	A	A	C	C	C	C	C		
	RPM	705	730	755	790	825	855	890	920	950	980	1005	1035	1060	1085		

Notes:
- Motor Sheave set to 1-turn open from factory.
- Factory torque setting is A. Torque setting is field-adjustable to any torque setting listed in drive table through the Wireless Service Tool.
- The unit can control the blower through LAT control. Enable this setting in the field with the Wireless Service Tool.
- The maximum allowable altitude of installation for this product is 6,561 ft (2,000 m).

Blower Performance SB192

Models:
SB
072-300

SCFM	ESP (in.w.c.)	0.00	0.10	0.20	0.30	0.40	0.50	0.60	0.70	0.80	0.90	1.00	1.10	1.20	1.30	1.40	1.50
4,800	BHP		0.98	1.07	1.16	1.24	1.34	1.47	1.59	1.69	1.78	1.87	1.96	2.06	2.18	2.30	2.42
	Sheave/Mtr		B	B	B	B	A	A	A	A	A	A	A	C	C	C	C
	RPM		615	660	700	740	775	815	855	890	920	955	985	1015	1045	1075	1105
5,000	BHP	0.99	1.07	1.18	1.27	1.37	1.49	1.60	1.73	1.82	1.92	2.00	2.10	2.22	2.32	2.44	2.56
	Sheave/Mtr	B	B	B	B	A	A	A	A	A	A	A	A	C	C	C	C
	RPM	594	635	680	720	760	795	830	870	900	935	965	1000	1030	1055	1085	1115
5,200	BHP	1.09	1.18	1.28	1.36	1.48	1.59	1.70	1.82	1.93	2.02	2.14	2.24	2.36	2.48	2.60	2.72
	Sheave/Mtr	B	B	B	B	A	A	A	A	A	A	A	C	C	C	C	C
	RPM	620	660	700	735	775	810	845	880	915	945	980	1010	1040	1070	1100	1130
5,400	BHP	1.19	1.29	1.39	1.48	1.59	1.70	1.80	1.92	2.03	2.16	2.26	2.38	2.50	2.62	2.74	2.87
	Sheave/Mtr	B	B	B	A	A	A	A	A	A	A	A	C	C	C	C	C
	RPM	640	680	720	755	790	825	860	895	925	960	990	1020	1050	1080	1110	1140
5,600	BHP	1.30	1.40	1.51	1.62	1.74	1.85	1.95	2.08	2.18	2.31	2.42	2.57	2.71	2.86	2.98	3.12
	Sheave/Mtr	B	B	B	A	A	A	A	A	A	A	C	C	C	C	C	E
	RPM	660	700	740	775	810	845	875	910	940	975	1005	1035	1065	1095	1120	1150
5,800	BHP	1.41	1.52	1.63	1.73	1.84	1.95	2.06	2.18	2.32	2.44	2.57	2.72	2.86	3.00	3.15	3.27
	Sheave/Mtr	B	B	A	A	A	A	A	A	A	A	C	C	C	E	E	E
	RPM	680	720	760	790	825	860	890	920	955	985	1015	1045	1075	1105	1135	1160
6,000	BHP	1.56	1.67	1.78	1.89	2.00	2.12	2.24	2.36	2.48	2.60	2.74	2.89	3.01	3.15	3.30	3.42
	Sheave/Mtr	B	B	A	A	A	A	A	A	A	C	C	C	E	E	E	E
	RPM	700	740	775	810	845	880	910	940	970	1000	1030	1060	1085	1115	1145	1170
6,200	BHP	1.70	1.83	1.94	2.06	2.17	2.30	2.44	2.58	2.73	2.87	3.02	3.14	3.28	3.40	3.54	3.66
	Sheave/Mtr	B	A	A	A	A	A	A	A	A	C	E	E	E	E	E	E
	RPM	720	760	795	830	865	895	925	955	985	1015	1045	1070	1100	1125	1155	1180
6,400	BHP	1.88	2.02	2.16	2.28	2.42	2.54	2.66	2.78	2.90	3.04	3.16	3.31	3.43	3.58	3.72	3.86
	Sheave/Mtr	B	A	A	A	A	A	A	A	C	E	E	E	E	E	E	E
	RPM	745	780	815	845	880	910	940	970	1000	1030	1055	1085	1110	1140	1165	1190
6,600	BHP	2.06	2.18	2.32	2.46	2.58	2.70	2.82	2.94	3.07	3.19	3.34	3.46	3.60	3.74	3.88	4.02
	Sheave/Mtr	A	A	A	A	A	A	A	A	E	E	E	E	E	E	E	E
	RPM	765	795	830	865	895	925	955	985	1015	1040	1070	1095	1125	1150	1175	1200
6,800	BHP	2.22	2.36	2.50	2.62	2.74	2.86	3.00	3.10	3.27	3.41	3.58	3.72	3.85	3.97	4.11	4.23
	Sheave/Mtr	A	A	A	A	A	A	D	D	E	E	E	E	E	E	E	E
	RPM	780	815	850	880	910	940	970	1000	1030	1055	1085	1110	1135	1160	1190	1215

Notes:
- A, 1 = Standard RPM/Standard Blower Motor
- E, 5 = High RPM/Large Blower Motor
- The maximum allowable altitude of installation for this product is 6,561 ft (2,000 m).

Table continued on next page.

Models:
SB
072-300

Blower Performance
SB192

Table continued from previous page.

SCFM	ESP (in.w.c.)	0.00	0.10	0.20	0.30	0.40	0.50	0.60	0.70	0.80	0.90	1.00	1.10	1.20	1.30	1.40	1.50
7,000	BHP	2.40	2.54	2.66	2.80	2.92	3.04	3.14	3.27	3.39	3.54	3.66	3.78	3.96	4.12	4.28	4.44
	Sheave/Mtr	A	A	A	A	A	D	D	E	E	E	E	E	E	E	E	E
	RPM	800	835	865	900	930	960	985	1015	1040	1070	1095	1120	1150	1175	1200	1225
7,200	BHP	2.58	2.70	2.85	2.99	3.14	3.28	3.42	3.54	3.66	3.81	3.93	4.06	4.22	4.38	4.54	4.70
	Sheave/Mtr	A	A	A	A	D	D	E	E	E	E	E	E	E	E	E	E
	RPM	820	850	885	915	945	975	1005	1030	1055	1085	1110	1135	1160	1185	1210	1235
7,400	BHP	2.76	2.88	3.02	3.16	3.31	3.45	3.61	3.75	3.92	4.06	4.20	4.36	4.52	4.68	4.81	4.97
	Sheave/Mtr	A	A	D	D	D	D	E	E	E	E	E	E	E	E	E	E
	RPM	840	870	900	930	960	990	1020	1045	1075	1100	1125	1150	1175	1200	1220	1245
7,600	BHP	2.94	3.07	3.22	3.36	3.50	3.63	3.82	3.98	4.14	4.34	4.50	4.66	4.78	4.94		
	Sheave/Mtr	A	D	D	D	D	E	E	E	E	E	E	E	E	E		
	RPM	860	890	920	950	980	1005	1035	1060	1085	1115	1140	1165	1185	1210		
7,800	BHP	3.22	3.34	3.49	3.63	3.78	3.96	4.12	4.28	4.44	4.63	4.76	4.92				
	Sheave/Mtr	D	D	D	D	D	E	E	E	E	E	E	E				
	RPM	880	905	935	965	995	1025	1050	1075	1100	1130	1150	1175				
8,000	BHP	3.41	3.58	3.75	3.92	4.06	4.26	4.42	4.58	4.74	4.90						
	Sheave/Mtr	D	D	D	D	E	E	E	E	E	E						
	RPM	895	925	955	985	1010	1040	1065	1090	1115	1140						

Notes:
- A, 1 = Standard RPM/Standard Blower Motor
- E, 5 = High RPM/Large Blower Motor
- The maximum allowable altitude of installation for this product is 6,561 ft (2,000 m).

Blower Performance SB192 with VFD

Models:
SB
072-300

SCFM	ESP (in.w.c.)	0.00	0.10	0.20	0.30	0.40	0.50	0.60	0.70	0.80	0.90	1.00	1.10	1.20	1.30	1.40	1.50
4,800	BHP		0.98	1.07	1.16	1.24	1.34	1.47	1.59	1.69	1.78	1.87	1.96	2.06	2.18	2.30	2.42
	Discrete Spd Setting		B	B	B	B	A	A	A	A	A	A	A	C	C	C	C
	RPM		615	660	700	740	775	815	855	890	920	955	985	1015	1045	1075	1105
5,000	BHP	0.99	1.07	1.18	1.27	1.37	1.49	1.60	1.73	1.82	1.92	2.00	2.10	2.22	2.32	2.44	2.56
	Discrete Spd Setting	B	B	B	B	A	A	A	A	A	A	A	A	C	C	C	C
	RPM	594	635	680	720	760	795	830	870	900	935	965	1000	1030	1055	1085	1115
5,200	BHP	1.09	1.18	1.28	1.36	1.48	1.59	1.70	1.82	1.93	2.02	2.14	2.24	2.36	2.48	2.60	2.72
	Sheave/Mtr	B	B	B	B	A	A	A	A	A	A	A	C	C	C	C	C
	RPM	620	660	700	735	775	810	845	880	915	945	980	1010	1040	1070	1100	1130
5,400	BHP	1.19	1.29	1.39	1.48	1.59	1.70	1.80	1.92	2.03	2.16	2.26	2.38	2.50	2.62	2.74	2.87
	Discrete Spd Setting	B	B	B	A	A	A	A	A	A	A	A	C	C	C	C	C
	RPM	640	680	720	755	790	825	860	895	925	960	990	1020	1050	1080	1110	1140
5,600	BHP	1.30	1.40	1.51	1.62	1.74	1.85	1.95	2.08	2.18	2.31	2.42	2.57	2.71	2.86	2.98	3.12
	Sheave/Mtr	B	B	B	A	A	A	A	A	A	A	C	C	C	C	C	C
	RPM	660	700	740	775	810	845	875	910	940	975	1005	1035	1065	1095	1120	1150
5,800	BHP	1.41	1.52	1.63	1.73	1.84	1.95	2.06	2.18	2.32	2.44	2.57	2.72	2.86	3.00	3.15	3.27
	Discrete Spd Setting	B	B	A	A	A	A	A	A	A	A	C	C	C	C	C	C
	RPM	680	720	760	790	825	860	890	920	955	985	1015	1045	1075	1105	1135	1160
6,000	BHP	1.56	1.67	1.78	1.89	2.00	2.12	2.24	2.36	2.48	2.60	2.74	2.89	3.01	3.15	3.30	3.42
	Discrete Spd Setting	B	B	A	A	A	A	A	A	A	C	C	C	C	C	C	C
	RPM	700	740	775	810	845	880	910	940	970	1000	1030	1060	1085	1115	1145	1170
6,200	BHP	1.70	1.83	1.94	2.06	2.17	2.30	2.44	2.58	2.73	2.87	3.02	3.14	3.28	3.40	3.54	3.66
	Discrete Spd Setting	B	A	A	A	A	A	A	A	A	C	C	C	C	C	C	C
	RPM	720	760	795	830	865	895	925	955	985	1015	1045	1070	1100	1125	1155	1180
6,400	BHP	1.88	2.02	2.16	2.28	2.42	2.54	2.66	2.78	2.90	3.04	3.16	3.31	3.43	3.58	3.72	3.86
	Discrete Spd Setting	B	A	A	A	A	A	A	A	C	C	C	C	C	C	C	C
	RPM	745	780	815	845	880	910	940	970	1000	1030	1055	1085	1110	1140	1165	1190
6,600	BHP	2.06	2.18	2.32	2.46	2.58	2.70	2.82	2.94	3.07	3.19	3.34	3.46	3.60	3.74	3.88	4.02
	Discrete Spd Setting	A	A	A	A	A	A	A	A	C	C	C	C	C	C	C	C
	RPM	765	795	830	865	895	925	955	985	1015	1040	1070	1095	1125	1150	1175	1200
6,800	BHP	2.22	2.36	2.50	2.62	2.74	2.86	3.00	3.10	3.27	3.41	3.58	3.72	3.85	3.97	4.11	4.23
	Discrete Spd Setting	A	A	A	A	A	A	A	A	C	C	C	C	C	C	C	C
	RPM	780	815	850	880	910	940	970	1000	1030	1055	1085	1110	1135	1160	1190	1215

Notes:
- Motor Sheave set to 1-turn open from factory.
- Factory torque setting is A. Torque setting is field-adjustable to any torque setting listed in drive table through the Wireless Service Tool.
- The unit can control the blower through LAT control. Enable this setting in the field with the Wireless Service Tool.
- The maximum allowable altitude of installation for this product is 6,561 ft (2,000 m).

Table continued on next page.

Models:
SB
072-300

Blower Performance
SB192 with VFD

Table continued from previous page.

SCFM	ESP (in.w.c.)	0.00	0.10	0.20	0.30	0.40	0.50	0.60	0.70	0.80	0.90	1.00	1.10	1.20	1.30	1.40	1.50
7,000	BHP	2.40	2.54	2.66	2.80	2.92	3.04	3.14	3.27	3.39	3.54	3.66	3.78	3.96	4.12	4.28	4.44
	Discrete Spd Setting	A	A	A	A	A	A	A	C	C	C	C	C	C	C	C	C
	RPM	800	835	865	900	930	960	985	1015	1040	1070	1095	1120	1150	1175	1200	1225
7,200	BHP	2.58	2.70	2.85	2.99	3.14	3.28	3.42	3.54	3.66	3.81	3.93	4.06	4.22	4.38	4.54	4.70
	Discrete Spd Setting	A	A	A	A	A	A	C	C	C	C	C	C	C	C	C	C
	RPM	820	850	885	915	945	975	1005	1030	1055	1085	1110	1135	1160	1185	1210	1235
7,400	BHP	2.76	2.88	3.02	3.16	3.31	3.45	3.61	3.75	3.92	4.06	4.20	4.36	4.52	4.68	4.81	4.97
	Discrete Spd Setting	A	A	A	A	A	A	C	C	C	C	C	C	C	C	C	C
	RPM	840	870	900	930	960	990	1020	1045	1075	1100	1125	1150	1175	1200	1220	1245
7,600	BHP	2.94	3.07	3.22	3.36	3.50	3.63	3.82	3.98	4.14	4.34	4.50	4.66	4.78	4.94		
	Discrete Spd Setting	A	D	D	D	D	C	C	C	C	C	C	C	C	C		
	RPM	860	890	920	950	980	1005	1035	1060	1085	1115	1140	1165	1185	1210		
7,800	BHP	3.22	3.34	3.49	3.63	3.78	3.96	4.12	4.28	4.44	4.63	4.76	4.92				
	Discrete Spd Setting	A	A	A	A	A	C	C	C	C	C	C	C				
	RPM	880	905	935	965	995	1025	1050	1075	1100	1130	1150	1175				
8,000	BHP	3.41	3.58	3.75	3.92	4.06	4.26	4.42	4.58	4.74	4.90						
	Discrete Spd Setting	A	A	A	A	C	C	C	C	C	C						
	RPM	895	925	955	985	1010	1040	1065	1090	1115	1140						

Notes:
- Motor Sheave set to 1-turn open from factory.
- Factory torque setting is A. Torque setting is field-adjustable to any torque setting listed in drive table through the Wireless Service Tool.
- The unit can control the blower through LAT control. Enable this setting in the field with the Wireless Service Tool.
- The maximum allowable altitude of installation for this product is 6,561 ft (2,000 m).

Blower Performance SB240

Models:
SB
072-300

SCFM	ESP (in.w.c.)	0.00	0.10	0.20	0.30	0.40	0.50	0.60	0.70	0.80	0.90	1.00	1.10	1.20	1.30	1.40	1.50
6,000	BHP				1.78	1.89	2.00	2.12	2.24	2.36	2.48	2.60	2.74	2.89	3.01	3.15	3.30
	Sheave/Mtr				B	B	B	A	A	A	A	A	A	A	A	C	C
	RPM				775	810	845	880	910	940	970	1000	1030	1060	1085	1115	1145
6,200	BHP			1.82	1.93	2.04	2.15	2.30	2.44	2.58	2.73	2.87	2.99	3.14	3.26	3.40	3.52
	Sheave/Mtr			B	B	B	B	A	A	A	A	A	A	A	C	C	C
	RPM			755	790	825	860	895	925	955	985	1015	1040	1070	1095	1125	1150
6,400	BHP			2.00	2.14	2.26	2.40	2.52	2.64	2.76	2.88	3.02	3.14	3.28	3.40	3.56	3.70
	Sheave/Mtr			B	B	B	B	A	A	A	A	A	A	A	C	C	C
	RPM			775	810	840	875	905	935	965	995	1025	1050	1080	1105	1135	1160
6,600	BHP		2.02	2.16	2.30	2.42	2.56	2.68	2.80	2.92	3.05	3.17	3.29	3.43	3.55	3.71	3.85
	Sheave/Mtr		B	B	B	B	A	A	A	A	A	A	A	A	C	C	C
	RPM		755	790	825	855	890	920	950	980	1010	1035	1060	1090	1115	1145	1170
6,800	BHP		2.18	2.32	2.46	2.58	2.70	2.84	2.94	3.06	3.21	3.35	3.52	3.66	3.82	3.94	4.06
	Sheave/Mtr		B	B	B	B	A	A	A	A	A	A	A	C	C	C	C
	RPM		770	805	840	870	900	935	960	990	1020	1045	1075	1100	1130	1155	1180
7,000	BHP	2.22	2.34	2.48	2.62	2.74	2.86	2.98	3.10	3.22	3.34	3.49	3.61	3.73	3.90	4.06	4.22
	Sheave/Mtr	B	B	B	B	A	A	A	A	A	A	A	A	C	C	C	C
	RPM	755	785	820	855	885	915	945	975	1005	1030	1060	1085	1110	1140	1165	1190
7,200	BHP	2.38	2.52	2.64	2.78	2.92	3.06	3.21	3.35	3.47	3.62	3.74	3.88	4.00	4.16	4.32	4.48
	Sheave/Mtr	B	B	B	B	A	A	A	A	A	A	A	C	C	C	C	C
	RPM	770	805	835	870	900	930	960	990	1015	1045	1070	1100	1125	1150	1175	1200
7,400	BHP	2.56	2.68	2.82	2.95	3.09	3.24	3.38	3.53	3.67	3.84	3.98	4.12	4.26	4.42	4.58	4.74
	Sheave/Mtr	B	B	B	A	A	A	A	A	A	A	A	C	C	C	C	C
	RPM	790	820	855	885	915	945	975	1005	1030	1060	1085	1110	1135	1160	1185	1210
7,600	BHP	2.74	2.86	2.98	3.12	3.26	3.41	3.55	3.70	3.89	4.05	4.21	4.40	4.53	4.69	4.85	
	Sheave/Mtr	B	B	B	A	A	A	A	A	A	A	C	C	C	C	C	
	RPM	810	840	870	900	930	960	990	1015	1045	1070	1095	1125	1145	1170	1195	
7,800	BHP	2.98	3.13	3.25	3.39	3.54	3.68	3.83	3.99	4.15	4.34	4.50	4.66	4.82	4.95		
	Sheave/Mtr	B	B	A	A	A	A	A	A	A	C	C	C	C	C		
	RPM	830	860	885	915	945	975	1005	1030	1055	1085	1110	1135	1160	1180		
8,000	BHP	3.18	3.30	3.44	3.61	3.78	3.94	4.10	4.29	4.45	4.61	4.77	4.93				
	Sheave/Mtr	B	B	A	A	A	A	A	A	A	C	C	C				
	RPM	850	875	900	930	960	990	1015	1045	1070	1095	1120	1145				

Notes:
- A, 1 = Standard RPM/Standard Blower Motor
- E, 5 = High RPM/Large Blower Motor
- The maximum allowable altitude of installation for this product is 6,561 ft (2,000 m).

Table continued on next page.

Models:
SB
072-300

Blower Performance
SB240

Table continued from previous page.

SCFM	ESP (in.w.c.)	0.00	0.10	0.20	0.30	0.40	0.50	0.60	0.70	0.80	0.90	1.00	1.10	1.20	1.30	1.40	1.50
8,200	BHP	3.35	3.48	3.65	3.79	3.96	4.13	4.27	4.44	4.58	4.72	4.88					
	Sheave/Mtr	B	A	A	A	A	A	A	A	A	C	C					
	RPM	865	890	920	945	975	1005	1030	1060	1085	1110	1135					
8,400	BHP	3.62	3.74	3.89	4.03	4.18	4.33	4.49	4.65	4.81	4.97						
	Sheave/Mtr	A	A	A	A	A	A	A	A	C	C						
	RPM	880	905	935	965	995	1020	1045	1070	1095	1120						
8,600	BHP	3.81	3.98	4.12	4.29	4.46	4.62	4.78	4.94								
	Sheave/Mtr	A	A	A	A	A	A	A	A								
	RPM	895	925	950	980	1010	1035	1060	1085								
8,800	BHP	4.06	4.22	4.41	4.57	4.73	4.92										
	Sheave/Mtr	A	A	A	A	A	A										
	RPM	915	940	970	995	1020	1050										
9,000	BHP	4.38	4.54	4.70	4.86												
	Sheave/Mtr	A	A	A	A												
	RPM	935	960	985	1010												
9,200	BHP	4.65	4.76	4.90													
	Sheave/Mtr	A	A	A													
	RPM	955	975	1000													
9,400	BHP	4.83	4.94														
	Sheave/Mtr	A	A														
	RPM	970	990														
9,600	BHP																
	Sheave/Mtr																
	RPM																

Notes:
- A, 1 = Standard RPM/Standard Blower Motor
- E, 5 = High RPM/Large Blower Motor
- The maximum allowable altitude of installation for this product is 6,561 ft (2,000 m).

Blower Performance SB240 with VFD

Models:
SB
072-300

SCFM	ESP (in.w.c.)	0.00	0.10	0.20	0.30	0.40	0.50	0.60	0.70	0.80	0.90	1.00	1.10	1.20	1.30	1.40	1.50
6,000	BHP				1.78	1.89	2.00	2.12	2.24	2.36	2.48	2.60	2.74	2.89	3.01	3.15	3.30
	Discrete Spd Setting				B	B	B	A	A	A	A	A	A	A	A	C	C
	RPM				775	810	845	880	910	940	970	1000	1030	1060	1085	1115	1145
6,200	BHP			1.82	1.93	2.04	2.15	2.30	2.44	2.58	2.73	2.87	2.99	3.14	3.26	3.40	3.52
	Discrete Spd Setting			B	B	B	B	A	A	A	A	A	A	A	C	C	C
	RPM			755	790	825	860	895	925	955	985	1015	1040	1070	1095	1125	1150
6,400	BHP			2.00	2.14	2.26	2.40	2.52	2.64	2.76	2.88	3.02	3.14	3.28	3.40	3.56	3.70
	Discrete Spd Setting			B	B	B	B	A	A	A	A	A	A	A	C	C	C
	RPM			775	810	840	875	905	935	965	995	1025	1050	1080	1105	1135	1160
6,600	BHP		2.02	2.16	2.30	2.42	2.56	2.68	2.80	2.92	3.05	3.17	3.29	3.43	3.55	3.71	3.85
	Discrete Spd Setting		B	B	B	B	A	A	A	A	A	A	A	A	C	C	C
	RPM		755	790	825	855	890	920	950	980	1010	1035	1060	1090	1115	1145	1170
6,800	BHP		2.18	2.32	2.46	2.58	2.70	2.84	2.94	3.06	3.21	3.35	3.52	3.66	3.82	3.94	4.06
	Discrete Spd Setting		B	B	B	B	A	A	A	A	A	A	A	C	C	C	C
	RPM		770	805	840	870	900	935	960	990	1020	1045	1075	1100	1130	1155	1180
7,000	BHP	2.22	2.34	2.48	2.62	2.74	2.86	2.98	3.10	3.22	3.34	3.49	3.61	3.73	3.90	4.06	4.22
	Discrete Spd Setting	B	B	B	B	A	A	A	A	A	A	A	A	C	C	C	C
	RPM	755	785	820	855	885	915	945	975	1005	1030	1060	1085	1110	1140	1165	1190
7,200	BHP	2.38	2.52	2.64	2.78	2.92	3.06	3.21	3.35	3.47	3.62	3.74	3.88	4.00	4.16	4.32	4.48
	Discrete Spd Setting	B	B	B	B	A	A	A	A	A	A	A	C	C	C	C	C
	RPM	770	805	835	870	900	930	960	990	1015	1045	1070	1100	1125	1150	1175	1200
7,400	BHP	2.56	2.68	2.82	2.95	3.09	3.24	3.38	3.53	3.67	3.84	3.98	4.12	4.26	4.42	4.58	4.74
	Discrete Spd Setting	B	B	B	A	A	A	A	A	A	A	A	C	C	C	C	C
	RPM	790	820	855	885	915	945	975	1005	1030	1060	1085	1110	1135	1160	1185	1210
7,600	BHP	2.74	2.86	2.98	3.12	3.26	3.41	3.55	3.70	3.89	4.05	4.21	4.40	4.53	4.69	4.85	5.01
	Discrete Spd Setting	B	B	B	A	A	A	A	A	A	A	C	C	C	C	C	C
	RPM	810	840	870	900	930	960	990	1015	1045	1070	1095	1125	1145	1170	1195	1220
7,800	BHP	2.98	3.13	3.25	3.39	3.54	3.68	3.83	3.99	4.15	4.34	4.50	4.66	4.82	4.95	5.11	5.27
	Discrete Spd Setting	B	B	A	A	A	A	A	A	A	C	C	C	C	C	C	C
	RPM	830	860	885	915	945	975	1005	1030	1055	1085	1110	1135	1160	1180	1205	1230
8,000	BHP	3.18	3.30	3.44	3.61	3.78	3.94	4.10	4.29	4.45	4.61	4.77	4.93	5.09	5.25	5.38	5.54
	Discrete Spd Setting	B	B	A	A	A	A	A	A	A	C	C	C	C	C	C	C
	RPM	850	875	900	930	960	990	1015	1045	1070	1095	1120	1145	1170	1195	1215	1240

Notes:
- Motor Sheave set to 1-turn open from factory.
- Factory torque setting is A. Torque setting is field-adjustable to any torque setting listed in drive table through the Wireless Service Tool.
- The unit can control the blower through LAT control. Enable this setting in the field with the Wireless Service Tool.
- The maximum allowable altitude of installation for this product is 6,561 ft (2,000 m).

Table continued on next page.

Models:
SB
072-300

Blower Performance
SB240 with VFD

Table continued from previous page.

SCFM	ESP (in.w.c.)	0.00	0.10	0.20	0.30	0.40	0.50	0.60	0.70	0.80	0.90	1.00	1.10	1.20	1.30	1.40	1.50
8,200	BHP	3.35	3.48	3.65	3.79	3.96	4.13	4.27	4.44	4.58	4.72	4.88	5.08	5.24	5.44	5.64	
	Discrete Spd Setting	B	A	A	A	A	A	A	A	A	C	C	C	C	C	C	
	RPM	865	890	920	945	975	1005	1030	1060	1085	1110	1135	1160	1180	1205	1230	
8,400	BHP	3.62	3.74	3.89	4.03	4.18	4.33	4.49	4.65	4.81	4.97	5.16	5.36	5.56	5.72	5.92	
	Discrete Spd Setting	A	A	A	A	A	A	A	A	C	C	C	C	C	C	C	
	RPM	880	905	935	965	995	1020	1045	1070	1095	1120	1145	1170	1195	1215	1240	
8,600	BHP	3.81	3.98	4.12	4.29	4.46	4.62	4.78	4.94	5.10	5.28	5.48	5.64	5.84	6.04	6.20	
	Discrete Spd Setting	A	A	A	A	A	A	A	A	C	C	C	C	C	C	C	
	RPM	895	925	950	980	1010	1035	1060	1085	1110	1135	1160	1180	1205	1230	1250	
8,800	BHP	4.06	4.22	4.41	4.57	4.73	4.92	5.08	5.24	5.40	5.60	5.76	5.96	6.16	6.32		
	Discrete Spd Setting	A	A	A	A	A	A	A	C	C	C	C	C	C	C		
	RPM	915	940	970	995	1020	1050	1075	1100	1125	1150	1170	1195	1220	1240		
9,000	BHP	4.38	4.54	4.70	4.86	5.02	5.18	5.34	5.50	5.68	5.88	6.08	6.24				
	Sheave/Mtr	A	A	A	A	A	A	A	C	C	C	C	C				
	RPM	935	960	985	1010	1035	1060	1085	1110	1135	1160	1185	1205				
	Turns Open	4.5	4	3.5	3	2	1.5	1	3.5	3	2.5	2	1.5				
9,200	BHP	4.65	4.76	4.90	5.08	5.26	5.44	5.62	5.80	6.00	6.16						
	Discrete Spd Setting	A	A	A	A	A	A	C	C	C	C						
	RPM	955	975	1000	1025	1050	1075	1100	1125	1150	1170						
9,400	BHP	4.83	4.94	5.12	5.32	5.52	5.72	5.92	6.12	6.32	6.48						
	Discrete Spd Setting	A	A	A	A	A	A	C	C	C	C						
	RPM	970	990	1015	1040	1065	1090	1115	1140	1165	1185						
9,600	BHP	5.10	5.24	5.44	5.64	5.84	6.04	6.24	6.40								
	Discrete Spd Setting	A	A	A	A	A	C	C	C								
	RPM	985	1005	1030	1055	1080	1105	1130	1150								

Notes:
- Motor Sheave set to 1-turn open from factory.
- Factory torque setting is A. Torque setting is field-adjustable to any torque setting listed in drive table through the Wireless Service Tool.
- The unit can control the blower through LAT control. Enable this setting in the field with the Wireless Service Tool.
- The maximum allowable altitude of installation for this product is 6,561 ft (2,000 m).

Blower Performance SB300 with VFD

Models:
SB
072-300

SCFM	ESP (in.w.c.)	0.00	0.10	0.20	0.30	0.40	0.50	0.60	0.70	0.80	0.90	1.00	1.10	1.20	1.30	1.40	1.50
7,500	BHP	2.69	2.84	2.96	3.11	3.27	3.45	3.60	3.78	3.96	4.08	4.23	4.38	4.53	4.69	4.86	5.03
	Discrete Spd Setting	B	B	B	B	A	A	A	A	A	A	A	A	A	C	C	C
	RPM	890	925	955	990	1020	1050	1075	1105	1135	1155	1180	1205	1230	1255	1275	1295
7,800	BHP	2.87	3.04	3.18	3.36	3.54	3.72	3.87	4.05	4.20	4.35	4.50	4.65	4.80	4.97	5.14	5.30
	Discrete Spd Setting	B	B	B	A	A	A	A	A	A	A	A	A	C	C	C	C
	RPM	910	945	975	1010	1040	1070	1095	1125	1150	1175	1200	1225	1250	1270	1290	1310
8,100	BHP	3.10	3.26	3.42	3.60	3.78	3.96	4.14	4.34	4.52	4.70	4.88	5.06	5.21	5.35	5.53	5.68
	Discrete Spd Setting	B	B	B	A	A	A	A	A	A	A	A	C	C	C	C	C
	RPM	935	965	995	1025	1055	1085	1115	1145	1170	1195	1220	1245	1265	1285	1310	1330
8,400	BHP	3.36	3.52	3.74	3.92	4.14	4.36	4.57	4.75	4.93	5.11	5.29	5.47	5.62	5.80	5.94	6.12
	Discrete Spd Setting	B	B	A	A	A	A	A	A	A	A	A	C	C	C	C	C
	RPM	955	985	1020	1045	1075	1105	1135	1160	1185	1210	1235	1260	1280	1305	1325	1350
8,700	BHP	3.60	3.79	4.00	4.22	4.43	4.65	4.83	5.01	5.19	5.37	5.55	5.76	5.97	6.14	6.35	6.56
	Discrete Spd Setting	B	A	A	A	A	A	A	A	A	A	C	C	C	C	C	C
	RPM	975	1005	1035	1065	1095	1125	1150	1175	1200	1225	1250	1275	1300	1320	1345	1370
9,000	BHP	3.90	4.12	4.30	4.51	4.73	4.91	5.09	5.30	5.48	5.66	5.89	6.08	6.32	6.56	6.76	
	Discrete Spd Setting	A	A	A	A	A	A	A	A	A	C	C	C	C	C	C	
	RPM	1000	1030	1055	1085	1115	1140	1165	1195	1220	1245	1270	1290	1315	1340	1360	
9,300	BHP	4.34	4.56	4.74	4.96	5.14	5.35	5.53	5.71	5.89	6.08	6.29	6.50	6.67	6.88	7.05	
	Discrete Spd Setting	A	A	A	A	A	A	A	A	A	C	C	C	C	C	C	
	RPM	1020	1050	1075	1105	1130	1160	1185	1210	1235	1260	1285	1310	1330	1355	1375	
9,600	BHP	4.64	4.85	5.03	5.25	5.46	5.67	5.88	6.13	6.34	6.52	6.66	6.84	7.02	7.16		
	Discrete Spd Setting	A	A	A	A	A	A	A	A	C	C	C	C	C	C		
	RPM	1040	1070	1095	1125	1150	1175	1200	1230	1255	1280	1300	1325	1350	1370		
9,900	BHP	4.93	5.15	5.33	5.53	5.78	5.99	6.20	6.41	6.62	6.83	7.04	7.21	7.42			
	Discrete Spd Setting	A	A	A	A	A	A	A	C	C	C	C	C	C			
	RPM	1060	1090	1115	1140	1170	1195	1220	1245	1270	1295	1320	1340	1365			
10,200	BHP	5.36	5.57	5.77	5.95	6.17	6.35	6.53	6.74	6.94	7.18						
	Discrete Spd Setting	A	A	A	A	A	A	C	C	C	C						
	RPM	1085	1110	1135	1160	1190	1215	1240	1265	1285	1310						
10,500	BHP	5.52	5.75	5.99	6.23	6.47	6.71	6.95	7.19								
	Discrete Spd Setting	A	A	A	A	A	A	C	C								
	RPM	1100	1130	1155	1180	1205	1230	1255	1280								
10,800	BHP	6.00	6.24	6.48	6.72	6.96	7.20	7.39	7.63								
	Discrete Spd Setting	A	A	A	A	A	C	C	C								
	RPM	1125	1150	1175	1200	1225	1250	1270	1295								

Notes:
- Motor Sheave set to 1-turn open from factory.
- Factory torque setting is A. Torque setting is field-adjustable to any torque setting listed in drive table through the Wireless Service Tool
- The unit can control the blower through LAT control. Enable this setting in the field with the Wireless Service Tool.
- The maximum allowable altitude of installation for this product is 6,561 ft (2,000 m).

Models:
SB
072-300

Operating Limits and Commissioning Conditions

OPERATING LIMITS

Environment – Units are designed for indoor installation only. Never install units in areas subject to freezing or where humidity levels could cause cabinet condensation (such as unconditioned spaces subject to 100% outside air).

Power Supply – Voltage utilization shall comply with AHRI Standard 110 or values provided in the electrical data tables.

Three factors determine the operating limits of water source heat pumps: return air temperature, water temperature, and ambient temperature. When any one of these factors is at minimum or maximum levels, the other two factors should be at normal levels to ensure proper unit operation. Extreme variations in temperature and humidity and/or corrosive water or air will adversely affect unit performance, reliability, and service life.

COMMISSIONING CONDITIONS

Starting conditions vary depending upon model and are based upon the following notes:

NOTES:

1. Commissioning Conditions are not normal or continuous operating conditions. Minimum/maximum limits are startup conditions to bring the building space up to occupancy temperatures. Units are not designed to operate under these conditions on a regular basis.
2. Voltage utilization range complies with AHRI Standard 110.

Table 8: Operating Limits

Operating Limits	Cooling	Heating
Air Limits		
Min. ambient air, DB[1 3]	10°F [-12°C]	10°F [-12°C]
Max. ambient air, DB[3]	130°F [54.4°C]	130°F [54.4°C]
Min. entering air, DB/WB	60/50°F [16/10°C]	50°F [10°C]
Max. entering air, DB/WB	90/73°F [32/23°C]	80°F [27°C]
Min/Max Airflow (CFM/Ton)[2]	300 to 500 CFM/Ton	
Water Limits		
Min. entering water (072-120)[1]	30°F [-1°C]	20°F [-6.7°C]
Min. entering water (168-300)[1]	30°F [-1°C]	30°F [-1°C]
Operating range	50-110°F [10-43°C]	30-70°F [-1 to 21°C]
Max. entering water	120°F [49°C]	90°F [32°C]
Water Flow Range[3]	1.5 to 3.0 gpm/ton [1.6 to 3.2 l/m per kW]	

Notes:
1. Circulating fluid shall be protected to ensure that freezing will not occur when not in operation.
2. All information is provided at rated cfm (400cfm/ton).
3. For units equipped with flow-control automation, cooling & heating min/max ambient temps are 15°F (-9°C) / 120°F (49°C).

Unit Maximum Water Working Pressure

Configuration	Max Pressure PSIG [kPa]
Base Unit	300 [2,068]
MWV	200 [1,379]
MOD Valve	200 [1,379]

Use the lowest maximum pressure rating when multiple options are combined.

Table 9: Commissioning Conditions

Commissioning Conditions	Cooling	Heating
Air Limits		
Min. ambient air, DB[1 3]	10°F [-12°C]	10°F [-12°C]
Max. ambient air, DB[3]	130°F [54°C]	130°F [54°C]
Min. entering air, DB/WB	60/50°F [16/10°C]	**50°F [10°C]
Max. entering air, DB/WB	*90/73°F [32/23°C]	80°F [27°C]
Min/Max Airflow (CFM/Ton)[2]	300 to 500 CFM/Ton	
Water Limits		
Min. entering water (072-120)[1]	30°F [-6.7°C]	20°F [-6.7°C]
Min. entering water (168-300)[1]	30°F [-1°C]	30°F [-1°C]
Operating range	50-110°F [10-43°C]	30-70°F [-1 to 21°C]
Max. entering water	120°F [49°C]	90°F [32°C]
Water Flow Range[3]	1.5 to 3.0 gpm/ton [1.6 to 3.2 l/m per kW]	

Notes:
1. Circulating fluid shall be protected to ensure that freezing will not occur when not in operation.
2. All information is provided at rated cfm (400cfm/ton).
3. For units equipped with flow-control automation, cooling & heating min/max ambient temps are 15°F (-9°C) / 120°F (49°C).

* Commission units for cooling at entering air temperatures of 100/75°F [38/24°C] only at rated water flow or 3 gpm/ton.

** Commission units for heating at entering air temperature of 40°F [4.4°C] only at rated water flow or 3 gpm/ton.

Piping System Cleaning and Flushing

Models:
SB
072-300

PIPING SYSTEM CLEANING AND FLUSHING

Cleaning and flushing the WLHP piping system is the single most important step to ensure proper startup and continued efficient operation of the system.

Follow the instructions below to properly clean and flush the system:

1. Ensure that electrical power to the unit is disconnected.
2. Install the system with the supply hose connected directly to the return riser valve. Use a single length of flexible hose.
3. Fill the system with water. DO NOT allow system to overflow. Bleed all air from the system. Pressurize and check the system for leaks and repair as appropriate. Models with Waterside Economizer also manually open economizer valve and coil air vents (2) to bleed air from coil.
4. Verify that all strainers are in place (ClimateMaster recommends a strainer with a #20 stainless steel wire mesh). Start the pumps, and systematically check each vent to ensure that all air is bled from the system.
5. Verify that make-up water is available. Adjust make-up water as required to replace the air which was bled from the system. Check and adjust the water/air level in the expansion tank.
6. Set the boiler to raise the loop temperature to approximately 86°F [30°C]. Open a drain at the lowest point in the system. Adjust the make-up water replacement rate to equal the rate of bleed.
7. Refill the system and add trisodium phosphate in a proportion of approximately one pound per 150 gallons (0.8 kg per 1000 l) of water (or other equivalent approved cleaning agent) Reset the boiler to raise the loop temperature to 100°F (38°C). Circulate the solution for a minimum of 8 to 24 hours. At the end of this period, shut off the circulating pump and drain the solution. Repeat system cleaning if desired.
8. When the cleaning process is complete, remove the short-circuited hoses. Reconnect the hoses to the proper supply, and return the connections to each of the units. Refill the system and bleed off all air.
9. Test the system pH with litmus paper. The system water should be in the range of pH 6.0 - 8.5 (see table 3). Add chemicals, as appropriate to maintain neutral pH levels.
10. When the system is successfully cleaned, flushed, refilled and bled, check the main system panels, safety cutouts and alarms. Set the controls to properly maintain loop temperatures.

⚠ CAUTION

DO NOT use "Stop Leak" or similar chemical agent in this system. Addition of chemicals of this type to the loop water will foul the heat exchanger and inhibit unit operation.

NOTE: The manufacturer strongly recommends all piping connections, both internal and external to the unit, be pressure tested by an appropriate method prior to any finishing of the interior space or before access to all connections is limited. Test pressure may not exceed the maximum allowable pressure for the unit and all components within the water system. The manufacturer will not be responsible or liable for damages from water leaks due to inadequate or lack of a pressurized leak test, or damages caused by exceeding the maximum pressure rating during installation.

⚠ WARNING

Polyolester Oil, commonly known as POE oil, is a synthetic oil used in many refrigeration systems including those with R-454B refrigerant. POE oil, if it ever comes in contact with PVC or CPVC piping, may cause failure of the PVC/CPVC. PVC/CPVC piping should never be used as supply or return water piping with water-source heat pump products containing R-454B as system failures and property damage may result.

Models:
SB
072-300

Unit and System Checkout

UNIT CHECKOUT

BEFORE POWERING SYSTEM, please check the following:

- ☐ **Line voltage and wiring:** Verify that voltage is within an acceptable range for the unit and wiring and fuses/breakers are properly sized. Verify that low voltage wiring is complete.
- ☐ **Unit control transformer:** Ensure that transformer has the properly selected voltage tap.
- ☐ **Balancing/shutoff valves:** Ensure that all isolation valves are open (after system flushing - see System Checkout) and water control valves are wired.
- ☐ **Entering water and air:** Ensure that entering water and air temperatures are within operating limits of Table 8.
- ☐ **Low water temperature cutout:** Verify that low water temperature cut-out on the CXM2 is properly set.
- ☐ **Unit blower wheel:** Manually rotate blower wheel to verify free rotation and ensure that all blower wheels are secured to the blower motor shaft and centered in housing.
- ☐ **Blower motor:** Verify motor bolts are tight. DO NOT oil motors upon startup. Fan motors are pre-oiled at the factory.
- ☐ Ensure shaft pillow blocks, sheave, and pulley are tight
- ☐ **Sheave:** Verify sheave has been set to turns in design requirement. Record turns on start up log sheet.
- ☐ **Belt:** Verify belt is straight and proper tension
- ☐ **Condensate line:** Verify that condensate line is open, trapped, vented and properly pitched toward drain.
- ☐ **Water flow balancing:** Record inlet and outlet water temperatures for each heat pump upon startup. This check can eliminate nuisance trip outs and high velocity water flow that could erode heat exchangers.
- ☐ **Unit air coil and filters:** Ensure that filter is clean and accessible. Clean air coil of all manufacturing oils.
- ☐ **Unit controls:** Verify that CXM2 field-selection options are properly set.

SYSTEM CHECKOUT

- ☐ **System water temperature:** Check water temperature for proper range and also verify heating and cooling setpoints for proper operation.
- ☐ **System pH:** Check and adjust water pH if necessary to maintain a level between 6 and 8.5. Proper pH promotes longevity of hoses and fittings (see Table 4).
- ☐ **System flushing:** Verify that all hoses are connected end to end when flushing to ensure that debris bypasses the unit heat exchanger, water valves and other components. Water used in the system must be potable quality initially and clean of dirt, piping slag, and strong chemical cleaning agents. Verify that all air is purged from the system. Air in the system can cause poor operation or system corrosion.
- ☐ **Cooling tower/boiler:** Check equipment for proper setpoints and operation.
- ☐ **Standby pumps:** Verify that the standby pump is properly installed and in operating condition.
- ☐ **System controls:** Verify that system controls function and operate in the proper sequence.
- ☐ **Low water temperature cutout:** Verify that low water temperature cut-out controls are provided for the outdoor portion of the loop. Otherwise, operating problems may occur.
- ☐ **System control center:** Verify that the control center and alarm panel have appropriate setpoints and are operating as designed.
- ☐ **Miscellaneous:** Note any questionable aspects of the installation.

⚠ CAUTION

Verify that ALL water control valves are open and allow water flow prior to engaging the compressor. Freezing of the coax or water lines can permanently damage the heat pump.

⚠ CAUTION

To avoid equipment damage, DO NOT leave system filled in a building without heat during the winter unless antifreeze is added to the water loop. Heat exchangers never fully drain by themselves and will freeze unless winterized with antifreeze.

Unit Startup Procedure

Models:
SB
072-300

1. Turn the thermostat fan position to "ON". Blower should start.
2. Balance air flow at registers.
3. Adjust all valves to their full open positions. Turn on the line power to all heat pumps.
4. Room temperature should be within the minimum-maximum ranges of Table 8. During startup checks, loop water temperature entering the heat pump should be between 60°F (16°C) and 95°F (35°C).
5. Three factors determine the operating limits of the manufacturer's heat pumps: return air temperature, water temperature, and ambient temperature. When any one of these factors is at a minimum or maximum level, the other factor must be at normal level to ensure proper unit operation.

   a. Adjust the unit thermostat to the warmest setting. Place the thermostat mode switch in the "COOL" position. Slowly reduce thermostat setting until the compressor activates.

   b. Check for cool air delivery at the unit grille within a few minutes after the unit has begun to operate.

      NOTE: Units have a five minute time delay in the control circuit that can be eliminated on the CXM2 Communicating Controls as shown in Figure 18. See controls description for details.

   c. Verify that the compressor is on and that the water flow rate is correct by measuring pressure drop through the heat exchanger using the P/T plugs and comparing to Table 10.

   d. Check the elevation and cleanliness of the condensate lines. Dripping may be a sign of a blocked line. Check that the condensate trap is filled to provide a water seal. Check the temperature of both entering and leaving water. If temperature is within range table, proceed with the test. If temperature is outside of the operating range, check refrigerant pressures and compare to Table 10. Verify correct water flow by comparing unit pressure drop across the heat exchanger versus the data in Table 10.

      Heat of rejection (HR) can be calculated and compared to submittal data capacity pages. The formula for HR for systems with water is as follows:

      HR (Btuh) = TD x GPM x 500

      where TD is the temperature difference between the entering and leaving water, and GPM is the flow rate in U.S. GPM, determined by comparing the pressure drop across the heat exchanger to table 10. In S-I units, the formula is as follows:

      HR (kW) = TD x l/s x 4.18

   e. Check air temperature drop across the air coil when compressor is operating. Air temperature drop should be between 15°F and 25°F (8°C and 14°C).

   f. Turn thermostat to "OFF" position. A hissing noise indicates proper functioning of the reversing valve.

6. Allow fifteen minutes between tests for pressure to equalize before beginning heating test.

   a. Adjust the thermostat to the lowest setting Place the thermostat mode switch in the "HEAT" position.

   b. Slowly raise the thermostat to a higher temperature until the compressor activates.

   c. Check for warm air delivery within a few minutes after the unit has begun to operate.

   d. Refer to Table 12. Check the temperature of both entering and leaving water. If temperature is within range, proceed with the test. If temperature is outside of the operating range, check refrigerant pressures and compare to Table 10. Verify correct water flow by comparing unit pressure drop across the heat exchanger versus the data in Table 10. Heat of extraction (HE) can be calculated and compared to submittal data capacity pages.

Models:
SB
072-300

Unit Startup Procedure

The formula for HE for systems with water is as follows:

HE (Btuh) = TD x GPM x 500

where TD is the temperature difference between the entering and leaving water, and GPM is the flow rate in U.S. GPM, determined by comparing the pressure drop across the heat exchanger to Table 10. In S-I units, the formula is as follows:

HE (kW) = TD x l/s x 4.18.

e. Check air temperature rise across the air coil when compressor is operating. Air temperature rise should be between 20°F and 30°F (11°C and 17°C).

f. Check for vibration, noise, and water leaks.

7. If unit fails to operate, perform troubleshooting analysis (see troubleshooting section). If the check described fails to reveal the problem and the unit still does not operate, contact a trained service technician to ensure proper diagnosis and repair of the equipment.

8. When testing is complete, set system to maintain desired comfort level.

9. **BE CERTAIN TO FILL OUT AND FORWARD ALL WARRANTY REGISTRATION PAPERS TO CLIMATEMASTER.**

NOTE: If performance during any mode appears abnormal, refer to the CXM2 section or troubleshooting section of this manual. To obtain maximum performance, the air coil should be cleaned before startup. A 10% solution of dishwasher detergent and water is recommended.

⚠ WARNING

When the disconnect switch is closed, high voltage is present in some areas of the electrical panel. Exercise caution when working with energized equipment.

⚠ CAUTION

Verify that ALL water control valves are open and allow water flow prior to engaging the compressor. Freezing of the coax or water lines can permanently damage the heat pump.

Figure 20: Test Mode Button

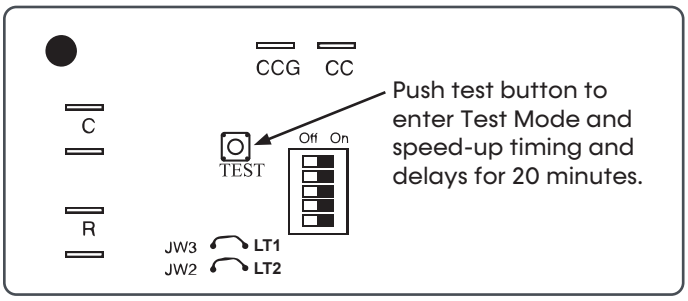

Table 10: Water Pressure Drop

Model	GPM	Pressure Drop (psi)				
		30°F[1]	50°F	70°F	90°F	110°F
072	9	1.7	1.2	1.0	0.9	0.9
	13.5	3.3	2.4	2.0	2.0	1.8
	18	5.1	3.9	3.4	3.2	3.1
096	12	2.6	2.1	1.9	1.8	1.7
	18	5.4	4.6	4.1	3.8	3.7
	24	8.3	7.1	6.4	5.9	5.6
120	15	2.8	2.6	2.5	2.4	2.3
	22.5	5.9	5.3	5.0	4.7	4.5
	30	9.0	8.0	7.5	7.1	6.7
168	21	1.4	1.3	1.2	1.1	1.1
	31.5	2.7	2.5	2.3	2.2	2.1
	42	4.5	4.1	3.8	3.7	3.6
192	24	2.2	2.0	2.0	1.9	1.8
	36	4.8	4.4	4.2	4.0	3.9
	48	7.4	6.7	6.4	6.2	5.9
240	30	1.8	1.6	1.5	1.4	1.3
	45	4.2	3.6	3.4	3.2	3.1
	60	6.5	5.7	5.3	5.0	4.8
300	37.5	2.4	2.0	1.8	1.7	1.6
	56.25	5.4	4.5	4.0	3.8	3.6
	75	8.4	7.0	6.3	5.9	5.7

1. Based on 20% methanol antifreeze solution.

Unit Startup Procedure

Models:
SB
072-300

Table 11: Motorized Water Valve and Modulating Valve Adders

Size	Flow	MWV					MOD Valve				
		C_v	Close Off Pressure	MOPD	Pressure Drop		C_v	Close Off Pressure	MOPD	Pressure Drop	
					PSI	FT				PSI	FT
072	9.00	37	200	50	0.06	0.1	10	200	50	0.81	1.9
	13.50				0.13	0.3				1.82	4.2
	18.00				0.24	0.5				3.24	7.5
096	12.00	37	200	50	0.11	0.2	10	200	50	1.44	3.3
	18.00				0.24	0.5				3.24	7.5
	24.00				0.42	1.0				5.76	13.3
120	15.00	37	200	150	0.16	0.4	19	200	50	0.62	1.4
	22.50				0.37	0.9				1.40	3.2
	30.00				0.66	1.5				2.49	5.8
168	21.00	37	200	150	0.32	0.7	29	200	50	0.52	1.2
	31.50				0.72	1.7				1.18	2.7
	42.00				1.29	3.0				2.10	4.8
192	24.00	37	200	150	0.42	1.0	29	200	50	0.68	1.6
	36.00				0.95	2.2				1.54	3.6
	48.00				1.68	3.9				2.74	6.3
240	30.00	37	200	150	0.66	1.5	29	200	50	1.07	2.5
	45.00				1.48	3.4				2.41	5.6
	60.00				2.63	6.1				4.28	9.9
300	37.50	57	200	150	0.43	1.0	29	200	50	1.67	3.9
	56.25				0.97	2.2				3.76	8.7
	75.00				1.73	4.0				6.69	15.4

PSI values are calculated based on manufacturer-recommended 70°F entering water temperature.

Models:
SB
072-300

Unit Operating Conditions

Operating Pressure/Temperature tables include the following notes:

- Entering air is based upon 70°F (21°C) DB in heating and 80/67°F (27/19°C) in cooling
- Subcooling is based on head pressure reading taken at the compressor discharge service port and line temperature reading on the discharge line by the compressor discharge service port.
- Cooling air and water values can vary greatly with changes in humidity level
- For operation in the shaded area, when water is used in lieu of antifreeze, the LWT must be calculated. Flow must be maintained to a level such that the LWT is maintained above 42°F (5.6°C).

Table 12: SB Series Typical Unit Operating Pressures and Temperatures

SB 072	Entering Water Temp (°F)	Water Flow GPM/ ton	CKT1 Discharge Pressure CKT1 (PSIG)	CKT1 Suction Pressure CKT1 (PSIG)	CKT1 Superheat CKT1 (°F)	CKT1 Subcooling CKT1 (°F)	CKT2 Discharge Pressure CKT2 (PSIG)	CKT2 Suction Pressure CKT2 (PSIG)	CKT2 Superheat CKT2 (°F)	CKT2 Subcooling CKT2 (°F)	Water Temp Rise (°F)	Air Temp Drop (°F) DB	Water Temp Drop (°F)"	Air Temp Rise (°F) DB
Full Load Cooling	30*	9	162 - 182	107 - 117	17 - 21	13 - 17	152 - 172	100 - 110	13 - 17	13 - 17	19 - 21	19 - 25		
		13.5	152 - 172	105 - 115	16 - 20	14 - 18	142 - 162	99 - 109	11 - 15	14 - 18	14 - 16	19 - 25		
		18	142 - 162	103 - 113	14 - 18	15 - 19	133 - 153	99 - 109	9 - 13	15 - 19	10 - 12	18 - 24		
	50	9	220 - 240	116 - 126	15 - 19	9 - 13	210 - 230	110 - 120	10 - 14	9 - 13	19 - 21	18 - 24		
		13.5	207 - 227	114 - 124	13 - 17	10 - 14	197 - 217	108 - 118	9 - 13	10 - 14	14 - 16	18 - 24		
		18	193 - 213	112 - 122	12 - 16	12 - 16	184 - 204	105 - 115	8 - 12	12 - 16	9 - 11	18 - 24		
	70	9	295 - 315	123 - 133	14 - 18	7 - 11	283 - 303	118 - 128	8 - 12	7 - 11	19 - 21	17 - 23		
		13.5	277 - 297	122 - 132	12 - 16	8 - 12	267 - 287	115 - 125	7 - 11	8 - 12	14 - 16	17 - 23		
		18	260 - 280	120 - 130	10 - 14	9 - 13	251 - 271	113 - 123	7 - 11	9 - 13	9 - 11	17 - 23		
	90	9	382 - 402	129 - 139	15 - 19	6 - 10	368 - 388	124 - 134	7 - 11	6 - 10	18 - 20	16 - 22		
		13.5	363 - 383	128 - 138	12 - 16	6 - 10	351 - 371	123 - 133	6 - 10	6 - 10	14 - 16	16 - 22		
		18	343 - 363	127 - 137	10 - 14	7 - 11	333 - 353	121 - 131	5 - 9	7 - 11	9 - 11	16 - 22		
	120	9	535 - 555	136 - 146	17 - 21	5 - 9	518 - 538	133 - 143	6 - 10	5 - 9	18 - 20	14 - 20		
		13.5	515 - 535	135 - 145	15 - 19	5 - 9	500 - 520	132 - 142	5 - 9	5 - 9	13 - 15	14 - 20		
		18	495 - 515	134 - 144	13 - 17	5 - 9	482 - 502	130 - 140	4 - 8	5 - 9	8 - 10	15 - 21		
Full Load Heating	30*	9	265 - 285	60 - 70	8 - 12	6 - 10	259 - 279	60 - 70	8 - 12	6 - 10			8 - 10	18 - 24
		13.5	268 - 288	63 - 73	8 - 12	6 - 10	262 - 282	63 - 73	9 - 13	6 - 10			6 - 8	18 - 24
		18	271 - 291	66 - 76	8 - 12	6 - 10	265 - 285	66 - 76	9 - 13	6 - 10			4 - 6	19 - 25
	50	9	292 - 312	87 - 97	12 - 16	8 - 12	284 - 304	85 - 95	5 - 9	8 - 12			11 - 13	24 - 30
		13.5	296 - 316	90 - 100	12 - 16	9 - 13	288 - 308	89 - 99	6 - 10	9 - 13			8 - 10	25 - 31
		18	300 - 320	94 - 104	12 - 16	9 - 13	292 - 312	92 - 102	6 - 10	9 - 13			5 - 7	26 - 32
	70	9	318 - 338	112 - 122	12 - 16	11 - 15	309 - 329	110 - 120	5 - 9	11 - 15			14 - 16	30 - 36
		13.5	324 - 344	117 - 127	12 - 16	12 - 16	314 - 334	115 - 125	5 - 9	12 - 16			10 - 12	31 - 37
		18	329 - 349	123 - 133	13 - 17	12 - 16	319 - 339	119 - 129	5 - 9	12 - 16			7 - 9	32 - 38
	90	9	344 - 364	139 - 149	12 - 16	14 - 18	334 - 354	136 - 146	4 - 8	14 - 18			17 - 19	35 - 41
		13.5	351 - 371	146 - 156	12 - 16	16 - 20	340 - 360	142 - 152	4 - 8	16 - 20			13 - 15	36 - 42
		18	358 - 378	153 - 163	12 - 16	17 - 21	347 - 367	149 - 159	4 - 8	17 - 21			9 - 11	37 - 43
	120	9												
		13.5												
		18												

* Based on 20% Methanol antifreeze solution.

Unit Operating Conditions

Models:
SB
072-300

SB 096	Entering Water Temp (°F)	Water Flow GPM/ ton	CKT1 Discharge Pressure CKT1 (PSIG)	CKT1 Suction Pressure CKT1 (PSIG)	CKT1 Superheat CKT1 (°F)	CKT1 Subcooling CKT1 (°F)	CKT2 Discharge Pressure CKT2 (PSIG)	CKT2 Suction Pressure CKT2 (PSIG)	CKT2 Superheat CKT2 (°F)	CKT2 Subcooling CKT2 (°F)	Water Temp Rise (°F)	Air Temp Drop (°F) DB	Water Temp Drop (°F)"	Air Temp Rise (°F) DB
Full Load Cooling	30*	12	167 - 187	106 - 116	16 - 20	12 - 16	161 - 181	106 - 116	5 - 9	12 - 16	20 - 22	20 - 26		
		18	155 - 175	104 - 114	14 - 18	13 - 17	150 - 170	104 - 114	3 - 7	13 - 17	15 - 17	20 - 26		
		24	144 - 164	101 - 111	11 - 15	13 - 17	139 - 159	101 - 111	1 - 5	13 - 17	10 - 12	20 - 26		
	50	12	217 - 237	115 - 125	15 - 19	9 - 13	210 - 230	113 - 123	11 - 15	9 - 13	21 - 23	19 - 25		
		18	202 - 222	112 - 122	13 - 17	10 - 14	197 - 217	111 - 121	9 - 13	10 - 14	15 - 17	19 - 25		
		24	188 - 208	110 - 120	12 - 16	11 - 15	183 - 203	109 - 119	7 - 11	11 - 15	10 - 12	19 - 25		
	70	12	284 - 304	122 - 132	15 - 19	8 - 12	276 - 296	120 - 130	11 - 15	8 - 12	21 - 23	18 - 24		
		18	266 - 286	120 - 130	13 - 17	8 - 12	260 - 280	118 - 128	9 - 13	8 - 12	15 - 17	18 - 24		
		24	249 - 269	118 - 128	11 - 15	9 - 13	244 - 264	117 - 127	7 - 11	9 - 13	10 - 12	18 - 24		
	90	12	367 - 387	128 - 138	15 - 19	6 - 10	357 - 377	126 - 136	10 - 14	6 - 10	20 - 22	17 - 23		
		18	347 - 367	126 - 136	12 - 16	6 - 10	339 - 359	125 - 135	8 - 12	6 - 10	15 - 17	17 - 23		
		24	327 - 347	125 - 135	10 - 14	7 - 11	321 - 341	124 - 134	6 - 10	7 - 11	10 - 12	17 - 23		
	120	12	519 - 539	135 - 145	17 - 21	4 - 8	508 - 528	133 - 143	22 - 26	4 - 8	19 - 21	15 - 21		
		18	497 - 517	134 - 144	14 - 18	5 - 9	488 - 508	132 - 142	20 - 24	5 - 9	14 - 16	15 - 21		
		24	476 - 496	134 - 144	12 - 16	5 - 9	468 - 488	132 - 142	17 - 21	5 - 9	9 - 11	15 - 21		
Full Load Heating	30*	12	274 - 294	58 - 68	14 - 18	8 - 12	268 - 288	57 - 67	12 - 16	8 - 12			6 - 8	19 - 25
		18	272 - 292	57 - 67	13 - 17	8 - 12	267 - 287	55 - 65	11 - 15	8 - 12			7 - 9	19 - 25
		24	270 - 290	55 - 65	13 - 17	7 - 11	265 - 285	54 - 64	11 - 15	7 - 11			7 - 9	18 - 24
	50	12	299 - 319	80 - 90	16 - 20	9 - 13	293 - 313	79 - 89	14 - 18	9 - 13			11 - 13	25 - 31
		18	304 - 324	84 - 94	16 - 20	10 - 14	299 - 319	83 - 93	14 - 18	10 - 14			8 - 10	26 - 32
		24	309 - 329	89 - 99	16 - 20	10 - 14	304 - 324	88 - 98	14 - 18	10 - 14			6 - 8	27 - 33
	70	12	330 - 350	107 - 117	16 - 20	11 - 15	324 - 344	107 - 117	14 - 18	11 - 15			15 - 17	31 - 37
		18	337 - 357	114 - 124	16 - 20	11 - 15	331 - 351	114 - 124	14 - 18	11 - 15			11 - 13	32 - 38
		24	344 - 364	120 - 130	16 - 20	12 - 16	339 - 359	121 - 131	13 - 17	12 - 16			8 - 10	34 - 40
	90	12	364 - 384	139 - 149	14 - 18	13 - 17	358 - 378	140 - 150	11 - 15	13 - 17			19 - 21	38 - 44
		18	372 - 392	147 - 157	14 - 18	14 - 18	367 - 387	148 - 158	10 - 14	14 - 18			14 - 16	39 - 45
		24	381 - 401	155 - 165	13 - 17	15 - 19	375 - 395	157 - 167	9 - 13	15 - 19			10 - 12	41 - 47
	120	12												
		18												
		24												

* Based on 20% Methanol antifreeze solution.

Models:
SB
072-300

Unit Operating Conditions

SB 120	Entering Water Temp (°F)	Water Flow GPM/ ton	CKT1 Discharge Pressure CKT1 (PSIG)	CKT1 Suction Pressure CKT1 (PSIG)	CKT1 Superheat CKT1 (°F)	CKT1 Subcooling CKT1 (°F)	CKT2 Discharge Pressure CKT2 (PSIG)	CKT2 Suction Pressure CKT2 (PSIG)	CKT2 Superheat CKT2 (°F)	CKT2 Subcooling CKT2 (°F)	Water Temp Rise (°F)	Air Temp Drop (°F) DB	Water Temp Drop (°F)"	Air Temp Rise (°F) DB
Full Load Cooling	30*	15	184 - 204	93 - 103	34 - 38	18 - 22	188 - 208	91 - 101	32 - 36	18 - 22	23 - 25	17 - 23		
		22.5	163 - 183	86 - 96	29 - 33	25 - 29	167 - 187	82 - 92	16 - 20	25 - 29	16 - 18	15 - 21		
		30	141 - 161	78 - 88	25 - 29	31 - 35	145 - 165	73 - 83	0 - 4	31 - 35	9 - 11	14 - 20		
	50	15	226 - 246	107 - 117	22 - 26	13 - 17	229 - 249	106 - 116	20 - 24	13 - 17	21 - 23	18 - 24		
		22.5	209 - 229	100 - 110	21 - 25	18 - 22	212 - 232	101 - 111	15 - 19	18 - 22	15 - 17	17 - 23		
		30	193 - 213	93 - 103	20 - 24	23 - 27	195 - 215	96 - 106	9 - 13	23 - 27	9 - 11	16 - 22		
	70	15	290 - 310	115 - 125	18 - 22	9 - 13	293 - 313	115 - 125	16 - 20	9 - 13	20 - 22	17 - 23		
		22.5	274 - 294	111 - 121	17 - 21	12 - 16	276 - 296	113 - 123	14 - 18	12 - 16	15 - 17	17 - 23		
		30	257 - 277	106 - 116	16 - 20	15 - 19	259 - 279	110 - 120	12 - 16	15 - 19	9 - 11	17 - 23		
	90	15	374 - 394	120 - 130	19 - 23	6 - 10	379 - 399	121 - 131	16 - 20	6 - 10	20 - 22	16 - 22		
		22.5	355 - 375	118 - 128	16 - 20	7 - 11	358 - 378	120 - 130	14 - 18	7 - 11	15 - 17	16 - 22		
		30	335 - 355	117 - 127	14 - 18	9 - 13	338 - 358	119 - 129	12 - 16	9 - 13	9 - 11	16 - 22		
	120	15	529 - 549	126 - 136	20 - 24	3 - 7	535 - 555	126 - 136	19 - 23	3 - 7	19 - 21	14 - 20		
		22.5	506 - 526	126 - 136	18 - 22	4 - 8	511 - 531	127 - 137	16 - 20	4 - 8	14 - 16	15 - 21		
		30	483 - 503	126 - 136	15 - 19	5 - 9	487 - 507	127 - 137	13 - 17	5 - 9	9 - 11	15 - 21		
Full Load Heating	30*	15	278 - 298	51 - 61	16 - 20	5 - 9	277 - 297	50 - 60	14 - 18	5 - 9			8 - 10	19 - 25
		22.5	281 - 301	54 - 64	17 - 21	5 - 9	281 - 301	53 - 63	14 - 18	5 - 9			6 - 8	20 - 26
		30	285 - 305	57 - 67	17 - 21	5 - 9	285 - 305	56 - 66	15 - 19	5 - 9			4 - 6	20 - 26
	50	15	313 - 333	78 - 88	18 - 22	4 - 8	312 - 332	76 - 86	15 - 19	4 - 8			11 - 13	26 - 32
		22.5	318 - 338	82 - 92	18 - 22	4 - 8	318 - 338	81 - 91	15 - 19	4 - 8			8 - 10	27 - 33
		30	324 - 344	86 - 96	17 - 21	4 - 8	324 - 344	85 - 95	15 - 19	4 - 8			5 - 7	28 - 34
	70	15	346 - 366	106 - 116	18 - 22	7 - 11	347 - 367	104 - 114	16 - 20	7 - 11			14 - 16	32 - 38
		22.5	355 - 375	113 - 123	17 - 21	7 - 11	355 - 375	111 - 121	15 - 19	7 - 11			11 - 13	34 - 40
		30	363 - 383	120 - 130	17 - 21	7 - 11	364 - 384	118 - 128	15 - 19	7 - 11			7 - 9	35 - 41
	90	15	385 - 405	140 - 150	16 - 20	10 - 14	385 - 405	137 - 147	14 - 18	10 - 14			18 - 20	39 - 45
		22.5	393 - 413	145 - 155	17 - 21	14 - 18	394 - 414	144 - 154	15 - 19	14 - 18			14 - 16	41 - 47
		30	401 - 421	151 - 161	18 - 22	17 - 21	402 - 422	151 - 161	15 - 19	17 - 21			9 - 11	42 - 48
	120	15												
		22.5												
		30												

* Based on 20% Methanol antifreeze solution.

Unit Operating Conditions

Models:
SB
072-300

SB 168	Entering Water Temp (°F)	Water Flow GPM/ ton	CKT1 Discharge Pressure CKT1 (PSIG)	CKT1 Suction Pressure CKT1 (PSIG)	CKT1 Superheat CKT1 (°F)	CKT1 Subcooling CKT1 (°F)	CKT2 Discharge Pressure CKT2 (PSIG)	CKT2 Suction Pressure CKT2 (PSIG)	CKT2 Superheat CKT2 (°F)	CKT2 Subcooling CKT2 (°F)	Water Temp Rise (°F)	Air Temp Drop (°F) DB	Water Temp Drop (°F)"	Air Temp Rise (°F) DB
Full Load Cooling	30*	21	158 - 178	103 - 113	18 - 22	14 - 18	169 - 189	104 - 114	22 - 26	14 - 18	21 - 23	21 - 27		
		31.5	146 - 166	97 - 107	18 - 22	17 - 21	155 - 175	97 - 107	21 - 25	17 - 21	15 - 17	20 - 26		
		42	134 - 154	92 - 102	17 - 21	19 - 23	142 - 162	90 - 100	20 - 24	19 - 23	9 - 11	19 - 25		
	50	21	213 - 233	110 - 120	16 - 20	9 - 13	224 - 244	108 - 118	22 - 26	9 - 13	20 - 22	20 - 26		
		31.5	199 - 219	108 - 118	14 - 18	11 - 15	207 - 227	106 - 116	19 - 23	11 - 15	15 - 17	20 - 26		
		42	184 - 204	106 - 116	12 - 16	12 - 16	191 - 211	103 - 113	17 - 21	12 - 16	9 - 11	20 - 26		
	70	21	284 - 304	115 - 125	15 - 19	7 - 11	295 - 315	112 - 122	22 - 26	7 - 11	20 - 22	19 - 25		
		31.5	267 - 287	114 - 124	13 - 17	8 - 12	277 - 297	111 - 121	19 - 23	8 - 12	14 - 16	19 - 25		
		42	250 - 270	113 - 123	10 - 14	9 - 13	258 - 278	110 - 120	16 - 20	9 - 13	9 - 11	19 - 25		
	90	21	368 - 388	120 - 130	16 - 20	6 - 10	382 - 402	116 - 126	22 - 26	6 - 10	19 - 21	19 - 25		
		31.5	350 - 370	119 - 129	13 - 17	7 - 11	361 - 381	115 - 125	19 - 23	7 - 11	14 - 16	19 - 25		
		42	331 - 351	118 - 128	11 - 15	7 - 11	341 - 361	115 - 125	16 - 20	7 - 11	9 - 11	19 - 25		
	120	21	520 - 540	126 - 136	16 - 20	5 - 9	534 - 554	124 - 134	21 - 25	5 - 9	18 - 20	17 - 23		
		31.5	499 - 519	126 - 136	14 - 18	5 - 9	512 - 532	123 - 133	18 - 22	5 - 9	13 - 15	17 - 23		
		42	479 - 499	125 - 135	12 - 16	6 - 10	489 - 509	123 - 133	16 - 20	6 - 10	9 - 11	17 - 23		
Full Load Heating	30*	21	284 - 304	55 - 65	10 - 14	13 - 17	282 - 302	54 - 64	9 - 13	13 - 17			3 - 5	18 - 24
		31.5	279 - 299	52 - 62	9 - 13	13 - 17	277 - 297	51 - 61	8 - 12	13 - 17			5 - 7	17 - 23
		42	274 - 294	48 - 58	8 - 12	13 - 17	272 - 292	47 - 57	7 - 11	13 - 17			6 - 8	16 - 22
	50	21	310 - 330	74 - 84	13 - 17	13 - 17	306 - 326	71 - 81	13 - 17	13 - 17			9 - 11	23 - 29
		31.5	316 - 336	78 - 88	13 - 17	13 - 17	312 - 332	75 - 85	14 - 18	13 - 17			7 - 9	24 - 30
		42	321 - 341	83 - 93	14 - 18	14 - 18	318 - 338	80 - 90	14 - 18	14 - 18			5 - 7	25 - 31
	70	21	344 - 364	101 - 111	15 - 19	15 - 19	340 - 360	96 - 106	16 - 20	15 - 19			13 - 15	29 - 35
		31.5	350 - 370	107 - 117	15 - 19	15 - 19	346 - 366	102 - 112	16 - 20	15 - 19			10 - 12	30 - 36
		42	357 - 377	113 - 123	15 - 19	16 - 20	353 - 373	108 - 118	17 - 21	16 - 20			7 - 9	31 - 37
	90	21	380 - 400	133 - 143	14 - 18	17 - 21	374 - 394	126 - 136	16 - 20	17 - 21			17 - 19	35 - 41
		31.5	388 - 408	139 - 149	14 - 18	18 - 22	382 - 402	132 - 142	16 - 20	18 - 22			12 - 14	36 - 42
		42	396 - 416	146 - 156	14 - 18	19 - 23	390 - 410	139 - 149	16 - 20	19 - 23			8 - 10	37 - 43
	120	21												
		31.5												
		42												

* Based on 20% Methanol antifreeze solution.

Models:
SB
072-300

Unit Operating Conditions

SB 192	Entering Water Temp (°F)	Water Flow GPM/ ton	CKT1 Discharge Pressure CKT1 (PSIG)	CKT1 Suction Pressure CKT1 (PSIG)	CKT1 Superheat CKT1 (°F)	CKT1 Subcooling CKT1 (°F)	CKT2 Discharge Pressure CKT2 (PSIG)	CKT2 Suction Pressure CKT2 (PSIG)	CKT2 Superheat CKT2 (°F)	CKT2 Subcooling CKT2 (°F)	Water Temp Rise (°F)	Air Temp Drop (°F) DB	Water Temp Drop (°F)"	Air Temp Rise (°F) DB
Full Load Cooling	30*	24	173 - 193	104 - 114	20 - 24	11 - 15	179 - 199	103 - 113	21 - 25	11 - 15	23 - 25	20 - 26		
		36	151 - 171	101 - 111	15 - 19	14 - 18	156 - 176	100 - 110	16 - 20	14 - 18	16 - 18	20 - 26		
		48	129 - 149	97 - 107	10 - 14	16 - 20	132 - 152	97 - 107	10 - 14	16 - 20	9 - 11	19 - 25		
	50	24	208 - 228	112 - 122	16 - 20	8 - 12	213 - 233	111 - 121	17 - 21	8 - 12	20 - 22	20 - 26		
		36	195 - 215	110 - 120	14 - 18	10 - 14	199 - 219	109 - 119	15 - 19	10 - 14	15 - 17	20 - 26		
		48	182 - 202	107 - 117	12 - 16	11 - 15	185 - 205	106 - 116	13 - 17	11 - 15	9 - 11	20 - 26		
	70	24	268 - 288	118 - 128	15 - 19	7 - 11	273 - 293	117 - 127	17 - 21	7 - 11	19 - 21	19 - 25		
		36	256 - 276	116 - 126	14 - 18	7 - 11	260 - 280	115 - 125	16 - 20	7 - 11	14 - 16	19 - 25		
		48	243 - 263	114 - 124	13 - 17	8 - 12	247 - 267	113 - 123	14 - 18	8 - 12	9 - 11	19 - 25		
	90	24	348 - 368	122 - 132	17 - 21	6 - 10	353 - 373	121 - 131	19 - 23	6 - 10	18 - 20	19 - 25		
		36	333 - 353	121 - 131	15 - 19	6 - 10	337 - 357	119 - 129	17 - 21	6 - 10	13 - 15	19 - 25		
		48	318 - 338	119 - 129	13 - 17	7 - 11	320 - 340	118 - 128	14 - 18	7 - 11	9 - 11	19 - 25		
	120	24	496 - 516	129 - 139	18 - 22	5 - 9	499 - 519	128 - 138	19 - 23	5 - 9	17 - 19	17 - 23		
		36	478 - 498	128 - 138	16 - 20	6 - 10	480 - 500	127 - 137	17 - 21	6 - 10	12 - 14	17 - 23		
		48	461 - 481	127 - 137	14 - 18	6 - 10	461 - 481	126 - 136	15 - 19	6 - 10	8 - 10	17 - 23		
Full Load Heating	30*	24	254 - 274	51 - 61	9 - 13	8 - 12	252 - 272	53 - 63	5 - 9	8 - 12			7 - 9	16 - 22
		36	257 - 277	54 - 64	9 - 13	8 - 12	255 - 275	56 - 66	5 - 9	8 - 12			5 - 7	17 - 23
		48	261 - 281	57 - 67	10 - 14	7 - 11	258 - 278	59 - 69	5 - 9	7 - 11			3 - 5	18 - 24
	50	24	283 - 303	78 - 88	12 - 16	10 - 14	279 - 299	77 - 87	8 - 12	10 - 14			10 - 12	22 - 28
		36	287 - 307	82 - 92	13 - 17	10 - 14	283 - 303	81 - 91	8 - 12	10 - 14			7 - 9	23 - 29
		48	292 - 312	87 - 97	13 - 17	10 - 14	287 - 307	85 - 95	8 - 12	10 - 14			5 - 7	24 - 30
	70	24	311 - 331	107 - 117	12 - 16	10 - 14	306 - 326	104 - 114	8 - 12	10 - 14			13 - 15	28 - 34
		36	317 - 337	114 - 124	11 - 15	11 - 15	311 - 331	110 - 120	8 - 12	11 - 15			10 - 12	29 - 35
		48	323 - 343	121 - 131	10 - 14	11 - 15	317 - 337	116 - 126	7 - 11	11 - 15			7 - 9	31 - 37
	90	24	341 - 361	141 - 151	9 - 13	13 - 17	334 - 354	135 - 145	5 - 9	13 - 17			17 - 19	34 - 40
		36	347 - 367	147 - 157	8 - 12	14 - 18	340 - 360	142 - 152	4 - 8	14 - 18			13 - 15	35 - 41
		48	353 - 373	154 - 164	8 - 12	15 - 19	345 - 365	149 - 159	4 - 8	15 - 19			9 - 11	36 - 42
	120	24												
		36												
		48												

* Based on 20% Methanol antifreeze solution.

Unit Operating Conditions

Models:
SB
072-300

SB 240	Entering Water Temp (°F)	Water Flow GPM/ ton	CKT1 Discharge Pressure CKT1 (PSIG)	CKT1 Suction Pressure CKT1 (PSIG)	CKT1 Superheat CKT1 (°F)	CKT1 Subcooling CKT1 (°F)	CKT2 Discharge Pressure CKT2 (PSIG)	CKT2 Suction Pressure CKT2 (PSIG)	CKT2 Superheat CKT2 (°F)	CKT2 Subcooling CKT2 (°F)	Water Temp Rise (°F)	Air Temp Drop (°F) DB	Water Temp Drop (°F)"	Air Temp Rise (°F) DB
Full Load Cooling	30*	30	181 - 201	105 - 115	18 - 22	12 - 16	191 - 211	108 - 118	19 - 23	12 - 16	22 - 24	19 - 25		
		45	158 - 178	97 - 107	16 - 20	17 - 21	165 - 185	100 - 110	17 - 21	17 - 21	15 - 17	19 - 25		
		60	136 - 156	89 - 99	13 - 17	22 - 26	139 - 159	92 - 102	15 - 19	22 - 26	9 - 11	18 - 24		
	50	30	218 - 238	112 - 122	16 - 20	9 - 13	227 - 247	113 - 123	16 - 20	9 - 13	20 - 22	19 - 25		
		45	205 - 225	110 - 120	14 - 18	11 - 15	211 - 231	111 - 121	15 - 19	11 - 15	15 - 17	19 - 25		
		60	191 - 211	107 - 117	12 - 16	12 - 16	195 - 215	109 - 119	13 - 17	12 - 16	9 - 11	19 - 25		
	70	30	280 - 300	117 - 127	15 - 19	7 - 11	289 - 309	117 - 127	15 - 19	7 - 11	19 - 21	18 - 24		
		45	265 - 285	116 - 126	13 - 17	8 - 12	271 - 291	116 - 126	13 - 17	8 - 12	14 - 16	18 - 24		
		60	250 - 270	115 - 125	10 - 14	8 - 12	254 - 274	115 - 125	10 - 14	8 - 12	9 - 11	18 - 24		
	90	30	363 - 383	121 - 131	16 - 20	5 - 9	372 - 392	121 - 131	15 - 19	5 - 9	18 - 20	17 - 23		
		45	342 - 362	119 - 129	13 - 17	6 - 10	348 - 368	119 - 129	12 - 16	6 - 10	13 - 15	17 - 23		
		60	321 - 341	118 - 128	10 - 14	7 - 11	325 - 345	118 - 128	8 - 12	7 - 11	8 - 10	17 - 23		
	120	30	516 - 536	127 - 137	18 - 22	5 - 9	523 - 543	128 - 138	15 - 19	5 - 9	17 - 19	16 - 22		
		45	497 - 517	126 - 136	15 - 19	5 - 9	502 - 522	127 - 137	13 - 17	5 - 9	13 - 15	16 - 22		
		60	477 - 497	126 - 136	13 - 17	5 - 9	480 - 500	127 - 137	10 - 14	5 - 9	8 - 10	16 - 22		
Full Load Heating	30*	30	260 - 280	60 - 70	16 - 20	7 - 11	270 - 290	56 - 66	17 - 21	7 - 11			3 - 5	17 - 23
		45	262 - 282	54 - 64	16 - 20	8 - 12	267 - 287	51 - 61	17 - 21	8 - 12			5 - 7	17 - 23
		60	263 - 283	48 - 58	17 - 21	9 - 13	263 - 283	47 - 57	16 - 20	9 - 13			7 - 9	16 - 22
	50	30	289 - 309	94 - 104	17 - 21	7 - 11	303 - 323	85 - 95	19 - 23	7 - 11			4 - 6	23 - 29
		45	294 - 314	85 - 95	19 - 23	8 - 12	301 - 321	80 - 90	19 - 23	8 - 12			7 - 9	23 - 29
		60	299 - 319	75 - 85	20 - 24	8 - 12	298 - 318	74 - 84	19 - 23	8 - 12			10 - 12	23 - 29
	70	30	352 - 372	119 - 129	21 - 25	10 - 14	349 - 369	117 - 127	19 - 23	10 - 14			7 - 9	33 - 39
		45	343 - 363	111 - 121	21 - 25	10 - 14	340 - 360	109 - 119	19 - 23	10 - 14			10 - 12	31 - 37
		60	335 - 355	104 - 114	21 - 25	9 - 13	332 - 352	102 - 112	20 - 24	9 - 13			13 - 15	30 - 36
	90	30	395 - 415	155 - 165	19 - 23	14 - 18	392 - 412	154 - 164	16 - 20	14 - 18			9 - 11	41 - 47
		45	385 - 405	146 - 156	19 - 23	12 - 16	381 - 401	144 - 154	17 - 21	12 - 16			13 - 15	39 - 45
		60	374 - 394	138 - 148	20 - 24	11 - 15	371 - 391	134 - 144	18 - 22	11 - 15			17 - 19	37 - 43
	120	30												
		45												
		60												

* Based on 20% Methanol antifreeze solution.

Models:
SB
072-300

Unit Operating Conditions

SB 300	Entering Water Temp (°F)	Water Flow GPM/ ton	CKT1 Discharge Pressure CKT1 (PSIG)	CKT1 Suction Pressure CKT1 (PSIG)	CKT1 Superheat CKT1 (°F)	CKT1 Subcooling CKT1 (°F)	CKT2 Discharge Pressure CKT2 (PSIG)	CKT2 Suction Pressure CKT2 (PSIG)	CKT2 Superheat CKT2 (°F)	CKT2 Subcooling CKT2 (°F)	Water Temp Rise (°F)	Air Temp Drop (°F) DB	Water Temp Drop (°F)"	Air Temp Rise (°F) DB
Full Load Cooling	30*	37.5	171 - 191	112 - 122	4 - 8	4 - 8	178 - 198	113 - 123	14 - 18	4 - 8	21 - 23	19 - 25		
		56.25	166 - 186	113 - 123	4 - 8	5 - 9	171 - 191	115 - 125	10 - 14	5 - 9	16 - 18	19 - 25		
		75	161 - 181	114 - 124	4 - 8	6 - 10	164 - 184	117 - 127	6 - 10	6 - 10	12 - 14	19 - 25		
	50	37.5	216 - 236	114 - 124	5 - 9	4 - 8	225 - 245	116 - 126	14 - 18	4 - 8	20 - 22	19 - 25		
		56.25	205 - 225	114 - 124	3 - 7	4 - 8	212 - 232	116 - 126	11 - 15	4 - 8	15 - 17	19 - 25		
		75	194 - 214	114 - 124	2 - 6	5 - 9	199 - 219	116 - 126	7 - 11	5 - 9	10 - 12	19 - 25		
	70	37.5	280 - 300	118 - 128	7 - 11	3 - 7	291 - 311	120 - 130	15 - 19	3 - 7	20 - 22	18 - 24		
		56.25	265 - 285	117 - 127	4 - 8	4 - 8	274 - 294	119 - 129	12 - 16	4 - 8	15 - 17	18 - 24		
		75	250 - 270	117 - 127	2 - 6	4 - 8	257 - 277	119 - 129	9 - 13	4 - 8	9 - 11	18 - 24		
	90	37.5	361 - 381	122 - 132	8 - 12	3 - 7	374 - 394	124 - 134	15 - 19	3 - 7	19 - 21	17 - 23		
		56.25	344 - 364	121 - 131	6 - 10	3 - 7	355 - 375	123 - 133	12 - 16	3 - 7	14 - 16	17 - 23		
		75	326 - 346	120 - 130	3 - 7	3 - 7	335 - 355	123 - 133	9 - 13	3 - 7	9 - 11	17 - 23		
	120	37.5	508 - 528	129 - 139	9 - 13	2 - 6	525 - 545	131 - 141	15 - 19	2 - 6	18 - 20	15 - 21		
		56.25	489 - 509	128 - 138	7 - 11	2 - 6	503 - 523	130 - 140	12 - 16	2 - 6	13 - 15	15 - 21		
		75	471 - 491	128 - 138	5 - 9	2 - 6	482 - 502	130 - 140	10 - 14	2 - 6	9 - 11	16 - 22		
Full Load Heating	30*	37.5	266 - 286	48 - 58	6 - 10	7 - 11	267 - 287	47 - 57	7 - 11	7 - 11			6 - 8	16 - 22
		56.25	271 - 291	52 - 62	7 - 11	7 - 11	271 - 291	51 - 61	7 - 11	7 - 11			5 - 7	17 - 23
		75	275 - 295	55 - 65	7 - 11	7 - 11	275 - 295	54 - 64	8 - 12	7 - 11			3 - 5	18 - 24
	50	37.5	301 - 321	74 - 84	11 - 15	6 - 10	301 - 321	74 - 84	13 - 17	6 - 10			10 - 12	23 - 29
		56.25	306 - 326	78 - 88	11 - 15	6 - 10	307 - 327	79 - 89	14 - 18	6 - 10			7 - 9	24 - 30
		75	311 - 331	83 - 93	12 - 16	6 - 10	313 - 333	83 - 93	15 - 19	6 - 10			5 - 7	25 - 31
	70	37.5	337 - 357	104 - 114	14 - 18	7 - 11	338 - 358	102 - 112	17 - 21	7 - 11			14 - 16	30 - 36
		56.25	345 - 365	111 - 121	13 - 17	7 - 11	346 - 366	109 - 119	17 - 21	7 - 11			10 - 12	32 - 38
		75	353 - 373	118 - 128	13 - 17	7 - 11	355 - 375	116 - 126	17 - 21	7 - 11			7 - 9	33 - 39
	90	37.5	376 - 396	138 - 148	11 - 15	8 - 12	379 - 399	135 - 145	17 - 21	8 - 12			18 - 20	37 - 43
		56.25	387 - 407	148 - 158	10 - 14	9 - 13	388 - 408	145 - 155	16 - 20	9 - 13			13 - 15	39 - 45
		75	398 - 418	159 - 169	9 - 13	9 - 13	398 - 418	155 - 165	15 - 19	9 - 13			9 - 11	41 - 47
	120	37.5												
		56.25												
		75												

* Based on 20% Methanol antifreeze solution.

Startup Log Sheet

Models:
SB
072-300

7300 S.W. 44th Street, Oklahoma City, OK 73179 • Phone: 405.745-6000

Installer: Complete *Unit and System Checkout* and follow *Unit Startup Procedures* in the IOM. Use this form to record unit information, temperatures, and pressures during startup. Keep this form for reference.

Job Name:

Street Address:

Model Number: **Serial Number:**

Unit Location in Building:

Date: **Sales Order Number:**

In order to minimize troubleshooting and costly system failures, complete the following checks and data entries before the system is put into full operation.

External Static: _____

Sheave Setting: _____ Turns Open

Temperatures (check one): ☐ °F ☐ °C Antifreeze: _____ %

Pressures (check one): ☐ PSIG ☐ kPa Type: _____

	Cooling Mode		Heating Mode
Entering Fluid Temperature			
Leaving Fluid Temperature			
Fluid Temperature Differential			
Return-Air Temperature	DB	WB	DB
Supply-Air Temperature	DB	WB	DB
Air Temperature Differential			
Water Coil Heat Exchanger (Water Pressure IN)			
Water Coil Heat Exchanger (Water Pressure OUT)			
Pressure Differential			
Flow Rate GPM (l/s)			
Compressor			
Amps			
Volts			
Discharge Line Temperature			
Motor			
Amps			
Volts			

NOTES:
1. Allow unit to run 15 minutes in each mode before taking data.
2. Never connect refrigerant gauges during startup procedures.
3. Conduct water-side analysis using P/T ports to determine water flow and temperature difference.
4. If water-side analysis shows poor performance, refrigerant troubleshooting may be required.
5. Connect refrigerant gauges as a last resort.

Models:
SB
072-300

Preventative Maintenance

WATER COIL MAINTENANCE (WATER LOOP APPLICATIONS)

Generally water coil maintenance is not needed for closed loop systems. However, if the piping is known to have high dirt or debris content, it is best to establish a periodic maintenance schedule with the owner so the water coil can be checked regularly. Dirty installations are typically the result of deterioration of iron or galvanized piping or components in the system. Open cooling towers requiring heavy chemical treatment and mineral buildup through water use can also contribute to higher maintenance. Should periodic coil cleaning be necessary, use standard coil cleaning procedures, which are compatible with both the heat exchanger material and copper water lines. Generally, the more water flowing through the unit, the less chance for scaling. However, flow rates over 3 gpm per ton (3.9 l/m per kW) can produce water (or debris) velocities that can erode the heat exchanger wall and ultimately produce leaks.

HOT WATER GENERATOR COILS

See water coil maintenance for ground water units. If the potable water is hard or not chemically softened, the high temperatures of the desuperheater will tend to scale even quicker than the water coil and may need more frequent inspections. In areas with extremely hard water, a HWG is not recommended.

FILTERS

Filters must be clean to obtain maximum performance. Filters should be inspected every month under normal operating conditions and be replaced when necessary. Units should never be operated without a filter.

CONDENSATE DRAIN

In areas where airborne bacteria may produce a "slimy" substance in the drain pan, it may be necessary to treat the drain pan chemically with an algaecide approximately every three months to minimize the problem. The condensate pan may also need to be cleaned periodically to ensure indoor air quality. The condensate drain can pick up lint and dirt, especially with dirty filters. Inspect the drain twice a year to avoid the possibility of plugging and eventual overflow.

COMPRESSOR

Conduct annual amperage checks to ensure that amp draw is no more than 10% greater than indicated on the serial dataplate.

AIR COIL

The air coil must be cleaned to obtain maximum performance. Check once a year under normal operating conditions and, if dirty, brush or vacuum clean. Care must be taken not to damage the aluminum fins while cleaning.

⚠ CAUTION

Fin edges are sharp and may cause injury.

BELT

Ensure the belt is tight. Retighten if needed. Replace if it is split or cracked.

CABINET

Do not allow water to stay in contact with the cabinet for long periods of time to prevent corrosion of the

⚠ CAUTION

Fin edges are sharp and may cause injury.

cabinet sheet metal. Generally, vertical cabinets are set up from the floor a few inches (7 - 8 cm) to prevent water from entering the cabinet. The cabinet can be cleaned using a mild detergent.

REPAIRS TO SEALED COMPONENTS

Sealed electrical components shall be replaced.

Circuit Diagram with Safety Devices

Models:
SB
072-300

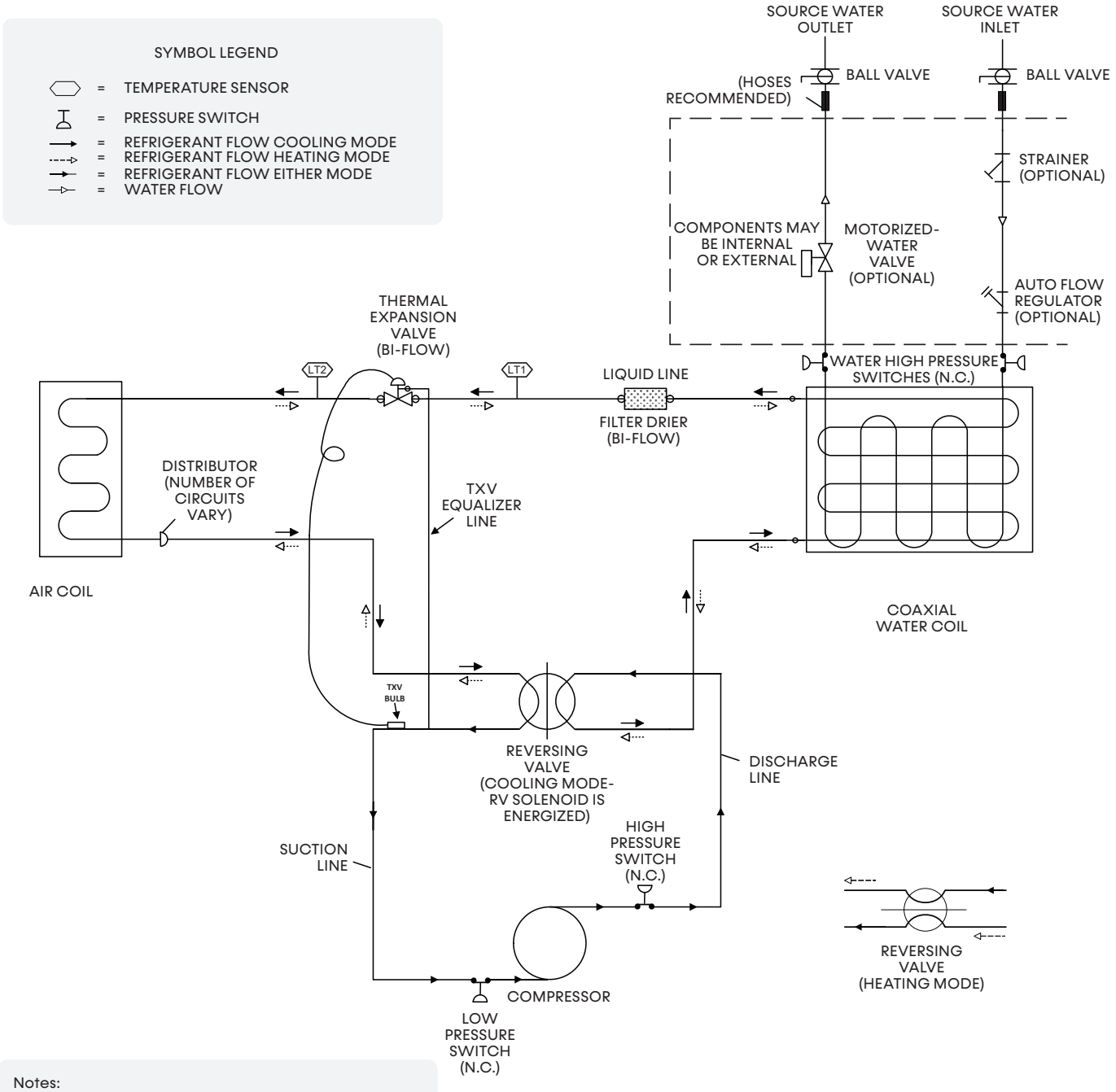

Notes:
1. LT1 and LT2 sensors connect to CXM2
2. Refrigerant high and low pressure switches connect to CXM2
3. Water high pressure switches are wired in series with refrigerant high pressure switch.

Models:
SB
072-300

Functional Troubleshooting

Fault	Htg	Clg	Possible Cause	Solution
Main power problems	X	X	Green Status LED Off	Check line voltage circuit breaker and disconnect.
				Check for line voltage between L1 and L2 on the contactor.
				Check for 24VAC between R and C on CXM2
				Check primary/secondary voltage on transformer.
HP Fault Code 2 High Pressure		X	Reduced or no water flow in cooling	Check pump operation or valve operation/setting.
				Check water flow adjust to proper flow rate.
		X	Water Temperature out of range in cooling	Bring water temp within design parameters.
	X		Reduced or no airflow in heating	Check for dirty air filter and clean or replace.
				Check fan motor operation and airflow restrictions.
				Dirty Air Coil - construction dust etc.
				Too high of external static? Check static vs blower table.
	X		Air temperature out of range in heating	Bring return air temp within design parameters.
	X	X	Overcharged with refrigerant	Check superheat/subcooling vs typical operating condition table.
	X	X	Bad HP Switch	Check switch continuity and operation. Replace.
LP/LOC Fault Code 3	X	X	Insufficient charge	Check for refrigerant leaks.
Low Pressure / Loss of Charge	X		Compressor pump down at start-up	Check charge and start-up water flow.
LT1 Fault Code 4 Water coil low temperature limit	X		Reduced or no water flow in heating	Check pump operation or water valve operation/setting.
				Plugged strainer or filter? Clean or replace.
				Check water flow. Adjust to proper flow rate.
	X		Inadequate antifreeze level	Check antifreeze density with hydrometer.
	X		Improper temperature limit setting (30°F vs 10°F [-1°C vs -2°C])	Clip JW3 jumper for antifreeze (10°F [-12°C]) use.
	X		Water Temperature out of range	Bring water temp within design parameters.
	X	X	Bad thermistor	Check temp and impedance correlation per chart.
LT2 Fault Code 5 Air coil low temperature limit		X	Reduced or no airflow in cooling	Check for dirty air filter and clean or replace.
				Check fan motor operation and airflow restrictions.
				Too high of external static? Check static vs blower table.
		X	Air Temperature out of range	Too much cold vent air? Bring entering air temp within design parameters.
		X	Improper temperature limit setting (30°F vs 10°F [-1°C vs -12°C])	Normal air-side applications will require 30°F [-1°C] only.
	X	X	Bad thermistor	Check temp and impedance correlation per chart.
Condensate Fault Code 6	X	X	Blocked drain	Check for blockage and clean drain.
	X	X	Improper trap	Check trap dimensions and location ahead of vent.
		X	Poor drainage	Check for piping slope away from unit.
				Check slope of unit toward outlet.
				Poor venting? Check vent location.
		X	Moisture on sensor	Check for moisture shorting to air coil.
	X	X	Plugged air filter	Replace air filter.
	X	X	Restricted Return Airflow	Find and eliminate restriction. Increase return duct and/or grille size.

Table continued on next page.

Functional Troubleshooting

Models:
SB
072-300

Table continued from previous page.

Fault	Htg	Clg	Possible Cause	Solution
Over/Under Voltage Code 7 (Auto resetting)	X	X	Under Voltage	Check power supply and 24VAC voltage before and during operation.
				Check power supply wire size.
				Check compressor starting. Need hard start kit?
				Check 24VAC and unit transformer. Tap for correct power supply voltage.
	X	X	Over Voltage	Check power supply voltage and 24VAC before and during operation.
				Check 24VAC and unit transformer. Tap for correct power supply voltage.
Unit Performance Sentinel Code 8	X		Heating mode LT2>125°F [52°C]	Check for poor airflow or overcharged unit.
		X	Cooling Mode LT1>125°F [52°C] OR LT2< 40°F [4°C]	Check for poor water flow or airflow.
Swapped Thermistor Code 9	X	X	LT1 and LT2 swapped	Reverse position of thermistors
Refrigerant and RDS Code 15	X	X	Refrigerant Leak	Check refrigerant charge. If the charge is low, identify and repair the leak.
			Faulty RDS sensor	Check refrigerant charge. If the charge is not low, replace the RDS sensor.
No Fault Code Shown	X	X	No compressor operation	See "Only Fan Runs".
	X	X	Compressor overload	Check and replace, if necessary.
	X	X	Control board	Reset power and check operation.
Unit Short Cycles	X	X	Dirty air filter	Check and clean air filter.
	X	X	Unit in "test mode"	Reset power or wait 20 minutes for auto exit.
	X	X	Unit selection	Unit may be oversized for space. Check sizing for actual load of space.
	X	X	Compressor overload	Check and replace, if necessary.
Only Fan Runs	X	X	Thermostat position	Ensure thermostat set for heating or cooling operation.
	X	X	Unit locked out	Check for lockout codes. Reset power.
	X	X	Compressor Overload	Check compressor overload. Replace if necessary.
	X	X	Thermostat wiring	Check thermostat wiring at heat pump. Jumper Y and R for compressor operation in test mode.
Only Compressor Runs	X	X	Thermostat wiring	Check G wiring at heat pump. Jumper G and R for fan operation.
	X	X		Check thermostat wiring at heat pump. Jumper Y and R for compressor operation in test mode.
	X	X	Fan motor relay	Jumper G and R for fan operation. Check for line voltage across BR contacts.
	X	X		Check fan power enable relay operation (if present).
	X	X	Fan motor	Check for line voltage at motor. Check capacitor.
Unit Doesn't Operate in Cooling		X	Reversing valve	Set for cooling demand and check 24VAC on RV coil and at CXM2.
		X		If RV is stuck, run high pressure up by reducing water flow and while operating engage and disengage RV coil voltage to push valve.
		X	Thermostat setup	Check for 'O' RV setup not 'B'.
		X	Thermostat wiring	Check O wiring at heat pump. Jumper O and R for RV coil 'click'.
		X		Put thermostat in cooling mode. Check 24VAC on O (check between C and O); check for 24VAC on W (check between W and C). There should be voltage on O, but not on W. If voltage is present on W, thermostat may be bad or wired incorrectly.

Models:
SB
072-300

Performance Troubleshooting

Symptom	Htg	Clg	Possible Cause	Solution
Insufficient capacity/ Not cooling or heating	X	X	Dirty filter	Replace or clean.
	X		Reduced or no airflow in heating	Check for dirty air filter and clean or replace.
				Check fan motor operation and airflow restrictions.
				Too high of external static? Check static vs. blower table.
		X	Reduced or no airflow in cooling	Check for dirty air filter and clean or replace.
				Check fan motor operation and airflow restrictions.
				Too high of external static? Check static vs. blower table.
	X	X	Leaky duct work	Check supply and return air temperatures at the unit and at distant duct registers. If significantly different, duct leaks are present.
	X	X	Low refrigerant charge	Check superheat and subcooling per chart.
	X	X	Restricted metering device	Check superheat and subcooling per chart. Replace.
		X	Defective reversing valve	Perform RV touch test.
	X	X	Thermostat improperly located	Check location and for air drafts behind stat.
	X	X	Unit undersized	Recheck loads & sizing. Check sensible cooling load and heat pump capacity.
	X	X	Scaling in water heat exchanger	Perform scaling check and clean if necessary.
	X	X	Inlet water too hot or cold	Check load, loop sizing, loop backfill, ground moisture.
High Head Pressure	X		Reduced or no airflow in heating	Check for dirty air filter and clean or replace.
				Check fan motor operation and airflow restrictions.
				Too high of external static? Check static vs. blower table.
		X	Reduced or no water flow in cooling	Check pump operation or valve operation/setting.
				Check water flow. Adjust to proper flow rate.
		X	Inlet water too hot	Check load, loop sizing, loop backfill, ground moisture.
	X		Air temperature out of range in heating	Bring return air temperature within design parameters.
		X	Scaling in water heat exchanger	Perform scaling check and clean if necessary.
	X	X	Unit overcharged	Check superheat and subcooling. Re-weigh in charge.
	X	X	Non-condensables in system	Vacuum system and re-weigh in charge.
	X	X	Restricted metering device	Check superheat and subcooling per chart. Replace.
Low Suction Pressure	X		Reduced water flow in heating	Check pump operation or water valve operation/setting.
				Plugged strainer or filter? Clean or replace.
				Check water flow. Adjust to proper flow rate.
	X		Water temperature out of range	Bring water temperature within design parameters.
		X	Reduced airflow in cooling	Check for dirty air filter and clean or replace.
				Check fan motor operation and airflow restrictions.
				Too high of external static? Check static vs. blower table.
		X	Air temperature out of range	Too much cold vent air? Bring entering air temperature within design parameters.
	X	X	Insufficient charge	Check for refrigerant leaks.

Table continued on next page.

Performance Troubleshooting

Models:
SB
072-300

Table continued from previous page.

Symptom	Htg	Clg	Possible Cause	Solution
Low Discharge Air Temperature in Heating	X		Too high of airflow	Check fan motor speed selection and airflow chart.
	X		Poor performance	See 'Insufficient Capacity'
High humidity		X	Too high of airflow	Check fan motor speed selection and airflow chart.
		X	Unit oversized	Recheck loads & sizing. Check sensible cooling load and heat pump capacity.
Only Compressor Runs	X	X	Thermostat wiring	Check G wiring at heat pump. Jumper G and R for fan operation.
	X	X	Fan motor relay	Jumper G and R for fan operation. Check for line voltage across blower relay contacts.
				Check fan power. Enable relay operation (if present).
	X	X	Fan motor	Check for line voltage at motor. Check capacitor.
	X	X	Thermostat wiring	Check thermostat wiring at CXM2. Put in Test Mode and then jumper Y1 and W1 to R to give call for fan, compressor and electric heat.
Unit Doesn't Operate in Cooling		X	Reversing valve	Set for cooling demand and check 24VAC on RV coil.
				If RV is stuck, run high pressure up by reducing water flow and, while operating, engage and disengage RV coil voltage to push valve.
		X	Thermostat setup	Check for "O' RV setup, not "B".
		X	Thermostat wiring	Check O wiring at heat pump. CXM2 requires call for compressor. You should hear a "click" sound from the reversing valve.
Modulating Valve Troubleshooting	X	X	Improper output setting	Verify the AO-2 jumper is in the 0-10V position.
	X	X	No valve output signal	Check DC voltage between AO2 and GND. Should be O when valve is off and between 3.3V and 10V when valve is on.
	X	X	No valve operation	Check voltage to the valve.
				Replace valve if voltage and control signals are present at the valve and it does not operate.

Models:
SB
072-300

Functional Troubleshooting Form

Customer:

Street Address:

Model Number: **Serial Number:**

Loop Type: **Antifreeze:**

Complaint: **Date:**

Heating Cycle Analysis

Suction: ____ °F
Suction: ____ PSI
Suction: ____ SAT

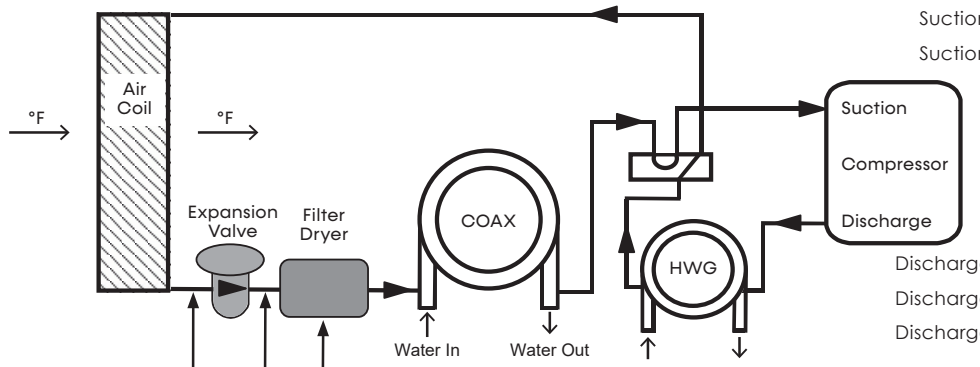

Discharge: ____ °F
Discharge: ____ PSI
Discharge: ____ SAT

LT2: Heating Liquid Line: ____ °F
Flash Gas Line: ____ °F
LT1 Sensor: ____ °F

Water In: ____ °F ____ PSI
Water Out: ____ °F ____ PSI

Refer to the pressure drop in the unit's IOM or Product Catalog to determine flow rate.

Cooling Cycle Analysis

Suction: ____ °F
Suction: ____ PSI
Suction: ____ SAT

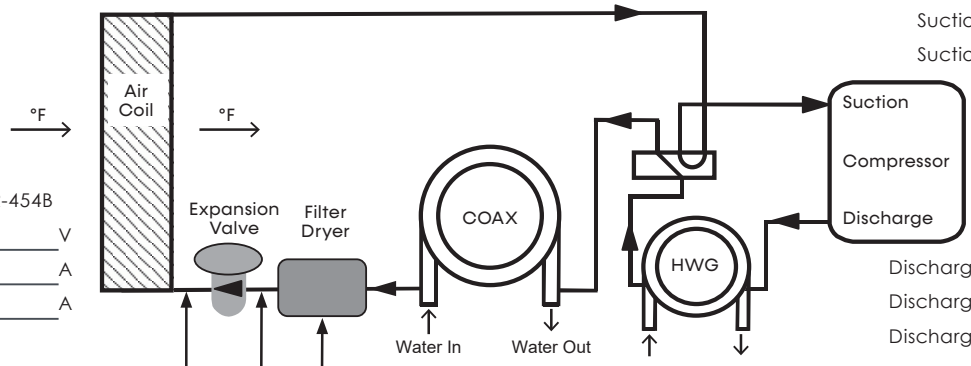

Refrigerant Type: R-454B
Voltage: ____ V
Amperage: ____ A
Total Amps: ____ A

Discharge: ____ °F
Discharge: ____ PSI
Discharge: ____ SAT

LT2: Flash Gas Line: ____ °F
Other Side of Filter DR: ____ °F
Cleaning Liquid Line: ____ °F

Water In: ____ °F ____ PSI
Water Out: ____ °F ____ PSI

Refer to the pressure drop in the unit's IOM or Product Catalog to determine flow rate.

Heat of Extraction (Absorption) or Heat of Rejection =

____ flow rate (GPM) x ____ temperature differential (°F) x ____ fluid factor† = ____

Superheat = Suction temperature - suction saturation temperature = ____

Supercooling = Discharge saturation temperature - liquid line temperature = ____

NOTES:

- † Use 500 water for water, 485 for antifreeze.

NOTE: Never connect refrigerant gauges during startup procedures. Conduct water-side analysis using P/T ports to determine water flow and temperature difference. If water-side analysis shows poor performance, refrigerant troubleshooting may be required. Connect refrigerant gauges as a last resort.

Warranty (U.S. & Canada)

Models:
SB
072-300

CLIMATEMASTER
A NIBE GROUP MEMBER

CLIMATE MASTER, INC.
LIMITED EXPRESS WARRANTY/ LIMITATION OF REMEDIES AND LIABILITY

It is expressly understood that unless a statement is specifically identified as a warranty, statements made by Climate Master, Inc., a Delaware corporation, ("CM") or its representatives, relating to CM's products, whether oral, written or contained in any sales literature, catalog or any other agreement, are not express warranties and do not form a part of the basis of the bargain, but are merely CM's opinion or commendation of CM's products.

EXCEPT AS SPECIFICALLY SET FORTH HEREIN, THERE IS NO EXPRESS WARRANTY AS TO ANY OF CM'S PRODUCTS. CM MAKES NO WARRANTY AGAINST LATENT DEFECTS. CM MAKES NO WARRANTY OF MERCHANTABILITY OF THE GOODS OR OF THE FITNESS OF THE GOODS FOR ANY PARTICULAR PURPOSE.

GRANT OF LIMITED EXPRESS WARRANTY
CM warrants CM products purchased and retained in the United States of America and Canada to be free from defects in material and workmanship under normal use and maintenance as follows: (1) All complete air conditioning, heating and/or heat pump units built or sold by CM for twelve (12) months from date of unit start up or eighteen (18) months from date of shipment (from factory), whichever comes first; (2) Repair and replacement parts, which are not supplied under warranty, for nintey (90) days from date of shipment (from factory). All parts must be returned to CM's factory in Oklahoma City, Oklahoma, freight prepaid, no later than sixty (60) days after the date of the failure of the part; if CM determines the part to be defective and within CM's Limited Express Warranty, CM shall, when such part has been either replaced or repaired, return such to a factory recognized dealer, contractor or service organization, F.O.B. CM's factory, Oklahoma City, Oklahoma, freight prepaid. The warranty on any parts repaired or replaced under warranty expires at the end of the original warranty period.

This warranty does not cover and does not apply to: (1) Air filters, fuses, refrigerant, fluids, oil; (2) Products relocated after initial installation; (3) Any portion or component of any system that is not supplied by CM, regardless of the cause of the failure of such portion or component; (4) Products on which the unit identification tags or labels have been removed or defaced; (5) Products on which payment to CM is or has been in default; (6) Products which have defects or damage which result from improper installation, wiring, electrical imbalance characteristics or maintenance; or are caused by accident, misuse or abuse, fire, flood, alteration or misapplication of the product; (7) Products which have defects or damage which result from a contaminated or corrosive air or liquid supply, operation at abnormal temperatures, or unauthorized opening of refrigerant circuit; (8) Mold, fungus or bacteria damages; (9) Products subjected to corrosion or abrasion; (10) Products manufactured or supplied by others; (11) Products which have been subjected to misuse, negligence or accidents; (12) Products which have been operated in a manner contrary to CM's printed instructions; or (13) Products which have defects, damage or insufficient performance as a result of insufficient or incorrect system design or the improper application of CM's products.

CM is not responsible for: (1) The costs of any fluids, refrigerant or other system components, or associated labor to repair or replace the same, which is incurred as a result of a defective part covered by CM's Limited Express Warranty; (2) The costs of labor, refrigerant, materials or service incurred in removal of the defective part, or in obtaining and replacing the new or repaired part; or, (3) Transportation costs of the defective part from the installation site to CM or of the return of any part not covered by CM's Limited Express Warranty.

Limitation: This Limited Express Warranty is given in lieu of all other warranties. If, notwithstanding the disclaimers contained herein, it is determined that other warranties exist, any such warranties, including without limitation any express warranties or any implied warranties of fitness for particular purpose and merchantability, shall be limited to the duration of the Limited Express Warranty.

LIMITATION OF REMEDIES
In the event of a breach of the Limited Express Warranty, CM will only be obligated at CM's option to repair the failed part or unit or to furnish a new or rebuilt part or unit in exchange for the part or unit which has failed. If after written notice to CM's factory in Oklahoma City, Oklahoma of each defect, malfunction or other failure and a reasonable number of attempts by CM to correct the defect, malfunction or other failure and the remedy fails of its essential purpose, CM shall refund the purchase price paid to CM in exchange for the return of the sold good(s). Said refund shall be the maximum liability of CM. **THIS REMEDY IS THE SOLE AND EXCLUSIVE REMEDY OF THE BUYER OR THEIR PURCHASER AGAINST CM FOR BREACH OF CONTRACT, FOR THE BREACH OF ANY WARRANTY OR FOR CM'S NEGLIGENCE OR IN STRICT LIABILITY.**

LIMITATION OF LIABILITY
CM shall have no liability for any damages if CM's performance is delayed for any reason or is prevented to any extent by any event such as, but not limited to: any war, civil unrest, government restrictions or restraints, strikes or work stoppages, fire, flood, accident, shortages of transportation, fuel, material, or labor, acts of God or any other reason beyond the sole control of CM. **CM EXPRESSLY DISCLAIMS AND EXCLUDES ANY LIABILITY FOR CONSEQUENTIAL OR INCIDENTAL DAMAGE IN CONTRACT, FOR BREACH OF ANY EXPRESS OR IMPLIED WARRANTY, OR IN TORT, WHETHER FOR CM's NEGLIGENCE OR AS STRICT LIABILITY.**

OBTAINING WARRANTY PERFORMANCE
Normally, the contractor or service organization who installed the products will provide warranty performance for the owner. Should the installer be unavailable, contact any CM recognized dealer, contractor or service organization. If assistance is required in obtaining warranty performance, write or call:

Climate Master, Inc. • Customer Service • 7300 S.W. 44th Street • Oklahoma City, Oklahoma 73179 (405) 745-6000

NOTE: Some states or Canadian provinces do not allow limitations on how long an implied warranty lasts, or the limitation or exclusions of consequential or incidental damages, so the foregoing exclusions and limitations may not apply to you. This warranty gives you specific legal rights, and you may also have other rights which vary from state to state and from Canadian province to Canadian province.

Please refer to the CM Installation, Operation and Maintenance Manual for operating and maintenance instructions.

Rev.: 11/09

LC083

SAMPLE

Models:
SB
072-300

Warranty (International)

CLIMATEMASTER
A NIBE GROUP MEMBER

CLIMATE MASTER, INC.
LIMITED EXPRESS WARRANTY /LIMITATION OF REMEDIES AND LIABILITY
(FOR INTERNATIONAL CLASS PRODUCTS)

Disclaimer: It is expressly understood that unless a statement is specifically identified as a warranty, statements made by Climate Master, Inc., a Delaware corporation, U. S. A. ("CM") or its representatives, relating to CM's products, whether oral, written or contained in any sales literature, catalog, this or any other agreement or other materials, are not express warranties and do not form a part of the basis of the bargain, but are merely CM's opinion or commendation of CM's products. **EXCEPT AS SPECIFICALLY SET FORTH HEREIN AND TO THE FULLEST EXTENT PERMITTED BY APPLICABLE LAW, CM MAKES NO WARRANTY AS TO ANY OF CM'S PRODUCTS, AND CM MAKES NO WARRANTY AGAINST LATENT DEFECTS OR ANY WARRANTY OF MERCHANTABILITY OF THE GOODS OR OF THE FITNESS OF THE GOODS FOR ANY PARTICULAR PURPOSE.**

GRANT OF LIMITED EXPRESS WARRANTY
CM warrants CM products purchased and installed outside the United States of America ("U.S.A.") and Canada to be free from material defects in materials and workmanship under normal use and maintenance as follows: (1) All complete air conditioning, heating or heat pump units built or sold by CM for twelve (12) months from date of unit start-up or eighteen (18) months from date of shipment (from CM's factory), whichever comes first; and, (2) Repair and replacement parts, which are not supplied under warranty, for ninety (90) days from date of shipment (from factory).

Warranty parts shall be furnished by CM if ordered through an authorized sales representative of CM ("Representative") within sixty (60) days after the failure of the part. If CM determines that a parts order qualifies for replacement under CM's warranty, such parts shall be shipped freight prepaid to the Representative or the ultimate user, as requested by Representative. All duties, taxes and other fees shall be paid by the ultimate user through the Representative.

If requested by CM, all defective parts shall be returned to CM's factory in Oklahoma City, Oklahoma, U.S.A, freight and duty prepaid, not later than sixty (60) days after the date of the request. If the defective part is not timely returned or if CM determines the part to not be defective or otherwise not to qualify under CM's Limited Express Warranty, CM shall invoice Customer the costs for the parts furnished, including freight. The warranty on any part repaired or replaced under warranty expires at the end of the original warranty period.

This warranty does not cover and does not apply to: (1) Air filters, fuses, refrigerant, fluids, oil; (2) Products relocated after initial installation; (3) Any portion or component of any system that is not supplied by CM, regardless of the cause of the failure of such portion or component; (4) Products on which the unit identification tags or labels have been removed or defaced; (5) Products on which payment by Customer to CM or its distributors or Representatives, or the Customer's seller is in default; (6) Products which have defects or damage which result from improper installation, wiring, electrical imbalance characteristics or maintenance; or from parts or components manufactured by others; or are caused by accident, misuse, negligence, abuse, fire, flood, lightning, alteration or misapplication of the product; (7) Products which have defects or damage which result from a contaminated or corrosive air or liquid supply, operation at abnormal temperatures or flow rates, or unauthorized opening of the refrigerant circuit; (8) Mold, fungus or bacteria damages; (9) Products subjected to corrosion or abrasion; (10) Products, parts or components manufactured or supplied by others; (11) Products which have been subjected to misuse, negligence or accidents; (12) Products which have been operated in a manner contrary to CM's printed instructions; (13) Products which have defects, damage or insufficient performance as a result of insufficient or incorrect system design or the improper application, installation, or use of CM's products; or (14) Electricity or fuel costs, or any increases or unrealized savings in same, for any reason.

CM is not responsible for: (1) The cost of any fluids, refrigerant or other system components, or the associated labor to repair or replace the same, which is incurred as a result of a defective part covered by CM's Limited Express Warranty; (2) The cost of labor, refrigerant, materials or service incurred in diagnosis and removal of the defective part, or in obtaining and replacing the new or repaired part; (3) Transportation costs of the defective part from the installation site to CM or of the return of any part not covered by CM's Limited Express Warranty; or (4) The costs of normal maintenance.

Limitation: This Limited Express Warranty is given in lieu of all other warranties. If, notwithstanding the disclaimers contained herein, it is determined by a court or other qualified judicial body that other warranties exist, any such warranty, including without limitation any express warranty or any implied warranty of fitness for particular purpose and merchantability, shall be limited to the duration of the Limited Express Warranty. This Limited Express Warranty does not exclude any warranty that is mandatory and that may not be excluded under applicable imperative law.

LIMITATION OF REMEDIES
In the event of a breach of this Limited Express Warranty or any warranty that is mandatory under applicable imperative law, CM will only be obligated at CM's option to either repair the failed part or unit or to furnish a new or rebuilt part or unit in exchange for the part or unit which has failed. If after written notice to CM's factory in Oklahoma City, Oklahoma, U.S.A. of each defect, malfunction or other failure and a reasonable number of attempts by CM to correct the defect, malfunction or other failure and the remedy fails of its essential purpose, CM shall refund the purchase price paid to CM in exchange for the return of the sold good(s). Said refund shall be the maximum liability of CM. **TO THE FULLEST EXTENT PERMITTED BY APPLICABLE LAW, THIS REMEDY IS THE SOLE AND EXCLUSIVE REMEDY OF THE CUSTOMER AGAINST CM FOR BREACH OF CONTRACT, FOR THE BREACH OF ANY WARRANTY OR FOR CM'S NEGLIGENCE OR IN STRICT LIABILITY.**

LIMITATION OF LIABILITY
CM shall have no liability for any damages if CM's performance is delayed for any reason or is prevented to any extent by any event such as, but not limited to: any war, civil unrest, government restrictions or restraints, strikes, or work stoppages, fire, flood, accident, allocation, shortages of transportation, fuel, materials, or labor, acts of God or any other reason beyond the sole control of CM. TO THE FULLEST EXTENT PERMITTED BY APPLICABLE LAW AND SUBJECT TO THE NEXT SENTENCE, CM EXPRESSLY DISCLAIMS AND EXCLUDES ANY LIABILITY FOR LOSS OF PROFITS, LOSS OF BUSINESS OR GOODWILL, CONSEQUENTIAL, INCIDENTAL, SPECIAL, LIQUIDATED, OR PUNITIVE DAMAGE IN CONTRACT, FOR BREACH OF ANY EXPRESS OR IMPLIED WARRANTY, OR IN TORT, WHETHER FOR CM's NEGLIGENCE OR AS STRICT LIABILITY. Nothing in this Agreement is intended to exclude CM's liability for death, personal injury or fraud.

OBTAINING WARRANTY PERFORMANCE
Normally, the contractor or service organization who installed the products will provide warranty performance for the owner. Should the installer be unavailable, contact any CM recognized Representative. If assistance is required in obtaining warranty performance, write or call:

Climate Master, Inc. • Customer Service • 7300 S.W. 44th Street • Oklahoma City, Oklahoma, U.S.A. 73179 • (405) 745-6000 • FAX (405) 745-6068

NOTE: Some countries do not allow limitations on how long an implied warranty lasts, or the limitation or exclusions of consequential or incidental damages, so the foregoing exclusions and limitations may not apply to you. This warranty gives you specific legal rights, and you may also have other rights which vary from state to state and country to country.

Please refer to the CM Installation, Operation and Maintenance Manual for operating and maintenance instructions.

Created: 10/09

LC079

SAMPLE

Notes

Models:
SB
072-300

Models:
SB
072-300

Revision History

Date	Section	Description
5/16/25	All	Updated compatibility from ACDU01/Handheld Service tool to Wireless Service Tool.
	Model Nomenclature	Corrected cabinet rail options to include 4" filters
	Physical Data	Added corner weights for horizontal units
		Corrected and clarified motor compatibility
		Added waterside economizer and accompanying data
	Horizontal Dimensional Data	Corrected condensate drain size
		Removed extraneous information in water connections notes
	SB 072-120 Vertical Dimensional Data	Removed and rewrote some notes and renumbered
	Water-Loop Heat Pump Applications	Added Warning and Caution concerning electrical water-loop applications
	Ground-Loop Heat Pump Application	Updated table, "Antifreeze Percentages by Volume"
	Closed-Loop External Central Pumping Applications	Added section
	Blower Performance	Removed note concerning Advanced Control Panel
	Unit and System Checkout	Removed extraneous electrical information
	Unit Startup Procedure	Corrected operating condition factors
		Updated pressure equalization time between tests
	Unit Operating Conditions	Added note clarifying shaded areas
	Functional Troubleshooting form	Updated Form
12/19/24	WSE Diagrams, Data, and Dimensions	Updated and rearranged preliminary WSE data, copy, and drawings with official content.
	Physical Data	Added blower horsepower data.
	Dimensional Data	Corrected flange and water connection measurements. Standardized electrical knockout data.
	Minimum Installation Area	Updated data. Removed unnecessary tables.
	Horizontal Installation	Changed "Duct Installation" page header to "Horizontal Installation"
	Field Conversion of Water Connections	Added note and graphic to clarify water connection directionality
	Performance Troubleshooting Guide	Removed mention of DXM2.5
	VFD, Functional Troubleshooting Guide, Performance Troubleshooting Guide	Reformatted
	Unit Startup Procedure	Added Motorized Water Valve and Modulating Valve adders and Water Pressure Drop tables.

CLIMATEMASTER®
A NIBE GROUP MEMBER
7300 SW 44th St | Oklahoma City, OK 73179
Phone: 800.299.9747
www.climatemaster.com

97B0150N01

ClimateMaster works continually to improve its products. As a result, the design and specifications of each product at the time of order may be changed without notice and may not be as described herein. Please contact ClimateMaster's Customer Service Department at 800-299-9747 for specific information on the current design and specifications. Statements and other information contained herein are not express warranties and do not form the basis of any bargain between the parties, but are merely ClimateMaster's opinion or commendation of its products. The latest version of this document is available at www.climatemaster.com.

Engineered and assembled in the USA.

© ClimateMaster, Inc. All Rights Reserved 2024