Installation and Operation Manual

FRIEDRICH

Kühl® Room Air Conditioners

PRECISION INVERTER®

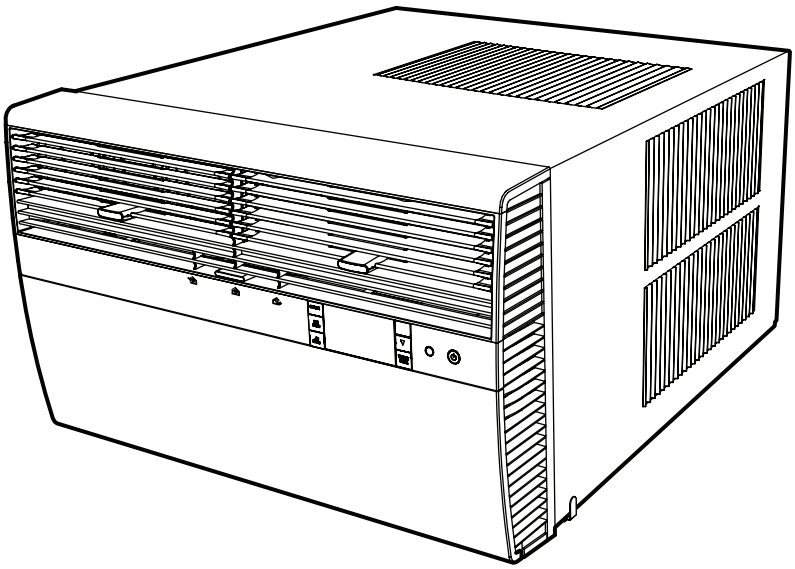

Q Chassis Models Using R-32 Refrigerant

Kühl 115-Volt: KCVQ08B10A

Kühl + 115-Volt: KHVQ10B11A

Heat Pump and Electric Heat

THE EXPERTS IN ROOM AIR CONDITIONING

93001022_00

RECOGNIZE THIS SYMBOL AS AN INDICATION OF IMPORTANT SAFETY INFORMATION!

⚠WARNING

THESE INSTRUCTIONS ARE INTENDED AS AN AID TO QUALIFIED SERVICE PERSONNEL FOR PROPER INSTALLATION, ADJUSTMENT AND OPERATION OF THIS UNIT. READ THESE INSTRUCTIONS THOROUGHLY BEFORE ATTEMPTING INSTALLATION OR OPERATION. FAILURE TO FOLLOW THESE INSTRUCTIONS MAY RESULT IN IMPROPER INSTALLATION, ADJUSTMENT, SERVICE OR MAINTENANCE, POSSIBLY RESULTING IN FIRE, ELECTRICAL SHOCK, CARBON MONOXIDE POISONING, EXPLOSION, PROPERTY DAMAGE, PERSONAL INJURY OR DEATH.

⚠WARNING

PROPOSITION 65 WARNING: THIS PRODUCT CONTAINS CHEMICALS KNOWN TO THE STATE OF CALIFORNIA TO CAUSE CANCER, BIRTH DEFECTS OR OTHER REPRODUCTIVE HARM.

DO NOT DESTROY THIS MANUAL. PLEASE READ CAREFULLY AND KEEP IN A SAFE PLACE FOR FUTURE REFERENCE BY A SERVICEMAN.

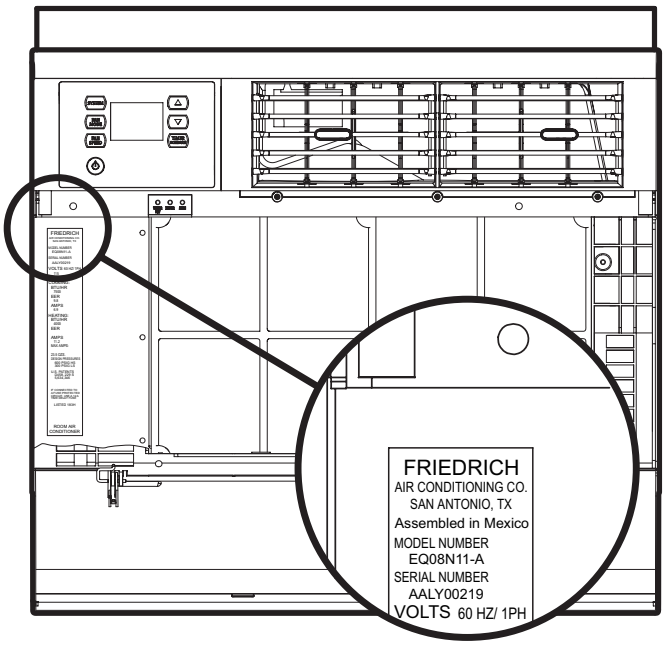

Model Nameplate Location

Register your Air Conditioner

Model information can be found on the name plate. Please complete and mail the owner registration card furnished with this product, or register online at www.friedrich.com.

For your future convenience, record the model information in Section R, information for the owner.

A. IMPORTANT SAFETY AND GENERAL INFORMATION 3
- A.1 Introduction 3
- A.2 • Safety Symbols 3

A.3 • SAFETY WARNINGS 4
- A.4 Unpacking Instructions 5
- A.5 Importance of a Quality Installation 6
- A.6 Packing List 7

B. SPECIFICATIONS 8
- B.1 Product Data 8
- B.2 Model Identification Guide 8
- B.3 Outdoor Use 8

C. INSTALLATION OF THE UNIT 9
- C.1 Pre-Installation Checkpoints 9
- C.2 Tools Required 9
- C.3. Choosing a Location 9
- C.4 Window Installation 10
- C.5 Thru-the Wall Installation 13
- C.6 Cord Routing Change 16
- C.7 Install Filter 18

E. ELECTRICAL 19
- E.1 Electrical Safety Information 19
- E.2 Testing the Power Cord 19

J. STARTUP AND OPERATION 20
- J.1 Final Inspection 20
- J.2 Airflow direction adjustment 20
- J.3 Control Panel Operation 21
- J.4 Remote Control Operation 23
- J.5 Start-up 23

L. WIFI 23

M. TROUBLESHOOTING 24
- M.1. Troubleshooting Tips 24
- M.2 Fault Codes 25
- P. Appendixes 26
- P.1 Accessories and Options 26

R . INFORMATION FOR THE OWNER 27
- R.1 Room air conditioner unit performance test data sheet 27
- R.2 Routine Maintenance 27

A. IMPORTANT SAFETY AND GENERAL INFORMATION

A.1 Introduction

This booklet contains the installation and operating instructions for your Friedrich Air Conditioning unit. There are some precautions that should be taken to ensure proper operation. Improper installation can result in unsatisfactory operation or dangerous conditions.

Read this booklet and any instructions packaged with separate equipment required to make up the system prior to installation. Give this booklet to the owner and explain its provisions. The owner should retain this booklet for future reference.

A.2 · Safety Symbols

SAFETY IS IMPORTANT

We have provided many important safety messages in this manual and on your appliance. Always read and obey all safety messages.

This is a safety Alert symbol. This symbol alerts you to potential hazards that may harm you and could potentially lead to death.

All safety messages will tell you what the potential hazard is, tell you how to reduce the chance of injury, and tell you what may happen if the instructions are not followed.

All safety messages will follow the safety alert symbol with the word "WARNING" or "CAUTION". These words mean:

WARNING Indicates a hazard which, if not avoided, can result in severe personal injury or death and damage to product or other property.

CAUTION Indicates a hazard which, if not avoided, can result in personal injury and damage to product or other property.

NOTICE Indicates property damage can occur if instructions are not followed.

This symbol indicates that this appliance uses a flammable refrigerant. If the refrigerant is leaked and is exposed to an external ignition source, there is a risk of fire.

This symbol indicates that the Operation Manual should be read carefully.

This symbol indicates that service personnel should be handling this equipment with reference to the installation manual.

This symbol indicates that information is available such as the Installation and Operation manual, or the Service Manual.

A. IMPORTANT SAFETY AND GENERAL INFORMATION

A.3 · Safety Warnings

⚠WARNING: The manufacturer's warranty does not cover any damage or defect to the air conditioner caused by the attachment or use of any components, accessories or devices (other than those authorized by the manufacturer) into, onto or in conjunction with the air conditioner. You should be aware that the use of unauthorized components, accessories or devices may adversely affect the operation of the air conditioner and may also endanger life and property. The manufacturer disclaims any responsibility for such loss or injury resulting from the use of such unauthorized components, accessories or devices.

⚠WARNING: This appliance is not intended for use by persons (Including children) with reduced physical, sensory or mental capabilities, or lack of experience and knowledge, unless they have been given supervision or instruction concerning use of the appliance by a person responsible for their safety.

Children should be supervised to ensure that they do not play with the appliance.

⚠WARNING: The maximum altitude for this appliance is 2,000 meters(6,562 feet).

Do not use above 2,000 meters(6,562 feet).

⚠WARNING: Electrical Shock Hazard

Disconnect all power to the unit before starting maintenance. All electrical connections and wiring MUST be installed by a qualified electrician and conform to the National Code and all local codes which have jurisdiction. Failure to do so can result in property damage, severe electrical shock or death.

⚠WARNING: Read Installation Manual

Read this manual thoroughly prior to equipment installation or operation. It is the installer's responsibility to properly apply and install the equipment. Installation must be in conformance with the NFPA 70-2023 national electric code or current edition, International Mechanic code 2021 or current edition, and any other local or national codes.

⚠WARNING: Safety First

Do not remove, disable, or bypass this unit's safety devices. Doing so may cause fire, injuries, or death.

⚠WARNING: This Product uses R-32 Refrigerant

Do not use means to accelerate the defrosting process or to clean, other than those recommended by the manufacturer.

The appliance shall be stored in a room without continuously operating ignition sources (for example: open flames, an operating gas appliance or an operating electric heater).

Do not pierce or burn.

Be aware that refrigerants may not contain an odor.

Refrigerant Safety Group A2L

⚠WARNING: Refrigeration System under High pressure

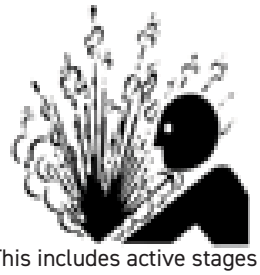

Do not puncture, heat, expose to flame or incinerate. Only certified refrigeration technicians should service this equipment. R32 systems operate at higher pressures than R22 equipment. Appropriate safe service and handling practices must be used.

⚠CAUTION: Do Not Operate Equipment During Active Stages Of Construction

To ensure proper operation, Friedrich requires that all equipment is not operated during active construction phases. This includes active stages of completing framing, drywalling, spackling, sanding, painting, flooring, and moulding in the equipment's designated conditioning space. The use of this equipment during construction could result in premature failure of the components and/or system and is in violation of our standard warranty guidelines. The operation of newly installed equipment during construction will accelerate the commencement and/or termination of the warranty period.

⚠WARNING: Keep all air circulation and ventilation openings free from obstruction.

⚠WARNING: The unit should not be in contact with any equipment that will transmit vibration to the unit. Any excessive vibration or pulsation to the unit could result in damage to the refrigerant tubing.

A.4 Unpacking Instructions

STEP 1. Cut all 4 packing straps.

STEP 2. Slowly remove outer box, careful not to loosen decorative front.

STEP 3. Remove upper cover.

STEP 4. Remove 4 corner angles.

STEP 5. Remove base carton.

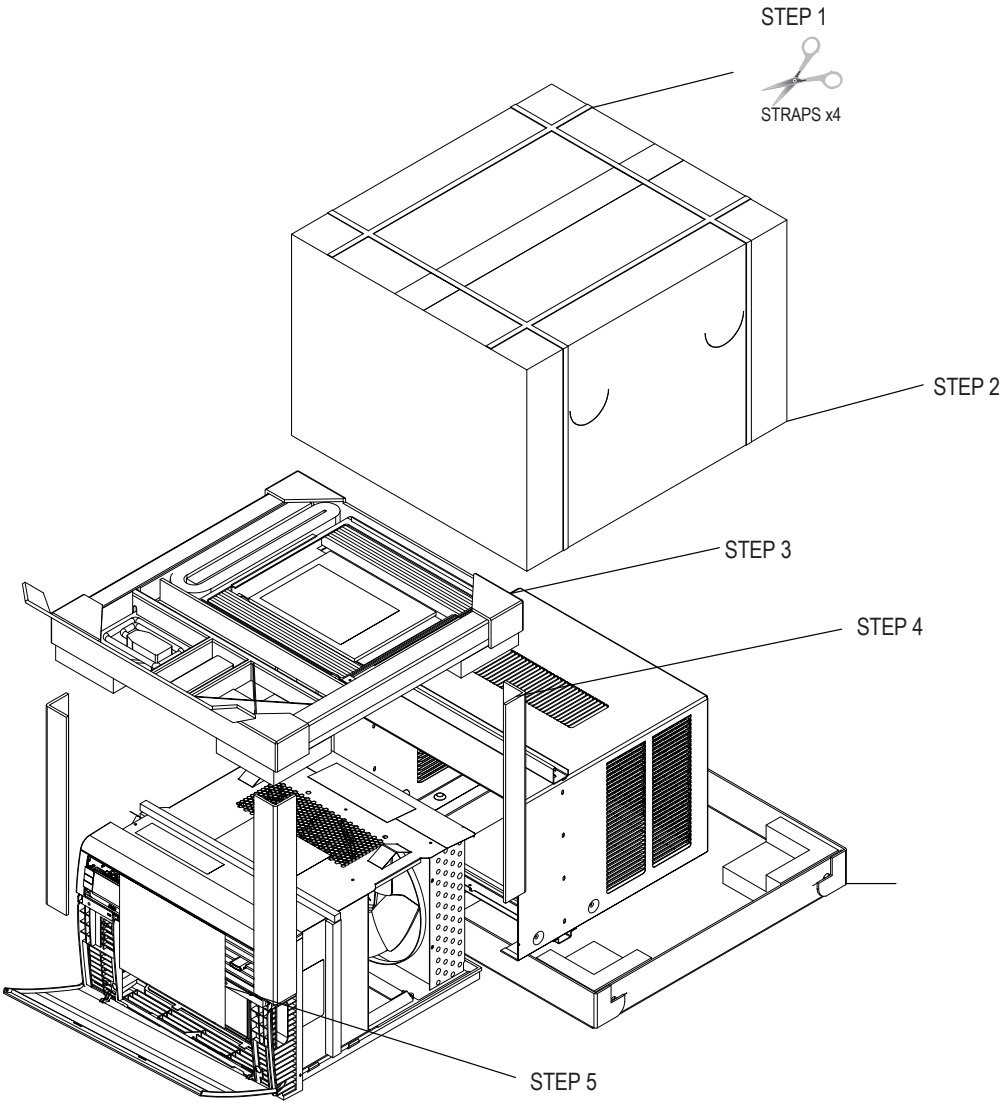

Figure A.4

A. IMPORTANT SAFETY AND GENERAL INFORMATION

A.5 Importance of a Quality Installation

Optimal system performance and longevity depend upon a quality and proper installation. Failure to properly install this unit could result in undesirable operation and subsequent faults and potential failures.

Carefully follow all guidelines listed in the manual and industry best practices. Conform to all local code requirements. Contact your local technical representative with any questions or concerns.

Upon receiving the unit, inspect it for any damage from shipment. Claims for damage, either shipping or concealed, should be filed immediately with the shipping company. IMPORTANT: Check the unit model number, Cooling size, electrical characteristics, and accessories to determine if they are correct.

⚠ WARNING: Check the unit power cord and make sure the cord is protected from wear, corrosion, excessive pressure, vibration, sharp edges, or any other adverse environmental effects. It is recommended that the cord is checked for any potential damage when filter maintenance is performed. If the supply cord is damaged, it must be replaced by the manufacturer, its service agent or similarly qualified persons in order to avoid a hazard.

⚠ WARNING: If the unit appears damaged, or if a refrigerant leak is suspected, do not install. Contact a licenced repair person to perform a leak check on the unit.

⚠ WARNING: Under no circumstances shall potential sources of ignition be used in the searching for or detection of refrigerant leaks. A halide torch (or any other detector using a naked flame) shall not be used. The following leak detection methods are deemed acceptable for all refrigerant systems. Electronic leak detectors may be used to detect refrigerant leaks but, in the case of FLAMMABLE REFRIGERANTS, the sensitivity may not be adequate, or may need re-calibration. (Detection equipment shall be calibrated in a refrigerant-free area.) Ensure that the detector is not a potential source of ignition and is suitable for the refrigerant used. Leak detection equipment shall be set at a percentage of the LFL.

⚠ WARNING: Service of this product (aside from filter maintenance) shall only be performed by trained service personnel. This includes:

Opening of any tubing or refrigerant circuit work

Opening of any sealed components

Enclosures beyond the hinged door for filter cleaning

Scan this QR code to be linked to the Friedrich professional support page where you can locate the Service Manual.

A.6 Packing List

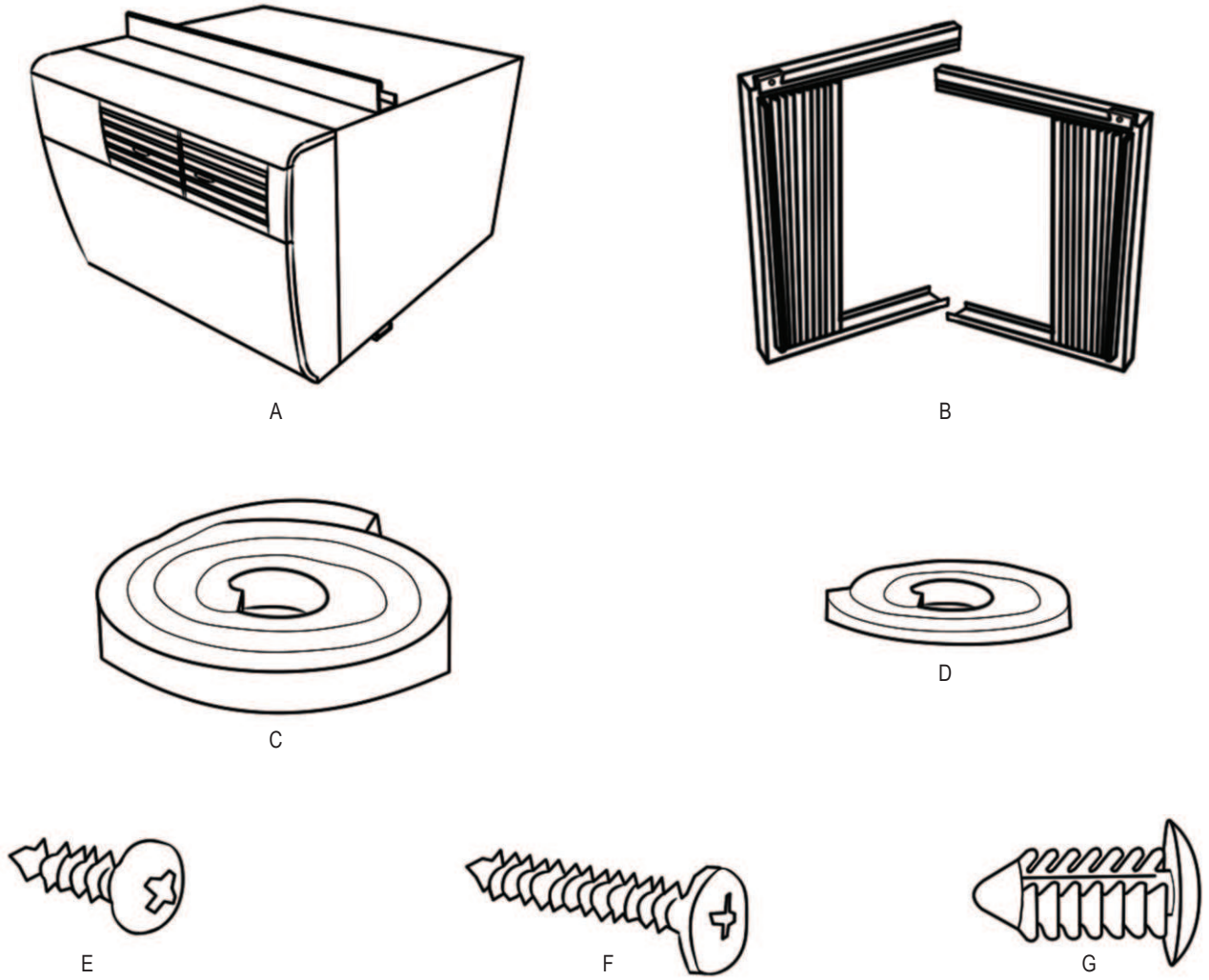

Installation Hardware		
ITEM NO	DESCRIPTION	QTY.
A	Q KÜHL UNIT	1
B	Q SIDE CURTAINS (INCLUDES 8 PUSH PINS)	2
C	WINDOW SEAL GASKET	1
D	SHELL GASKET (ADHESIVE-BACK) for replacement installations only	1
	Carbon Filter	
	Remote Control	
	R1 Insulation Panel	

Installation Hardware		
ITEM NO	DESCRIPTION	QTY.
E	SCREW #8 x ½" (BLUE BAG)	4
F	SCREW #8 x 1 ¼" (GREY BAG)	3
G	SPARE PUSH PINS	4

Figure A.6 (Packing List)

B. SPECIFICATIONS

B.1 Product Data

The Kühl gives you a variety of options for control, programming, and scheduling including wireless capabilities.

Wireless Programming and Control:

Friedrich Connect allows you to conveniently control, program, and monitor your air conditioning unit remotely from a smartphone or computer.

Pre-Programmed Timer Options:

Your unit's digital control comes equipped with a 24-hour timer.

24-Hour Timer

The 24-hour timer allows you to set 2 temperature changes at pre-set times or a unit control panel.

Customizable Programming Options:

Customizable timers, with up to four temperature adjustments per day, can be set using Friedrich Connect for one or multiple units.

See www.friedrich.com for complete details on Friedrich Connect.

B.3 Outdoor Use

The only section of this air conditioner acceptable for outdoor use is designated by the dotted area in the image below. To ensure the protection of parts not acceptable for outdoor use please follow the installation instructions as shown in this document. Please note that junction and electrical boxes are not acceptable for outdoor use.

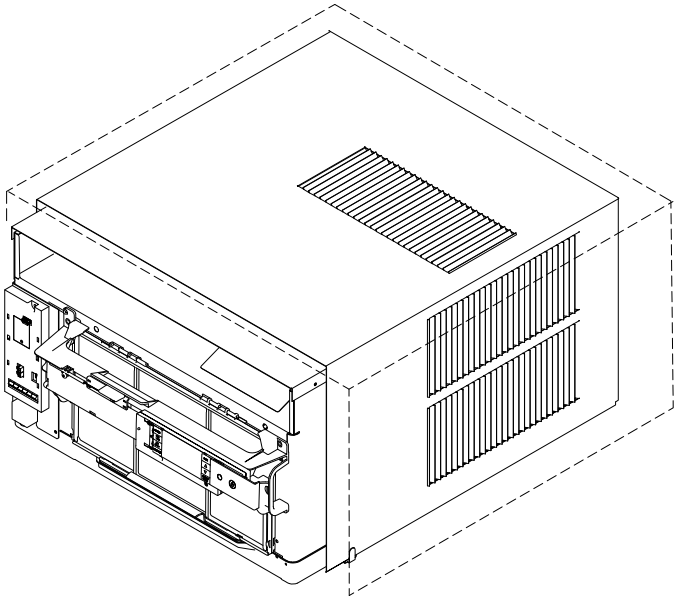

B.2 Model Identification Guide

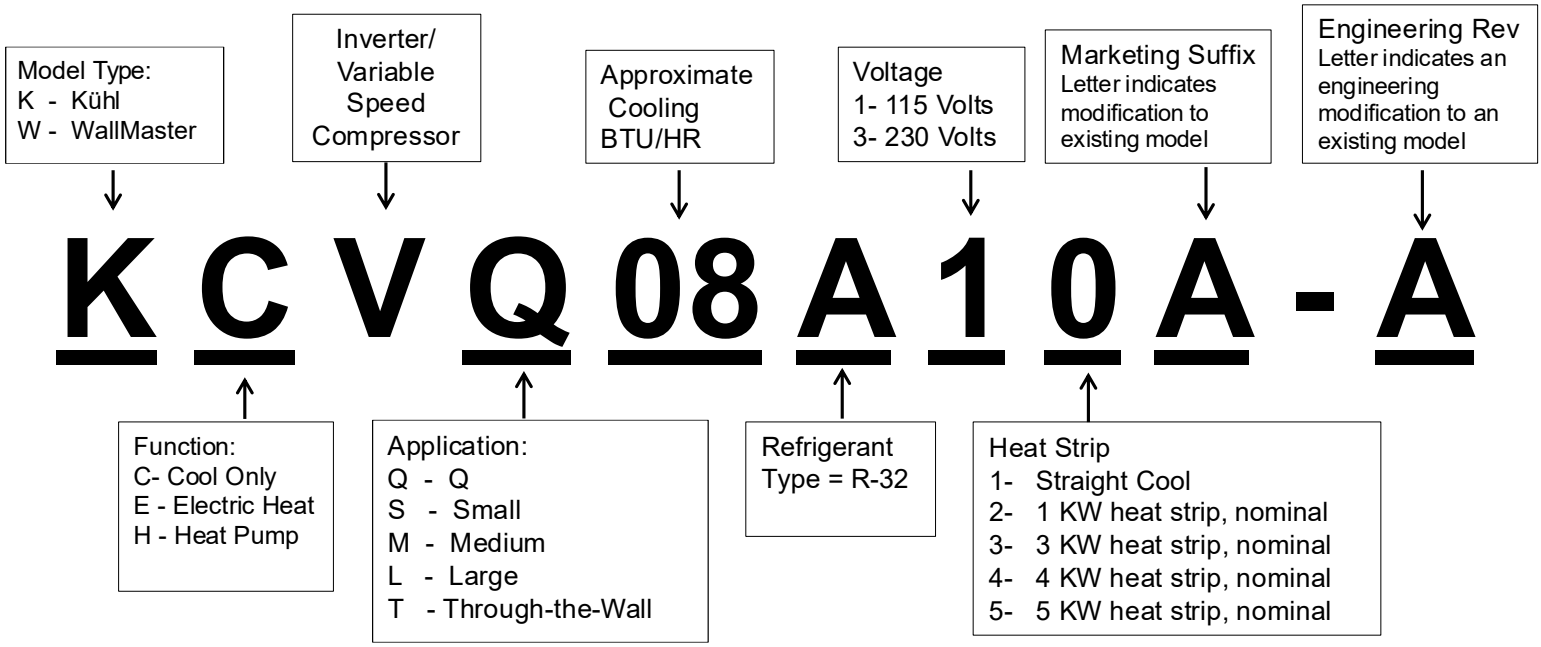

C. INSTALLATION OF THE UNIT

C.1 Pre-Installation Checkpoints

Before attempting any installation, carefully consider the following points:

- Clearances and provision for servicing. Install this unit in accordance with local and national standards. Any and all work must be done by authorized personnel.
- IMPORTANT: Before you begin the actual installation of your air conditioner, check your local electrical codes and the information below. Your air conditioner must be connected to a power source with the same alternating current (A.C.) voltage and amperage as marked on the name plate located on the chassis. Only A.C. can be used. Direct Current (D.C.) cannot be used.
- CIRCUIT PROTECTION – Use on single outlet circuit only. An overloaded circuit will invariably cause malfunction or failure of an air conditioner; therefore, it is necessary that the electrical protection is adequate. Due to momentary high current demand when the air conditioner starts, use a "TIME DELAY" fuse or a HACR type circuit breaker. Consult your dealer or power company if in doubt.
- Refer to the electrical name plate located on the air conditioner chassis (see Table E.1 to determine the correct fuse or circuit breaker amperage for your model.
- The power cord has a plug with a grounding prong and a matching receptacle is required.

C.2 Tools Required

⚠ WARNING

Electrical Shock Hazard

Make sure your electrical receptacle has the same configuration as your air conditioner's plug. If different, consult a Licensed Electrician.

Do not use plug adapters.
Do not use an extension cord.
Do not remove ground prong.

Always plug into a grounded 3 prong outlet. Failure to follow these instructions can result in death, fire, or electrical shock.

1. Power Drill
2. 5/32" Drill Bit
3. Gloves
4. Carpenters Level
5. 5/16" Wrench
6. 1/4" Wrench
7. #2 Phillips Screw Driver
8. Putty Knife or (wood stir stick)
9. 1/4" Nut Driver

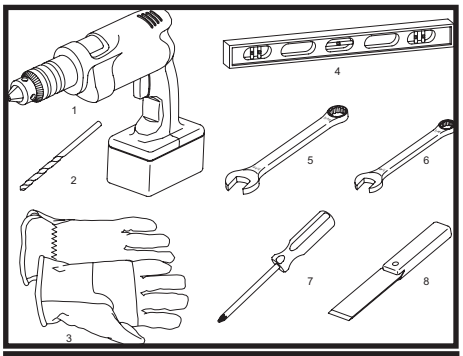

Figure C.2 (Tools)

C.3. Choosing a Location

Installation Clearances

Improper installation of the Air Conditioner can cause poor performance and premature wear of the unit.
Ensure that the KUHL unit is installed with proper clearances as described below.
Ensure no obstructions or enclosures are within clearances limits to allow for proper airflow.
Ensure no open flames, or surfaces that will exceed 1000 degrees Fahrenheit are within clearances limits.

⚠ WARNING

Refigeration System Under High Pressure

Do not puncture, heat, expose to flame or incinerate.
Only certified refrigeration technicians should service this equipment.
R410A and R32 systems operate at higher pressures than R22 equipment.
Appropriate safe service and handling practices must be used.
Only use gauge sets designed for use with R410A or R32.
Do not use standard R22 gauge sets..

Clearances

Top and Bottom of Unit - One (1) foot
Sides of Unit - One (1) foot
Front of Unit - Three (3) feet
Rear of Unit - Three (3) feet

⚠ CAUTION

Moving Parts Hazard

Do not operate unit out of sleeve or with front grille removed.
Do not place hands in blower or fan blade areas.
Failure to do so can result in serious injury

⚠ CAUTION

Excessive Weight Hazard

Use two or more people when installing your air conditioner.
Failure to do so can result in back or other injury.

C. INSTALLATION OF THE UNIT

C.4 Window Installation

⚠ WARNING

Falling Object Hazard

Not following Installation Instructions for mounting your air conditioner can result in property damage, injury, or death.

STEP 1. Fold down the sides of the carton bottom tray (see Figure C.4.1).

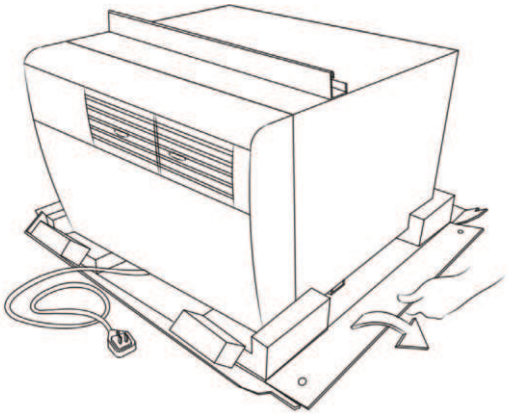

Figure C.4.1

STEP 2. Install side curtains (B in parts list) on both sides of the unit. Press in the attached push pins (4 on each side) to secure curtains to the sleeve (Figure 54).

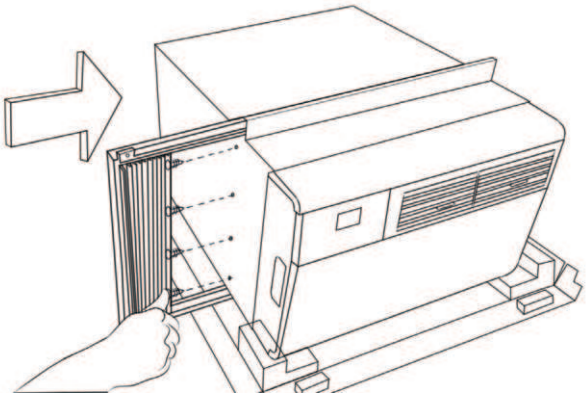

Figure C.4.2

⚠ WARNING

Fire Hazard

A2L refrigerant is classified as mildly flammable. Do not install unit next open flame sources, or surfaces that will exceed 1200 degrees fahrenheit.

STEP 3. Once both curtains have been installed, slide hands underneath the unit to lift and carry to the window, as shown in Figure C.4.3. Obtain assistance as needed.

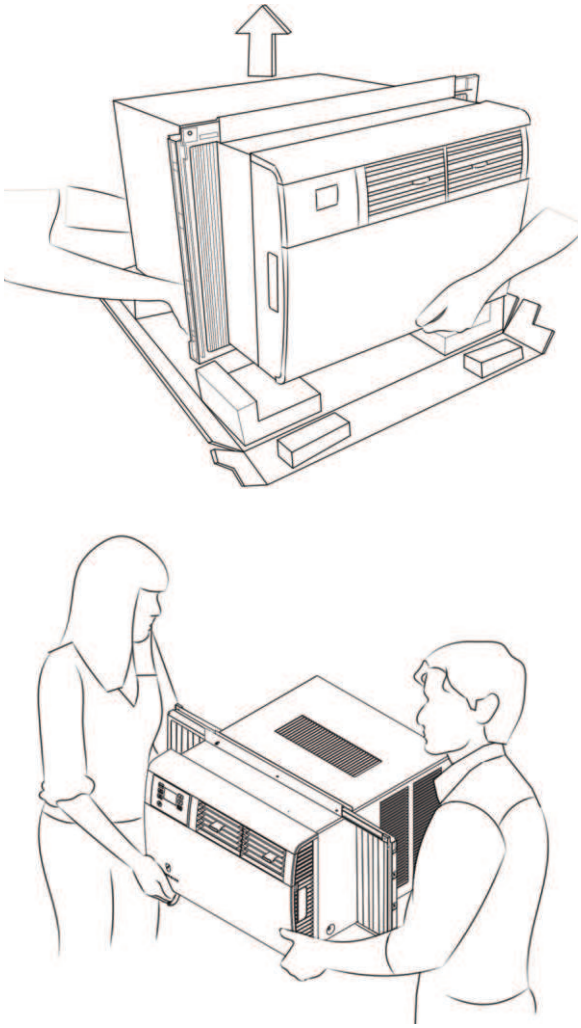

Figure C.4.3

⚠ CAUTION

Excessive Weight Hazard

Use two or more people when installing your air conditioner.

Failure to do so can result in back or other injury.

NOTICE

For YOUR security and safety, YOU must provide a means of preventing the upper part of the window from opening.

C.4 Window Installation (Continued)

STEP 4 Pull unit from sleeve, using the side handles located on either side of the decorative front. Obtain assistance as needed. Place unit out of the way on a secure, flat surface (Figure C.4.4).

STEP 5 Place the sleeve in window with the bottom support rail up against the back edge of the window sill. Center and close window sash onto upper support rail. The unit should be level or slightly tilted outside. Slope should be approximately 3/8" or 1/4 bubble on a level.

NOTE: Depending on the type of window, install the appropriate security lock as recommended by manufacturer.

STEP 6 Extend side curtains to fill window. Secure outer top corner of each curtain (left and right) to window jamb and/or window sash using supplied screws. Two sizes of screws (E and F in parts list) and 2 different screw hole locations have been provided to accommodate varying window types (See Figure C.4.5).

If you desire a more permanent installation, you can secure your curtains using both screw holes and your unit sleeve directly to the lower window stool using the instruction Step 7 shown next. If you choose the standard installation already covered in Steps 1 – 6, then you can proceed to Step 8.

NOTE: When removing unit from sleeve and carrying or handling unit, obtain assistance or help as necessary to support unit from bottom (basepan), maintaining clearance from all obstacles.

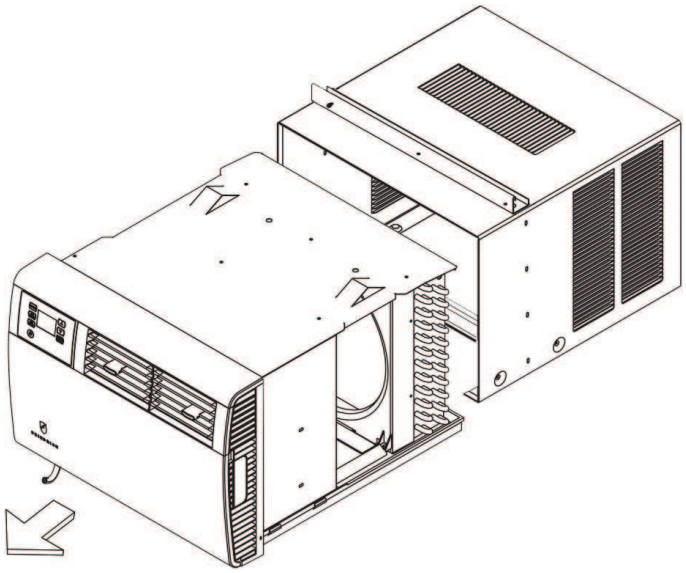

Figure C.4.4

STEP 7 Secure sleeve to window stool through screw hole in the bottom center of sill channel using 1 supplied 1 ¼" screw (F in parts list) (see Fig. C.4.5 Detail A).

In Step 6, the window curtains were secured using 1 supplied screw per curtain (2 screws total). For a more permanent application, you may secure each curtain with an additional screw through the remaining screw hole, insuring each window curtain is secured to window jamb and sash with 2 screws each (4 screws total). Two sizes of screws (E and F in parts list) have been provided to accommodate varying window types (see Figure C.4.5).

NOTE: Securing the curtains using both screw hole locations may not work in certain window types. For those applications, use only 1 screw per curtain and install the appropriate security lock as recommended by window manufacturer.

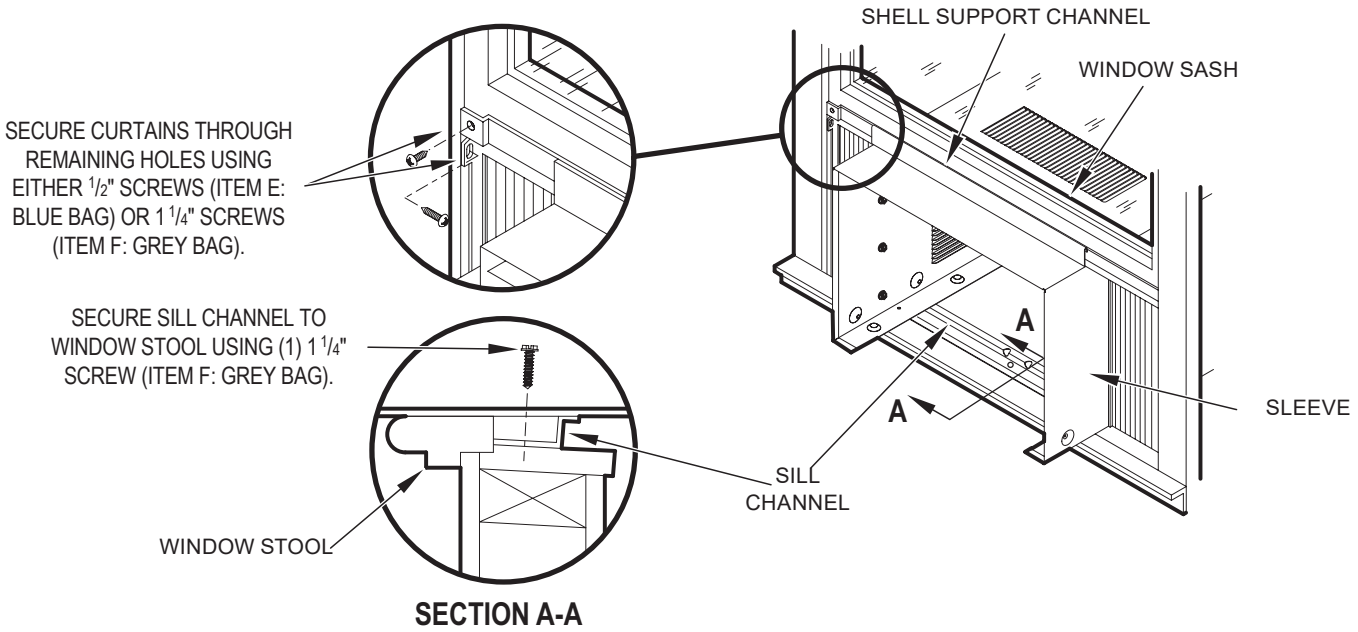

Figure C.4.5

C. INSTALLATION OF THE UNIT

C.4 Window Installation (Continued)

STEP 8 Inspect unit prior to inserting back into sleeve. Manually rotate fan to see that it turns freely. Make sure electrical cord is positioned in the front of unit and out of the way when inserting it back into the sleeve.

Insert unit back into sleeve by positioning onto bottom rails of sleeve and pushing back into place. Obtain assistance as needed (see Figure C.4.6).

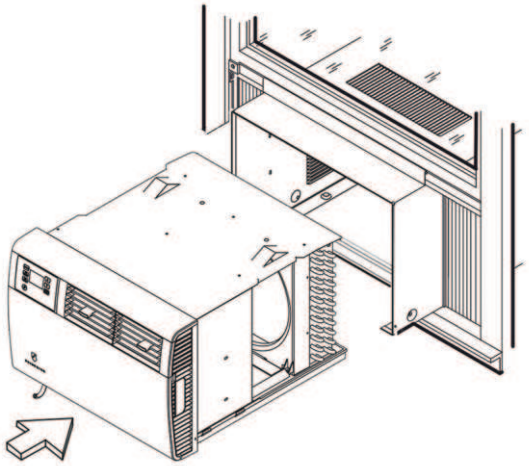

Figure C.4.6

⚠ CAUTION

Excessive Weight Hazard

Use two or more people when installing your air conditioner.

Failure to do so can result in back or other injury.

NOTE: WHEN REMOVING UNIT FROM SLEEVE AND CARRYING OR HANDLING UNIT, OBTAIN ASSISTANCE OR HELP AS NECESSARY TO SUPPORT UNIT FROM BOTTOM (BASEPAN), MAINTAINING CLEARANCE FROM ALL OBSTACLES.

STEP 9. Cut the window seal gasket (C in parts list) to match the window width and insert it between the window sashes as shown in Figure C.4.7.

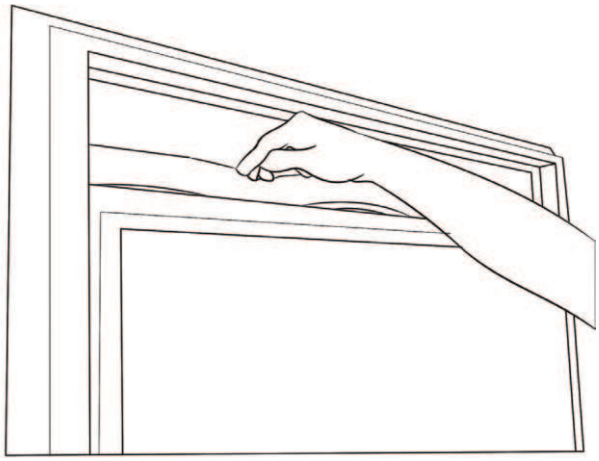

Figure C.4.7

STEP 10 Plug in unit.

Now that installation is complete, your unit is ready to operate! Simply plug in the power cord and follow the operation steps outlined in this manual or your QuickStart Guide.

CIRCUIT PROTECTION - If the air conditioner is circuit protected by a fuse, use a "TIME DELAY" fuse or HACR type circuit breaker due to momentary high current demand when your air conditioner is started. Before operating your unit, verify the ampere rating of the time-delay fuse or circuit breaker which protects your unit. The ampere rating of the time-delay fuse or circuit breaker shall be 15 amps.

⚠ WARNING

Electrical Shock Hazard

Make sure your electrical receptacle has the same configuration as your air conditioner's plug. If different, consult a Licensed Electrician.

Do not use plug adapters.
Do not use an extension cord.
Do not remove ground prong.

Always plug into a grounded 3 prong outlet. Failure to follow these instructions can result in death, fire, or electrical shock.

EntryGard™ Security Lock

For additional safety, your unit is equipped with EntryGard™ protection, a feature that helps prevents kick-in intrusions. To engage this feature, use 2 supplied 1/2" screws (E in parts list) to secure decorative front cover to sleeve. See Figure C.4.8 for screw hole locations.

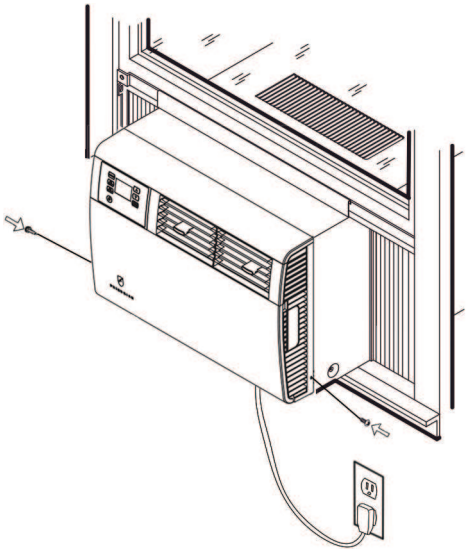

Figure C.4.8

C.5 Thru-the Wall Installation

STEP 1. After removing the unit from shipping carton, slide chassis out of sleeve. Hold the cabinet stationary. Then, use the hand grips on both ends of the control unit support bracket to pull the chassis out of the cabinet. (See figure C.5.1)

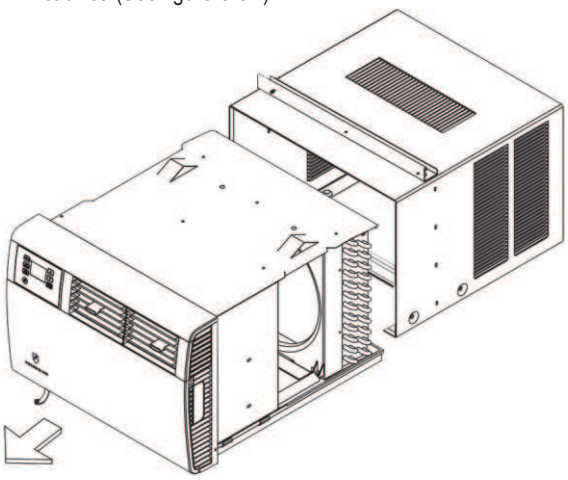

Figure C.5.1

STEP 2. Remove shell channel from top of the sleeve (Figure C.5.2).

NOTE: Not applicable to heat pump models sold without quick mounting sleeve.

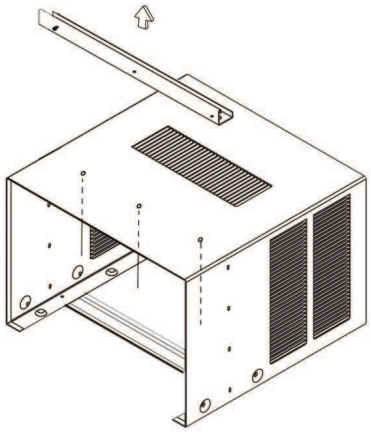

Figure C.5.2

⚠ WARNING

Falling Object Hazard

Not following Installation Instructions for mounting your air conditioner can result in property damage, injury, or death.

⚠ WARNING

Fire Hazard

A2L refrigerant is classified as mildly flammable. Do not install unit next open flame sources, or surfaces that will exceed 1200 degrees fahrenheit.

STEP 3. **Layout** - Cut and frame-in an opening in the desired wall area using the illustration as a guide (Figure C.5.3).

STEP 4. Place the sleeve in the framed opening.

NOTE: Not applicable to heat pump models sold without quick mounting sleeve.

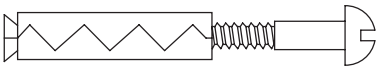

EXPANSION ANCHOR BOLT

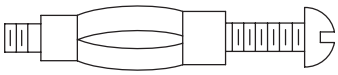

MOLLY OR TOGGLE BOLT

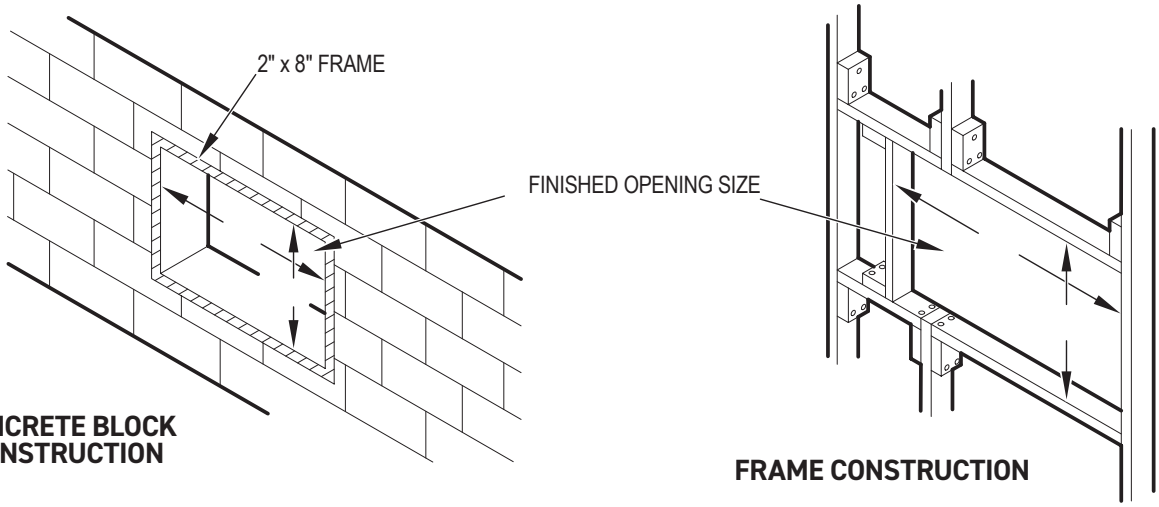

Figure C.5.3

C. INSTALLATION OF THE UNIT

C.5 Thru-the Wall Installation (Cont.)

STEP 5 Position the front edge to extend into the room 3/4" minimum at top of sleeve and 1" minimum at bottom (Figure C.5.4).

STEP 6 Secure each side of the sleeve with supplied 1 1/4" screw (F in parts list) or nails through the holes in the sides.

NOTE: Alternate fasteners which may be used for securing the unit sleeve to a wall, including masonry walls, are not furnished (available at local hardware stores).

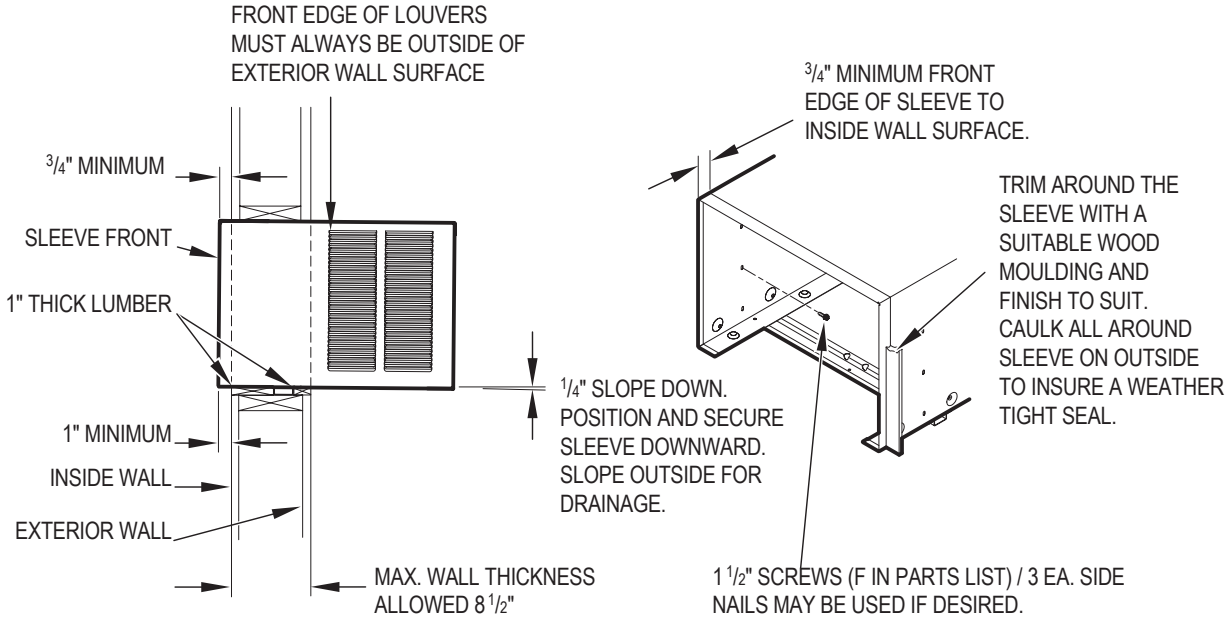

Figure C.5.4

STEP 7 Cut two pieces of standard 1" lumber (supplied by installer) to the length and width required. Place in front and back of bottom sill channel as shown in Figure C.5.4. Secure with nails (supplied by installer).

STEP 8 Seal all holes in the sleeve with caulking compound (supplied by installer).

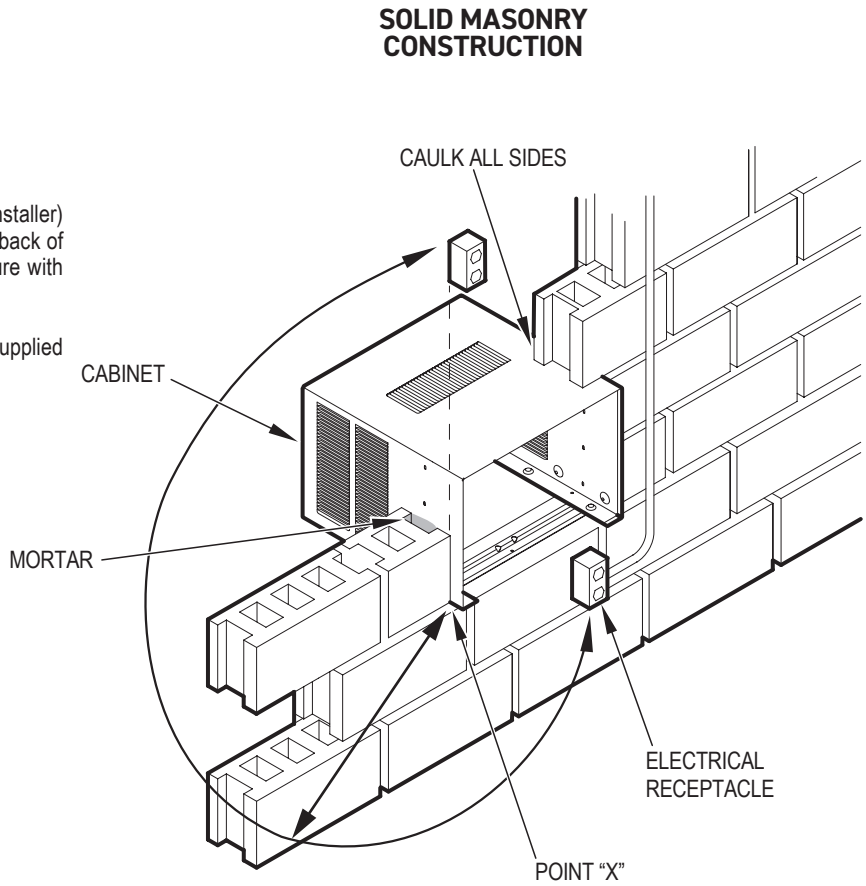

NOTE: ELECTRICAL RECEPTACLE LOCATION FROM POINT "X" MUST BE WITHIN A MAXIMUM RADIUS OF 69" FOR 115V UNITS.

Figure C.5.5

C.5 Thru-the Wall Installation (Cont.)

STEP 9 Inspect unit prior to inserting back into sleeve. Manually rotate fan to see that it turns freely. Make sure electrical cord is positioned in the front of unit and out of the way when inserting it back into the sleeve.

Insert unit back into sleeve by positioning onto bottom rails of sleeve and pushing back into place. Obtain assistance as needed (see Figure C.5.6).

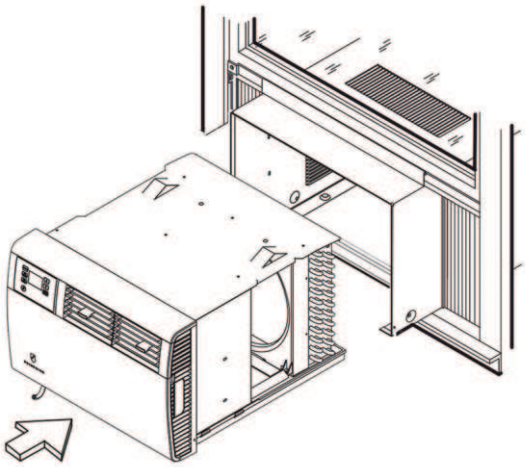

Figure C.5.6

⚠ WARNING

Falling Object Hazard

Not following Installation Instructions for mounting your air conditioner can result in property damage, injury, or death.

CIRCUIT PROTECTION - If the air conditioner is circuit protected by a fuse, use a "TIME DELAY" fuse or HACR type circuit breaker due to momentary high current demand when your air conditioner is started. Before operating your unit, verify the ampere rating of the time-delay fuse or circuit breaker which protects your unit. The ampere rating of the time-delay fuse or circuit breaker shall be 15 amps.

⚠ WARNING

Electrical Shock Hazard

Make sure your electrical receptacle has the same configuration as your air conditioner's plug. If different, consult a Licensed Electrician.

Do not use plug adapters.
Do not use an extension cord.
Do not remove ground prong.

Always plug into a grounded 3 prong outlet. Failure to follow these instructions can result in death, fire, or electrical shock.

STEP 10 Plug in unit.

Now that installation is complete, your unit is ready to operate! Simply plug in the power cord and follow the operation steps outlined in this manual or your QuickStart Guide.

EntryGard™ Security Lock

For additional safety, your unit is equipped with EntryGard™ protection, a feature that helps prevents kick-in intrusions. To engage this feature, use 2 supplied 1/2" screws (E in parts list) to secure decorative front cover to sleeve. See Figure C.5.7 for screw hole locations.

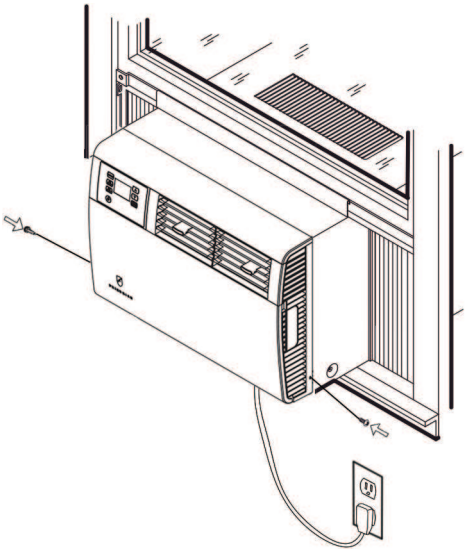

Figure C.5.7

C. INSTALLATION OF THE UNIT

C.6 Cord Routing Change

Unplug unit.

Your Kühl Q unit will come with the power cord already installed and routed to the left side of the unit.

For convenience and optimum appearance the direction of the power cord can be changed from left to right by following the procedure below. Select the exit location on the left or right based on proximity to the power outlet.

STEP 1. Remove the decorative front cover.

A. Open the decorative front cover. (See figure C.6.1)

B. Locate and disconnect electronic control power cable harness. (See figure C.6.1)

C. Remove 4 screws attaching decorative front cover. Save to reinstall later. (See figure C.6.2)

D. Remove decorative front cover. Store in a safe place to reinstall later.

⚠ WARNING

Electrical Shock Hazard

Make sure your electrical receptacle has the same configuration as your air conditioner's plug. If different, consult a Licensed Electrician.

Do not use plug adapters.
Do not use an extension cord.
Do not remove ground prong.

Always plug into a grounded 3 prong outlet. Failure to follow these instructions can result in death, fire, or electrical shock.

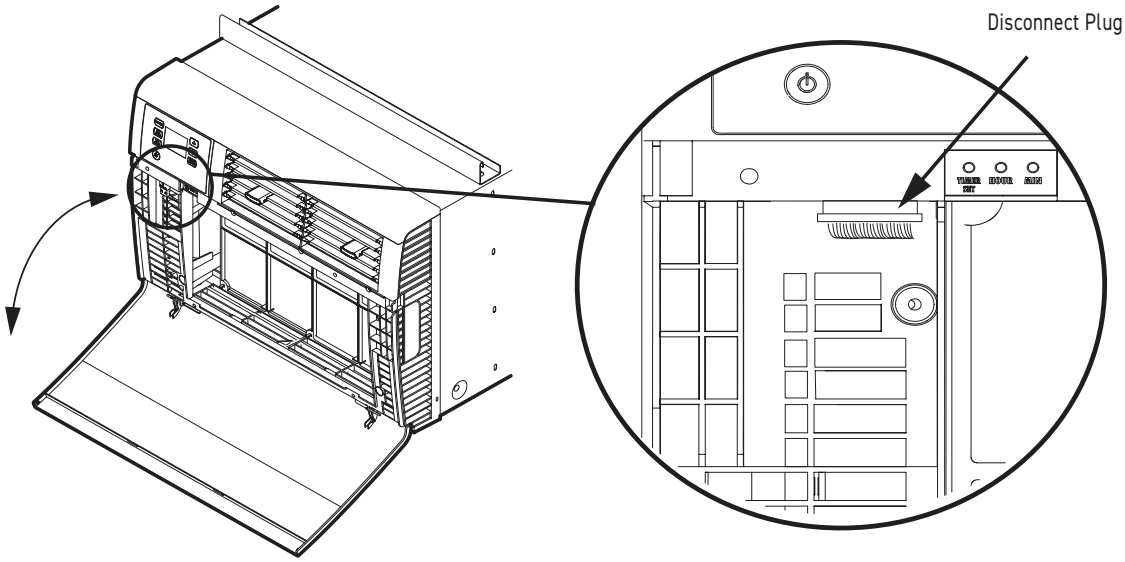

Figure C.6.1

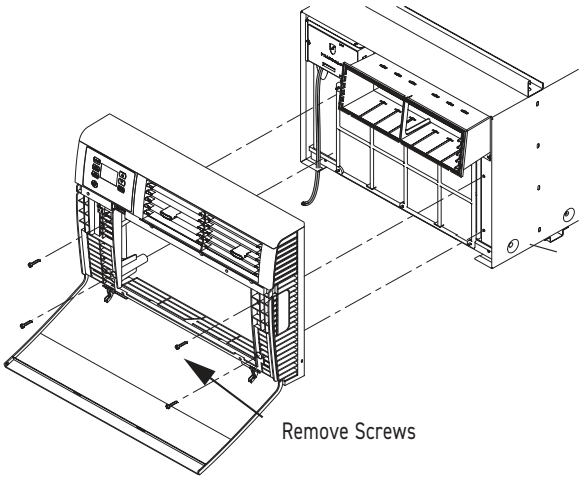

Figure C.6.2

STEP 2. Route the cord along bottom inside of the unit (see Figures C.6.4 and C.6.5), under the lower left mounting screw embossments and exit the cord through right side cord opening (see Figure C.6.4) of the decorative front cover. Decorative front cover will keep cord in place.

STEP 3. Reinstall the 4 screws removed earlier to secure decorative front cover with cord exiting to the front bottom of the unit (4 screws retained from Step 1).

C.6 Cord Routing Change

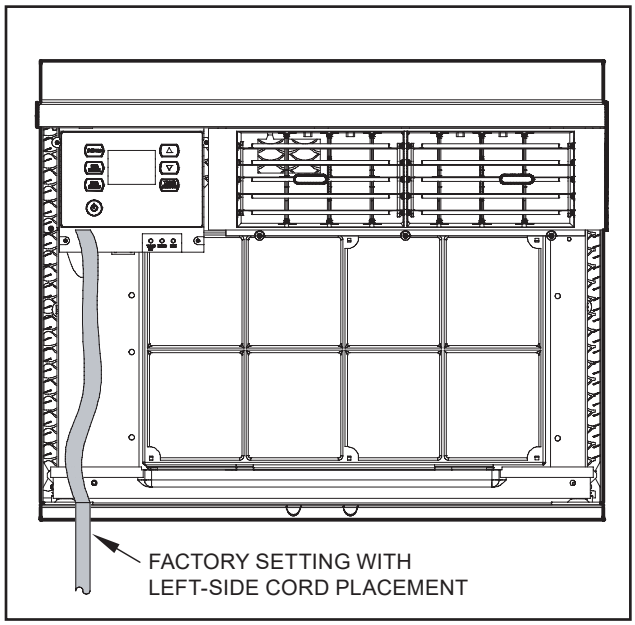

Figure C.6.3

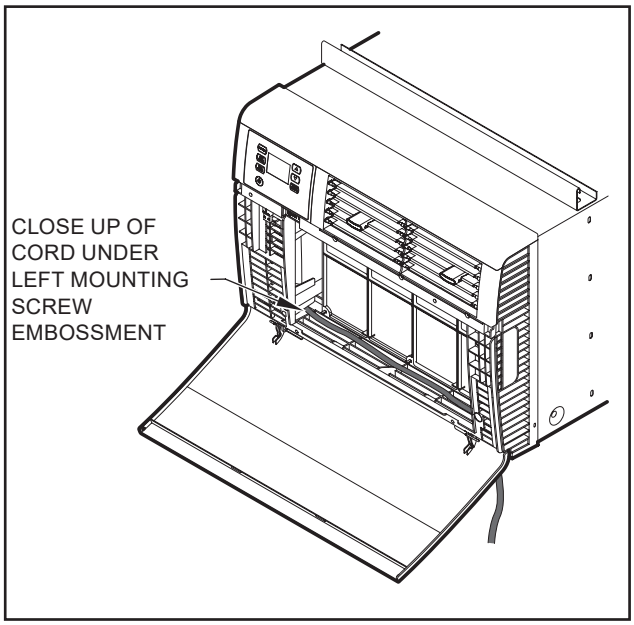

Figure C.6.5

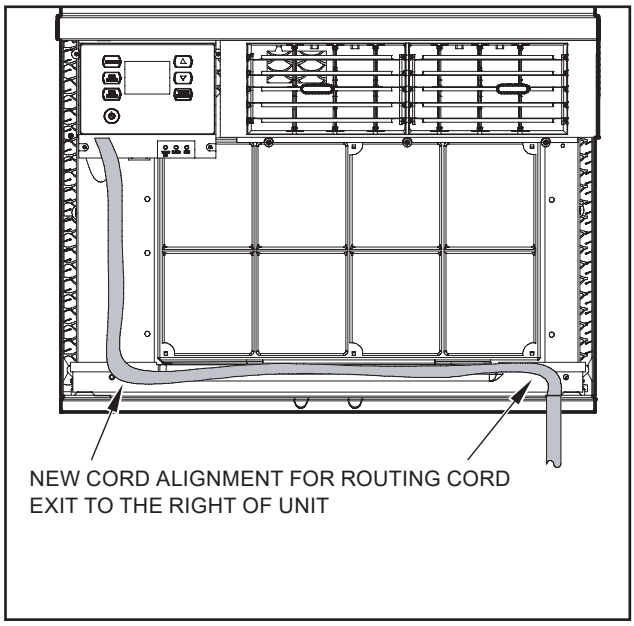

Figure C.6.4

C. INSTALLATION OF THE UNIT

C.7 Install Filter

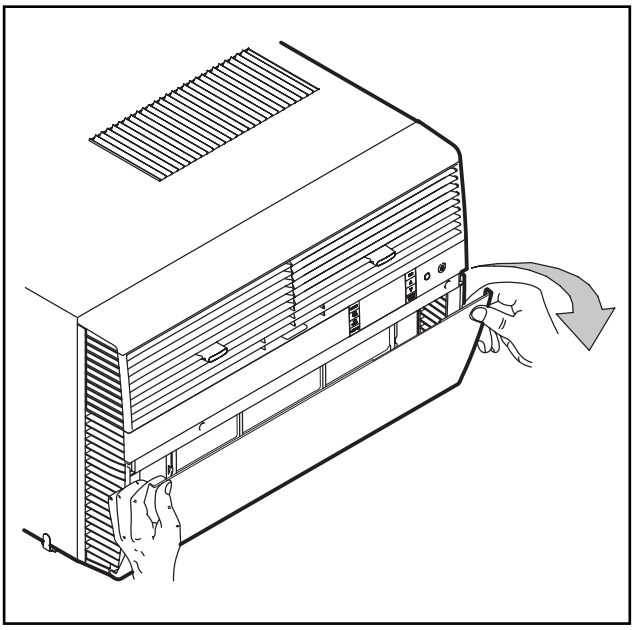

Figure C.7.1

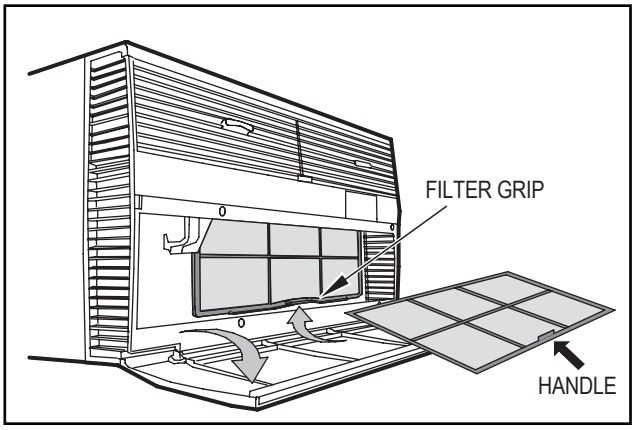

Figure C.7.2

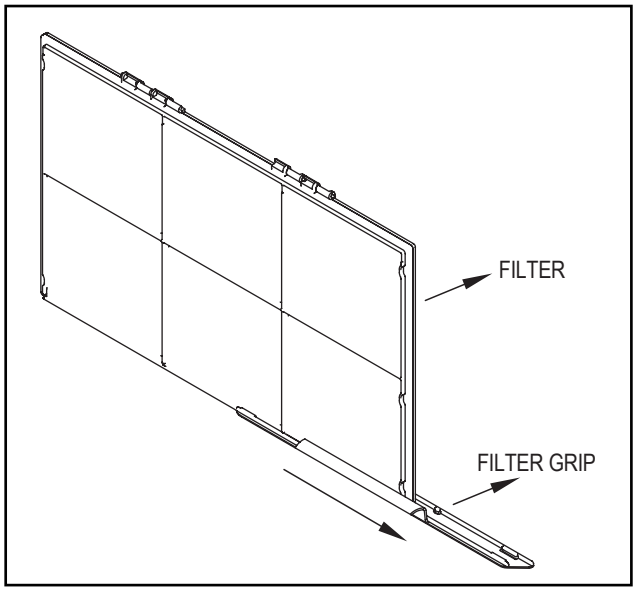

Figure C.7.3

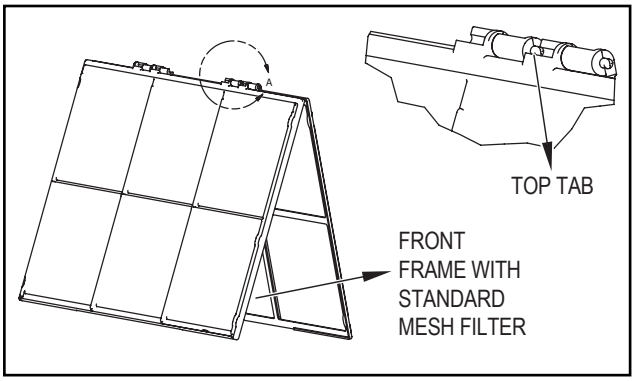

Figure C.7.4

STEP 1. Swing the door open and remove the filter by grasping the filter grip and pushing the filter holder upward and outward. (See Figure C.7.2)

STEP 2. Slide the filter grip out from the filter as shown in Figure C.7.3.

NOTE: Make sure the front frame with the mesh filter is facing you.

STEP 3. If you already have a carbon filter installed remove the dirty filter by laying the filter down and swinging open the front frame as shown in Figure C.7.4. Clean the front frame by washing the dirt from the filter. Use a mild soap solution if necessary. Allow filter to dry.

STEP 4. (Optional) Place the new carbon filter on the top of the back filter frame. The carbon filter has been cut to the correct dimension and should fit within the frame as shown in Figure C.7.5.

NOTE: The carbon filter is not a reusable filter, and needs to be replaced every three months for optimum efficiency.

STEP 5. Slide the filter handle back on to hold the frames together and slide the assembly into the unit as per the instructions on the door.

NOTE: The filter handle slides into the frame in only one direction. If the tab in the frame stops the handle from sliding in, slide the handle from the other direction. DO NOT FORCE THE HANDLE INTO THE FRAME.

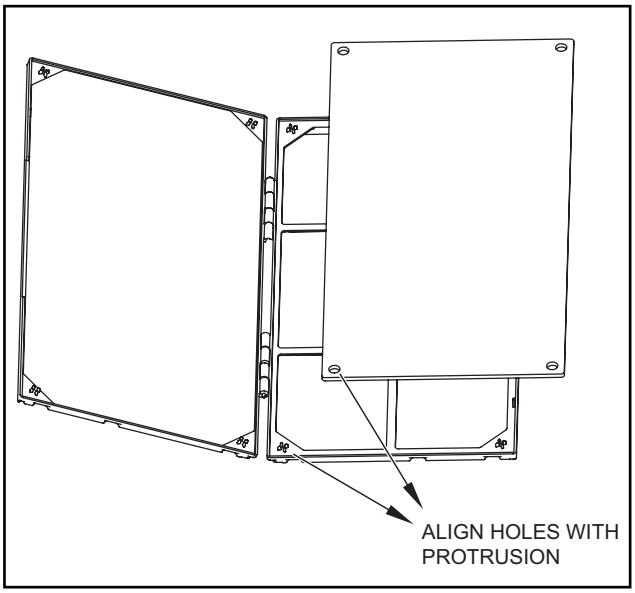

Figure C.7.5

E.1 Electrical Safety Information

⚠ WARNING

Electrical Shock Hazard

Make sure your electrical receptacle has the same configuration as your air conditioner's plug. If different, consult a Licensed Electrician.

Do not use plug adapters.
Do not use an extension cord.
Do not remove ground prong.

Always plug into a grounded 3 prong outlet. Failure to follow these instructions can result in death, fire, or electrical shock.

Make sure the wiring is adequate for your unit.

If you have fuses, they should be of the time delay type. Before you install or relocate this unit, be sure that the amperage rating of the circuit breaker or time delay fuse does not exceed the amp rating listed in Table 1.

DO NOT use an extension cord.

The cord provided will carry the proper amount of electrical power to the unit; an extension cord may not.

Make sure that the receptacle is compatible with the air conditioner cord plug provided.

Proper grounding must be maintained at all times. Two prong receptacles must be replaced with a grounded receptacle by a certified electrician.

The grounded receptacle should meet all national and local codes and ordinances. You must use the three prong plug furnished with the air conditioner. Under no circumstances should you remove the ground prong from the plug.

Table E.1

MODEL	CIRCUIT RATING OR TIME DELAY FUSE		REQUIRED WALL RECEPTACLE	
	AMP	VOLT	NEMA NO.	
KCVQ08B10A, KHVQ10B11A	15	125	5-15R	

E.2 Testing the Power Cord

All Friedrich room air conditioners are shipped from the factory with a Leakage Current Detection Interrupter (LCDI) equipped power cord. The LCDI device on the end of the cord meets the UL and NEC requirements for cord connected air conditioners.

To test your power supply cord:

1. Plug power supply cord into a grounded 3 prong outlet.
2. Press RESET (see Figure 1).
3. Press TEST, listen for click; the RESET button trips and pops out.
4. Press and release RESET (Listen for click; RESET button latches and remains in). Check that the green LED light is on. The power cord is ready. for use.

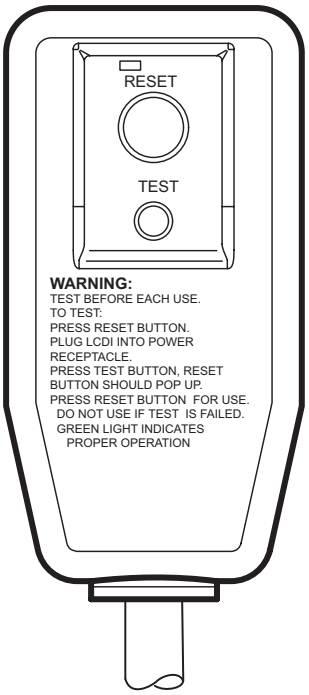

Once plugged in, the unit will operate normally without the need to reset the LCDI device. If the LCDI device fails to trip when tested or if the power supply cord is damaged, it must be replaced with a new power supply cord from the manufacturer.

NOTICE

Do not use the LCDI device as an ON/OFF switch.

Failure to adhere to this precaution may cause premature equipment malfunction.

J. STARTUP AND OPERATION

J.1 Final Inspection

- Inspect and ensure that all components and accessories have been installed properly and that they have not been damaged during the installation progress.
- Check the condensate water drain(s) to ensure that they are adequate for the removal of condensate water, and that they meet the approval of the end user.
- Ensure that all installation instructions concerning clearances around the unit have been adhered to. Check to ensure that the unit air filter, indoor coil, and outdoor coil are free from any obstructions.
- Inspect the unit for any damage to the coils and tubing that could cause a leak.
- Ensure that the circuit breaker(s) or fuse(s) and supply circuit wire size have been sized correctly. If the unit was supplied with a power supply cord, insure that it is stored properly.
- Ensure that the entire installation is in compliance with all applicable national and local codes and ordinances having jurisdiction.
- Secure components and accessories, such as a decorative front cover.
- Start the unit and check for proper operation of all components in each mode of operation.
- Instruct the owner or operator of the units operation, and the manufacturer's Routine Maintenance.

NOTE: A log for recording the dates of maintenance and/or service is recommended.

J.2 Airflow direction adjustment

The airflow path may be adjusted to distribute air independently from the left or right side of the discharge opening. Each of the banks of louvers can be directed left, right, up, or down in order to achieve the most optimum airflow positioning.

To adjust airflow direction, grab the lever in the center of the louver bank and move it in the direction that you would like the air to be directed. Please note that it is normal that airflow may be stronger out of one side of the louvers than the other.

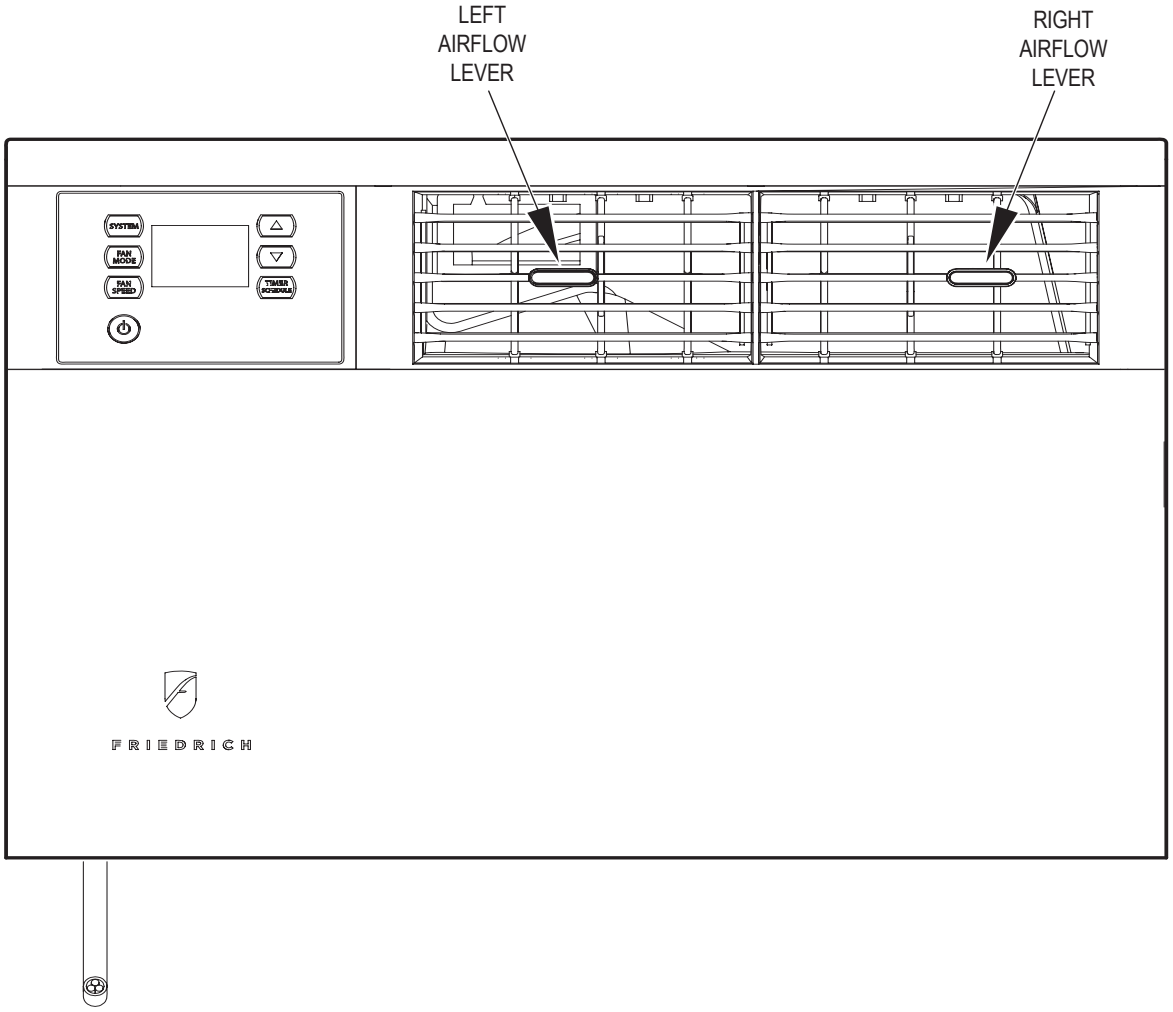

Figure J.2.1

J.3 Control Panel Operation

Power On – Press the button to turn on the air conditioner. The power button illuminates to indicate that the power is on. The backlight on the power switch will automatically turn off after 20 seconds of inactivity.

Display – The display is a high efficiency LCD with a built-in backlight. After 20 seconds of inactivity, the display switches off. Touching any button automatically changes the display to full brightness.

There are three control push buttons on each side of the display.

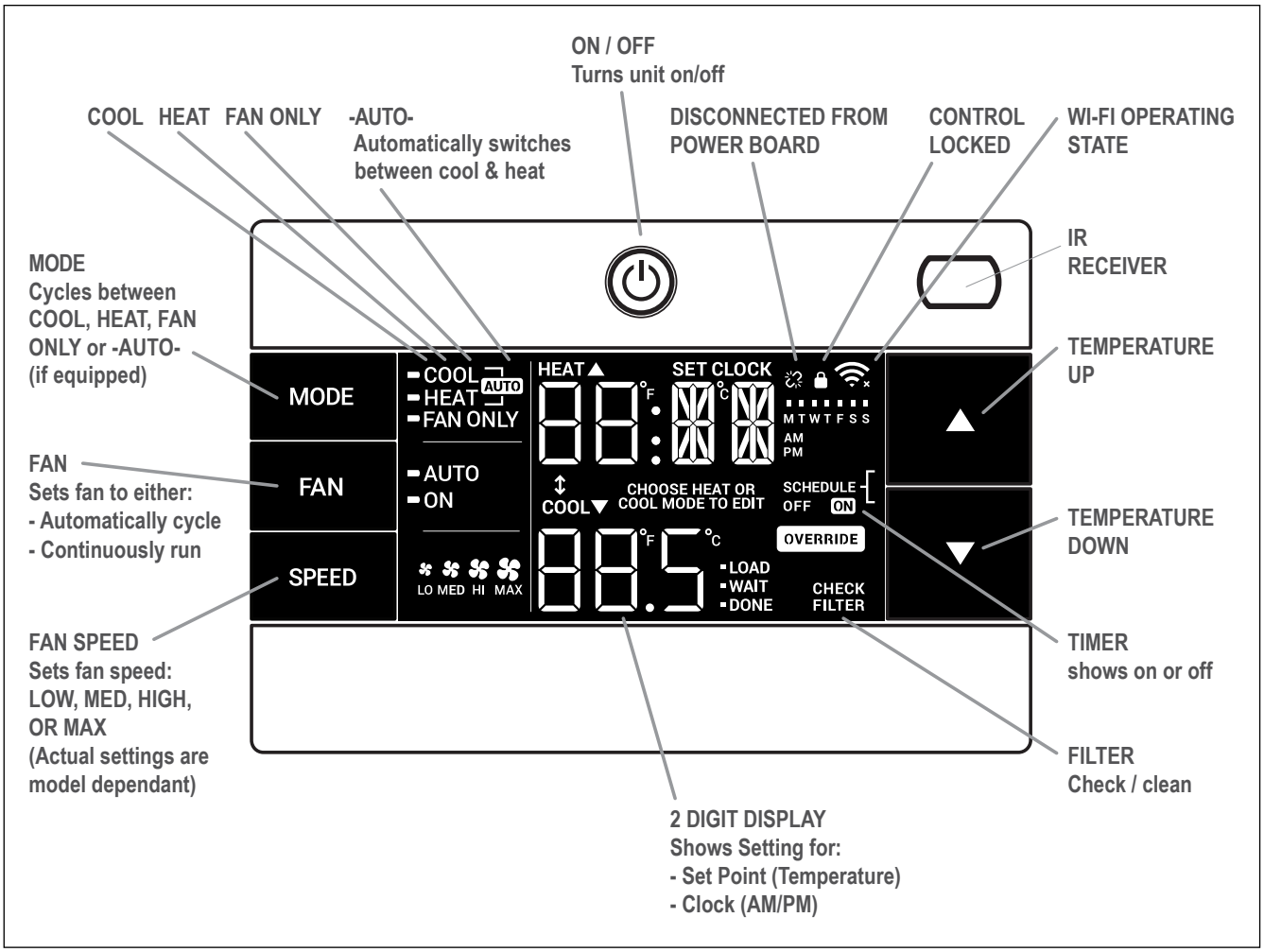

Figure J.3.1

J. STARTUP AND OPERATION

J.3 Control Panel Operation

SYSTEM - The **MODE** button allows you to sequentially select up to four modes of operation:

AUTO	Available on select models
COOL	
HEAT	Available on select models
FAN ONLY	

AUTO FAN (No Cooling Demand)

When in **AUTO** mode, the fan only operates when the system has a demand to cool or heat the room.

In the **ON** fan mode, the fan operates all the time. The system periodically cools or heats the fan's airflow but the flow of air does not stop.

UP and DOWN Arrows - Pressing either an **UP** or **DOWN** button changes the system's setpoint (desired room temperature). These buttons are also used to make system parameter changes later in this manual.

One press equals 1 degree of change in Fahrenheit mode. One press equals 0.5 degree change in Celsius mode.

TIMER

The timer can be engaged or disengaged from the control panel. This is done by pressing or holding the **UP** and **DOWN** arrows simultaneously for three seconds.

OTHER FUNCTIONS

°F – °C Select

To switch from degrees Fahrenheit (F) to Celsius (C), press the **MENU** button and enter the **F-C** sub-menu.

FAN SPEED - Depending on your model, the **FAN SPEED** button allows you to toggle between three or four modes of operation: LOW, MEDIUM, HIGH and MAX.

Alerts

When the filter needs to be cleaned or replaced, the **CHECK FILTER** icon displays.

The alert can be dismissed by pressing the **FAN MODE** and **SPEED** for 3 seconds.

Lock Control Panel

To lock/unlock the front panel controls, navigate to the "**LOCK**" sub-menu found after clicking the **MENU** button. The lock requires a four digit pass code to lock/unlock the unit. This pass code will be required to enter the menu to unlock the unit. The **LOCK** icon illuminates to indicate the locked status.

The **LOCK** icon disappears to indicate unlocked status.

External Control Status

The **Wi-Fi** icon illuminates to indicate that the system is receiving a Wi-Fi connection. The **Wi-Fi** icon also provides information about the signal strength.

ADVANCED FUNCTIONS

The functions mentioned in the following section may or may not be available depending on the air conditioner model.

Modify the TIMER Function

Navigate to the TIME menu to set the timer.

J.4 Remote Control Operation

Remote Control - Refer to Figure J.4.1 during operation description.

Getting Started - Install two (2) AAA batteries in the battery compartment located on the back of the unit.

Operation - The remote control should be within 25 feet of the air conditioner for operation. Press the power button to turn the remote on. The remote will automatically power off after 15 seconds if the buttons are not being pressed. The remote must be on to control the unit.

POWER Button - Turns remote and unit on and off.

SYSTEM Button - Allows the user to sequentially select the following: AUTO, COOL, HEAT, and FAN ONLY operations. When the button is pressed, the display indicates which mode has been selected via a display message. Note that when the heating function is not available, the system will automatically skip the HEAT mode.

FAN MODE Button - Selects between automatic (AUTO FAN) or CONTINUOUS operation. In the AUTO FAN mode, the fan only turns on and off when the compressor operates or the heat function is enabled.

NOTE: AUTO FAN is not available in the FAN ONLY Mode, the display indicates CONTINUOUS. In the CONTINUOUS mode, fan speed is determined by your selection on the FAN SPEED button.

FAN SPEED Button - Used to sequentially select new fan speed, plus **AUTO** operation. When the FAN SPEED button is pressed, the fan speed icon (triangle)

changes to indicate the new speed level. Fan speed automatically varies depending on the set temperature on the control panel and the actual room temperature. For example, if there is a big difference between your set temperature and the actual room temperature, the system fan speed increases to HIGH. It remains at this speed until the room temperature matches the set temperature.

UP and DOWN Arrows - Pressing either the UP or DOWN button changes the desired room temperature. The factory preset lower and upper limits are 60°F (16°C) and 99°F (37°C). These buttons are also used to navigate between function options when using the User Menu or Maintenance Mode.

Remote Effectiveness

Handheld Remote - Has an operating range of up to 25 ft. The infrared remote control signal must have a clear path to transmit the command to the air conditioning unit. The remote signal has some ability to "bounce" off of walls and furniture similar to a television remote control. The diagram below shows the typical operating range of the control in a standard room with 8 ft high ceilings.

J.5 Start-up

This is a warm weather appliance

Your air conditioner is designed to cool in warm weather when the outside temperature is above 60°F (15.6°C) and below 115°F (46.1°C), so it won't cool a room if it is already cool outside. If you want to cool a room in the spring or fall, select the FAN ONLY mode and set the Fresh Air/Exhaust air control to Fresh Air. This will bring in a supply of cooler outside air.

Condensation is normal

Air conditioners actually pump the heat and humidity from your room to the outside. Humidity becomes water, and your air conditioner will use most of the water to keep the outside coil cool. If there is excessive humidity, there may be excess water that will drip outside. This is normal operation.

Frosting

This usually occurs because of insufficient airflow across the coils, a dirty filter, cool damp weather, or all these. Set the SYSTEM mode to FAN ONLY and the frost will disappear. Setting the thermostat a little warmer will probably prevent the frosting from recurring.

Noises

All air conditioners make some noise. Friedrich units are designed to operate as quietly as possible. An air conditioner mounted in a wall is quieter than one mounted in a window. It is important to ensure that the chassis seal gasket (Item 13) is properly installed (refer to the Installation Instructions).

NOTICE

This unit is certified to operate in cooling mode under these maximum conditions. Any operation beyond these conditions may result in intermittent operation.
Indoor temperature: 90 °F (45% relative humidity)
Outdoor temperature: 110 °F (25% relative humidity)
If unit is heat pump equipped, it is certified to operate in heating mode under these maximum conditions. Any operation beyond these conditions may result in intermittent operation.
Indoor temperature: 80 °F (humidity does not affect operation)
Outdoor temperature: 70 °F (60% relative humidity)

L. WiFi

This model is currently compatible with Friedrich Connect and Alexa, but not Google Connect. Use a QR Reader on your phone to scan this QR Code. It will take you to the Wifi Instructions page of our website.

M. TROUBLESHOOTING

M.1. Troubleshooting Tips

COMPLAINT	CAUSE	SOLUTION
Unit does not operate.	• The unit is turned to the off position, or the thermostat is satisfied.	• Turn the unit to the on position and raise or lower temperature setting (as appropriate) to call for operation.
	• The LCDI power cord is unplugged.	• Plug into a properly grounded 3 prong receptacle. See “Electrical Rating Tables” on Page 6 for the proper receptacle type for your unit.
	• The LCDI power cord has tripped (Reset button has popped out).	• Press and release RESET (Listen for click. Reset button latches and remains in.) to resume operation.
	• The circuit breaker has tripped or the supply circuit fuse has blown.	• Reset the circuit breaker, or replace the fuse as applicable. If the problem continues, contact a licensed electrician.
	• There has been a local power failure.	• The unit will resume normal operation once power has been restored.
Unit Trips Circuit Breaker or Blows Fuses.	• Other appliances are being used on the same circuit.	• The unit requires a dedicated outlet circuit, not shared with other appliances.
	• An extension cord is being used.	• Do NOT use an extension cord with this or any other air conditioner.
	• The circuit breaker or time-delay fuse is not of the proper rating.	• Replace with a circuit breaker or time-delay fuse of the proper rating. See “Electrical Rating Tables” on Page 6 for the proper circuit breaker/ fuse rating for your unit. If the problem continues, contact a licensed electrician.
LCDI Power Cord Trips (Reset Button Pops Out).	• The LCDI power cord can trip (Reset button pops out) due to disturbances on your power supply line.	• Press and release RESET (Listen for click. Reset button latches and remains in.) to resume normal operation.
	• Electrical overload, overheating, or cord pinching can trip (Reset button pops out) the LCDI power cord.	• Once the problem has been determined and corrected, press and release RESET (Listen for click. Reset button latches and remains in.) to resume normal operation.
	NOTE: A damaged power supply cord must be replaced with a new power supply cord obtained from the product manufacturer and must not be repaired. The power cord must be replaced by trained service personnel.	
Unit Does Not Cool/ Heat Room Sufficiently, or Cycles On And Off Too Frequently.	• The return/ discharge air grille is blocked.	• Ensure that the return and/ or discharge air paths are not blocked by curtains, blinds, furniture, etc.
	• Windows or doors to the outside are open.	• Ensure that all windows and doors are closed.
	• The temperature is not set at a cool enough/ warm enough setting.	• Adjust the Temperature control to a cooler or warmer setting as necessary.
	• The filter is dirty or obstructed.	• Clean the filter, (see Routine Maintenance), or remove obstruction.
	• The indoor coil or outdoor coil is dirty or obstructed.	• Clean the coils, (see Routine Maintenance), or remove obstruction.
	• There is excessive heat or moisture (cooking, showers, etc.) in the room.	• Be sure to use exhaust vent fans while cooking or bathing and, if possible, try not to use heat producing appliances during the hottest part of the day.
	• The temperature of the room you are trying to cool is extremely hot.	• Allow additional time for the air conditioner to cool off a very hot room.

M.1. Troubleshooting Tips (Cont)

COMPLAINT	CAUSE	SOLUTION
Unit Does Not Cool/ Heat Room Sufficiently, or Cycles On And Off Too Frequently (continued).	• The outside temperature is below 60 °F (16 °C).	• Do not try to operate your air conditioner in the cooling mode when the outside temperature is below 60 °F (16 °C). The unit will not cool properly, and the unit may be damaged.
	• The digital control is set to fan cycling mode.	• Since the fan does not circulate the room air continuously at this setting, the room air does not mix as well and hot (or cold) spots may result. Using the continuous fan setting is recommended to obtain optimum comfort levels.
	• The air conditioner has insufficient cooling capacity to match the heat gain of the room.	• Check the cooling capacity of your unit to ensure it is properly sized for the room in which it is installed. Room air conditioners are not designed to cool multiple rooms.
	• The air conditioner has insufficient heating capacity to match the heat loss of the room.	• Check the heating capacity of your unit. Air conditioners are sized to meet the cooling load, and heater size is then selected to meet the heating load. In extreme northern climates, room air conditioners may not be able to be used as a primary source of heat.
Unit Runs Too Much.	• This may be due to an excessive heat load in the room.	• If there are heat producing appliances in use in the room, or if the room is heavily occupied, the unit will need to run longer to remove the additional heat.
	• It may also be due to an improperly sized unit.	• Be sure to use exhaust vent fans while cooking or bathing and, if possible, try not to use heat producing appliances during the hottest part of the day.
	• This may be normal for higher efficiency (EER) air conditioners.	• The use of higher efficiency components in your new air conditioner may result in the unit running longer than you feel it should. This may be more apparent, if it replaced an older, less efficient, model. The actual energy usage, however, will be significantly less when compared to older models.
	• You may notice that the discharge air temperature of your new air conditioner may not seem as cold as you may be accustomed to from older units. This does not; however, indicate a reduction in the cooling capacity of the unit.	• The energy efficiency ratio (EER) and cooling capacity rating (Btu/ h) listed on the unit's rating plate are both agency certified.

M. TROUBLESHOOTING

M.2 Fault Codes

DIAG CODE	PROBLEM	CONTROL BOARD'S ACTION
1	Front Panel Button Stuck For More Than 20 Seconds	Continue to monitor for "OPEN" (Unstuck) switch. Do not process switch input. ENSURE FRONT COVER DOES NOT DEPRESS BUTTONS
3	Indoor Temperature Sensor is Open or Shorted	Set temp to 75°F in COOLING or 68°F in HEATING. Unit continues to operate
4	Indoor Coil Temperature Sensor is Open or Shorted	Control Board sets temp to a default of 40°F. Override sensor. Unit continues to operate.
5	Outdoor Coil Temperature Sensor is Open or Shorted	Sets temp to 20°F. Override sensor. Continue operation. Use Electric Heat if available for HEATING. If not available use HEAT PUMP if outdoor temp allows.
6	Outdoor Coil greater than 175° F	Turn Compressor off. Wait for the outdoor coil to be less than 150°F for more than 2 consecutive minutes.
7	Indoor Coil less than 30° F for 2 consecutive minutes	Turn compressor and electric heat off. When coil temp reaches 45°F resume operation after lockout time.
8	Unit Cycles greater than 9 Times per hour	Continue operation. Continue to monitor. Take no action. Log Only.

M. TROUBLESHOOTING

M.2 Fault Codes

9	Unit Cycles less than 3 Times per Hour	Continue operation. Continue to monitor. Take no action. Log Only.
12	Discharge Air greater than 185°F	Shutdown electric heater. Wait for the discharge air temperature to be less than 100°F. Resume operation.
13	High Pressure Switch Open	Turn compressor off. Wait until pressure switch is no longer open. Resume operation after lockout time.
14	Discharge Air Temperature Sensor is Open or Shorted	Override Sensor. Set temp to 75°F. Continue to monitor. Set error code 14 ON.
15	Inverter communication lost	No communication with inverter board
16	Temperature Beyond Operating Limits	Ambient temp is less than 0°F or greater than 130°F. Turn off compressor, electric heat, and fan. When cleared resume operation.
17	Inverter fan fault	Fan faults from inverter
18	Inverter immediate fault 1	First group of immediate faults.
19	Inverter immediate fault 2	Second group of immediate faults.
20	Inverter controlled fault 1	First group of controlled faults.
21	Inverter controlled fault 2	Second group of controlled faults
22	Outdoor Coil Temperature less than 30°F for 2 consecutive Minutes	Only applicable to units with heat pump and electric heat. Turn off heat pump operation. Use electric heat to satisfy all heating demands. Cleared when outdoor coil temp is greater than 45°F.

P. Appendixes

P.1 Accessories and Options

DC-2 Drain Kit – Part No. 01900235

In some installations, excess condensate water caused by extremely humid conditions, may result in an undesirable water drip such as on a patio or over an entryway. MODEL DC-2 DRAIN KIT (Part No. 01900-235) can be installed to drain excess condensation to an alternate location.

Window Installation Kits (Standard in Kühl Models without Heat)

KWIKS – For all KES and KHS models.
KWIKM – For all KEM and KHM models.
KWIKL – For all KEL and KHL models.

See **www.friedrich.com** for additional accessories for your unit.

R . INFORMATION FOR THE OWNER

Present the owner or operator of the equipment with the Installation & Operation Manual, all accessory installation instructions, and the name, address, and telephone number of the Authorized Friedrich Warranty Service Company in the area for future reference if necessary. Inspect the unit for any damage to the coils and tubing that could cause a leak.

R.1 Room air conditioner unit performance test data sheet

Job name_____
Tech's name_____

Date_____

Model#_____serial #_____

Check the installation	acceptable Yes	not acceptable no
Is a chassis gasket installed?	_____	_____
Is the fresh / exhaust air vent open?	_____	_____
Is a friedrich sleeve installed?	_____	_____
Is a friedrich outdoor grille installed?	_____	_____
Is maintenance being performed?	_____	_____

Electrical
- Line voltage (static) _____ volts
- Start up voltage _____ volts
- Amperage draw (cool) _____ amps
- Amperage draw (heat) _____ amps

Compressor
- Locked rotor amps _____ amps
- Running amperage draw _____ amps

Indoor conditions
- Indoor ambient temperature _____ f
- Relative humidity (rh) indoor _____%
- Discharge air temperature (indoor)(cool) _____f
- Discharge air temperature (indoor)(heat) _____f
- Return air temperature (indoor)(cool) _____f
- Return air temperature (indoor) (heat) _____f

Outdoor temperature
- Outdoor ambient temperature _____f
- Rh outdoor relative humidity _____%
- Discharge air temperature (outdoor)(cool) _____f
- Discharge air temperature (outdoor)(heat) _____f
- Intake air temperature (outdoor)(cool) _____f
- Intake air temperature (outdoor)(heat) _____f

Cooling or heating area
- Area w_____ * l_____ = feet squared

For a general guide refer to sizing guide to the right

For exact load calculations consult manual j or m.

Air Conditioned Area	Cooling BTUs Required	Air Conditioned Area	Cooling BTUs Required
100 - 150	5000	550 - 700	14000
150 - 250	6000	700 - 1000	18000
250 - 300	7000	1000 - 1200	21000
300 - 350	8000	1200 - 1400	23000
350 - 400	9000	1400 - 1500	24000
400 - 450	10000	1500 - 2000	30000
450 - 550	12000	2000 - 2500	34000

R.2 Routine Maintenance

Decorative Front

Use a damp (not wet) cloth when cleaning the control area to prevent water from entering the unit, and possibly damaging the electronic control.

The decorative front and the cabinet can be cleaned with warm water and a mild liquid detergent. Do NOT use solvents or hydrocarbon based cleaners such as acetone, naphtha, gasoline, benzene, etc.

The indoor coil can be vacuumed with a dusting attachment if it appears to be dirty. DO NOT BEND FINS. The outdoor coil can be gently sprayed with a garden hose.

Air Filter

The air filter should be inspected weekly and cleaned if needed by vacuuming with a dust attachment or by cleaning in the sink using warm water and a mild dishwashing detergent. Dry the filter thoroughly before reinstalling. Use caution, the coil surface can be sharp.

WARNING: Service of this product (aside from filter maintenance) shall only be performed by trained service personnel. Refer to the Service Manual for procedures on how to inspect and maintain the interior of the unit and its components. A QR code is located in section A.5 which will help you locate the service manual online.

Coils & Chassis

The indoor coil and outdoor coils and base pan should be inspected periodically (annually or semi-annually) and cleaned of all debris (lint, dirt, leaves, paper, etc.) as necessary. Under extreme conditions, more frequent cleaning may be required.

Wall Sleeve

Inspect the inside of the wall sleeve and drain system periodically (annually or semi-annually) and clean as required. Under extreme conditions, more frequent cleaning may be necessary.

Blower Wheel / Housing / Condenser Fan / Shroud

Inspect the indoor blower and its housing, evaporator blade, condenser fan blade and condenser shroud periodically (yearly or bi-yearly) and clean of all debris (lint, dirt, mold, fungus, etc.).