Installation and Operation Manual

FRIEDRICH

Chill® Premier Series Room Air Conditioners

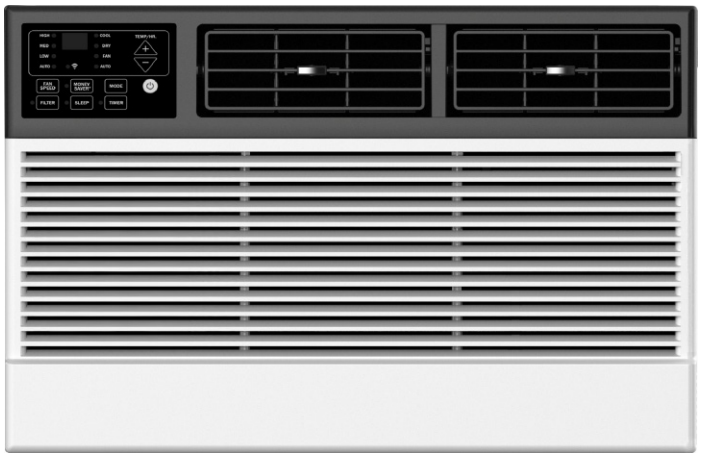

Standard Chassis Models Using R-32 Refrigerant

Chill® Premier® COOL ONLY	115 VOLT	CCF05B10B, CCF06B10B, CCF08B10B CCF10B10B, CCF12B10B, CCF14B10B

THE EXPERTS IN ROOM AIR CONDITIONING

93071100_02

RECOGNIZE THIS SYMBOL AS AN INDICATION OF IMPORTANT SAFETY INFORMATION!

⚠WARNING

THESE INSTRUCTIONS ARE INTENDED AS AN AID TO QUALIFIED SERVICE PERSONNEL FOR PROPER INSTALLATION, ADJUSTMENT AND OPERATION OF THIS UNIT. READ THESE INSTRUCTIONS THOROUGHLY BEFORE ATTEMPTING INSTALLATION OR OPERATION. FAILURE TO FOLLOW THESE INSTRUCTIONS MAY RESULT IN IMPROPER INSTALLATION, ADJUSTMENT, SERVICE OR MAINTENANCE, POSSIBLY RESULTING IN FIRE, ELECTRICAL SHOCK, CARBON MONOXIDE POISONING, EXPLOSION, PROPERTY DAMAGE, PERSONAL INJURY OR DEATH.

⚠WARNING

PROPOSITION 65 WARNING: THIS PRODUCT CONTAINS CHEMICALS KNOWN TO THE STATE OF CALIFORNIA TO CAUSE CANCER, BIRTH DEFECTS OR OTHER REPRODUCTIVE HARM.

BA001-02

DO NOT DESTROY THIS MANUAL. PLEASE READ CAREFULLY AND KEEP IN A SAFE PLACE FOR FUTURE REFERENCE BY A SERVICEMAN.

c UL US LISTED

⚠CAUTION: Do Not Operate Equipment During Active Stages Of Construction

To ensure proper operation, Friedrich requires that all equipment is not operated during active construction phases. This includes active stages of completing framing, drywalling, spackling, sanding, painting, flooring, and molding in the equipment's designated conditioning space. The use of this equipment during construction could result in premature failure of the components and/or system and is in violation of our standard warranty guidelines. The operation of newly installed equipment during construction will accelerate the commencement and/or termination of the warranty period.

Register your Air Conditioner

Model information can be found on the name plate.
Please complete and mail the owner registration card furnished with this product, or register online at www.friedrich.com.

For your future convenience, record the model information .

Model Number _____

Serial Number _____

A. IMPORTANT SAFETY AND GENERAL INFORMATION
- A.1 Introduction 3
- A.2 Safety Warnings 3
- A.3 Warning For Using R32 Refrigerant 5
- A.4 Importance of a Quality Installation 7
- A.5 Product Inspection / Packing List 8

B. SPECIFICATIONS
- B.1 Dimensions 9

C. INSTALLATION OF THE UNIT
- C.1 Pre-Installation Checkpoints 10
- C.2 Tools Required 10
- C.3. Choosing a Location 10
- C.4 Window Installation 11

E. ELECTRICAL
- E.1 Electrical Safety Information 16

J. STARTUP AND OPERATION
- J.1 Control Panel Operation 17
- J.2 Remote Control Operation 19
- J.3 Start-up 20

L. WIFI

M. TROUBLESHOOTING
- M.1. Troubleshooting Tips 21

R . INFORMATION FOR THE OWNER
- R.1 Routine Maintenance 23

A. IMPORTANT SAFETY AND GENERAL INFORMATION

A.1 Introduction

This booklet contains the installation and operating instructions for your Air Conditioning unit. There are some precautions that should be taken to ensure proper operation. Improper installation can result in unsatisfactory operation or dangerous conditions.

Read this booklet and any instructions packaged with separate equipment required to make up the system prior to installation. Give this booklet to the owner and explain its provisions. The owner should retain this booklet for future reference.

A.2 Safety Warnings

⚠WARNING: The manufacturer's warranty does not cover any damage or defect to the air conditioner caused by the attachment or use of any components, accessories or devices (other than those authorized by the manufacturer) into, onto or in conjunction with the air conditioner. You should be aware that the use of unauthorized components, accessories or devices may adversely affect the operation of the air conditioner and may also endanger life and property. The manufacturer disclaims any responsibility for such loss or injury resulting from the use of such unauthorized components, accessories or devices.

⚠WARNING: Electrical Shock Hazard

Disconnect all power to the unit before starting maintenance. All electrical connections and wiring MUST be installed by a qualified electrician and conform to the National Code and all local codes which have jurisdiction. Failure to do so can result in property damage, severe electrical shock or death.

⚠WARNING: Read Installation Manual

Please read this manual thoroughly prior to equipment installation or operation. It is the installer's responsibility to properly apply and install the equipment. Installation must be in conformance with the NFPA 70-2023 national electric code or current edition, International Mechanic code 2021 or current edition, and any other local or national codes.

⚠WARNING: Safety First

Do not remove, disable, or bypass this unit's safety devices. Doing so may cause fire, injuries, or death.

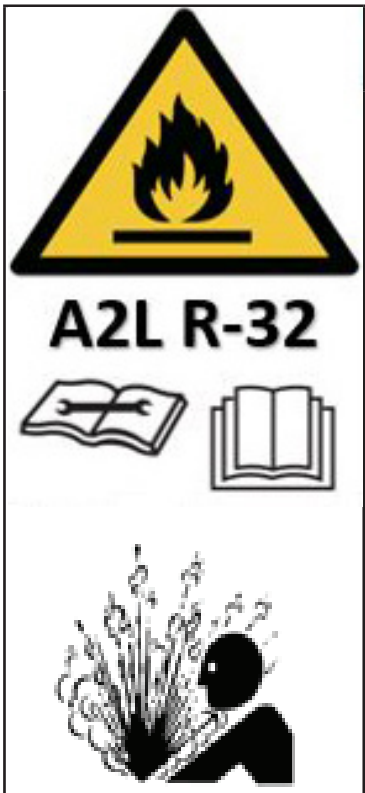

⚠ WARNING	⚠ ADVERTENCIA	⚠ ATTENTION
• RISK OF FIRE OR EXPLOSION • FLAMMABLE REFRIGERANT USED • REPAIRS MAY ONLY BE PERFORMED BY TRAINED PERSONNEL • CONSULT SERVICE MANUAL BEFORE ATTEMPTING REPAIRS. ALL SAFETY PRECAUTIONS MUST BE FOLLOWED • DO NOT PUNCTURE TUBING • DISPOSE OF UNIT PROPERLY IN ACCORDANCE WITH FEDERAL OR LOCAL REGULATIONS • ONLY USE A2L APPROVED SERVICE EQUIPMENT	• RIESGO DE FUEGO • REFIGERANTE INFLAMABLE UTILZADO • PARA SER REPARDO UNICAMENTE POR PERSONAL DE SERVICIO CAPACITADO • CONSULTE EL MANUAL DE REPARACION DEL PROPIETARIO ANTES DE INTENTAR REPARAR ESTE PRODUCTO. SE DEBEN SEGUIR TODAS LAS PRECAUCIONES DE SEGURIDAD • NO PERFORE LA TUBERIA DE REFRIGERANTE • DESECHE APROPIADAMENTE DE ACUERDO CON LAS REGULACIONES FEDERALES O LOCALES	• RISQUE D'INCENDIE • REFRIGERANT INFLAMMABLE UTILISE • A REPARER UNIQUEMENT PAR DU PERSONNELDE SERVICE QUALIFIE • CONSULTAR LE MANUEL DE REPARATION/GUIDE DU PROPRIETARE AVANTE DE TENTER DE REPARER CE PRODUIT. TOUTES LES PRECAUTIONS DE SECURITE DOIVENT ETRE SUIVIES • NE PAS PERFORER LE TUYAU DE REFRIGERANT • ELIMINER CORRECTEMENT CONFORMENT AUX REGLEMENTS FEDERAUX OU LOCAUX

A. IMPORTANT SAFETY AND GENERAL INFORMATION

Read All Instructions and Cautionary Markings Before Operation and Installation to prevent death or injury to the user, other people, or property damage, the following instructions must be followed. Incorrect operation due to ignoring of instructions may cause death, harm or damage.

⚠ WARNING: This symbol indicates the possibility of a hazard to personnel.

⚠ CAUTION: This symbol indicates the possibility of property damage or serious consequences.

⚠ WARNING:

1. Installation must be performed according to the installation instructions. Improper installation can cause water leakage, electrical shock, or fire.
2. Use only the included accessories and parts, and specified tools for the installation. Using nonstandard parts can cause water leakage, electrical shock, fire, and injury or property damage.
3. Make sure that the outlet you are using is grounded and has the appropriate voltage. The power cord is equipped with a three-prong grounding plug to protect against shock. Voltage information can be found on the nameplate of the appliance.
4. Your appliance must be used in a properly grounded wall receptacle. If the wall receptacle you intend to use is not adequately grounded or protected by a time delay fuse or circuit breaker (the fuse or circuit breaker needed is determined by the maximum current of the appliance. The maximum current is indicated on the model nameplate located on the appliance, have a qualified electrician install the proper receptacle.
5. Install the appliance on a flat, sturdy surface. Failure to do so could result in damage or excessive noise and vibration.
6. The appliance must be kept free from obstruction to ensure proper function and to mitigate safety hazards.
7. The unit should not be in contact with any equipment that will transmit vibration to the unit. Any excessive vibration or pulsation to the unit could result in damage to the refrigerant tubing.
8. Do not modify the length of the power cord or use an extension cord to power the appliance.
9. Do not share a single outlet with other electrical appliances. Improper power supply can cause fire or electrical shock.
10. Do not install your air conditioner in a wet room such as a bathroom or laundry room. Too much exposure to water can cause electrical components to short circuit.
11. Do not install the appliance in a location that may be exposed to combustible gas, as this could cause fire.
12. Do not operate the appliance if it has been dropped or damaged.
13. Do not touch the appliance with wet or damp hands or when barefoot.
14. If the air conditioner is knocked over during use, turn off the appliance and unplug it from the main power supply immediately. Visually inspect the appliance to ensure there is no damage. If you suspect the appliance has been damaged, contact a technician or customer service for assistance.
15. In a thunderstorm, the power must be cut off to avoid damage to the machine due to lightning. Your air conditioner should be used in such a way that it is protected from moisture. e.g. condensation, splashed water, etc. Do not place or store your air conditioner where it can fall or be pulled into water or any other liquid. Unplug immediately if it occurs.
16. All wiring must be performed strictly in accordance with the wiring diagram located inside of the appliance.
17. The appliance's circuit board(PCB) is designed with a fuse to provide overcurrent protection. The specifications of the fuse are printed on the circuit board, such as: T 3.15A/250V, etc.
18. After proper installation, condensate will not overflow during normal use. If the fan hits the built-up water and the sound annoys you, please remove the cap located at the back of the air conditioner to drain the water away.

⚠ CAUTION:

1. This appliance is not intended for use by persons (including children) with reduced physical, sensory or mental capabilities or lack of experience and knowledge, unless they have been given supervision or instruction concerning use of the appliance by a person responsible for their safety. Children should be supervised to ensure that they do not play with the appliance. Children must be supervised around the appliance at all times.
2. If the supply cord is damaged, it must be replaced by the manufacturer, its service agent or similarly qualified persons in order to avoid a hazard.
3. Prior to cleaning or other maintenance, the appliance must be disconnected from the supply mains.
4. Never use this appliance if it is not working properly, or if it has been dropped or damaged.
5. Do not run cord under carpeting. Do not cover cord with throw rugs, runners, or similar coverings. Do not route cord under furniture or appliances. Arrange cord away from traffic area and where it will not be tripped over.
6. Do not operate with a damaged cord, plug, power fuse or circuit breaker. Discard the appliance or return to an authorized service facility for examination and/or repair.
7. To reduce the risk of fire or electric shock, do not use this fan with any solid-state speed control device.
8. The appliance shall be installed in accordance with national wiring regulations.
9. Contact the authorized service technician for repair or maintenance of this appliance.
10. Contact the authorized installer for installation of this appliance.
11. Do not cover or obstruct the inlet or outlet grilles.
12. Do not use this product for functions other than those described in this instruction manual.
13. Before cleaning, turn off the power and unplug the appliance.
14 .Disconnect the power if strange sounds, smell, or smoke comes from it.
15. Do not press the buttons on the control panel with anything other than your fingers.
16. Do not operate or stop the appliance by inserting or pulling out the power cord plug.
17. Do not use hazardous chemicals to clean or come into contact with the appliance.
18. Do not use the appliance in the presence of flammable substances or vapor such as alcohol, insecticides, petrol,etc.
19. Always contact a qualified person to carry out repairs. If the power supply cord is damaged, it must be replaced with a new power supply cord obtained from the product manufacturer and not repaired.
20. Hold the plug by the head of the power plug when taking it out.
21. Turn off the product when not in use.

A.3 Warning For Using R32 Refrigerant

For R32 refrigerant models:
1. Appliance shall be installed, operated and stored in a room with a floor area larger than 43 sq ft.
2. Appliance shall not be installed in an unventilated space, if that space is smaller than 43 sq ft.
3. Compliance with national gas regulations shall be observed.
4. Keep ventilation openings clear of obstruction.
5. The appliance shall be stored so as to prevent mechanical damage from occurring.
6. A warning that the appliance shall be stored in a well-ventilated area where the room size corresponds to the room area as specified for operation.
7. Any person who is involved with working on or opening a refrigerant system must be certified for refrigerant handling as required by local, state, and federal regulations.
8. Servicing shall only be performed as recommended by the equipment manufacturer. Maintenance and repair requiring the assistance of other skilled personnel shall be carried out under the supervision of the person competent in the use of flammable refrigerants.
9. Please follow the instruction carefully to handle, install, clear, and service the air conditioner to avoid any damage or hazard. Flammable Refrigerant R32 is used within air conditioner. When maintaining or disposing the air conditioner, the refrigerant (R32) shall be recovered properly, and shall not be discharged to air directly.
10. No any open fire or device like a switch which may generate spark/arcing shall be around the air conditioner to avoid causing ignition of the flammable refrigerant used.
11. Please follow the instruction carefully to store or maintain the air conditioner to prevent mechanical damage from occurring.
12. Flammable refrigerant R32 is used in air conditioner. Please follow the instruction carefully to avoid any hazard.
13. For specific information on the type of gas and the amount of refrigerant used, refer to the model nameplate on the unit.

⚠ **CAUTION:** Risk of fire/flammable materials
(Required for R32 units only)

⚠ **WARNING:** low burning velocity material
(For R32 models apply to IEC60335-2-40:2018)

Note about Fluorinated Gases

1. Fluorinated greenhouse gases are contained in hermetically sealed equipment. For specific information on the type, the amount and the Co2 equivalent in tonnes of the fluorinated greenhouse gas(on some models), please refer to the relevant label on the unit itself.
2. Installation, service, maintenance and repair of this unit must be performed by a certified technician.
3. Product de-installation and recycling must be performed by a certified technician.

For Household Use Only Read And Save These Instructions

1. Transport of equipment containing flammable refrigerants:
See transport regulations.
2. Marking of equipment using signs:
See local regulations.
3. Disposal of equipment using flammable refrigerants:
See national regulations.
4. Storage of equipment/appliances:
The storage of equipment should be in accordance with the manufacturer's instructions.
5. Storage of packed (unsold) equipment:
Storage package protection should be constructed such that mechanical damage to the equipment inside the package will not cause a leak of the refrigerant charge. The maximum number of pieces of equipment permitted to be stored together will be determined by local regulations.
6. Information on servicing:
1) Checks to the area:
Prior to beginning work on systems containing flammable refrigerants, safety checks are necessary to ensure that the risk of ignition is minimized. For repair to the refrigerating system, the following precautions shall be complied with prior to conducting work on the system.
2) Work procedure:
Work shall be undertaken under a controlled procedure so as to minimize the risk of a flammable gas or vapour being present while the work is being performed.
3) General work area:
All maintenance staff and others working in the local area shall be instructed on the nature of work being carried out. Work in confined spaces shall be avoided. The area around the workspace shall be sectioned off. Ensure that the conditions within the area have been made safe by control of flammable material.
4) Checking for presence of refrigerant:
The area shall be checked with an appropriate refrigerant detector prior to and during work, to ensure the technician is aware of potentially flammable atmospheres. Ensure that the leak detection equipment being used is suitable for use with flammable refrigerants, i.e. non-sparking, adequately sealed or intrinsically safe.
5) Presence of fire extinguisher:
If any hot work is to be conducted on the refrigeration equipment or any associated parts, appropriate fire extinguishing equipment shall be available to hand. Have a dry powder or CO2 fire extinguisher adjacent to the charging area.
6) No ignition sources:
No person carrying out work in relation to a refrigeration system which involves exposing any pipe work that contains or has contained flammable refrigerant shall use any sources of ignition in such a manner that it may lead to the risk of fire or explosion. All possible ignition sources, including cigarette smoking, should be kept sufficiently far away from the site of installation, repairing, removing and disposal, during which flammable refrigerant can possibly be released to the surrounding space. Prior to work taking place, the area around the equipment is to be surveyed to make sure that there are no flammable hazards or ignition risks. No Smoking signs shall be displayed.
7) Ventilated area:
Ensure that the area is in the open or that it is adequately ventilated before breaking into the system or conducting any hot work. A degree of ventilation shall continue during the period that the work is carried out. The ventilation should safely disperse any released refrigerant and preferably expel it externally into the atmosphere.
8) Checks to the refrigeration equipment:
Where electrical components are being changed, they shall be fit for the purpose and to the correct specification. At all times the manufacturer's maintenance and service guidelines shall be followed. If in doubt consult the manufacturer's technical department for assistance. The following checks shall be applied to installations using flammable refrigerants:
a. The charge size is in accordance with the room size within which the refrigerant containing
parts are installed;
b. The ventilation machinery and outlets are operating adequately and are not obstructed;
c. If an indirect refrigerating circuit is being used, the secondary circuit shall be checked for the presence of refrigerant; Marking to the equipment continues to be visible and legible. Markings and signs that are illegible shall be corrected;
d. Refrigeration pipe or components are installed in a position where they are unlikely to be exposed to any substance which may corrode refrigerant containing components, unless the components are constructed of materials which are inherently resistant to being

corroded or are suitably protected against being so corroded.
9) Checks to electrical devices:
Repair and maintenance to electrical components shall include initial safety checks and component inspection procedures. If a fault exists that could compromise safety, then no electrical supply shall be connected to the circuit until it is satisfactorily dealt with. If the fault cannot be corrected immediately but it is necessary to continue operation, an adequate temporary solution shall be used. This shall be reported to the owner of the equipment so all parties are advised. Initial safety checks shall include:
a. That capacitors are discharged: this shall be done in a safe manner to avoid possibility of sparking;
b. That there no live electrical components and wiring are exposed while charging, recovering or purging the system;
c. That there is continuity of earth bonding.
7. Repair to intrinsically safe components:
Do not apply any permanent inductive or capacitance loads to the circuit without ensuring that this will not exceed the permissible voltage and current permitted for the equipment in use. Intrinsically safe components are the only types that can be worked on while live in the presence of a flammable atmosphere. The test apparatus shall be at the correct rating.
Replace components only with parts specified by the manufacturer. Other parts may result in the ignition of refrigerant in the atmosphere from a leak.
8. Cabling:
Check that cabling will not be subject to wear, corrosion, excessive pressure, vibration, sharp edges or any other adverse environmental effects. The check shall also take into account the effects of aging or continual vibration from sources such as compressors or fans.
9. Detection of flammable refrigerants
Under no circumstances shall potential sources of ignition be used in the searching for or detection of refrigerant leaks. A halide torch (or any other detector using a naked flame) shall not be used.
10. Leak detection methods:
The following leak detection methods are deemed acceptable for systems containing flammable refrigerants. Electronic leak detectors shall be used to detect flammable refrigerants, but the sensitivity may not be adequate, or may need re-calibration. (Detection equipment shall be calibrated in a refrigerant-free area.) Ensure that the detector is not a potential source of ignition and is suitable for the refrigerant used. Leak detection equipment shall be set at a percentage of the LFL of the refrigerant and shall be calibrated to the refrigerant employed and the appropriate percentage of gas (25 % maximum) is confirmed. Leak detection fluids are suitable for use with most refrigerants but the use of detergents containing chlorine shall be avoided as the chlorine may react with the refrigerant and corrode the copper pipe-work. If a leak is suspected, all naked flames shall be removed/extinguished. If a leakage of refrigerant is found which requires brazing, all of the refrigerant shall be recovered from the system, or isolated (by means of shut off valves) in a part of the system remote from the leak. Oxygen free nitrogen (OFN) shall then be purged through the system both before and during the brazing process.
11. Removal and evacuation
When breaking into the refrigerant circuit to make repairs or for any other purpose conventional procedures shall be used. However, it is important that best practice is followed since flammability is a consideration. The following procedure shall be adhered to: Remove refrigerant; Purge the circuit with inert gas; Evacuate; Purge again with inert gas; Open the circuit by cutting or brazing. The refrigerant charge shall be recovered into the correct recovery cylinders.
The system shall be flushed with OFN to render the unit safe. This process may need to be repeated several times. Compressed air or oxygen shall not be used for this task. Flushing shall be achieved by breaking the vacuum in the system with OFN and continuing to fill until the working pressure is achieved, then venting to atmosphere, and finally pulling down to a vacuum. This process shall be repeated until no refrigerant is within the system. When the final OFN charge is used, the system shall be vented down to atmospheric pressure to enable work to take place. This operation is absolutely vital if brazing operations on the pipe-work are to take place. Ensure that the outlet for the vacuum pump is not close to any ignition sources and there is ventilation available.
12. Charging procedures:
In addition to conventional charging procedures, the following requirements shall be followed. Ensure that contamination of different refrigerants does not occur when using charging equipment. Hoses or lines shall be as short as possible to minimize the amount of refrigerant contained in them. Cylinders shall be kept upright. Ensure that the refrigeration system is earthed prior to charging the system with refrigerant. Label the system when charging is complete (if not already). Extreme care shall be taken not to overfill the refrigeration system. Prior to recharging the system it shall be pressure tested with OFN. The system shall be leak tested on completion of charging but prior to commissioning. A follow up leak test shall be carried out prior to leaving the site.
13. Decommissioning:
Before carrying out this procedure, it is essential that the technician is completely familiar with the equipment and all its detail. It is recommended good practice that all refrigerants are recovered safely. Prior to the task being carried out, an oil and refrigerant sample shall be taken in case analysis is required prior to re-use of reclaimed refrigerant. It is essential that electrical power is available before the task is commenced.
a. Become familiar with the equipment and its operation.
b. Isolate system electrically.
c. Before attempting the procedure ensure that: Mechanical handling equipment is available, if required, for handling refrigerant cylinders; All personal protective equipment is available and being used correctly; The recovery process is supervised at all times by a competent person; Recovery equipment and cylinders conform to the appropriate standards.
d. Pump down refrigerant system, if possible.
e. If a vacuum is not possible, make a manifold so that refrigerant can be removed from various parts of the system.
f. Make sure that cylinder is situated on the scales before recovery takes place.
g. Start the recovery machine and operate in accordance with manufacturer's instructions.
h. Do not overfill cylinders. (No more than 80 % volume liquid charge).
i. Do not exceed the maximum working pressure of the cylinder, even temporarily.
j. When the cylinders have been filled correctly and the process completed, make sure that the cylinders and the equipment are removed from site promptly and all isolation valves on the equipment are closed off.
k. Recovered refrigerant shall not be charged into another refrigeration system unless it has been cleaned and checked.
14. Labeling:
Equipment shall be labeled stating that it has been de-commissioned and emptied of refrigerant. The label shall be dated and signed. Ensure that there are labels on the equipment stating the equipment contains flammable refrigerant.
15. Recovery:
When removing refrigerant from a system, either for servicing or decommissioning, it is recommended good practice that all refrigerants are removed safely. When transferring refrigerant into cylinders, ensure that only appropriate refrigerant recovery cylinders are employed. Ensure that the correct number of cylinders for holding

the total system charge is available. All cylinders to be used are designated for the recovered refrigerant and labeled for that refrigerant (i.e. special cylinders for the recovery of refrigerant).
Cylinders shall be complete with pressure relief valve and associated shut-off valves in good working order. Empty recovery cylinders are evacuated and, if possible, cooled before recovery occurs. The recovery equipment shall be in good working order with a set of instructions concerning the equipment that is at hand and shall be suitable for the recovery of flammable refrigerants. In addition, a set of calibrated weighing scales shall be available and in good working order. Hoses shall be complete with leak-free disconnect couplings and in good condition. Before using the recovery machine, check that it is in satisfactory working order, has been properly maintained and that any associated electrical components are sealed to prevent ignition in the event of a refrigerant release. Consult manufacturer if in doubt. The recovered refrigerant shall be returned to the refrigerant supplier in the correct recovery cylinder, and the relevant Waste Transfer Note arranged. Do not mix refrigerants in recovery units and especially not in cylinders. If compressors or compressor oils are to be removed, ensure that they have been evacuated to an acceptable level to make certain that flammable refrigerant does not remain within the lubricant. The evacuation process shall be carried out prior to returning the compressor to the suppliers. Only electric heating to the compressor body shall be employed to accelerate this process. When oil is drained from a system, it shall be carried out safely.
NOTE: Check the appliance regularly and refer to TROUBLESHOOTING or contact our customer support if it shows any of the following signs:
- Power cord or plug is damaged.
- Loud noise, unusual smell or excessive heat.

A.4 Importance of a Quality Installation

Optimal system performance and longevity depend upon a quality and proper installation. Failure to properly install this unit could result in undesirable operation and subsequent faults and potential failures.

Carefully follow all guidelines listed in the manual and industry best practices. Conform to all local code requirements. Contact your local technical representative with any questions or concerns.

Upon receiving the unit, inspect it for any damage from shipment. Claims for damage, either shipping or concealed, should be filed immediately with the shipping company. IMPORTANT: Check the unit model number, Cooling size, electrical characteristics, and accessories to determine if they are correct.

⚠ WARNING: Check the unit power cord and make sure the cord is protected from wear, corrosion, excessive pressure, vibration, sharp edges, or any other adverse environmental effects. It is recommended that the cord is checked for any potential damage when filter maintenance is performed. If the supply cord is damaged, it must be replaced by the manufacturer, its service agent or similarly qualified persons in order to avoid a hazard.

⚠ WARNING: If the unit appears damaged,or if a refigerant leak is suspected, do not install.

Contact a licenced repair person to perform a leak check on the unit.

⚠ WARNING: Under no circumstances shall potential sources of ignition be used in the searching for or detection of refrigerant leaks. A halide torch (or any other detector using a naked flame) shall not be used. The following leak detection methods are deemed acceptable for all refrigerant systems. Electronic leak detectors may be used to detect refrigerant leaks but, in the case of FLAMMABLE REFRIGERANTS, the sensitivity may not be adequate, or may need re-calibration. (Detection equipment shall be calibrated in a refrigerant-free area.) Ensure that the detector is not a potential source of ignition and is suitable for the refrigerant used. Leak detection equipment shall be set at a percentage of the LFL.

⚠ WARNING: Service of this product (aside from filter maintenance) shall only be performed by trained service personnel. This includes:

Opening of any ventilated Any tubing or refrigerant circuit work

Opening of any sealed components

Enclosures beyond the hinged door for filter cleaning

Scan this QR code to be linked to the Friedrich professional support page where you can locate the Service Manual.

A.5 Product Inspection / Packing List

Upon receiving the unit, inspect it for any damage from shipment. Claims for damage, either shipping or concealed, should be filed immediately with the shipping company. IMPORTANT: Check the unit model number, Cooling size, electrical characteristics, and accessories to determine if they are correct.

IMAGE	PART	QUANTITY
	Window Air Conditioner	1
	Remote Control	1
	Top Mounting Rail (With sponge)	1
	Lock Frame	2
	Filler Panels (With "Left" & "Right" remark on the front face)	2
	Sash Lock(Two holes)	1
	Window Sash Seal (Sponge)	1
	3/8” Screws	4
	1/2” Screws	3
	3/4” Screws	4
	Foam Top Window Gasket (Thin sponge for backup using)	1
	Insulation strip(Sponge) (Only for E-star model)	2
	Battery	2

Figure A.4 (Packing List)

B. SPECIFICATIONS
B.1 Dimensions

Window type:

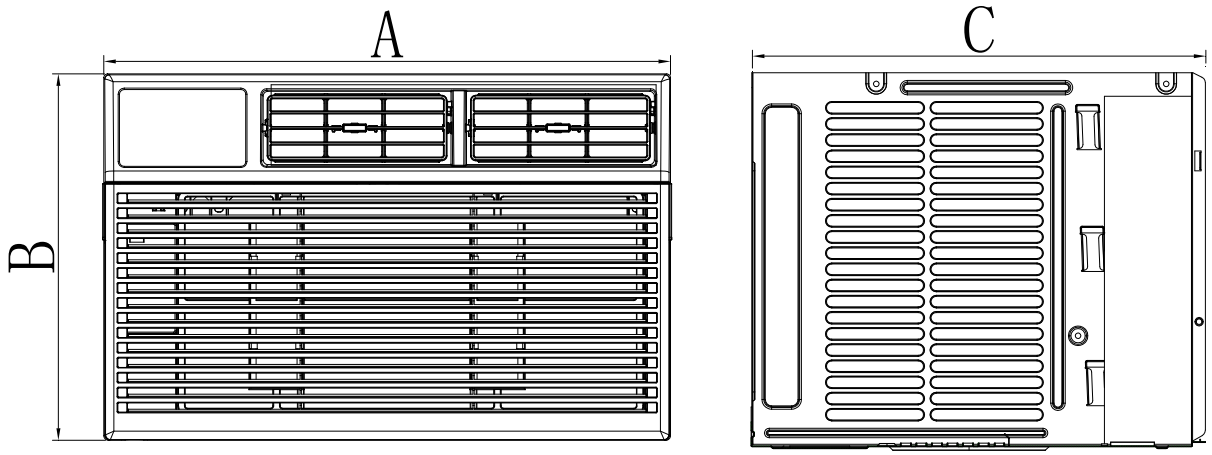

Model	A (Width)	B (Height)	C (Depth)	MINIMUM WINDOW WIDTH	MAXIMUM WINDOW WIDTH
CCF05B10B, CCF06B10B, CCF08B10B	18 5/8	13 3/8	15 5/8	23	36
CCF10B10B	18 5/8	13 3/8	17 3/8	23	36
CCF12B10B, CCF14B10B	19 3/4	15 1/8	21 1/2	26	36

Figure B.1
Dimensions In Inches

C. INSTALLATION OF THE UNIT

C.1 Pre-Installation Checkpoints

Before attempting any installation, carefully consider the following points:

- Clearances and provision for servicing. Install this unit in accordance with local and national standards. Any and all work must be done by authorized personnel.
- IMPORTANT: Before you begin the actual installation of your air conditioner, check your local electrical codes and the information below. Your air conditioner must be connected to a power source with the same alternating current (A.C.) voltage and amperage as marked on the name plate located on the chassis. Only A.C. can be used. Direct Current (D.C.) cannot be used.
- CIRCUIT PROTECTION – Use on single outlet circuit only. An overloaded circuit will invariably cause malfunction or failure of an air conditioner; therefore, it is necessary that the electrical protection is adequate. Due to momentary high current demand when the air conditioner starts, use a "TIME DELAY" fuse or a HACR type circuit breaker. Consult your dealer or power company if in doubt.
- Refer to the electrical name plate located on the air conditioner chassis (see Table E.1 to determine the correct fuse or circuit breaker amperage for your model.
- The power cord has a plug with a grounding prong and a matching receptacle is required.

C.2 Tools Required

⚠ WARNING

Electrical Shock Hazard

Make sure your electrical receptacle has the same configuration as your air conditioner's plug. If different, consult a Licensed Electrician.

Do not use plug adapters.
Do not use an extension cord.
Do not remove ground prong.

Always plug into a grounded 3 prong outlet. Failure to follow these instructions can result in death, fire, or electrical shock.

1. Power Drill
2. 1/8 Drill Bit
3. Gloves
4. Carpenters Level
5. #2 Phillips Screw Driver
6. Putty Knife or (wood stir stick)

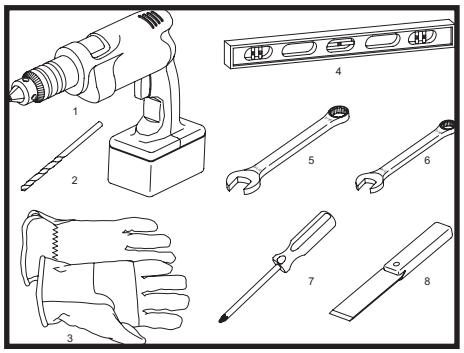

C.3. Choosing a Location Installation Clearances

Improper installation of the Air Conditioner can cause poor performance and premature wear of the unit.
Ensure that the unit is installed with proper clearances as described below.
Ensure no obstructions or enclosures are within clearances limits to allow for proper airflow.
Ensure no open flames, or surfaces that will exceed 1000 degrees fahrenheit are within clearances limits.

⚠ WARNING

Refigeration System Under High Pressure

Do not puncture, heat, expose to flame or incinerate.
Only certified refrigeration technicians should service this equipment.
R410A and R32 systems operate at higher pressures than R22 equipment.
Appropriate safe service and handling practices must be used.
Only use gauge sets designed for use with R410A or R32.
Do not use standard R22 gauge sets..

Clearances

Top and Bottom of Unit - One (1) foot
Sides of Unit - One (1) foot
Front of Unit - Three (3) feet
Rear of Unit - Three (3) feet

⚠ WARNING

Fire Hazard

A2L refrigerant is classified as mildly flammable. Do not install unit next open flame sources, or surfaces that will exceed 1200 degrees fahrenheit.

C. INSTALLATION OF THE UNIT

C.4 Window Installation

⚠ CAUTION

Moving Parts Hazard

Do not operate unit out of sleeve or with front grille removed. Do not place hands in blower or fan blade areas. Failure to do so can result in serious injury

⚠ CAUTION

Excessive Weight Hazard

Use two or more people when installing your air conditioner. Failure to do so can result in back or other injury.

C.4.1 General Information 5-10k Btu Units

Some assembly is required for your new air conditioner. Please read and follow these instructions carefully.

1. This air conditioner is designed to be installed in a standard double-hung window with a window width between 23” and 36”. .
2. The air conditioner can be installed without the accordion panels to fit in a narrow window opening. See the window dimensions.
3. The Lower Sash (the lower part of the window that moves up and down) must allow for 14.5” of vertical clearance when open. (See FIG. 1).
4. All supporting parts must be secured to firm wood, masonry, or metal.
5. The electrical outlet must be within reach of the power cord.

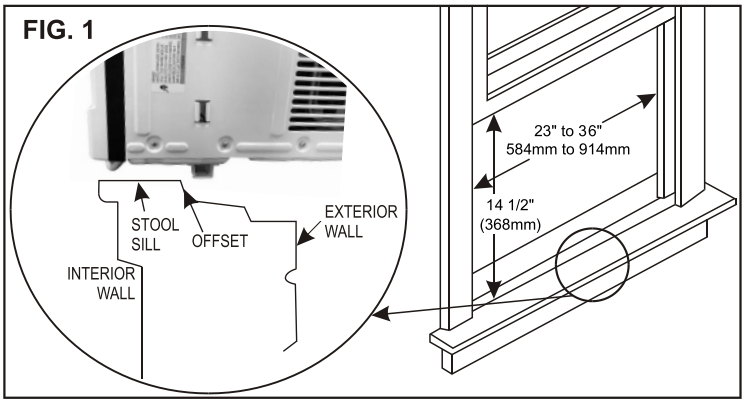

NOTE: Save the product packaging and installation instructions for future reference. Store the air conditioner in the product box when not in use for an extended period of time.

C.4.2 General Information 12-14k Btu Units

Some assembly is required for your new air conditioner. Please read and follow these instructions carefully.

1. This air conditioner is designed to be installed in a standard double-hung window with a window width between 26” and 36”.
2. The air conditioner can be installed without the accordion panels to fit in a narrow window opening. See the window dimensions.
3. The Lower Sash (the lower part of the window that moves up and down) must allow for 16” of vertical clearance when open. (See FIG. 2).
4. All supporting parts must be secured to firm wood, masonry, or metal.
5. The electrical outlet must be within reach of the power cord.

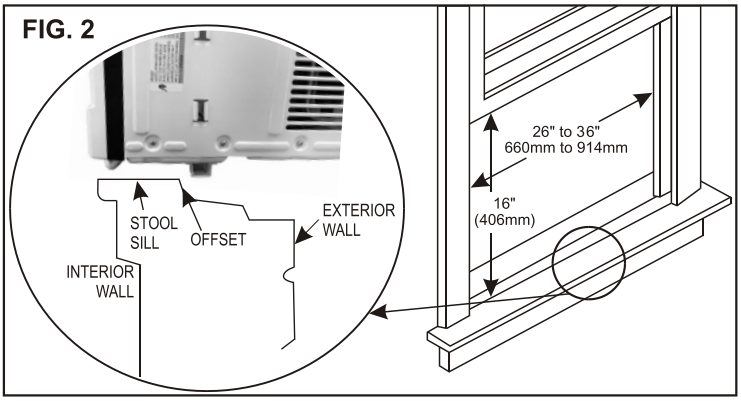

NOTE: Save the product packaging and installation instructions for future reference. Store the air conditioner in the product box when not in use for an extended period of time.

Window Installation(Cont)
C.4.3 Top Rail Assembly 8k BTU Units Only

Top Rail Assembly (Only used for 8K)

The top rail must be assembled prior to installing the air conditioner in the window.
Tools Needed: Phillips Screw Driver

Top Rail Hardware		QTY
	3/8” Screw	4
	Top Rail	1

Attaching the Top Rail to the Air Conditioner

1. Remove the air conditioner from the box and place on a hard flat surface.
2. Remove top rail from the bottom of the packaging material as shown in FIG. A.
3. Align the hole in the top rail with those in the top of the unit as shown in FIG. B.
4. Secure the top rail to the unit with the 3/8" screws as shown in FIG. C.

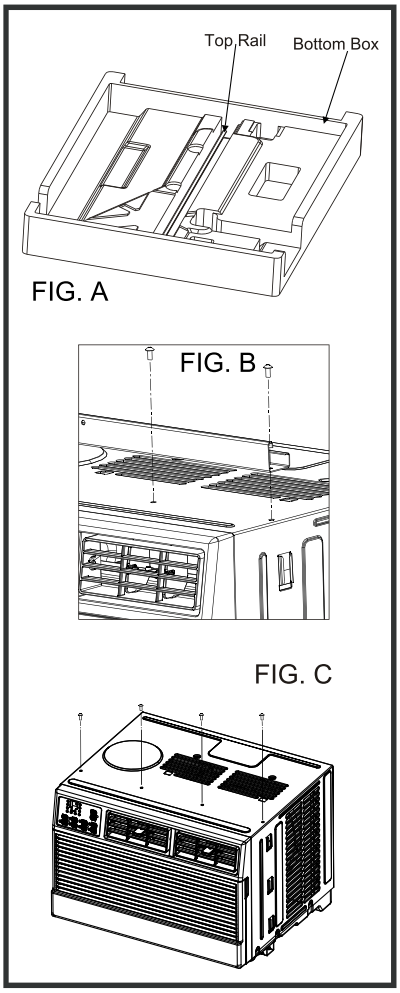

NOTE: For safety reasons, all 4 screws must be used to attach the top rail.

CAUTION

When handling the unit, be careful to avoid cuts from the sharp metal edges and aluminum fins on the front and rear coils.
Besure that, there will be a 3 tilt angle downward to the unit back side, after finish the unit installation.

C. INSTALLATION OF THE UNIT
Window Installation(Cont)

MOUNTING HARDWARE		Qty
	3/4” Screws	4
	1/2” Screws	3
	Lock Frame	2
	Sash Lock	1

TOOLS NEEDED:

- Phillips Screw Driver
- Drill (If pilot holes are needed)

CAUTION

When handling unit, be careful to avoid cuts from sharp metal edges and aluminum fins on front and rear coils.
Besure that, there will be a 3 tilt angle downward to the unit back side, after finish the unit installation.

How to Install

Top Rail and Sliding Panels at each side are offset to provide the proper pitch of 5/16" to the rear of the air conditioner.

1 Place unit on floor, a bench or a table. There is a Left and Right Window Filler Panel - be sure to use the proper panel for each side.When installed the flange for securing the panel in place to the window sill will be facing into the room.

A. Hold the Accordion Panel in one hand and gently pull back the center to free the open end. See Figure 3.

FIG. 3

B. Slide the free end of the panel into the cabinet as shown in Figures 4. Slide the panel down. Be sure to leave enough space to slip the top and bottom of the frame into the rails on the cabinet.

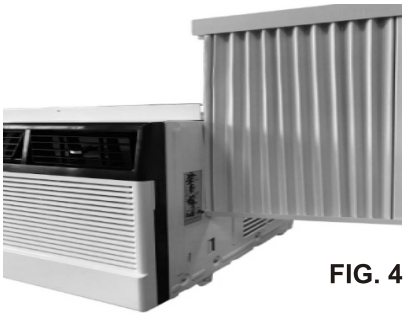
FIG. 4

C. Once the panel has been installed on the side of the cabinet, make sure it sits securely inside the frame channel by making slight adjustments. Slide the top and bottom ends of the frame into the top and bottom rails of the cabinet. Figure 5.

FIG. 5

D. Slide the panel all the way in and repeat on the other side.

Window Installation(Cont)

2 Keeping a firm grip on the air conditioner, carefully place the unit into the window opening so the bottom of the air conditioner frame is against the window sill (FIG. 6). Carefully close the window behind the top rail of the unit. (It is suggested to keep a downward angle so accumulated rain water can drain out from the backside of the unit.)

FIG. 6

3 Extend the side panels out against the window frame (FIG. 7).

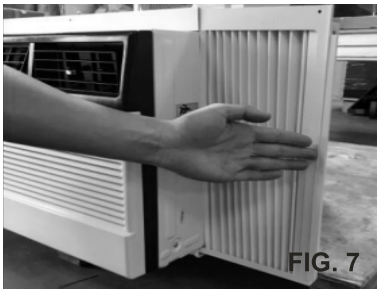
FIG. 7

4 Place the frame lock between the frame extensions and the window sill as shown (Fig. 8). Drive 3/4" locking screws through the frame lock and into the sill (FIG. 9). **NOTE:** To prevent window sill from splitting, drill 1/8" pilot holes before driving screws.

FIG. 8

FIG. 9

5 Drive 1/2" locking screws through frame holes into window sash (FIG. 10/11).

FIG. 10

FIG. 11

6 To secure lower sash in place, attach right angle sash lock with 3/4" screw as shown (FIG. 12).

FIG. 12

7 Cut foam seal and insert in the space between the upper and lower sashes (FIG. 13).

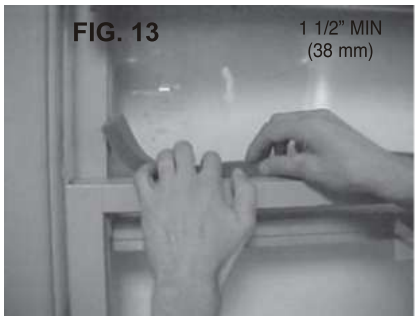

FIG. 13

If AC is Blocked by Storm Window

Add wood as shown in FIG. 14, or remove storm window before air conditioner is installed.

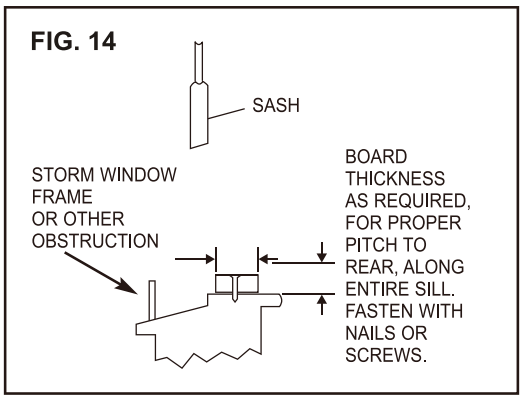

If storm window frame must remain, be sure the drain holes or slots are not caulked or painted shut. Accumulated rain water or condensation must be allowed to drain out.

Removing AC From Window

* Turn AC off, and disconnect power cord.
* Remove sash seal from between windows and unscrew safety lock.
* Remove screws installed through frame and frame lock.
* Close (slide) side panels into frame.
* Keeping a firm grip on air conditioner, raise sash and carefully "rock" air conditioner backward to drain any condensate water in base of unit. Be careful not to spill any remaining water while lifting unit from window. Store parts WITH air conditioner.

AIR CONDITIONER USE

Operating your air conditioner properly helps you to obtain the best possible results.

This section explains proper air conditioner operation.

IMPORTANT:

- If you turn off the air conditioner, wait at least 3 minutes before turning it back on. This prevents the air conditioner from blowing a fuse or tripping a circuit breaker.
- Do not try to operate your air conditioner in the cooling mode when outside temperature is below 65°F (18°C). The inside evaporator coil will freeze up, and the air conditioner will not operate properly.

NOTE: In the event of a power failure, your air conditioner will operate at the previous settings when the power is restored.

E.1 Electrical Safety Information

⚠ WARNING

Electrical Shock Hazard

Make sure your electrical receptacle has the same configuration as your air conditioner's plug. If different, consult a Licensed Electrician.

Do not use plug adapters.
Do not use an extension cord.
Do not remove ground prong.

Always plug into a grounded 3 prong outlet. Failure to follow these instructions can result in death, fire, or electrical shock.

Make sure the wiring is adequate for your unit.

If you have fuses, they should be of the time delay type. Before you install or relocate this unit, be sure that the amperage rating of the circuit breaker or time delay fuse does not exceed the amp rating listed in Table 1.

DO NOT use an extension cord.

The cord provided will carry the proper amount of electrical power to the unit; an extension cord may not.

Make sure that the receptacle is compatible with the air conditioner cord plug provided.

Proper grounding must be maintained at all times. Two prong receptacles must be replaced with a grounded receptacle by a certified electrician.

The grounded receptacle should meet all national and local codes and ordinances. You must use the three prong plug furnished with the air conditioner. Under no circumstances should you remove the ground prong from the plug.

Table E.1

MODEL	CIRCUIT RATING OR TIME DELAY FUSE		REQUIRED WALL RECEPTACLE	
	AMP	VOLT	NEMA NO.	
CCF05, CCF06, CCF08, CCF10, CCF12, CCF14	15	125	5-15R	

E.2 Testing the Power Cord

All Friedrich room air conditioners are shipped from the factory with a Leakage Current Detection Interrupter (LCDI) equipped power cord. The LCDI device on the end of the cord meets the UL and NEC requirements for cord connected air conditioners.

To test your power supply cord:

1. Plug power supply cord into a grounded 3 prong outlet.
2. Press RESET (see Figure E.2).
3. Press TEST, listen for click; the RESET button trips and pops out.
4. Press and release RESET (Listen for click; RESET button latches and remains in). The power cord is ready for use.

Once plugged in, the unit will operate normally without the need to reset the LCDI device. If the LCDI device fails to trip when tested or if the power supply cord is damaged, it must be replaced with a new power supply cord from the manufacturer..

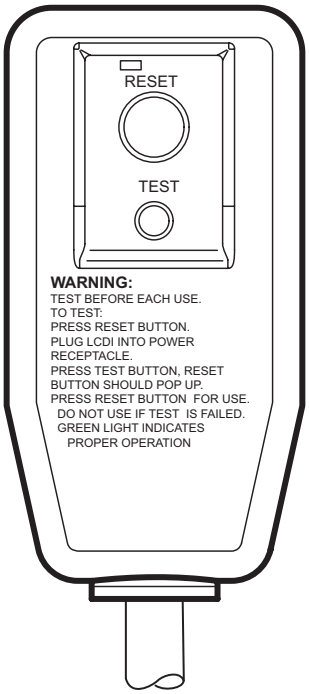

Figure E.2

J.1 Control Panel Operation

USING YOUR AIR CONDITIONER

Electronic Control Panel & Remote Control

NOTE: This display always shows the room temperature in Fan Mode except when setting the Timer.

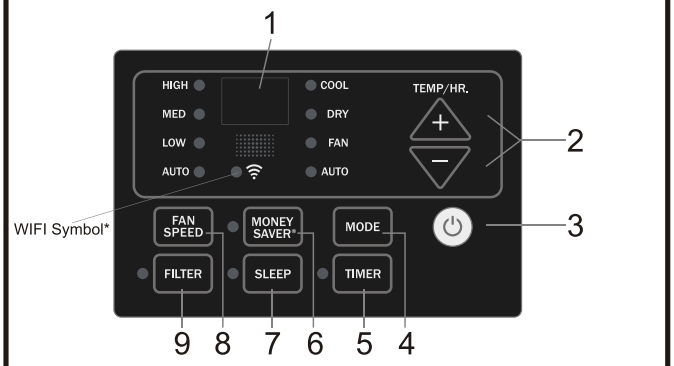

Air Conditioner Controls

NOTE: "*" means only available for WIFI models. For more information, please see the WIFI manual.

Normal Operating Sounds

- You may hear a pinging noise caused by water hitting the condenser, on rainy days, or when the humidity is high. This design feature helps remove moisture and improve efficiency.
- You may hear the thermostat click when the compressor cycles on and off.
- Water will collect in the base pan during rain or days of high humidity. The water may overflow and drip from the outside part of the unit.
- The fan may run even when the compressor is not on.

1. **Digital Display:** When the timer is not in use, the operation mode and the set temperature will be displayed. Time will be displayed under the timer setting.

2. **+ and - Button:** Use these buttons on the control panel and remote to increase or decrease the Set Temperature or Timer.
   Temperature range: 61℉~88℉ or 16℃~31℃.

3. **Button:** Turn the air conditioner on and off.

4. **Mode Button:** Press the mode button to cycle through the various modes: Cool, Dry, Fan and Auto.

Cool Mode: The cooling function allows the air conditioner to cool the room and at the same time reduces air humidity. Press the MODE button to activate the cooling function. To optimize the function of the air conditioner, adjust the temperature and the speed by pressing the button indicated.
Dry Mode: This function reduces the humidity of the air to make the room more comfortable. Press the MODE button to set the DRY mode. An automatic function of alternating cooling cycles and air fan is activated.
Fan Mode: This function only works when the air conditioner is vented. Press the MODE button to set the FAN mode. With pressing the FAN SPEED button, the speed changes in the following sequence: Hi, Med and Lo in FAN mode.

Auto Mode: In AUTO mode the unit automatically chooses the mode of operation (COOL,DRY or FAN).In this mode the temperature will be set to 73 degrees F. After placing the unit in auto mode, restart the unit by pressing the power button to engage the auto mode.

5. **Timer Button:** Use these buttons on the control panel and remote to set the Timer.
   Timer Off: The timed stop is programmed by pressing TIMER button. Set the rest time by pressing the button "+" or "-" until the rest time displayed is to your demand then press TIMER button again.
   Timer On: When the unit is off, press TIMER button at the first time, set the temperature with pressing the button "+" or "-". Press TIMER button at the second time, set the rest time with pressing the button "+" or "-". Press TIMER button at the third time, confirm the setting, then it will show on the display.

   Note: It can be set to automatically turn off or on in 0.5-24 hours. Each press of the "+" "-" buttons will increase or decrease the timer. The Timer can be set in 0.5 hours increment below 10 hours and 1 hour increment for 10 hours or above. The SET light will turn on while setting.
   To cancel the set function, press the TIMER button again.

USING YOUR AIR CONDITIONER
Electronic Control Panel & Remote Control

6. **Money Saver Button:** When the unit is in Money Saver mode, the light will turn on. In Money Saver mode, the unit will turn off once the room is cooled to the user-set temperature.
   The unit will turn back on when the room temperature rises above the user-set temperature. Before the compressor starts,the fan motor will run for a while, then it will stop for a while, and will repeat to provide a much more comfortable feeling and save energy.

7. **Sleep Button:** Press the SLEEP button, all of the display lights will turn off after a while, but the Sleep light is always on. In SLEEP mode, the air conditioner will automatically adjust the temperature and fan speed to make the room more comfortable during the night. The set temperature will automatically raise every 30-60 minutes, and at most change six times until the set temperature is 81 or 82℉.

8. **Fan Speed Button:** Press the FAN SPEED button to choose the fan speed options. You can choose Hi, Med, Lo or auto speed in COOL mode and choose Hi, Med, Lo in FAN mode.

9. **Filter Button:** When the Filter Check light is off, it is not necessary to press the Filter Check button. When the Filter Check light is on, you can turn off the light by pressing the Filter Check button. After the fan motor works for 500 total hours, the Filter Check light will turn on to remind the user to clean the filter.

10. **Directional Louvers:** To direct the airflow, use the horizontal wheel to control the horizontal direction, and use the air deflectors to control the vertical direction.

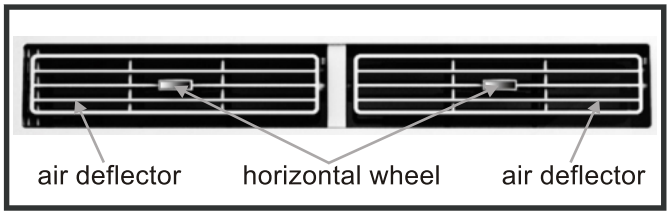

J.2 Remote Control Operation

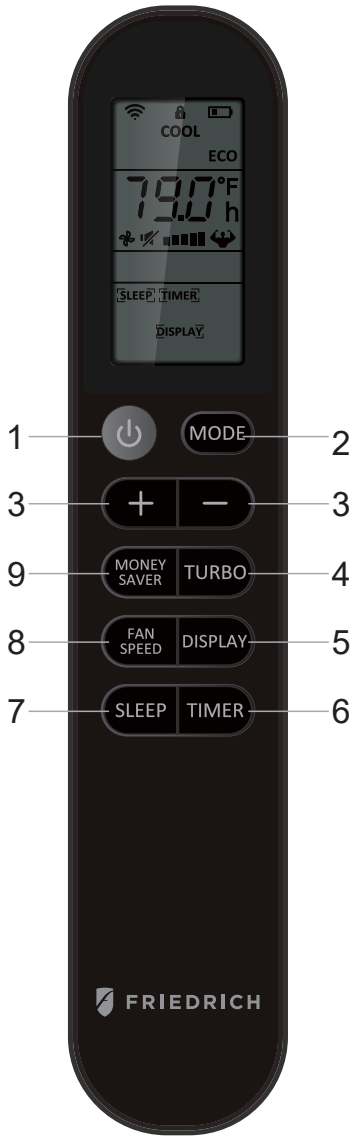

1. Power: Turn the air conditioner on and off. This button will clear the TIMER setting.
2. MODE: Press the button to select the mode of operation, AUTO, COOL, DRY, FAN ONLY, HEAT.
Note: The HEAT mode is only for some heating models. If you do not need it, press the MODE button for more than 5 seconds to delete the HEAT function, and the COOL mode will be selected automatically. Press the MODE again for more than 5 seconds to add the HEAT function, and the HEAT mode will be selected automatically.

3. + And - : Use these buttons to increase or decrease the setting Temperature or Timer. Setting temperature range: 61 ~88°F.

Note: After setting temperature with remote using the + and - buttons, both the remote display and the unit display will automatically turn off after a short time. This does not affect the unit operation.

4. TURBO: When the remote is ON, press the button to activate the TURBO function, under AUTO/COOL/FAN ONLY mode. Press again to cancel the TURBO function, and the fan speed will change to pre-setting before.
Note: °F and °C change: After inserting the batteries, in the off state within 3 minutes, press the TURBO button for more than 5 seconds to switch the Fahrenheit (°F) or Celsius (°C) degree display.

5. DISPLAY: When the unit is ON, press the button, to switch off/on all lights or LED display. And this function will be canceled when changing mode.

6. TIMER: Use the button to set the TIMER, or cancel the TIMER.

TIMER OFF: When the unit is ON, the timed OFF is programmed by pressing TIMER button, the remote will display 6 hours pre-setting at first.
Set the rest time by pressing the button or until the needed rest time display, then press TIMER button again to confirm.

TIMER ON: When the unit is OFF, the timed ON is programmed by pressing TIMER button, the remote will display 6 hours pre-setting at first. Set the rest time by pressing the button or until the needed rest time display, then press TIMER button again to confirm. Later, the remote screen will keep display [TIMER] icon.
Note: When TIMER ON, it cannot select Sleep mode, but can pre-set Mode, temperature, fan speed, ECO.

7. SLEEP: Press the SLEEP button, all of the display lights will turn off after a while, but the Sleep light is always on. In SLEEP mode, the air conditioner will automatically adjust the temperature and fan speed to make the room more comfortable during the night. The set temperature will automatically raise every 30-60 minutes and at most change six times until the set temperature is 81 or 82°F. This function can be selected when COOL or HEAT mode.

8. FAN SPEED: Press the FAN SPEED button to choose the fan speed options. You can choose Hi, Med, Lo or Auto speed in COOL or HEAT mode and choose Hi, Med, Lo in FAN mode. When DRY mode, it is only Low fan speed.

9. MONEY SAVER: When the unit is in COOL mode, press the button to MONEY SAVER function. In MONEY SAVER mode, the unit will turn off once the room is cooled to the user set temperature. The unit will turn back on when the room temperature rises above the user set temperature. Before the compressor starts, the fan motor will run for 20 sec., then it will stop for 10 min., and will repeat to provide a much more comfortable feeling and save energy.

Battery size: AAA
Note: Do not mix old and new batteries or different types of AAA batteries.

J. STARTUP AND OPERATION

J.3 Start-up

This is a warm weather appliance

Your air conditioner is designed to cool in warm weather when the outside temperature is above 60°F (15.6°C) and below 115°F (46.1°C), so it won't cool a room if it is already cool outside.

Condensation is normal

Air conditioners actually pump the heat and humidity from your room to the outside. Humidity becomes water, and your air conditioner will use most of the water to keep the outside coil cool. If there is excessive humidity, there may be excess water that will drip outside. This is normal operation.

Frosting

This usually occurs because of insufficient airflow across the coils, a dirty filter, cool damp weather, or all these. Set the SYSTEM mode to FAN ONLY and the frost will disappear. Setting the thermostat a little warmer will probably prevent the frosting from recurring.

Noises

All air conditioners make some noise. Friedrich units are designed to operate as quietly as possible. An air conditioner mounted in a wall is quieter than one mounted in a window. It is important to ensure that the chassis seal gasket is properly installed (refer to the Installation Instructions).

L. WiFi

Use a QR Reader on your phone to Scan this QR Code. It will take you to the Wifi Instructions page of our website..

FriedrichGo

iOS

Android

M.1. Troubleshooting Tips

COMPLAINT	CAUSE	SOLUTION
Unit does not operate.	• The unit is turned to the off position, or the thermostat is satisfied.	• Turn the unit to the on position and raise or lower temperature setting (as appropriate) to call for operation.
	• The LCDI power cord is unplugged.	• Plug into a properly grounded 3 prong receptacle. See “Electrical Rating Tables” on Page 6 for the proper receptacle type for your unit.
	• The LCDI power cord has tripped (Reset button has popped out).	• Press and release RESET (Listen for click. Reset button latches and remains in.) to resume operation.
	• The circuit breaker has tripped or the supply circuit fuse has blown.	• Reset the circuit breaker, or replace the fuse as applicable. If the problem continues, contact a licensed electrician.
	• There has been a local power failure.	• The unit will resume normal operation once power has been restored.
Unit Trips Circuit Breaker or Blows Fuses.	• Other appliances are being used on the same circuit.	• The unit requires a dedicated outlet circuit, not shared with other appliances.
	• An extension cord is being used.	• Do NOT use an extension cord with this or any other air conditioner.
	• The circuit breaker or time-delay fuse is not of the proper rating.	• Replace with a circuit breaker or time-delay fuse of the proper rating. See “Electrical Rating Tables” on Page 6 for the proper circuit breaker/fuse rating for your unit. If the problem continues, contact a licensed electrician.
LCDI Power Cord Trips (Reset Button Pops Out).	• The LCDI power cord can trip (Reset button pops out) due to disturbances on your power supply line.	• Press and release RESET (Listen for click. Reset button latches and remains in.) to resume normal operation.
	• Electrical overload, overheating, or cord pinching can trip (Reset button pops out) the LCDI power cord.	• Once the problem has been determined and corrected, press and release RESET (Listen for click. Reset button latches and remains in.) to resume normal operation.
	NOTE: A damaged power supply cord must be replaced with a new power supply cord obtained from the product manufacturer and must not be repaired.	
Unit Does Not Cool Room Sufficiently, or Cycles On And Off Too Frequently.	• The return/discharge air grille is blocked.	• Ensure that the return and/or discharge air paths are not blocked by curtains, blinds, furniture, etc.
	• Windows or doors to the outside are open.	• Ensure that all windows and doors are closed.
	• The temperature is not set at a cool enough enough setting.	• Adjust the Temperature control to a cooler or warmer setting as necessary.
	• The filter is dirty or obstructed.	• Clean the filter, (see Routine Maintenance), or remove obstruction.
	• The indoor coil or outdoor coil is dirty or obstructed.	• Clean the coils, (see Routine Maintenance), or remove obstruction.
	• There is excessive heat or moisture (cooking, showers, etc.) in the room.	• Be sure to use exhaust vent fans while cooking or bathing and, if possible, try not to use heat producing appliances during the hottest part of the day.
	• The temperature of the room you are trying to cool is extremely hot.	• Allow additional time for the air conditioner to cool off a very hot room.
Unit Does Not Cool Room Sufficiently, or Cycles On And Off Too Frequently (continued).	• The outside temperature is below 60 °F (16 °C).	• Do not try to operate your air conditioner in the cooling mode when the outside temperature is below 60 °F (16 °C). The unit will not cool properly, and the unit may be damaged.
	• The digital control is set to fan cycling mode.	• Since the fan does not circulate the room air continuously at this setting, the room air does not mix as well and hot (or cold) spots may result. Using the continuous fan setting is recommended to obtain optimum comfort levels.
	• The air conditioner has insufficient cooling capacity to match the heat gain of the room.	• Check the cooling capacity of your unit to ensure it is properly sized for the room in which it is installed. Room air conditioners are not designed to cool multiple rooms.
	• The air conditioner has insufficient heating capacity to match the heat loss of the room.	• Check the heating capacity of your unit. Air conditioners are sized to meet the cooling load, and heater size is then selected to meet the heating load. In extreme northern climates, room air conditioners may not be able to be used as a primary source of heat.

M. TROUBLESHOOTING

COMPLAINT	CAUSE	SOLUTION
Unit Runs Too Much.	• This may be due to an excessive heat load in the room.	• If there are heat producing appliances in use in the room, or if the room is heavily occupied, the unit will need to run longer to remove the additional heat.
	• It may also be due to an improperly sized unit.	• Be sure to use exhaust vent fans while cooking or bathing and, if possible, try not to use heat producing appliances during the hottest part of the day.
	• This may be normal for higher efficiency (EER) air conditioners.	• The use of higher efficiency components in your new air conditioner may result in the unit running longer than you feel it should. This may be more apparent, if it replaced an older, less efficient, model. The actual energy usage, however, will be significantly less when compared to older models.
	• You may notice that the discharge air temperature of your new air conditioner may not seem as cold as you may be accustomed to from older units. This does not; however, indicate a reduction in the cooling capacity of the unit.	• The energy efficiency ratio (EER) and cooling capacity rating (Btu/h) listed on the unit's rating plate are both agency certified.

R . INFORMATION FOR THE OWNER

R.1 Routine Maintenance

CARE AND CLEANING

Clean your air conditioner to keep it looking new and to minimize dust build up.

Air Filter Cleaning

The air filter should be checked at least once every month to see if it needs cleaning. Trapped particles and dust can build up in the filter and may decrease airflow as well as cause the cooling coils to accumulate frost. To clean the air filter:

1. Remove the filter by pulling down on the indents of the filter door on the front of the unit. (See FIG. 15)
2. Wash the filter using liquid dish soap and warm water. Rinse the filter thoroughly. Gently shake the filter to remove excess water.
3. Let the filter dry completely before placing it into the air conditioner.
4. If you do not wish to wash the filter, you may vacuum the filter to remove the dust and other particles.

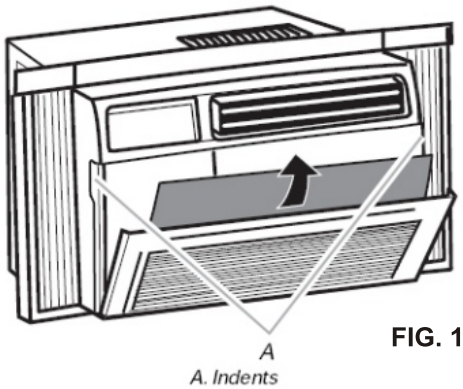

FIG. 15

Wear and Tear

To minimize wear and tear on the air conditioner, always wait at least 3 minutes before changing modes. This will help prevent the compressor from overheating and the circuit breaker from tripping.

Cabinet Cleaning

To clean the air conditioner cabinet:

- Unplug the air conditioner to prevent shock or a fire hazard. The cabinet and front panel of the air conditioner may be dusted with an oil-free cloth or washed with a cloth dampened in a solution of warm water and mild liquid soap. Rinse thoroughly with a damp cloth and wipe dry.
- Never use harsh cleaners, wax or polish on the cabinet front.
- Be sure to wring excess water from the cloth before wiping around the controls. Excess water in or around the controls may cause damage to the air conditioner.

Winter Storage

To store the air conditioner when it is not in use for an extended period of time, remove it carefully from the window according to the installation instructions and cover it with plastic or place it in the original box.

⚠WARNING: Service of this product (aside from filter maintenance) shall only be performed by trained service personnel. Refer to the Service Manual for procedures on how to inspect and maintain the interior of the unit and its components. A QR code is located in section A.4 which will help you locate the service manual online.