Installation and Operation Manual

FRIEDRICH

Room Air Conditioners

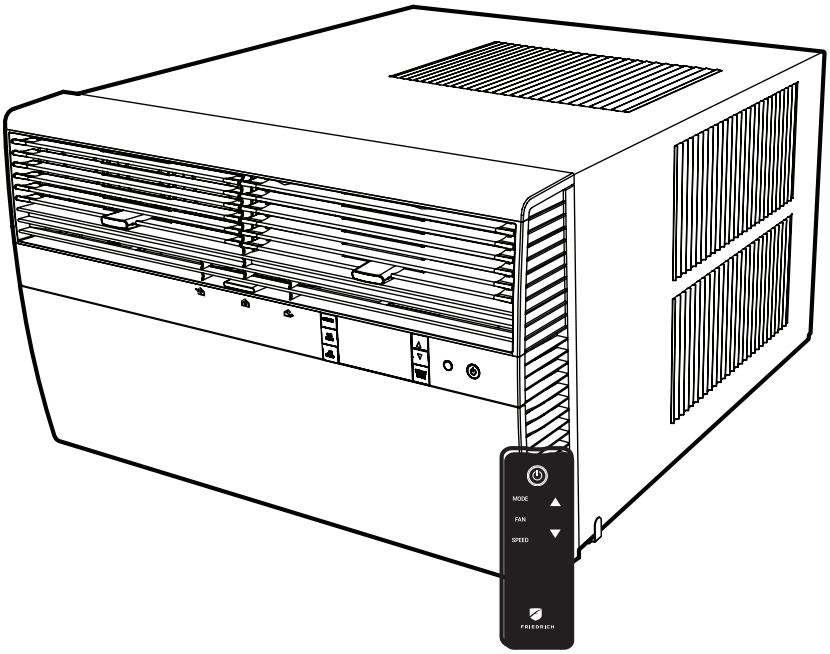

Standard Chassis Models

Kühl	**115-Volt:**	KCS08, KCS10, KCS12, KCS14
	230-Volt:	KCS12, KCS16, KCM18, KCM21, KCM24 KCL22, KCL24, KCL28, KCL36
Kühl + *Electric Heat*	**115-Volt:**	KHS10
	230-Volt:	KES12, KES16, KH12, KEM18 KHM18, KHM24, KEL36, KHL24
Kühl + *Heat Pump*		

93001015_00

Thank you for your decision to purchase the Friedrich High Efficiency Air Conditioner. Your new Friedrich has been carefully engineered and manufactured to give you many years of dependable, efficient operation, maintaining a comfortable temperature and humidity level. Many extra features have been built into your unit to assure quiet operation, the greatest circulation of cool, dry air, and the most economic operation.

THANK YOU, on behalf of our entire company, for making such a wise purchase.

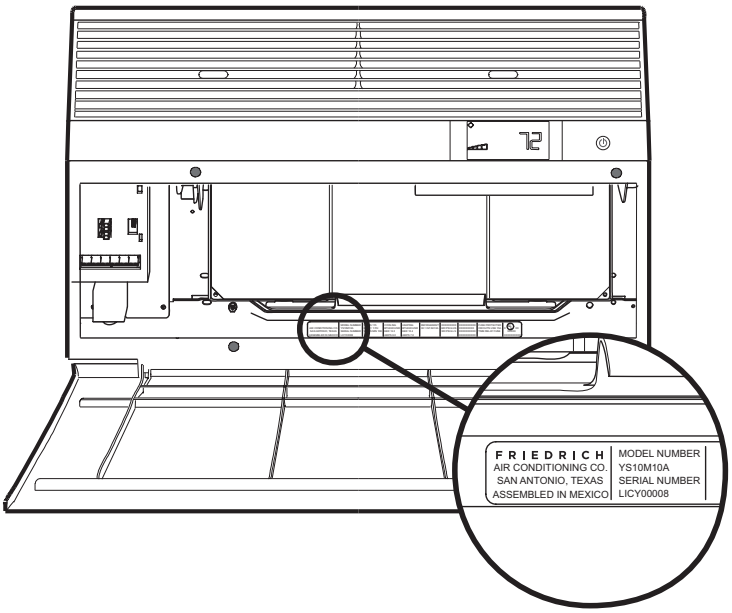

Register your air conditioner

Model information can be found on the name plate behind the front cover.

Please complete and mail the owner registration card furnished with this product, or register online at www.friedrich.com.

For your future convenience, record the model information here.

MODEL NUMBER

SERIAL NUMBER

PURCHASE DATE

Table of Contents

Safety Precautions 4
Unpacking Instructions 5
WARNING: Before Operating Your Unit 6
Standard Filter Cleaning / Installation Instructions 7
Premium Carbon Filter Installation Instructions 8
Control Panel Operation 9
New Kühl Control Options 22
Wi-Fi Set-Up Instructions 23
Control Panel Operation Instructions 24
Remote Control Operation 25
Remote Effectiveness 25
Airflow Selection and Adjustment 26
Installation Instructions 27
Installation Hardware and Accessory Details 28
Standard Window Installation 29
Cord Routing Change 38
Thru-the-Wall Installation 40
Final Inspection & Start-up Checklist 44
Routine Maintenance 45
Service and Assistance 45
Available Accessories 45
Troubleshooting Tips 46
Warranty 48
Performance Installation & Test Method Addendum 49

Safety Precautions

Your safety and the safety of others is very important.

We have provided many important safety messages in this manual and on your appliance. Always read and obey all safety messages.

This is a safety Alert symbol.
This symbol alerts you to potential hazards that can kill or hurt you and others.

⚠ WARNING

All safety messages will follow the safety alert symbol with the word "WARNING" or "CAUTION". These words mean:

Indicates a hazard which, if not avoided, can result in severe personal injury or death and damage to product or other property.

⚠ CAUTION

Indicates a hazard which, if not avoided, can result in personal injury and damage to product or other property.

NOTICE

All safety messages will tell you what the potential hazard is, tell you how to reduce the chance of injury, and tell you what will happen if the instructions are not followed.

Indicates property damage can occur if instructions are not followed.

⚠ WARNING

Refrigeration system under high pressure

Do not puncture, heat, expose to flame or incinerate.

Only certified refrigeration technicians should service this equipment.

R410A systems operate at higher pressures than R22 equipment. Appropriate safe service and handling practices must be used.

Only use gauge sets designed for use with R410A. Do not use standard R22 gauge sets.

THINK	⚠ WARNING	⚠ AVERTISSEMENT	⚠ ADVERTENCIA
SAFETY FIRST	Do not remove, disable or bypass this unit's safety devices. Doing so may cause fire, Doing so may cause fire, injuries, or death.	Ne pas supprime, désactiver ou contourner cette l´unité des dispositifs de sécurité, faire vous risqueriez de provoquer le feu, les blessures ou la mort.	No eliminar, desactivar o pasar por alto los dispositivos de seguridad de la unidad. Si lo hace podría producirse fuego, lesiones o muerte.

Unpacking Instructions

STEP 1. Cut all 4 packing straps.

STEP 2. Remove wooden shipping bar dividers.

STEP 3. Remove top foam pads.

STEP 4. Slowly remove outer box, careful not to loosen decorative front.

STEP 5. Slide the front forward.

STEP 6. Carefully lift decorative front box from foam front support.

STEP 7. Remove decorative front and set safely aside.

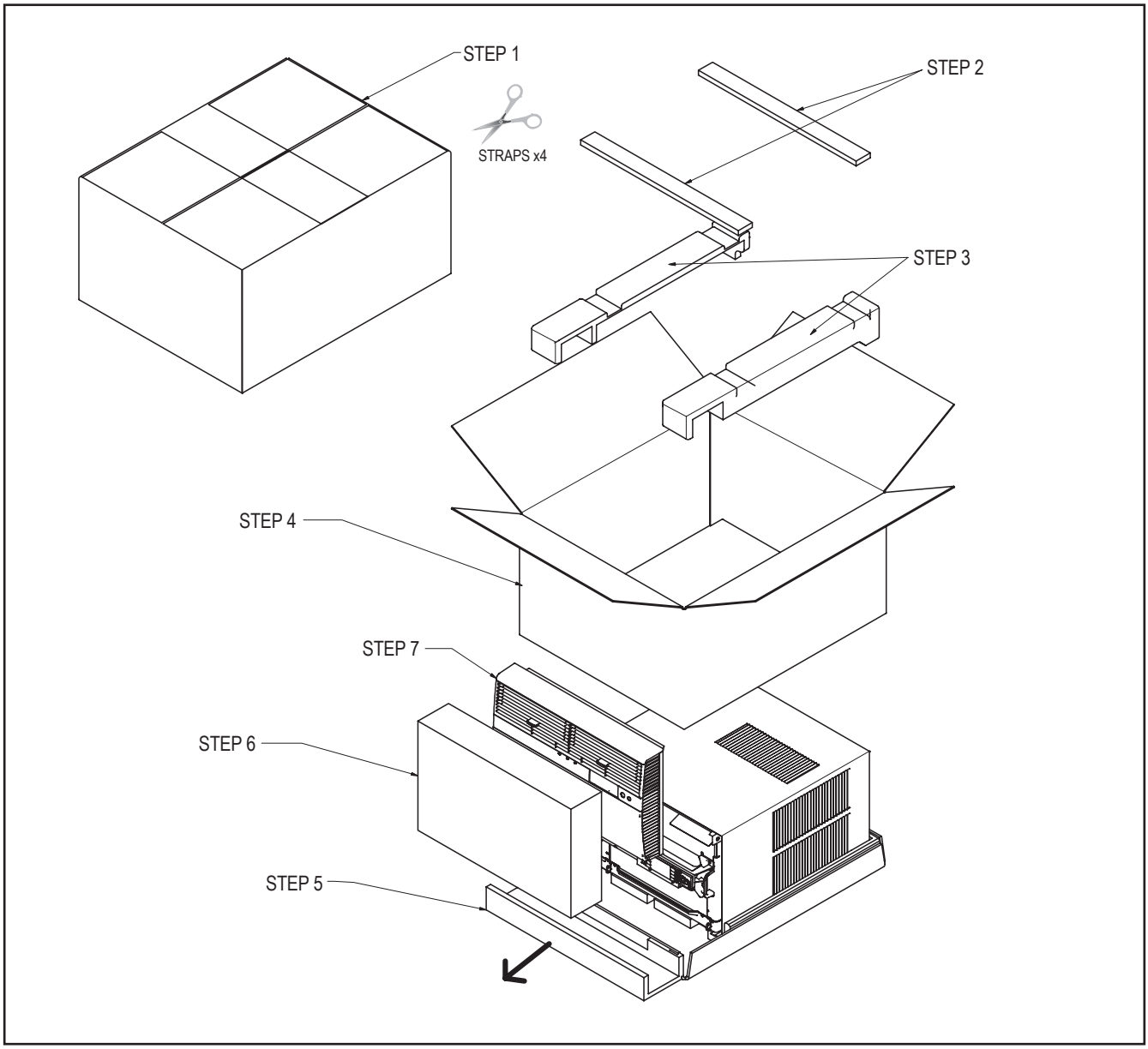

WARNING: Before Operating Your Unit

⚠ WARNING

Electrical Shock Hazard

Make sure your electrical receptacle has the same configuration as your air conditioner's plug. If different, consult a Licensed Electrician.

Do not use plug adapters.
Do not use an extension cord.
Do not remove ground prong.

Always plug into a grounded 3 prong outlet. Failure to follow these instructions can result in death, fire, or electrical shock.

Make sure the wiring is adequate for your unit.

If you have fuses, they should be of the time delay type. Before you install or relocate this unit, be sure that the amperage rating of the circuit breaker or time delay fuse does not exceed the amp rating listed in Table 1.

DO NOT use an extension cord.

The cord provided will carry the proper amount of electrical power to the unit; an extension cord may not.

Make sure that the receptacle is compatible with the air conditioner cord plug provided.

Proper grounding must be maintained at all times. Two prong receptacles must be replaced with a grounded receptacle by a certified electrician.

The grounded receptacle should meet all national and local codes and ordinances. You must use the three prong plug furnished with the air conditioner. Under no circumstances should you remove the ground prong from the plug.

Test the power cord.

All Friedrich room air conditioners are shipped from the factory with a Leakage Current Detection Interrupter (LCDI) equipped power cord. The LCDI device on the end of the cord meets the UL and NEC requirements for cord connected air conditioners.

To test your power supply cord:

1. Plug power supply cord into a grounded 3 prong outlet.
2. Press RESET (see Figure 1).
3. Press TEST, listen for click; the RESET button trips and pops out.
4. Press and release RESET (Listen for click; RESET button latches and remains in). The power cord is ready for use.

NOTICE

Do not use the LCDI device as an ON/OFF switch.

Failure to adhere to this precaution may cause premature equipment malfunction.

Once plugged in, the unit will operate normally without the need to reset the LCDI device. If the LCDI device fails to trip when tested or if the power supply cord is damaged, it must be replaced with a new power supply cord from the manufacturer. Contact our Technical Assistance Line at (800) 541-6645. To expedite service, please have your model number available.

Table 1

MODEL	CIRCUIT RATING OR TIME DELAY FUSE		REQUIRED WALL RECEPTACLE	
	AMP	VOLT	NEMA NO.	
KCS08, KCS10 KCS12, KCS14 KHS10	15	125	5-15R	
KCS12, KCS16 KCM18, KCM21 KCL22	15	250	6-15R	
KCM24, KCL28 KES12, KES16 KHS12, KCL24	20	250	6-20R	
KCL36, KEM18 KEM24, KEL36 KHM18, KHL24	30	250	6-30R	

Figure 1

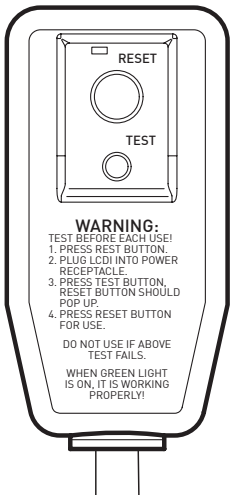

FRR072

Standard Filter Cleaning / Installation Instructions

STEP 1. Swing the door open and remove the filter by grasping the filter grip and pushing the filter holder upward and outward.

Figure 2

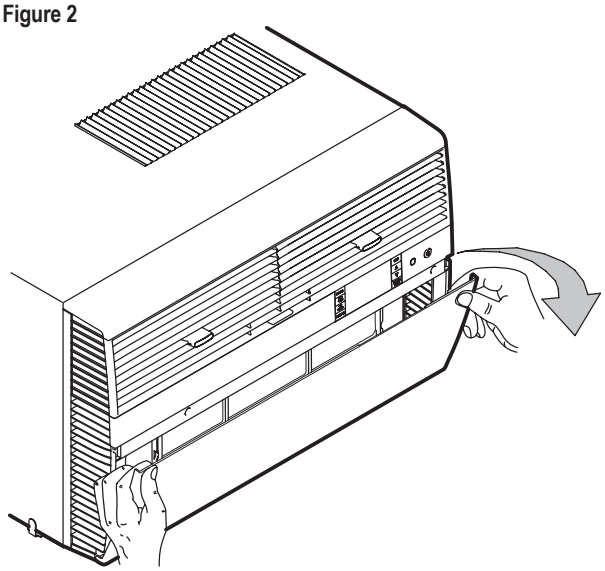

FRR071

Figure 3

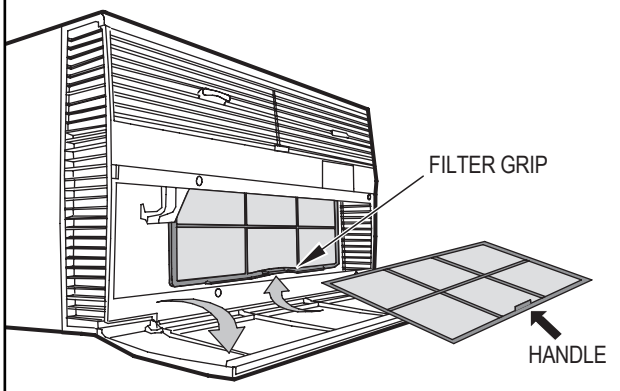

FRR052

STEP 2. Slide the filter grip out from the filter as shown in Figure 4.

NOTE: Make sure the front frame with the mesh filter is facing you.

Figure 4

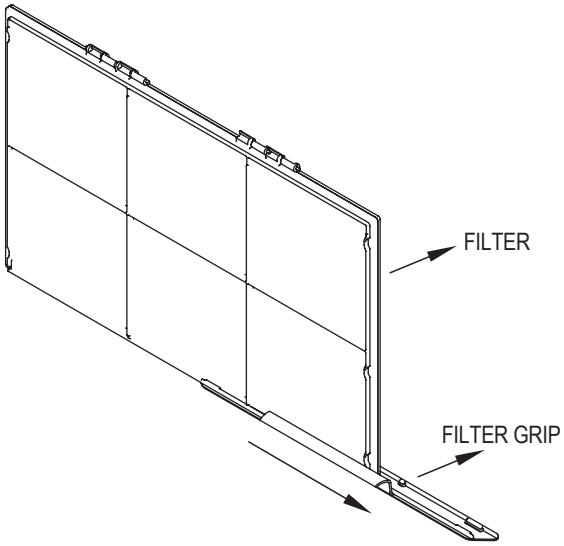

FRR047

STEP 3. Swing the front frame open. Clean the front frame by washing the dirt from the filter. Use a mild soap solution if necessary. Allow filter to dry.

Figure 5

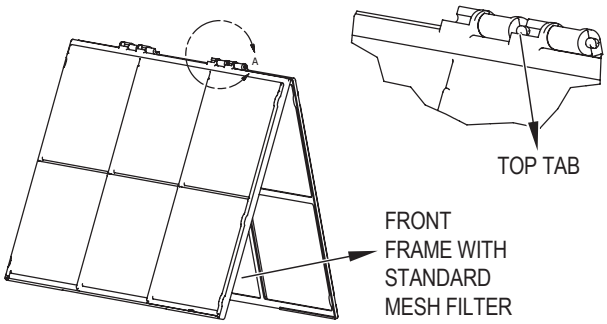

FRR048

STEP 4. Install the filter grip back into the filter by sliding it into the filter.

NOTE: The filter handle slides into the frame in only one direction. If the tab in the frame stops the handle from sliding in, slide the handle from the other direction. DO NOT FORCE THE HANDLE INTO THE FRAME.

STEP 5. Install the filter back into the unit. Follow the instructions on the inside of the front door.

Premium Carbon Filter Installation Instructions

STEP 1. Remove the filter from the unit as per the instructions on the inside of the filter door.

STEP 2. Hold the filter at the top and slide the grip out as shown in Figure 4.

STEP 3. If you already have a carbon filter installed remove the dirty filter by laying the filter down and swinging open the front frame as shown in Figure 6.

NOTE: Make sure the frame with the mesh is facing toward you.

STEP 4. Place the new carbon filter on the top of the back filter frame. The carbon filter has been cut to the correct dimension and should fit within the frame as shown in Figure 7.

NOTE: The carbon filter is not a reusable filter, and needs to be replaced every three months for optimum efficiency.

STEP 5. Slide the filter handle back on to hold the frames together and slide the assembly into the unit as per the instructions on the door.

NOTE: The filter handle slides into the frame in only one direction. If the tab in the frame stops the handle from sliding in, slide the handle from the other direction. DO NOT FORCE THE HANDLE INTO THE FRAME.

Figure 6

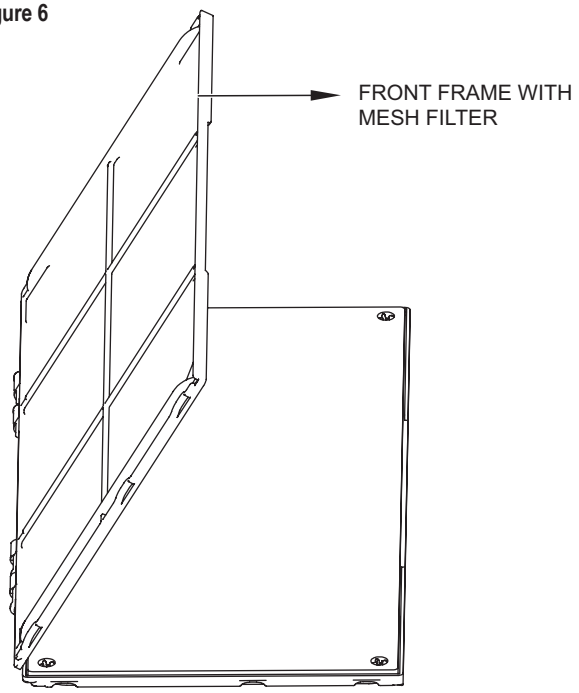

FRR050

Figure 7

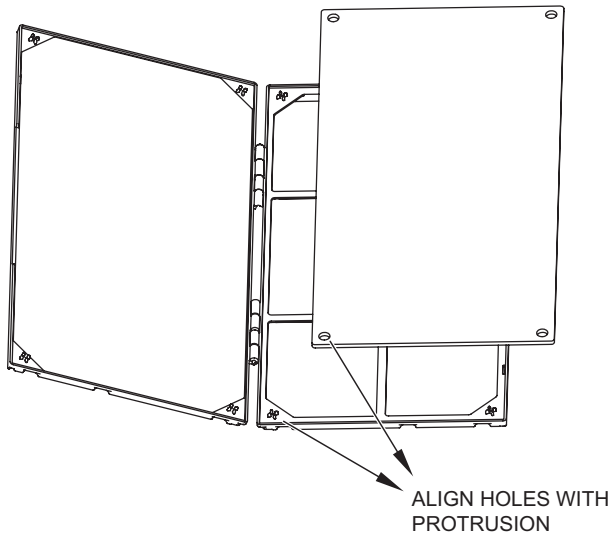

FRR051

Control Panel Operation

All of the control panel function buttons and mode icons can be viewed in Figure 8.

Power On – Press the button to turn on the air conditioner. The power button illuminates to indicate that the power is on. The backlight on the power switch will automatically turn off after 20 seconds of inactivity. The remote control can also be used to turn power ON / OFF (see Remote Control).

Display – The display is a high efficiency LCD with a built-in backlight. After 20 seconds of inactivity, the display switches off. Touching any button automatically changes the display to full brightness.

There are three control push buttons on each side of the display.

Figure 8

SYSTEM
Cycles between AUTO, HEAT, COOL, or FAN ONLY (if equipped)

FAN MODE
Sets fan to either:
- Cycle automatically
- Run continuously

FAN SPEED
Sets fan speed: LOW, MED, HIGH or AUTO (if equipped)

TEMPERATURE Increment UP

TEMPERATURE Increment DOWN

TIMER
Turns ON or OFF

IR WINDOW
Do not block

ON / OFF
Turns unit on/ off

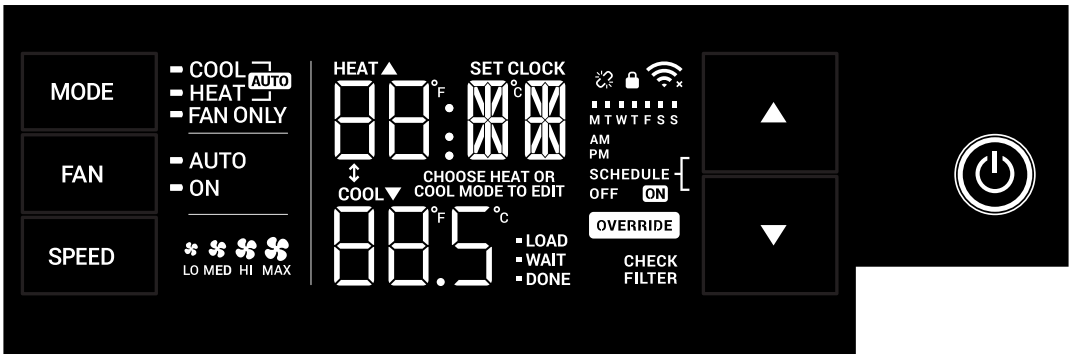

Figure 9

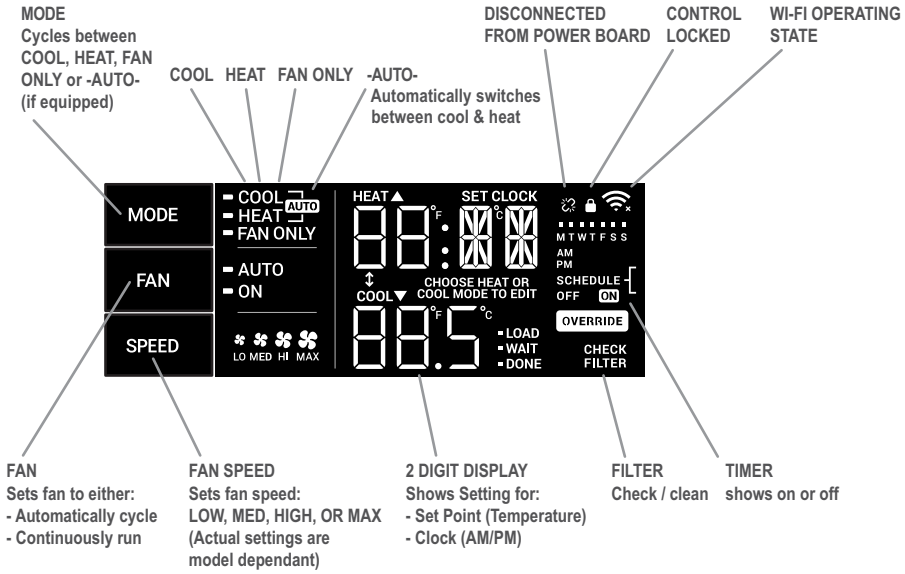

Control Panel Operation

Accessing Sub-Menus

The leftmost MENU button accesses the sub-menu. See Figure 10.

The arrow buttons navigate the 6 menu options (See Figure 11):

– LIM – LOCK
– TM – CnCT
– F-C – diAG

The rightmost button exits the menu. See Figure 12.

Figure 10

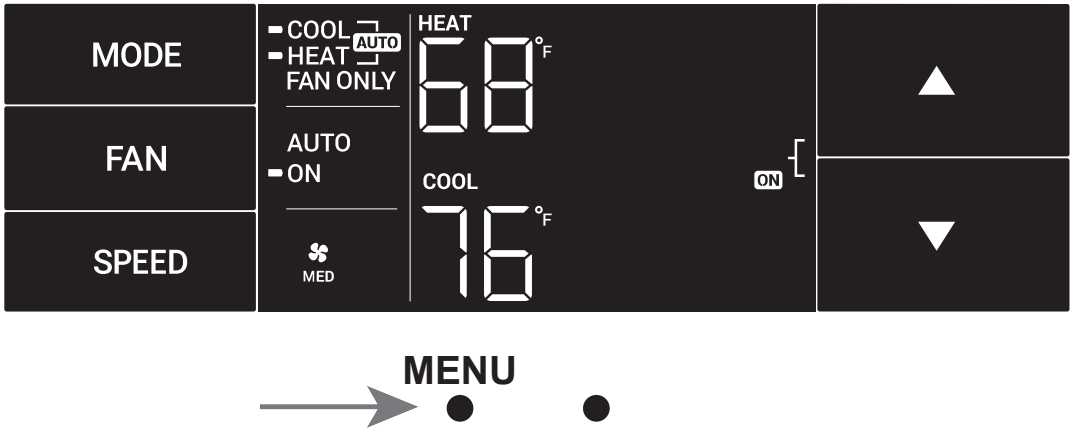

Figure 11

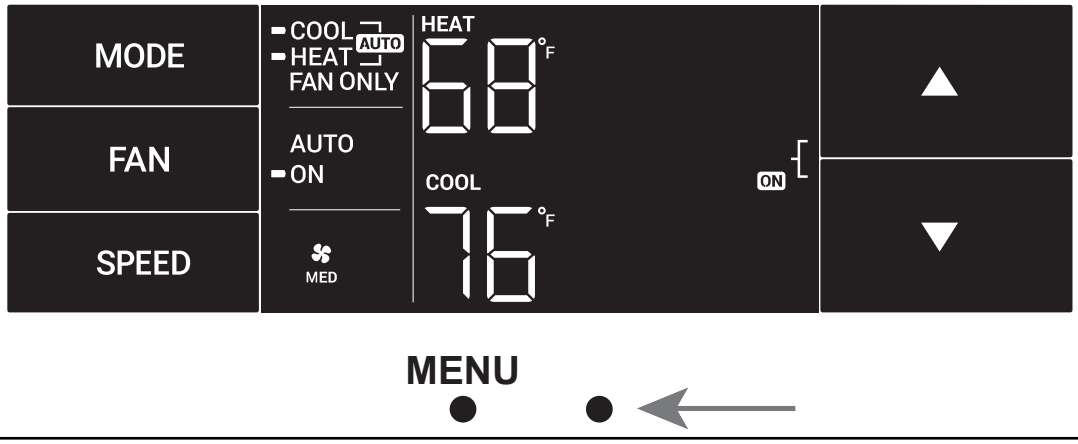

Figure 12

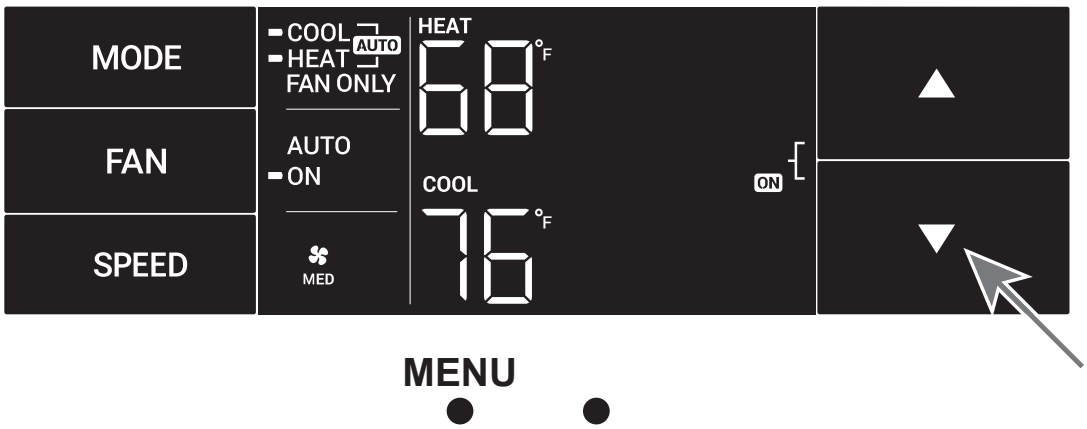

Control Panel Operation

Navigating Inside the Sub-Menus

The leftmost MENU button moves you forward through the sub-menu. See Figure 13.

The rightmost button moves you backward once inside the LIM and TM menus. See Figure 14.

Figure 13

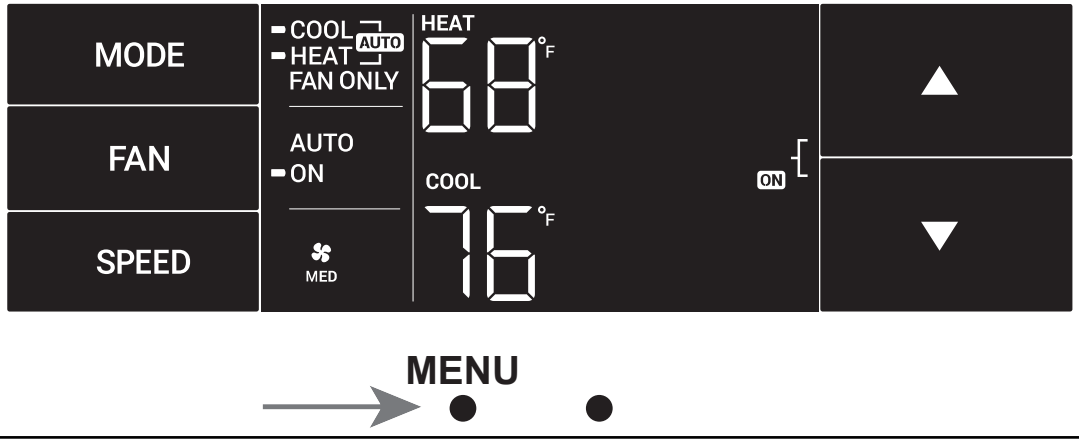

Figure 14

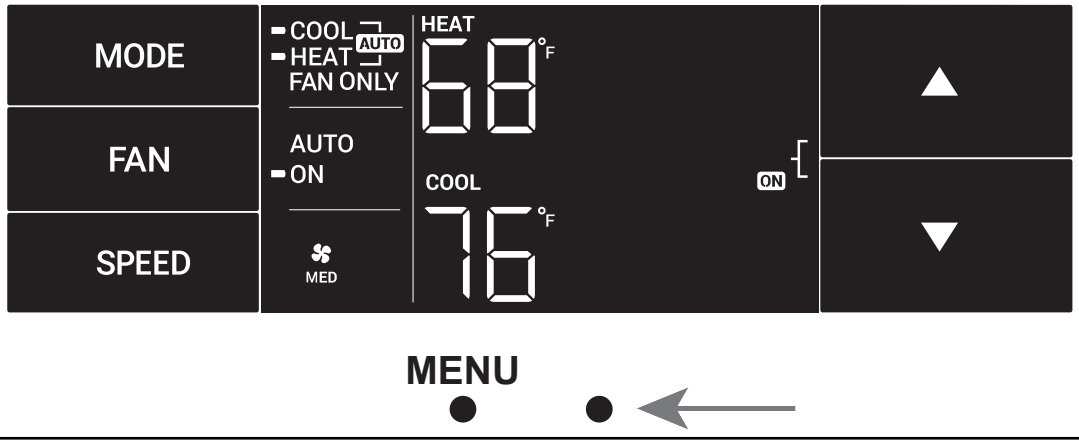

Control Panel Operation

The LIM Menu

This is the limit menu. See Figure 15.

Upon entering the menu, the first option will be to set the lower setpoint limit using the arrow buttons. See Figure 16.

Then you can set the higher setpoint limit using the arrow buttons. See Figure 17.

Pressing the leftmost button completes the limit setting. See Figure 18.

Figure 15

Figure 16

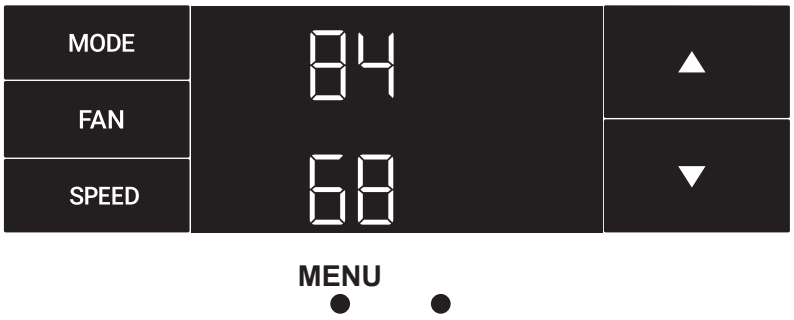

Figure 17

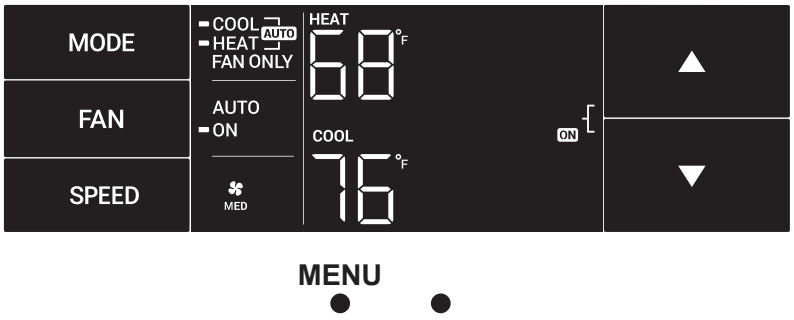

Figure 18

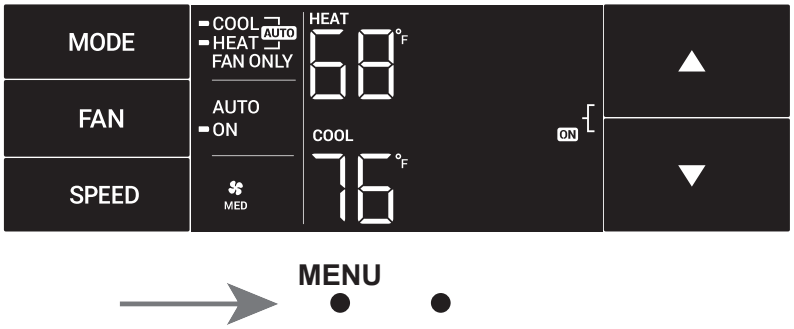

Control Panel Operation

The TM Menu

This is the TM menu used to set a timer. See Figure 19.

In the menu, you set the current time using the arrow buttons. See Figure 20. (Note: These two “set clock” steps will be skipped if the unit is already connected to Wi-Fi.)

First, set the hour.

Using the leftmost button, you switch to the minutes and complete setting the time. See Figure 21.

You select your mode. Either cool, heat, or auto. Toggle these using the arrow buttons. See Figure 22. (Note: cooling-only models skip this step.)

The process is the same for all three modes. Auto mode will be shown as the example.

Figure 19

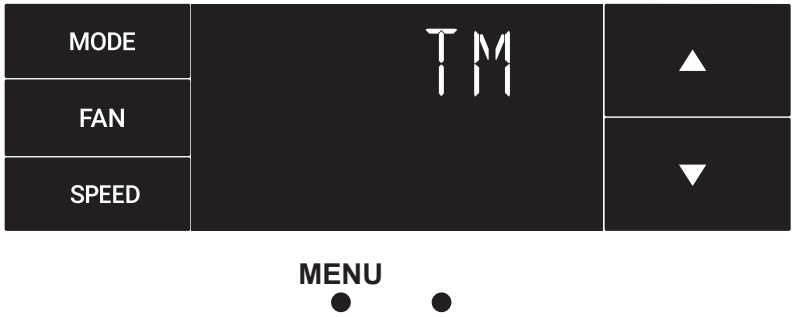

Figure 20

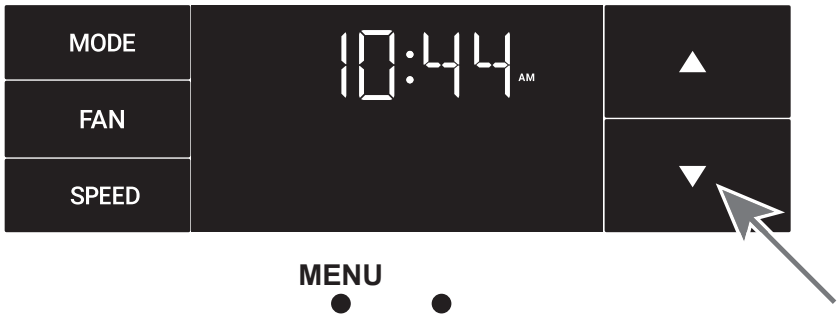

Figure 21

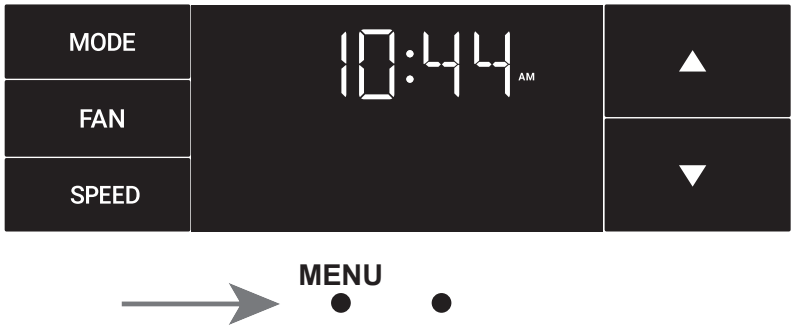

Figure 22

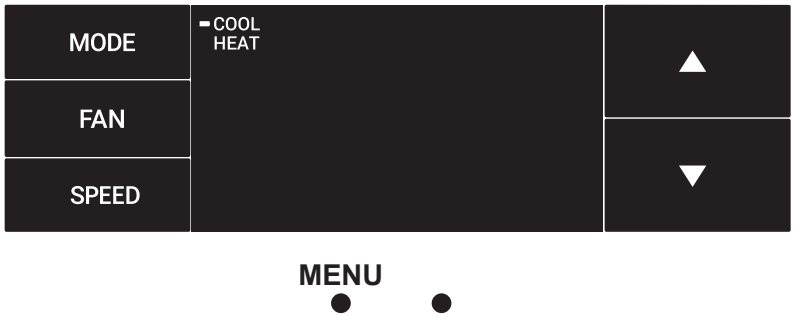

Control Panel Operation

The TM Menu continued

Auto mode selected. See Figure 23.

Set the cool setpoint for your first timer period using the arrow buttons. The cooling mode timer only sets the cool setpoint. See Figure 24.

Next, set the heat setpoint for your first timer period. The heating mode timer only sets the heat setpoint. See Figure 25.

Note: The auto mode timer sets both the cool and heat setpoint.

Set the time to start the first timer period. See Figure 26.

Figure 23

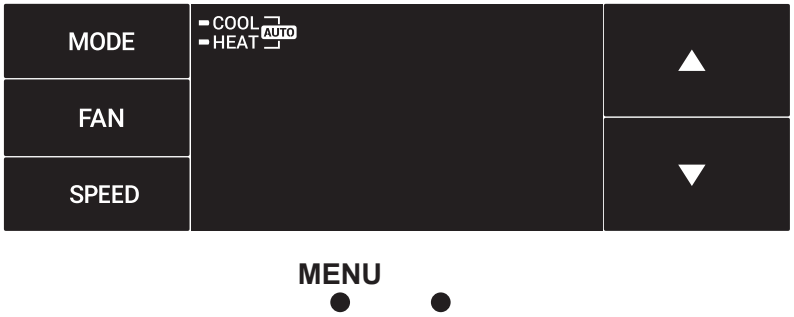

Figure 24

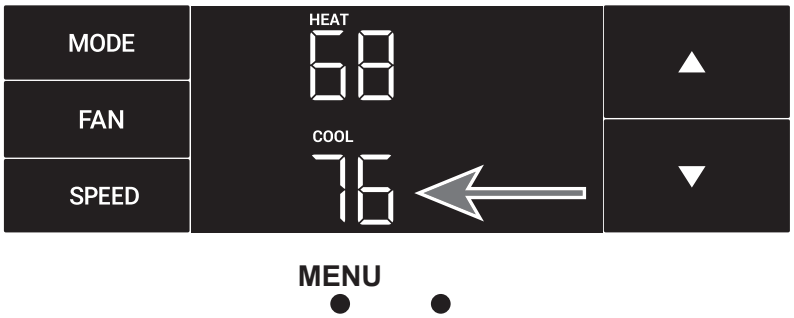

Figure 25

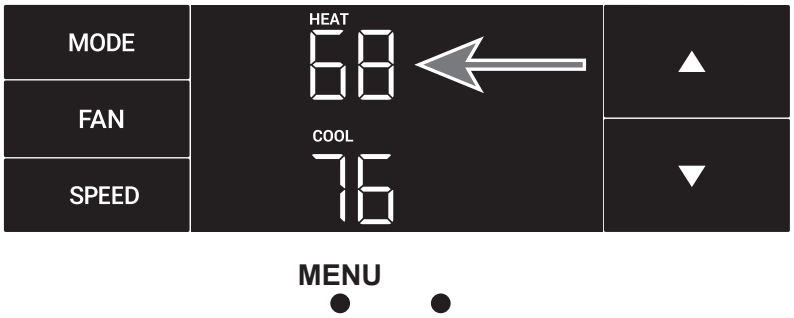

Figure 26

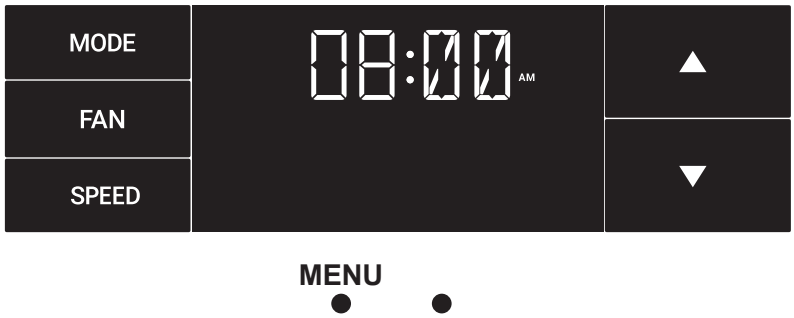

Control Panel Operation

The TM Menu continued

Set the cool setpoint for the second scheduled timer. See Figure 27.

Set the heat setpoint for the second timer.

Set the time to start the second timer period. See Figure 28.

Press the leftmost button to complete the time timer setup.
See Figure 29.

Figure 27

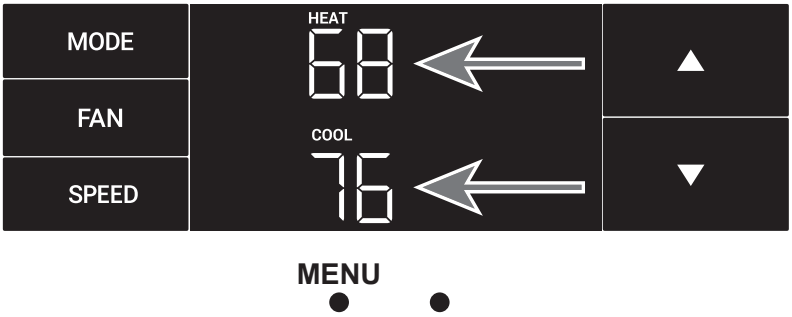

Figure 28

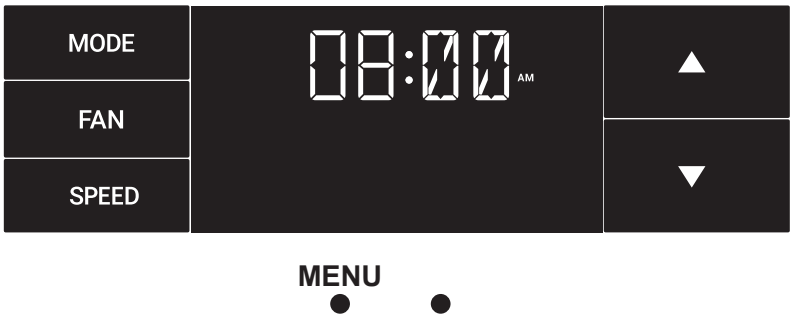

Figure 29

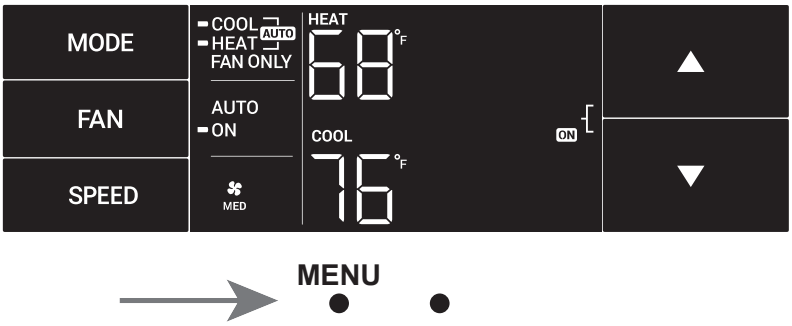

Control Panel Operation

The F-C Menu

This menu is used to toggle between Fahrenheit and Celsius.

This is the Fahrenheit/ Celsius Menu. See Figure 30.

Using the arrow buttons on the right side switches it from Fahrenheit to Celsius. See Figures 31 and 32.

Figure 30

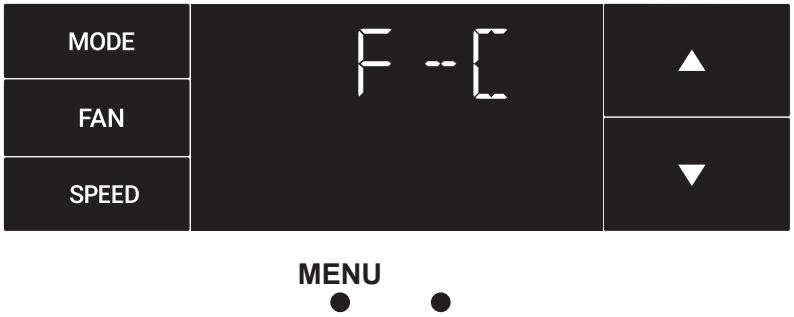

Figure 31

Figure 32

Control Panel Operation

The Lock Menu

This menu is used to lock the changing setting with a password.

This is the Lock Menu. See Figure 33.

The default is the off setting. Use the arrows to toggle between off and on. See Figure 34.

This is LOCK on. See Figure 35.

Set the first digit of the password using the arrow buttons. Use the left-most button to proceed to the next digit. See Figure 36.

Figure 33

Figure 34

Figure 35

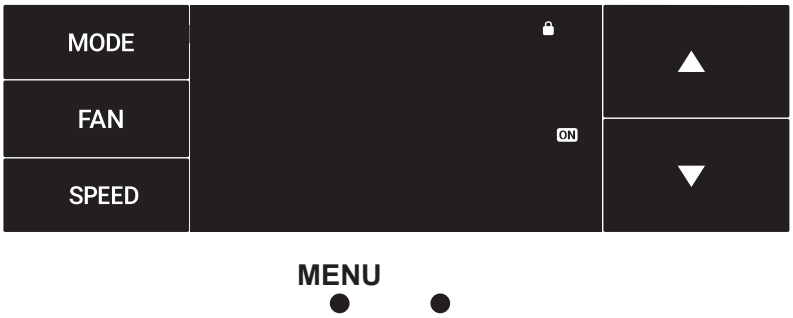

Figure 36

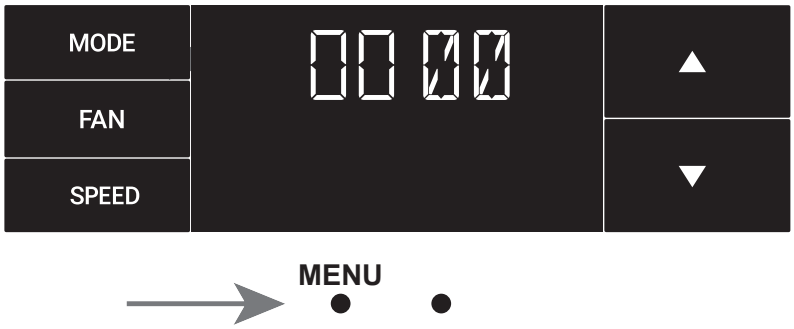

Control Panel Operation

The Lock Menu continued

Set the second digit of the password using the same method. See Figure 37.

Set the third digit of the password using the same method. See Figure 38.

Set the fourth digit of the password using the same method. See Figures 39.

Press the leftmost button to complete the password process. See Figure 40.

Figure 37

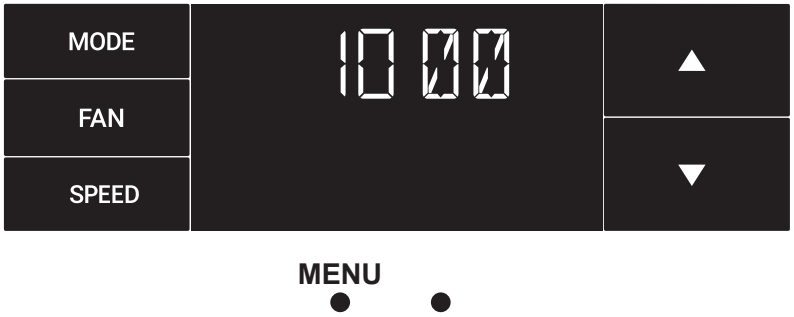

Figure 38

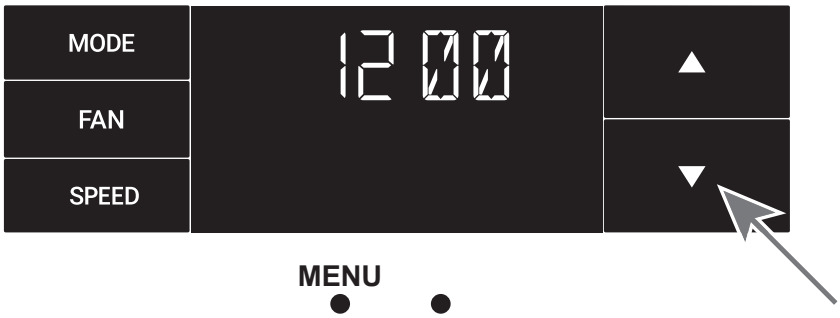

Figure 39

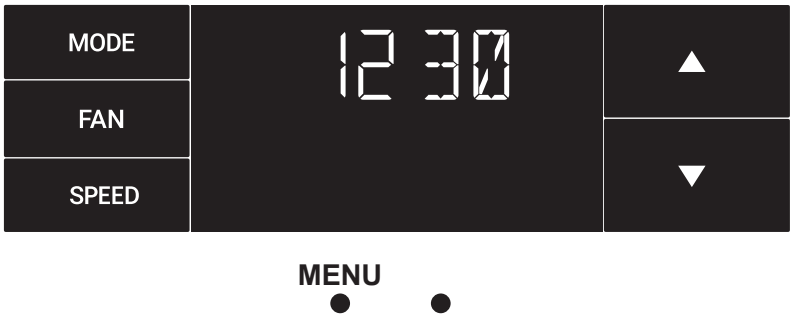

Figure 40

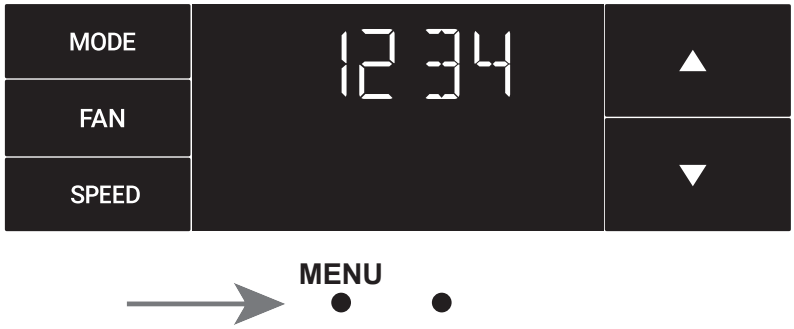

Control Panel Operation

The Lock Menu continued

The ON on the right side of the display shows the lock function is active. To go back into the menu, select the leftmost button again. See Figure 41.

Enter the password in the same manner it was created. See Figure 42.

Entering the correct password will give the user access to all of the sub-menus. See Figure 43.

Accessing the lock menu will allow you to toggle lock OFF if needed. See Figure 44.

Figure 41

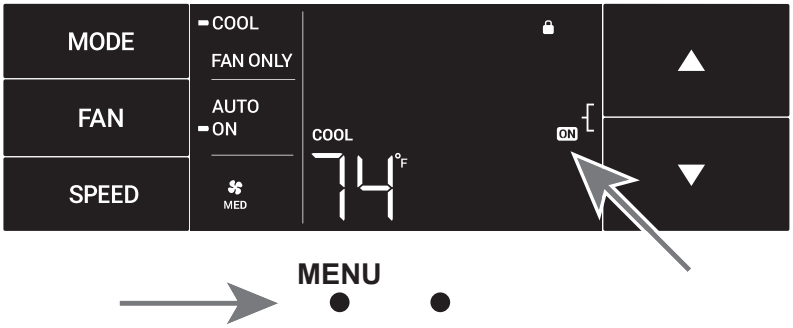

Figure 42

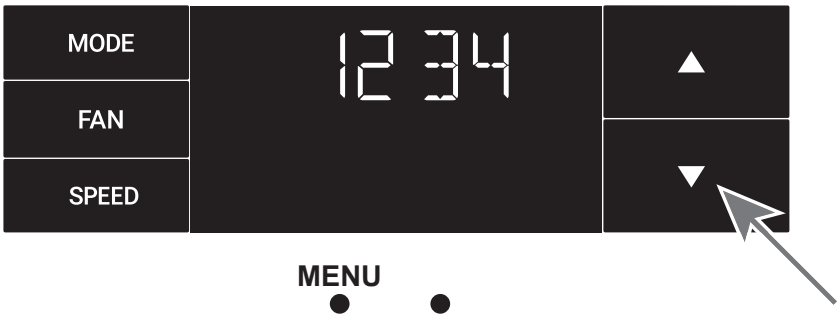

Figure 43

Figure 44

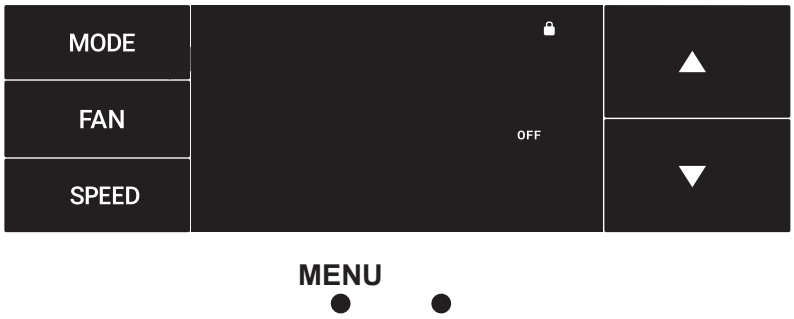

Control Panel Operation

The CnCT Menu

This menu is used to turn on Wi-Fi connection.

This is the CnCT menu. Pressing the leftmost button will activate Wi-Fi. See Figure 45.

The Wi-Fi symbol in the top right corner of the display shows Wi-Fi connection is on. See Figure 46.

Figure 45

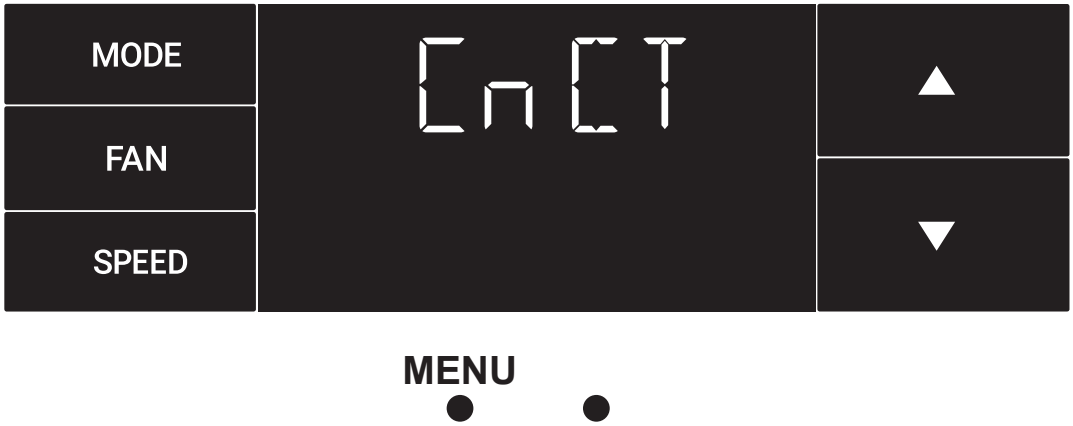

Figure 46

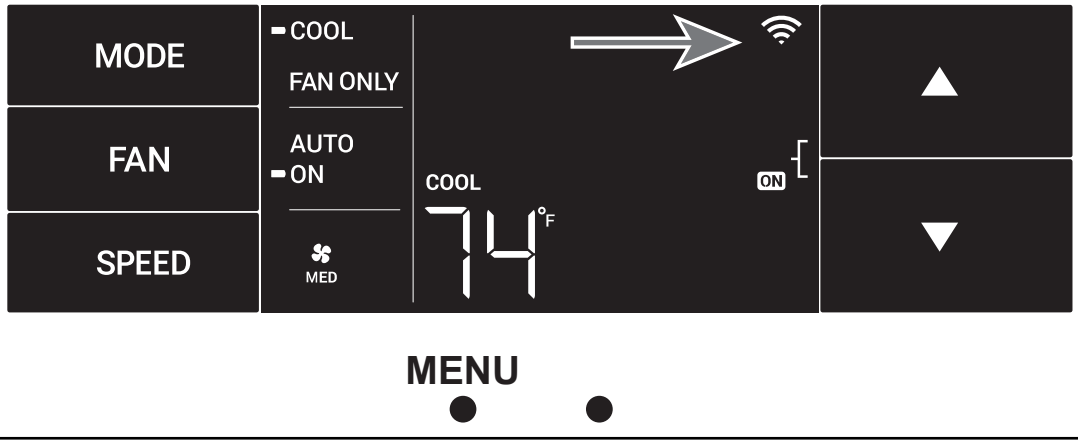

Control Panel Operation

The diAG Menu

This menu is used to access the diagnostic codes. See Figure 47.

Selecting this sub-menu shows the E that represents “Error.”
See Figure 48.

Toggle through the error codes using the arrow keys. See Figure 49.

Figure 47

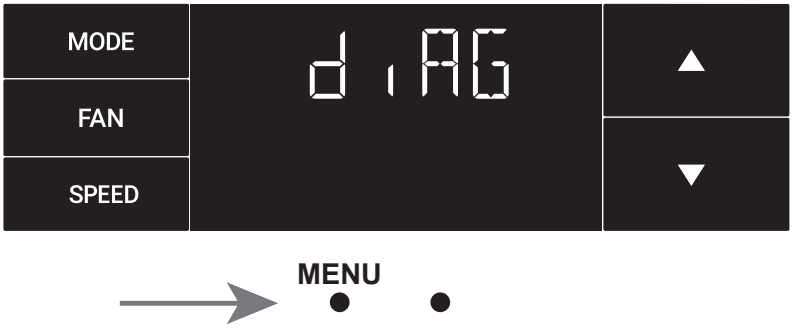

Figure 48

Figure 49

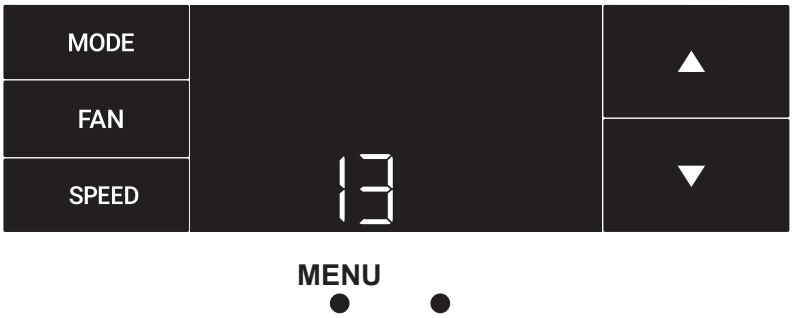

New Kühl Control Options

The new Kühl gives you a variety of options for control, programming, and scheduling including wireless capabilities.

Wireless Programming and Control:

Friedrich Connect allows you to conveniently control, program, and monitor your air conditioning unit remotely from a smartphone or computer.

Pre-Programmed Timer Options:

Your unit's digital control comes equipped with a 24-hour timer.

24-Hour Timer

The 24-hour timer allows you to set 2 temperature changes at pre-set times or a unit control panel.

Customizable Programming Options:

Customizable timers, with up to four temperature adjustments per day, can be set using Friedrich Connect for one or multiple units.

See www.friedrich.com for complete details on Friedrich Connect.

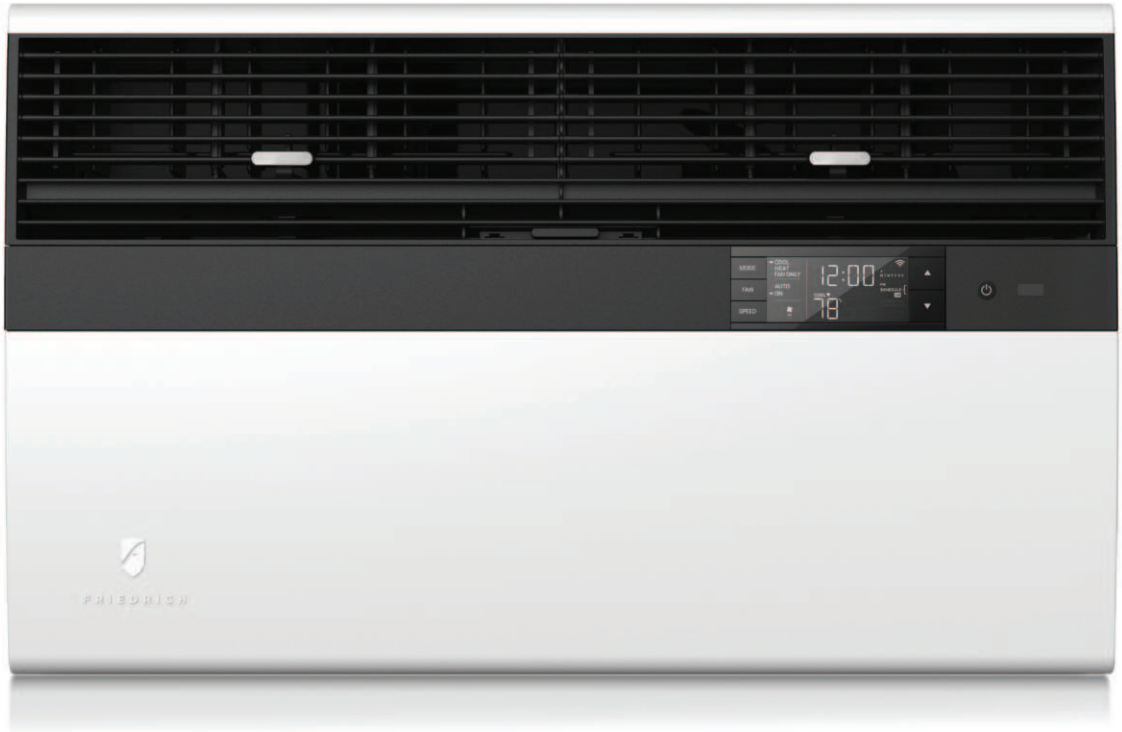

Wi-Fi Set-Up Instructions

Accessing Sub-Menus:

Below are the set-up instructions for Wi-Fi to use your unit wirelessly.

Follow the instructions below:

STEP 1. Using a mobile device such as a smartphone or laptop, navigate to www.FriedrichConnect.com.

STEP 2. Sign-in using your username and password.

STEP 3. Click the “Add Device” button.

STEP 4. Select the time zone the device is located in and click the “Next” button.

STEP 5. To start the setup process click the menu button on the home screen of your Kühl model.

STEP 6. Using the up and down arrows, navigate to the CnCT screen (Figure 50).

STEP 7. Click the menu button, this will begin the setup process for your Friedrich Connect enabled device.

STEP 8. Click the “Next” button on your mobile device.

STEP 9. Follow the on-screen steps to finish adding the device to your account.

Figure 50

Figure 51

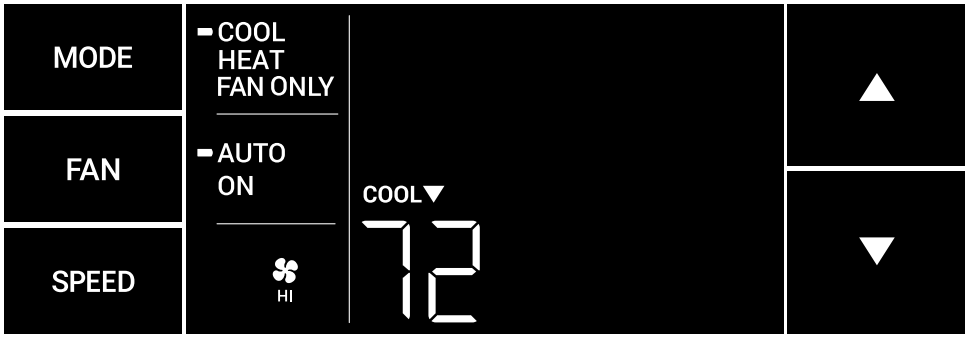

Control Panel Operation Instructions

SYSTEM - The **MODE** button allows you to sequentially select up to four modes of operation:

AUTO	Available on select models
COOL	
HEAT	Available on select models
FAN ONLY	

AUTO FAN (No Cooling Demand)

When in **AUTO** mode, the fan only operates when the system has a demand to cool or heat the room.

In the **ON** fan mode, the fan operates all the time. The system periodically cools or heats the fan's airflow but the flow of air does not stop.

UP and DOWN Arrows - Pressing either an **UP** or **DOWN** button changes the system's setpoint (desired room temperature). These buttons are also used to make system parameter changes later in this manual.

One press equals 1 degree of change in Fahrenheit mode. One press equals 0.5 degree change in Celsius mode.

TIMER

The timer can be engaged or disengaged from the control panel. This is done by pressing or holding the **UP** and **DOWN** arrows simultaneously for three seconds.

OTHER FUNCTIONS

°F – °C Select

To switch from degrees Fahrenheit (F) to Celsius (C), press the **MENU** button and enter the **F-C** sub-menu.

FAN SPEED - Depending on your model, the **FAN SPEED** button allows you to toggle between three or four modes of operation: LOW, MEDIUM, HIGH and MAX.

Alerts

When the filter needs to be cleaned or replaced, the **CHECK FILTER** icon displays.

The alert can be dismissed by holding the **FAN** and **SPEED** for 3 seconds.

Lock Control Panel

To lock/unlock the front panel controls, navigate to the "**LOCK**" sub-menu found after clicking the **MENU** button. The lock requires a four digit pass code to lock/unlock the unit. This pass code will be required to enter the menu to unlock the unit. The **LOCK** icon illuminates to indicate the locked status.

The **LOCK** icon disappears to indicate unlocked status.

External Control Status

The **Wi-Fi** icon illuminates to indicate that the system is receiving a Wi-Fi connection. The **Wi-Fi** icon also provides information about the signal strength.

ADVANCED FUNCTIONS

The functions mentioned in the following section may or may not be available depending on the air conditioner model.

Modify the TIMER Function

Navigate to the TIME menu to set the timer.

Remote Control Operation

Remote Control - Refer to Figure 52 during operation description.

Getting Started - Install two (2) AAA batteries in the battery compartment located on the back of the unit.

Operation - The remote control should be within 25 feet of the air conditioner for operation (refer to Figure 52 for effectiveness). Press the power button to turn the remote on. The remote will automatically power off after 15 seconds if the buttons are not being pressed. The remote must be on to control the unit.

POWER Button - Turns remote and unit on and off.

SYSTEM Button - Allows the user to sequentially select the following: **AUTO**, **COOL**, **HEAT**, and **FAN ONLY** operations. When the button is pressed, the display indicates which mode has been selected via a display message. Note that when the heating function is not available, the system will automatically skip the HEAT mode.

FAN MODE Button - Selects between automatic (**AUTO FAN**) or **CONTINUOUS** operation. In the **AUTO FAN** mode, the fan only turns on and off when the compressor operates or the heat function is enabled.

NOTE: **AUTO FAN** is not available in the FAN ONLY Mode, the display indicates **CONTINUOUS**. In the **CONTINUOUS** mode, fan speed is determined by your selection on the **FAN SPEED** button.

FAN SPEED Button - Used to sequentially select new fan speed, plus AUTO operation. When the **FAN SPEED** button is pressed, the fan speed icon (triangle) changes to indicate the new speed level. Fan speed automatically varies depending on the set temperature on the control panel and the actual room temperature. For example, if there is a big difference between your set temperature and the actual room temperature, the system fan speed increases to HIGH. It remains at this speed until the room temperature matches the set temperature.

UP and DOWN Arrows - Pressing either the **UP** or **DOWN** button changes the desired room temperature. The factory preset lower and upper limits are 60 °F (16 °C) and 99 °F (37 °C). These buttons are also used to navigate between function options when using the User Menu or Maintenance Mode.

Remote Effectiveness

Handheld Remote - Has an operating range of up to 25 ft. The infrared remote control signal must have a clear path to transmit the command to the air conditioning unit. The remote signal has some ability to “bounce” off of walls and furniture similar to a television remote control. The diagram below shows the typical operating range of the control in a standard room with 8 ft high ceilings.

Figure 52

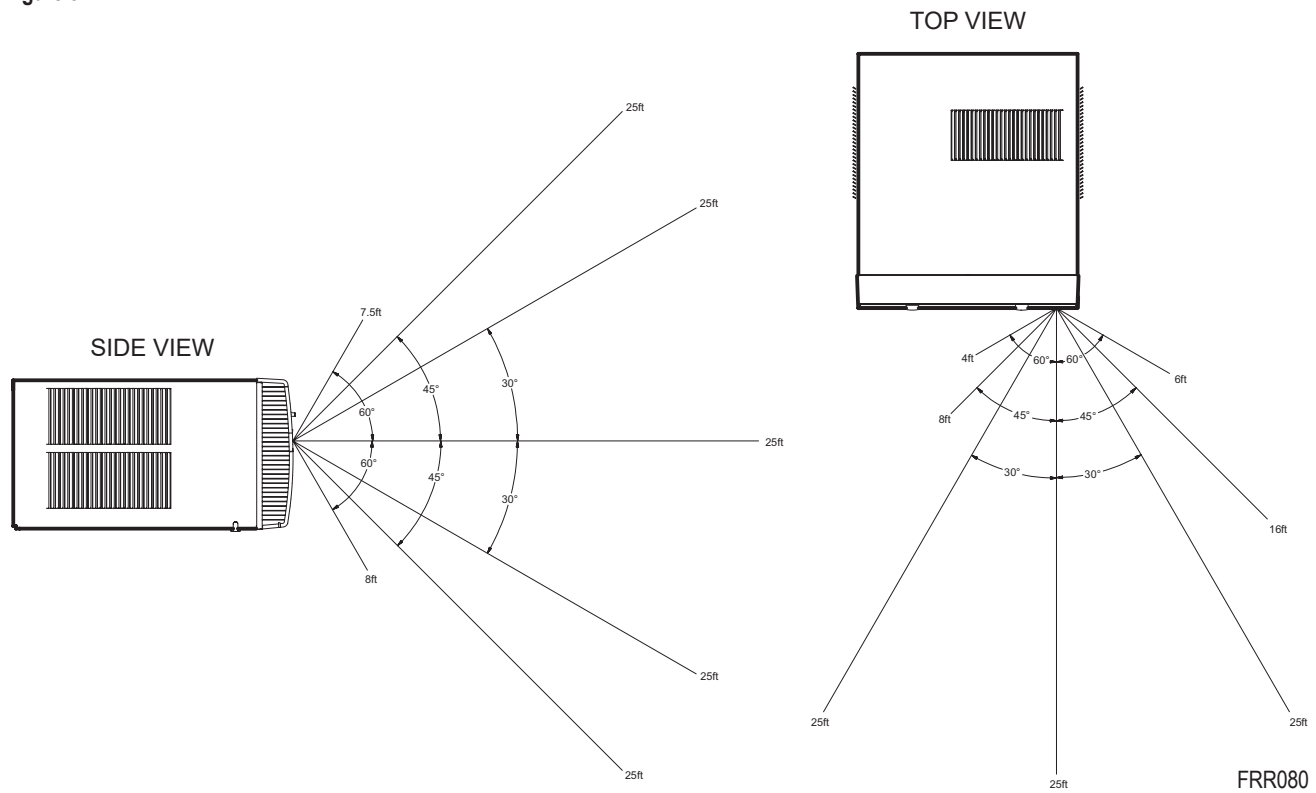

Airflow Selection and Adjustment

Airflow direction adjustment

The airflow path may be adjusted to distribute air independently from the left or right side of the discharge opening. Each of the banks of louvers can be directed left, right, up, or down in order to achieve the most optimum airflow positioning.

To adjust airflow direction, grab the lever in the center of the louver bank and move it in the direction that you would like the air to be directed. Please note that it is normal that airflow may be stronger out of one side of the louvers than the other.

Fresh air and exhaust control

Your air conditioner has the ability to bring fresh air into the room or exhaust stale air out of the room. The control slide is found on the upper part of the unit (see Figure 53).

TO BRING IN FRESH AIR – Move the lever to the ***Fresh Air*** position which allows outside air to enter the room. This is useful in fall and spring as a means of bringing in fresh outside air when using FAN ONLY. It can also be used in the summer with the compressor in the Cooling Mode if you wish.

TO EXHAUST INDOOR AIR – Move the lever to the ***Exhaust*** position. This will allow stale air to be expelled to the outside of the dwelling. This is especially handy in the spring or fall when indoor air tends to get stale, or after a social gathering involving smokers, or to remove cooking odors.

BEST PERFORMANCE – Move the lever to the ***Re-Circulate Position***. This is the most efficient mode for cooling and heating.

Figure 53

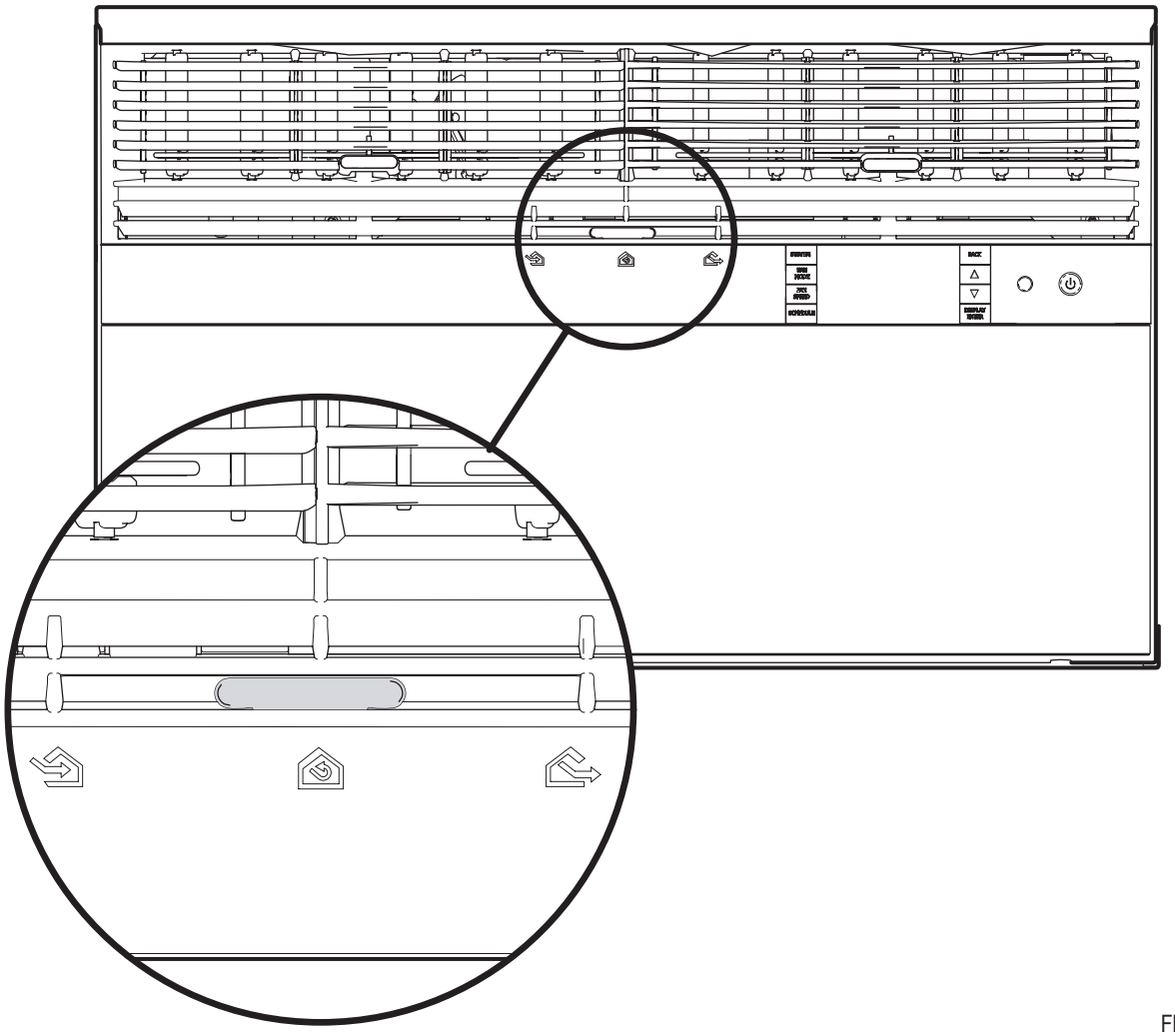

FRR008

Installation Instructions

READ THIS FIRST! Electrical Requirements

⚠ WARNING

Electrical Shock Hazard

Make sure your electrical receptacle has the same configuration as your air conditioner's plug. If different, consult a Licensed Electrician.

Do not use plug adapters.
Do not use an extension cord.
Do not remove ground prong.

Always plug into a grounded 3 prong outlet. Failure to follow these instructions can result in death, fire, or electrical shock.

IMPORTANT: Before you begin the actual installation of your air conditioner, check your local electrical codes and the information below. Your air conditioner must be connected to a power source with the same alternating current (A.C.) voltage and amperage as marked on the name plate located on the chassis. Only A.C. can be used. Direct Current (D.C.) cannot be used.

CIRCUIT PROTECTION – Use on single outlet circuit only. An overloaded circuit will invariably cause malfunction or failure of an air conditioner; therefore, it is necessary that the electrical protection is adequate. Due to momentary high current demand when the air conditioner starts, use a "TIME DELAY" fuse or a HACR type circuit breaker. Consult your dealer or power company if in doubt.

Refer to the electrical name plate located on the air conditioner chassis (see Page 2) to determine the correct fuse or circuit breaker amperage for your model (see Table 1 on Page 6 for electrical receptacle types).

The power cord has a plug with a grounding prong and a matching receptacle is required.

The following instructions are for standard chassis model groups distinguished by the first three letters of the model designations cabinet sizes listed in Table 2.

Table 2

MODEL DESIGNATION	CABINET SIZE (H x W x D)
SMALL CHASSIS – KCS, KES, KHS	15 15/16" x 25 15/16" x 29" (405 mm x 660 mm x 737 mm)
MEDIUM CHASSIS – KCM, KEM, KHM	17 15/16" x 25 15/16" x 29" (455 mm x 660 mm x 737 mm)
LARGE CHASSIS – KCL, KEL, KHL	20 3/16" x 28" x 35 1/2" (513 mm x 711 mm x 851 mm)

⚠ WARNING

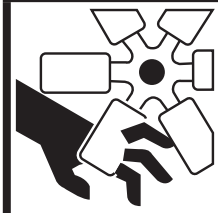

MOVING PARTS HAZARDS

- Do not operate unit out of sleeve or with front grille removed.
- Do not place hands in blower or fan blade areas.

Failure to do so can result in serious injury.

⚠ CAUTION

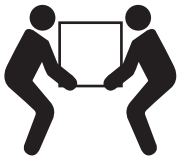

Excessive Weight Hazard

Use two or more people when installing your air conditioner.

Failure to do so can result in back or other injury.

Recommended Tools

1. Power Drill
2. 5/32" Drill Bit
3. Gloves
4. Carpenters Level
5. 5/16" Wrench
6. 1/4" Wrench
7. #2 Phillips Screw Driver
8. Putty Knife or (wood stir stick)

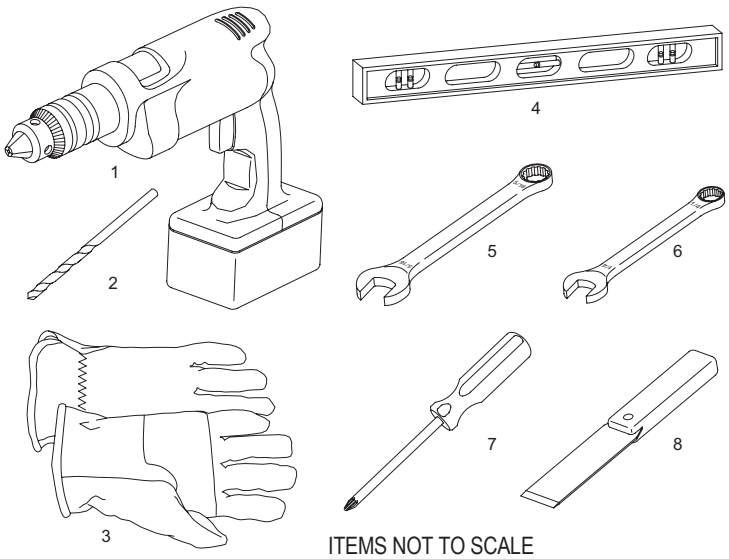

ITEMS NOT TO SCALE

Installation Hardware and Accessory Details

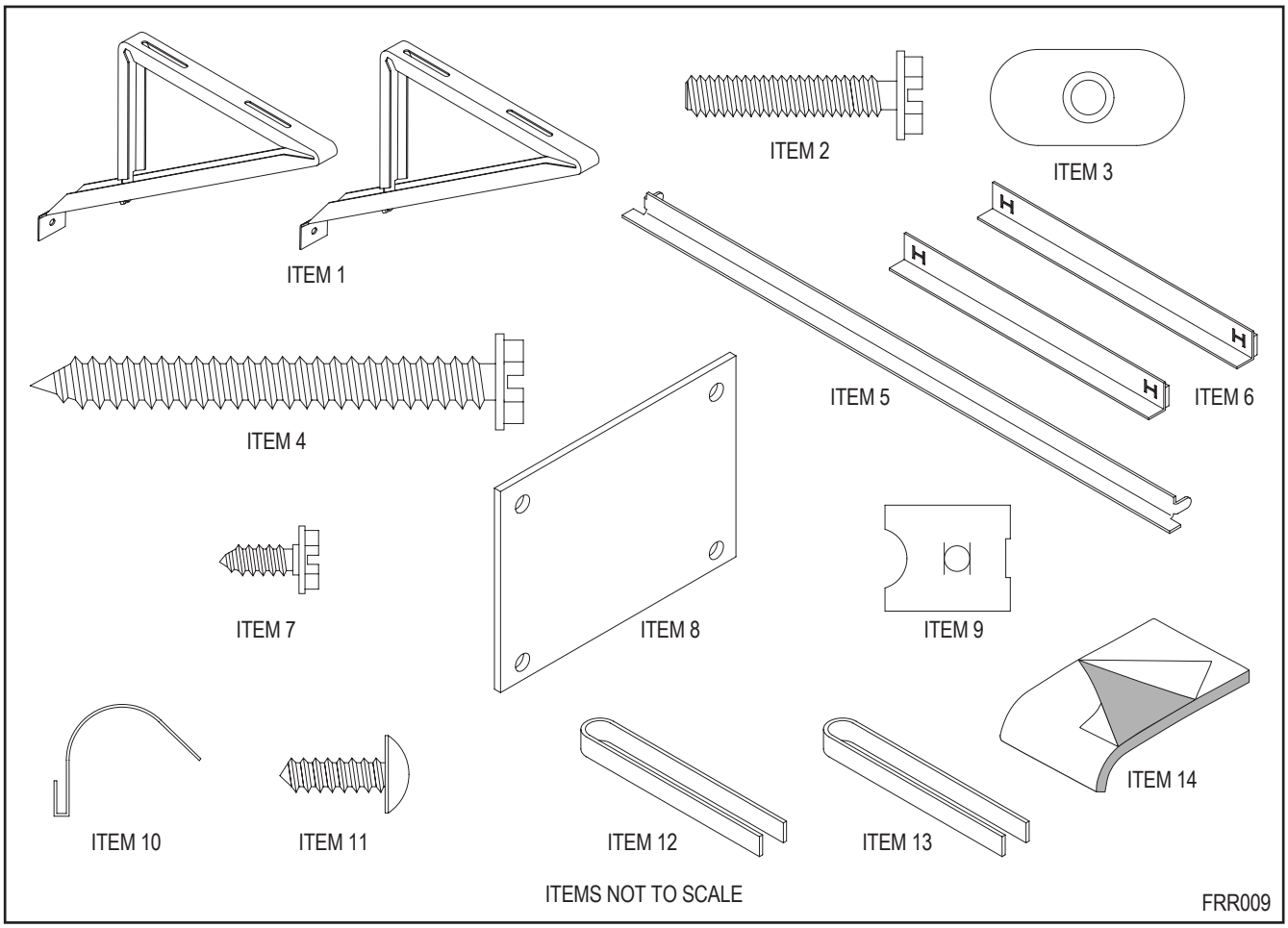

Window Mount Installation Hardware		
ITEM NO	**DESCRIPTION**	**QTY.**
	WINGBOARD MOUNTING PARTS	
8	WINGBOARD (MASONITE)	1
9	"J" TYPE SPEED NUT	4
10	WINGBOARD CLIP (SPRING STEEL)	4
11	SCREW, #8 x ½" PHILLIPS TRUSS HD.	4
	WINDOW SEALING	
12	WINDOW SEAL GASKET (DARK FOAM)	1
13	CHASSIS SEAL GASKET (LIGHT FOAM)	1
	SHELL MOUNTING PARTS	
1	SUPPORT BRACKET	2
2	SCREW, 10-24 x 1" HEX HEAD	4
3	10-24 FLAT WELD NUT	4
4	SCREW, SHEET METAL #12 x 2"	7
	WINGBOARD ANGLE MOUNTING	
5	WINGBOARD ANGLE, TOP	1
6	WINGBOARD ANGLE, SIDE	2
7	SCREW, SHEET METAL #8 x 3/8"	2

Thru-the-Wall Installation Hardware		
ITEM NO	**DESCRIPTION**	**QTY.**
	MOUNTING PARTS	
4	SCREW, SHEET METAL #12A x 2"	7
14	CHASSIS SEAL GASKET (LIGHT FOAM)	1

NOTE: Kühl + models do not come with window mounting components. When mounting a cooling and heating model, a window installation kit must be purchased separately.

KWIKS – For all KES and KH models.

KWIKM – For all KEM and KHM models.

KWIKL – For all KEL and KHL models.

Standard Window Installation

NOTE: Hardware and accessories used during installation are shown on Page 28. Each part will be referred as "Item No."

STEP 1. Remove the chassis EntryGard™ retainer by removing the far right screw (see Figure 54). Save this screw to reattach the chassis retainer after installation (Step 12). Also, remove and discard the two retainer screws and washer located at the rear of the unit (see Figure 54).

⚠ CAUTION

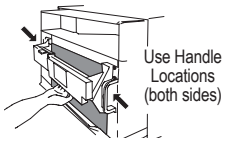

Handle Use

Use handle on both sides to pull unit from sleeve.

Do not push, pull, or lift from center of support.

STEP 2. Hold the cabinet stationary. Then, use the hand grips on both ends of the control unit support bracket to pull the chassis out of the cabinet (see Figure 55).

STEP 3. Remove the large white foam blocks used to restrain the compressor during shipment (see Figure 56). Inspect base pan for dislodged white foam blocks and remove. Do not remove any other foam parts.

Figure 55

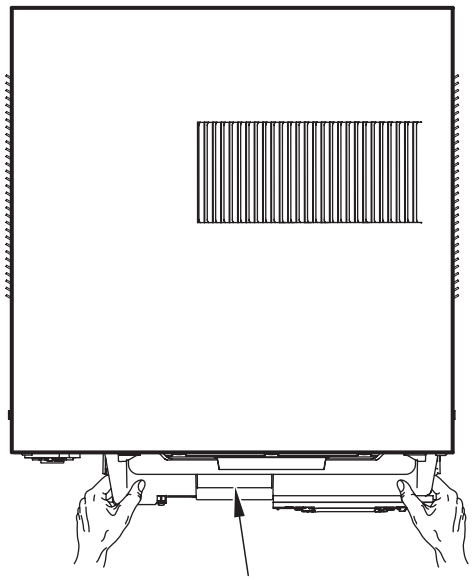

STEP 4. Anchor the side angles (Item 6) by engaging the tabs of the lower sill plate (see Figure 57, Detail B-2) with the loops of the side angle. Engage the tabs of the top angle (Item 5) with the top loops of the side angle (see Figure 57, Detail B-1). Install two (2) screws (Item 7) to secure the top angle tabs and the side angle to cabinet (see Figure 57, Detail B-1).

Figure 54

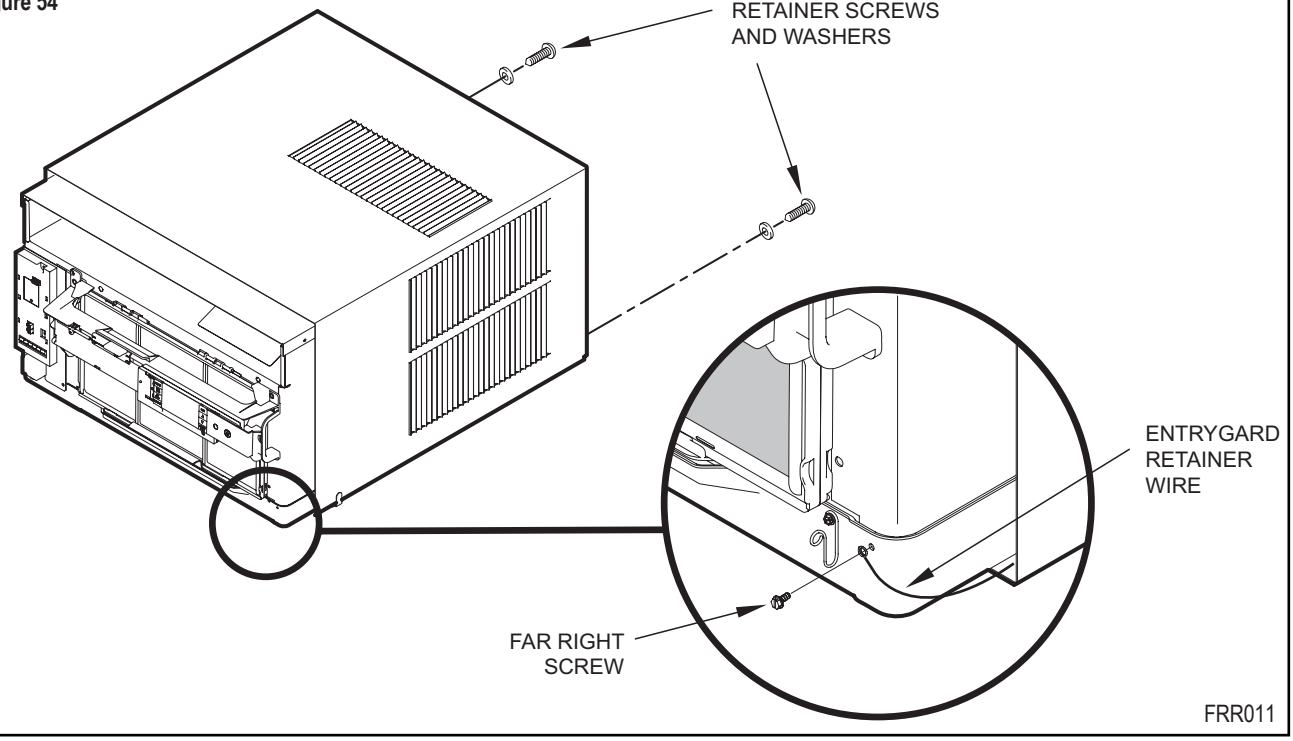

Standard Window Installation continued

⚠ CAUTION

Remove Shipping Blocks
Prior to operating the unit remove the foam shipping blocks.

Failure to do so may result in damage to the unit which is not covered by the manufacturer's warranty!

STEP 5. Check the window sill and frame to be sure they are in good condition and functioning.

STEP 6. **CABINET MOUNTING** – Raise the lower window 1/4" more than the height of the cabinet. Carefully slide the cabinet through the opening until the lower sill plate channel rests behind the window sill and the top angle rests against the window (see Figure 58). Center the cabinet within the opening. Drill three (3) 5/32" diameter pilot holes into window sill using the holes in the cabinet sill plate as a guide. Install three (3) #12 x 2" long screws (Item 4) (see Figure 58).

STEP 7. **OUTSIDE SUPPORT MOUNTING** – Refer to Figures 57 and 58. Assemble the support brackets (Item 1) to the bottom of the cabinet with four (4) 10-24 1" long screws (Item 2) and four 10-24 flat nuts (Item 3). Adjust the support brackets, using a combination of the elongated holes of the bracket and different hole locations in the cabinet, to bring the bottom support bracket pads in contact with the wall. A 1" x 4" or 2" x 4" SPACER SHOULD BE USED BETWEEN THE WALL AND SUPPORT THE BRACKETS WHEN INSTALLED ON ALUMINUM OR VINYL SIDING. Drill 5/32" diameter pilot holes and secure the brackets to the wall with two (2) 12A x 2" long screws (Item 4).

NOTE: DO NOT LEVEL the cabinet from front-to-back. Make sure there is approximately a 3/8" to 1/2" slope (1/8 to 1/4 bubble on level) toward the outside of the house.

Adjust the support brackets to provide an inside-to-outside slope for excess condensation drainage (refer to Standard Window Installation, Figures 59 through 61). Tighten all screws.

Alternate support method A: If you have a deep window sill which prevents you from mounting the brackets as shown in Figure 61, try the following: Using the elongated holes and different hole locations in the cabinet, set the placement of the bracket to support the unit's weight (Figure 62). Tighten all screws.

Alternate support method B: If the window ledge gap is narrow, try the following. Bend the bracket end tab flat. Cut the bracket in two (2) places as shown in Figure 63. Bend the short piece so it will be vertical when installed. Adjust the placement as required. Tighten all screws.

STEP 8. Measure and cut the wingboard panels (fit with about 1/8" clearance) from the supplied Masonite (Item 8) to fit the space between the window side channels and cabinet (Figure 64). Make sure you include the depth of the window channel.

NOTICE

For YOUR security and safety, YOU must provide a means of preventing the upper part of the window from opening.

STEP 9. To assemble the wingboard panels, push on the "J" type speed nuts (Item 9) and spring steel clips (Item 10) (see Figure 65 on Page 35). Secure each panel with two (2) screws (Item 11). Refer to Figure 66 on Page 36.

Figure 56

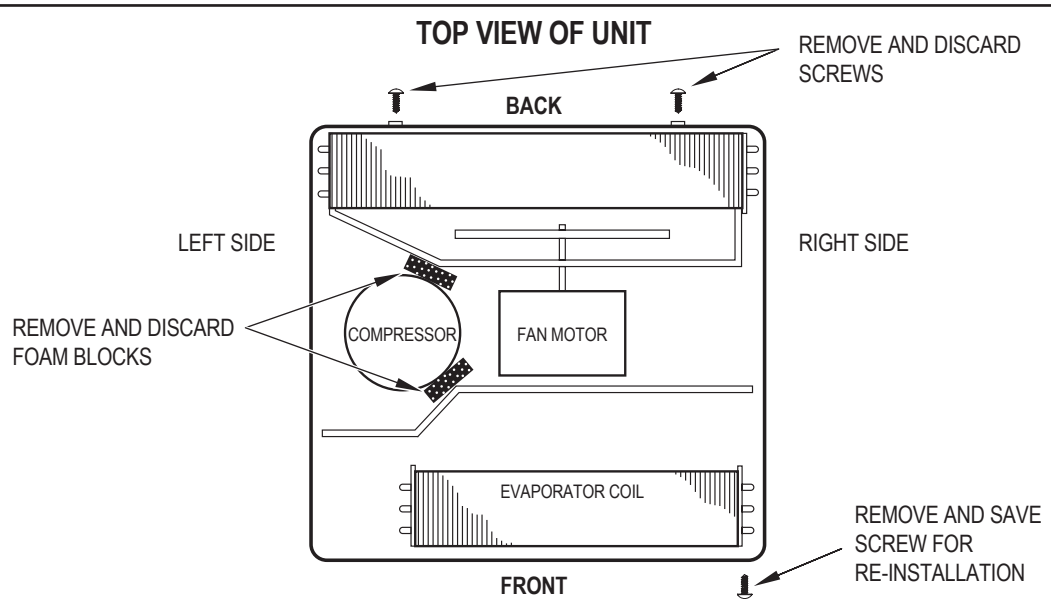

Standard Window Installation continued

Figure 57

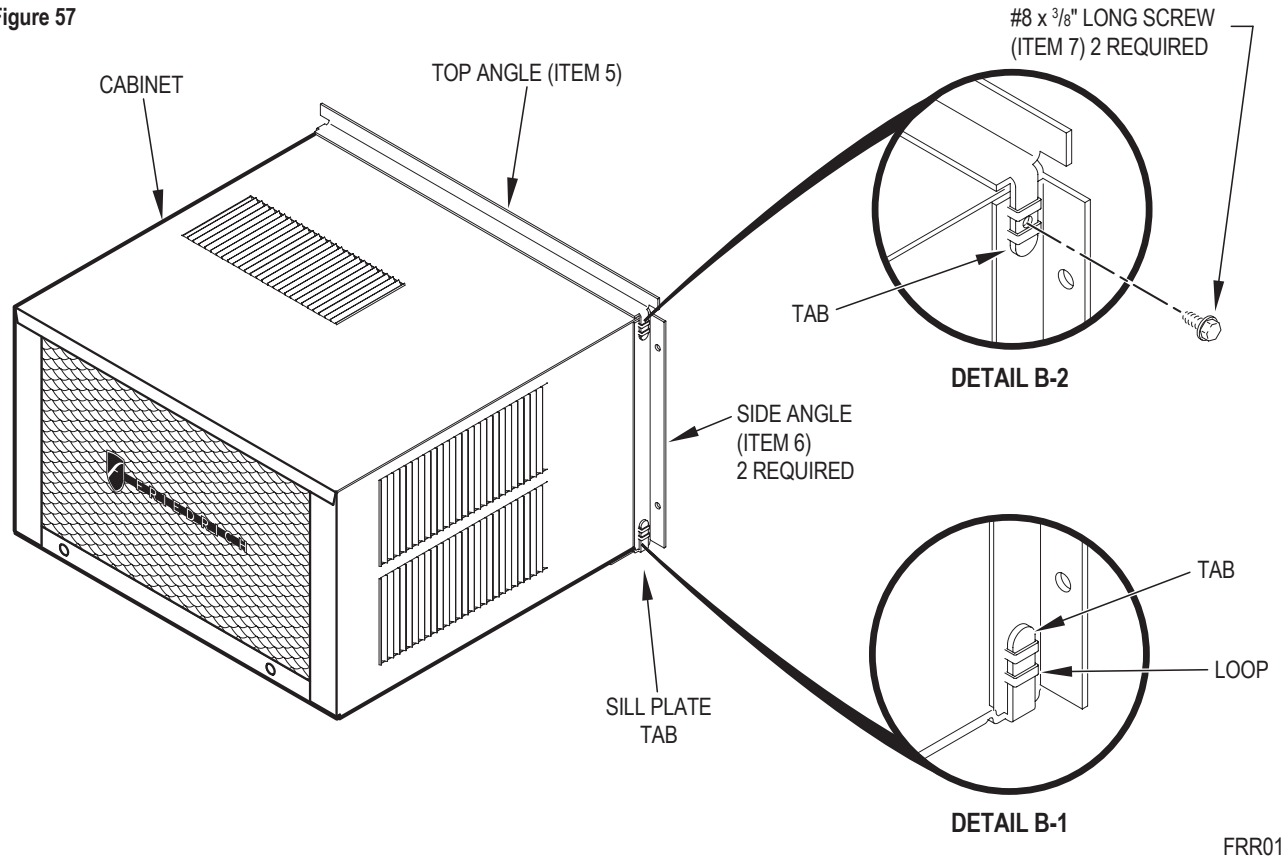

Figure 58

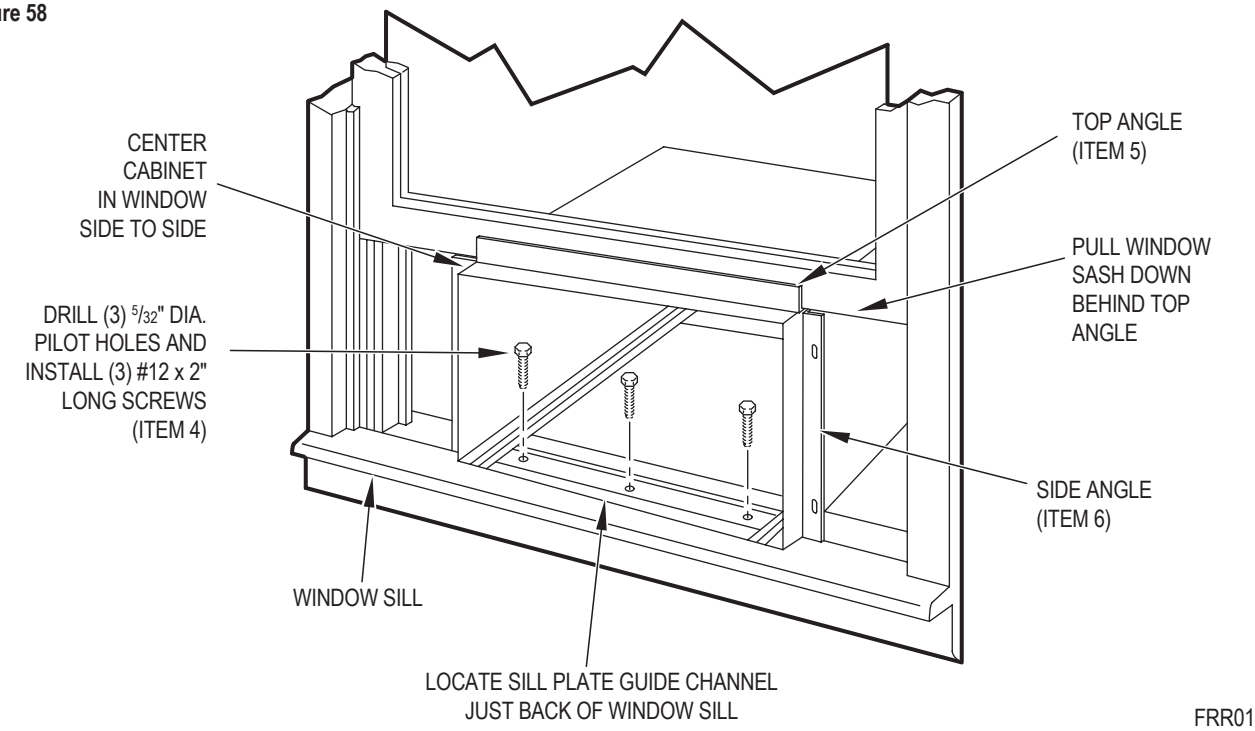

Standard Window Installation continued

Figure 59

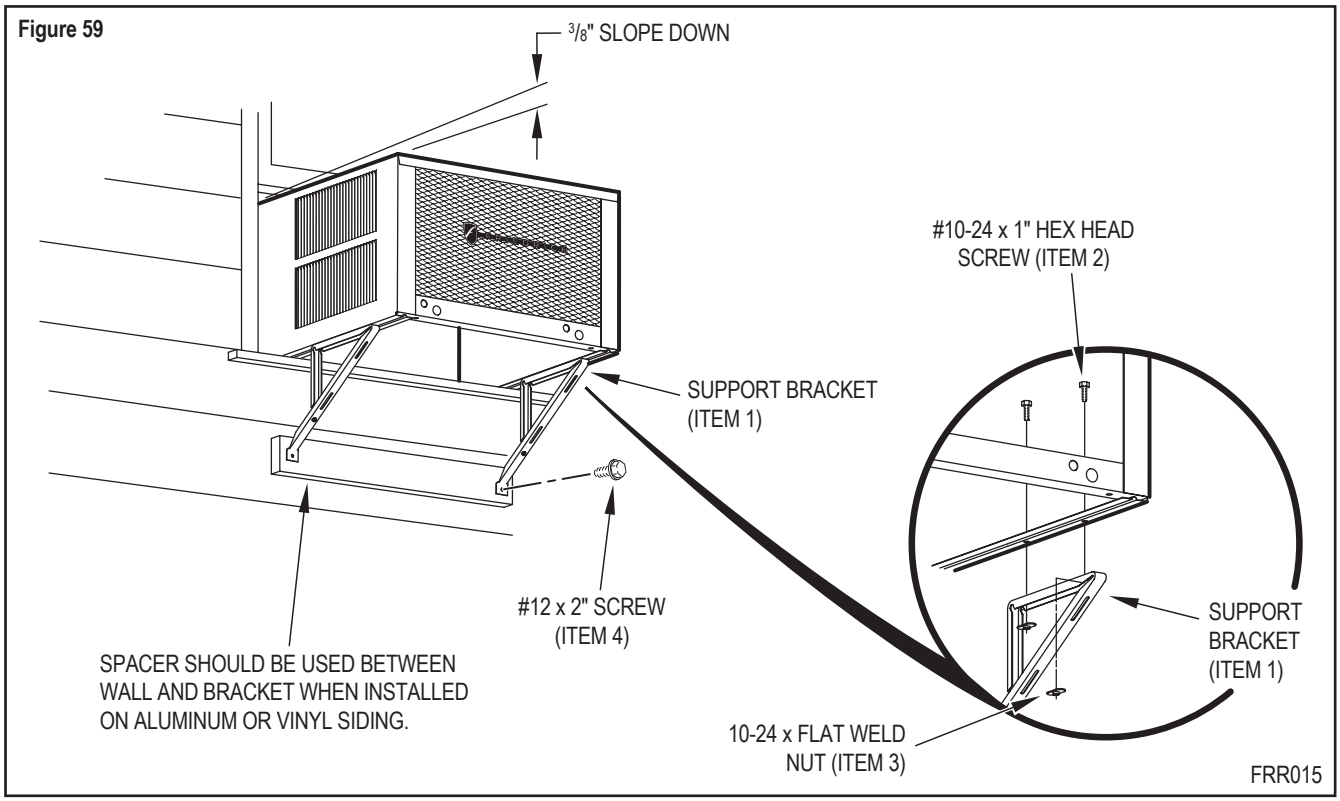

Figure 60

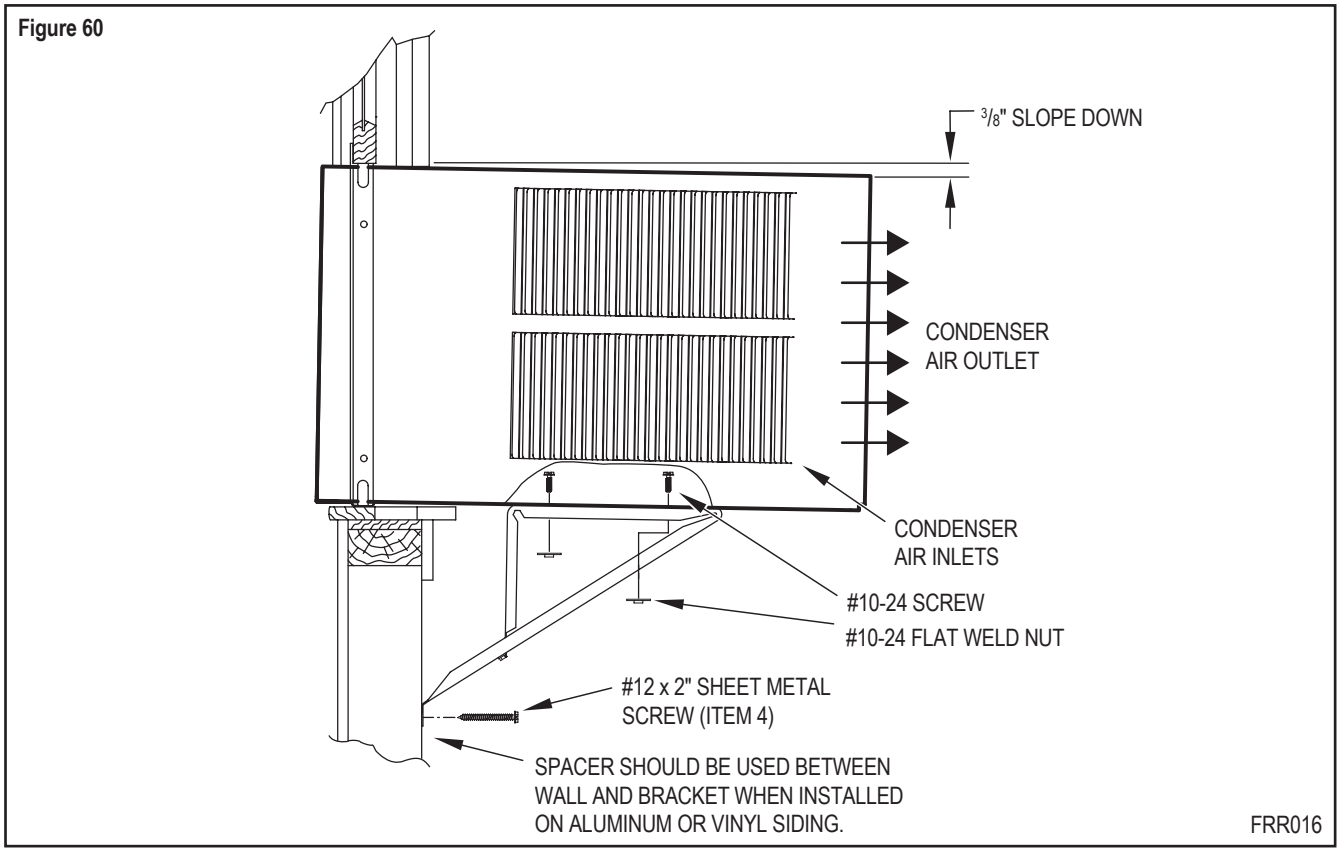

Standard Window Installation continued

Figure 61

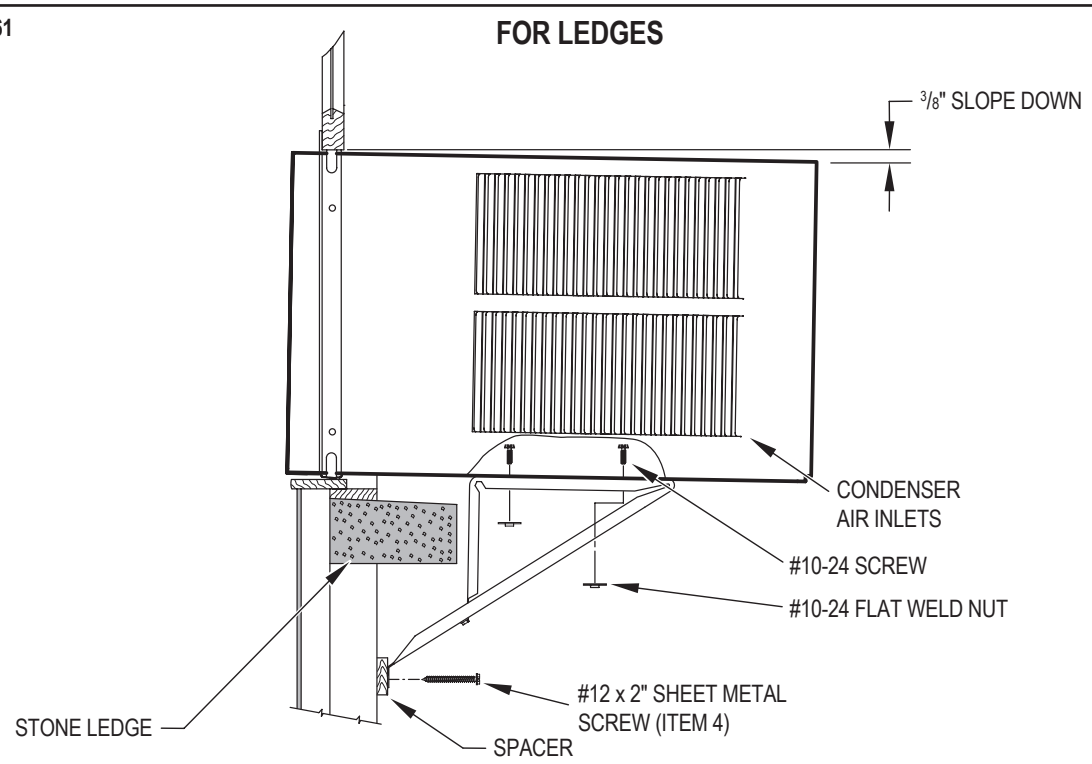

Figure 62

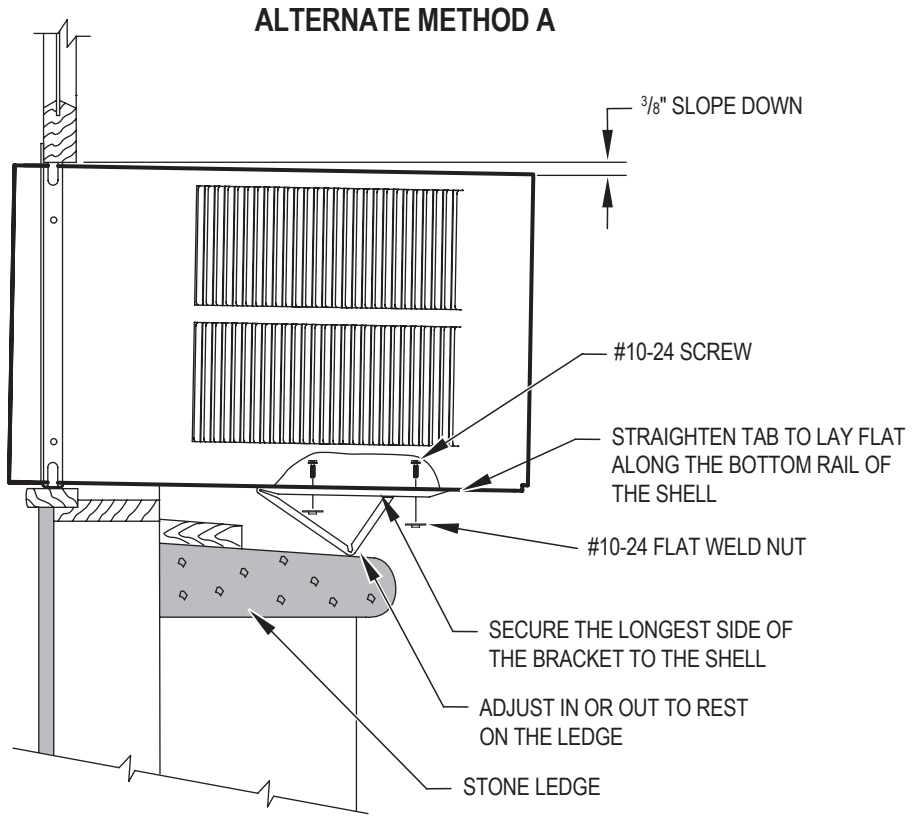

Standard Window Installation continued

Figure 63

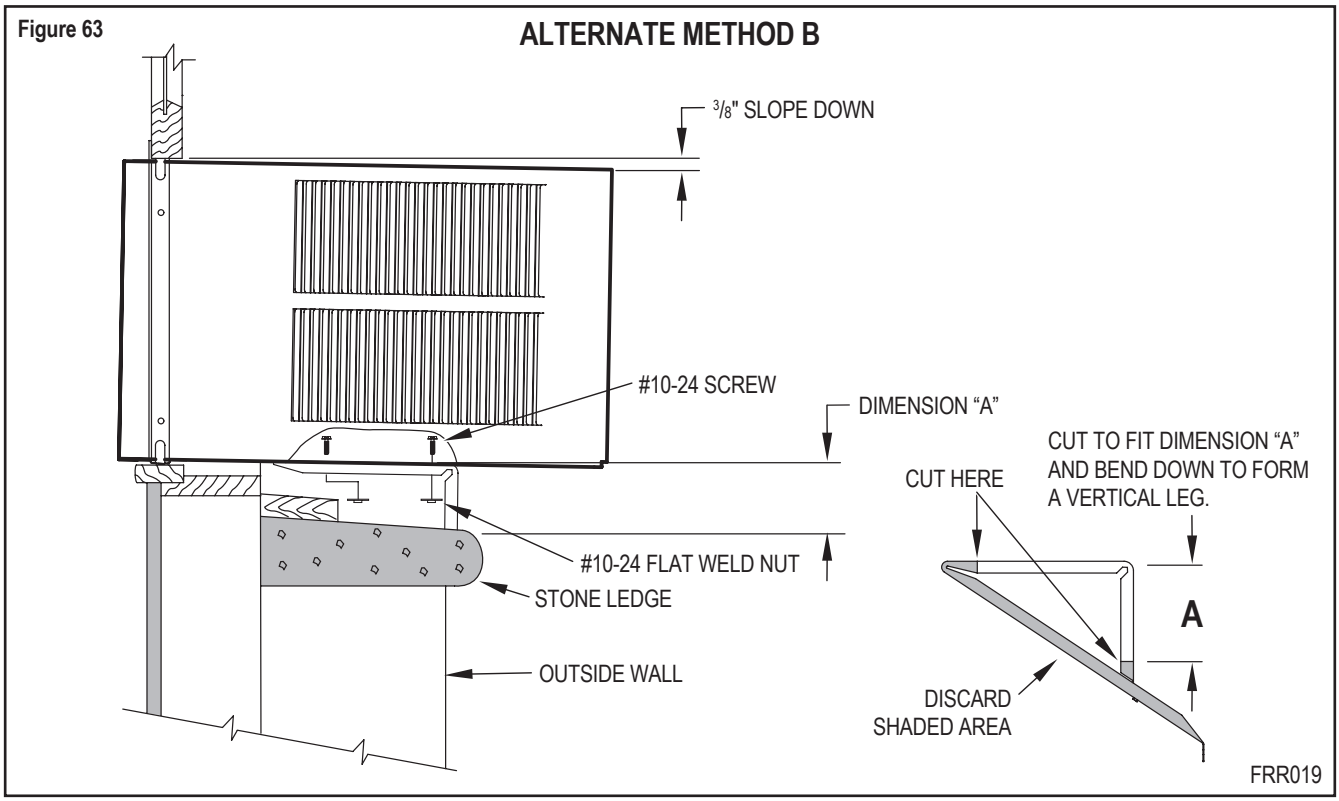

Figure 64

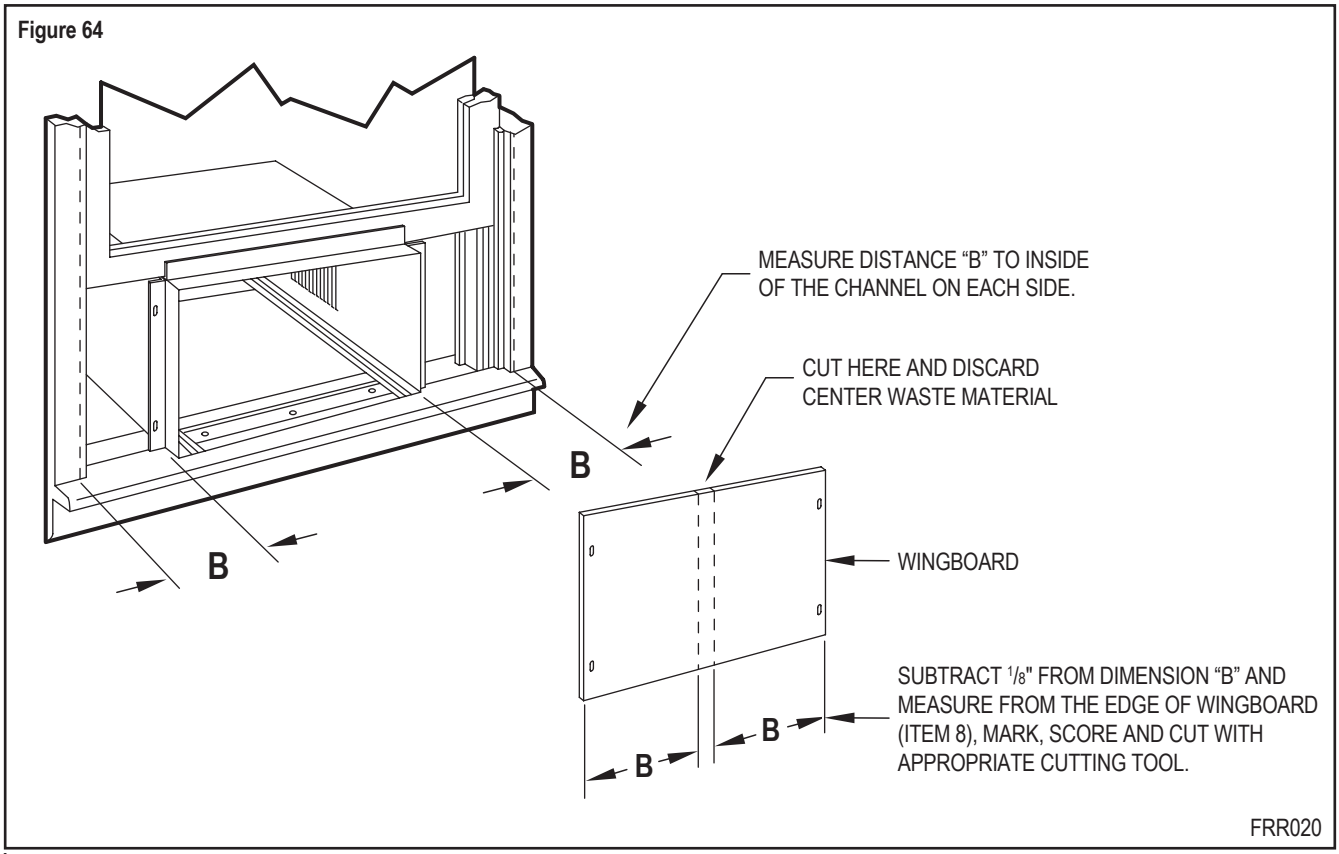

Standard Window Installation continued

⚠ WARNING

Falling Object Hazard

Not following Installation Instructions for mounting your air conditioner can result in property damage, injury, or death.

⚠ CAUTION

Cut/Sever

Although great care has been taken to minimize sharp edges in the construction of your unit, use gloves or other hand protection when handling unit

Failure to do so can result in minor to moderate personal injury.

STEP 10. INSTALL THE R1 INSULATION PANEL – To minimize air leaks and ensure optimal insulation, install the included R1 insulation panel (14 in parts list) (see Figure 67A-C).

First, measure the width from one side of the cabinet/ sleeve (covering the side angles where the wingboard was just secured) to the end of the wingboard (see Figure 67A).

Next, cut the R1 insulation panel to the measured width and remove protective cover, exposing adhesive on back panel (see Figure 67B).

Last, evenly apply the adhesive side of the panel across the entire height and width from side angle to wingboard panel (see Figure 67C).

Repeat the steps above for the other wingboard panel.

STEP 11. INSTALL THE WINDOW SEALING GASKETS – Measure and cut the dark foam window seal gasket (Item 12) and install it between the upper glass panel and the top part of the window sash (see Figure 67A).

STEP 12. Carefully team lift the chassis and set it into the cabinet. Slide the chassis stopping approximately 3" from full insertion. Insert the chassis seal gasket (Item 13) one inch deep between the chassis and the cabinet (see Figure 68) as shown on Page 37. A paint stir stick or ruler might be helpful here. Begin inserting the gasket at either bottom corner and go up the side, across the top, and down the opposite side. Then push the chassis all the way into the cabinet.

NOTE: If the chassis seal gasket is not installed or installed improperly, the operation of the unit will be negatively affected. Operational noise and outside noise will also amplified.

STEP 13. Reattach the EntryGard™ chassis and EntryGard™ retainer wire with the same screw retained in Step 1 (see Figure 54).

Figure 65

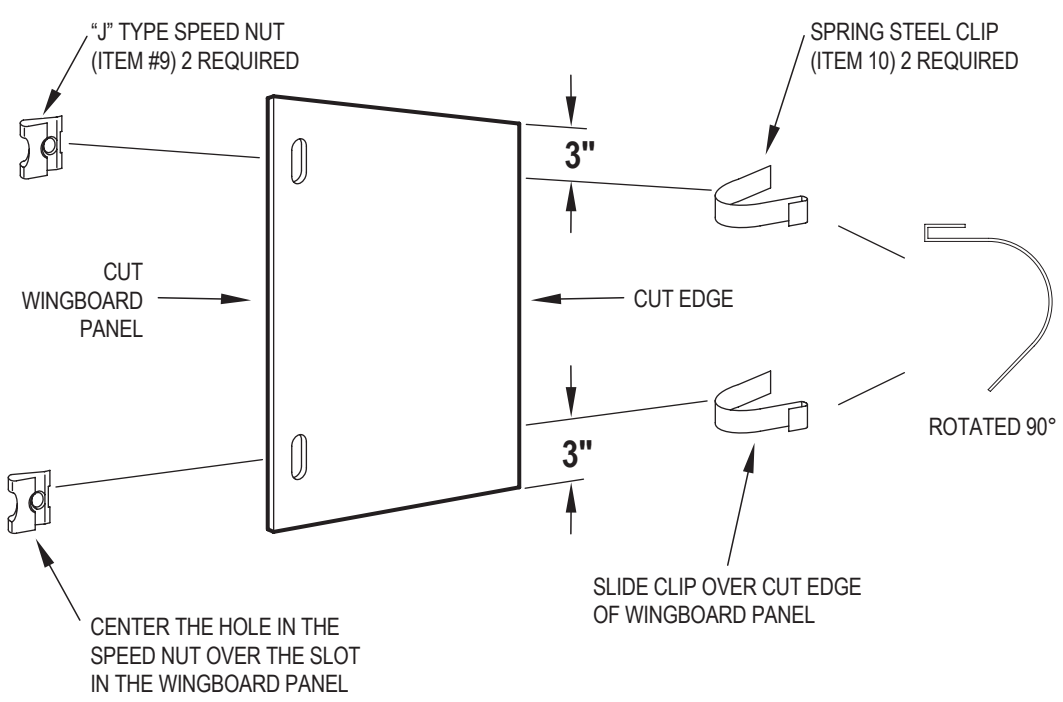

Standard Window Installation continued

Figure 66

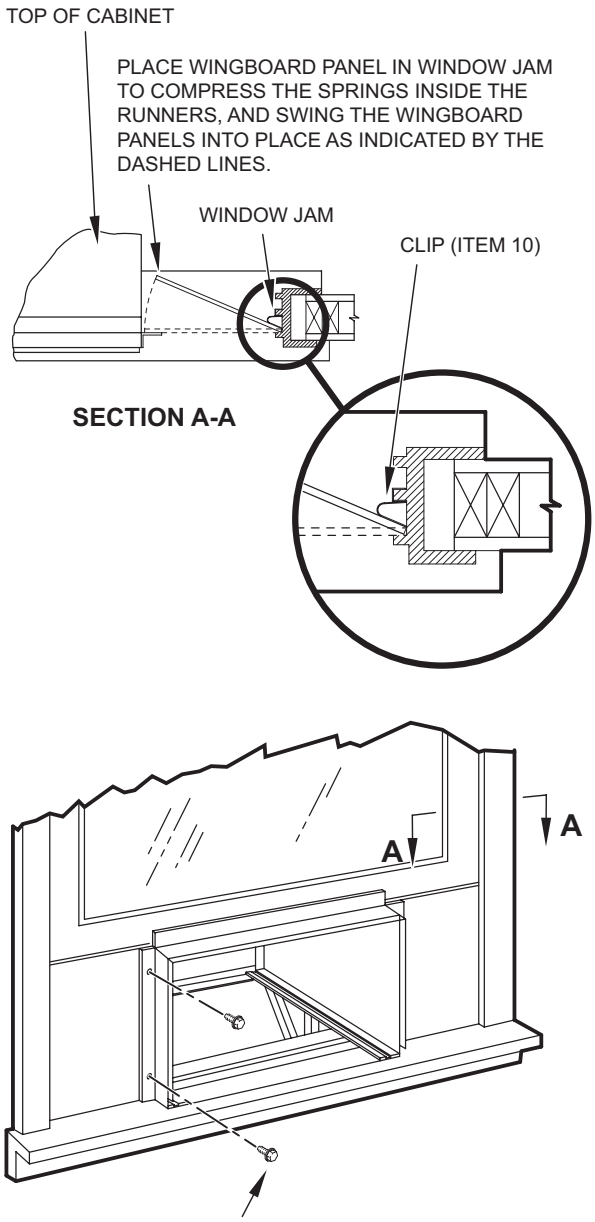

FRR022

Figure 67

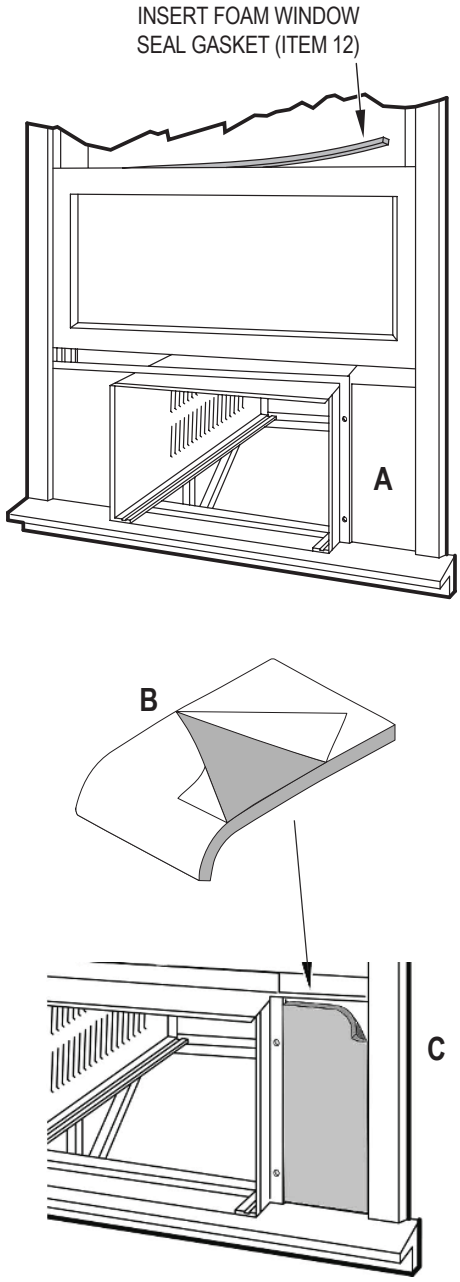

FRR023

Standard Window Installation continued

OPTIONAL: The factory assembles the supply cord so that it exits the left side of the unit at the bottom. At the consumer's discretion, pull the supply cord taut through the loops (refer to Cord Routing Change, Figure 70) and route the cord down.

STEP 14. To attach and prevent damage to the front grille, align the cord notch over the cord and center the fresh air lever, then align and tighten the four (4) captive screws as indicated by the arrows in Figure 69. Before closing the front panel, be sure the filter is in place. Make sure curtains do not block the side air intakes.

STEP 15. Refer to the Control Panel Operation section for instructions.

You are now to control the comfort level of the room.

Use Tool Provided

Please use the provided tool to attach the decorative front to the chassis.

Figure 69

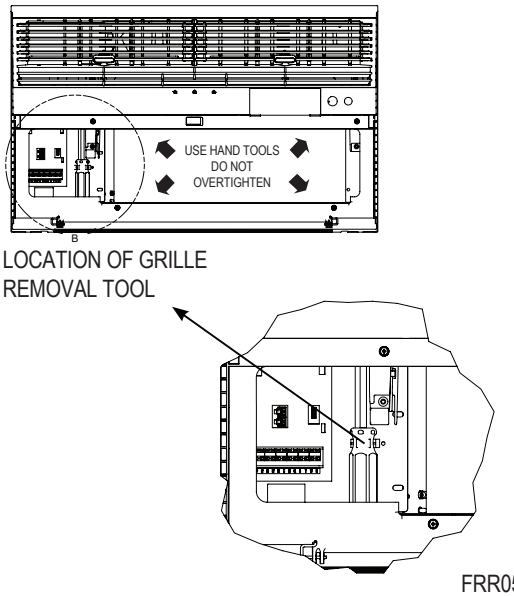

FRR053

Figure 68

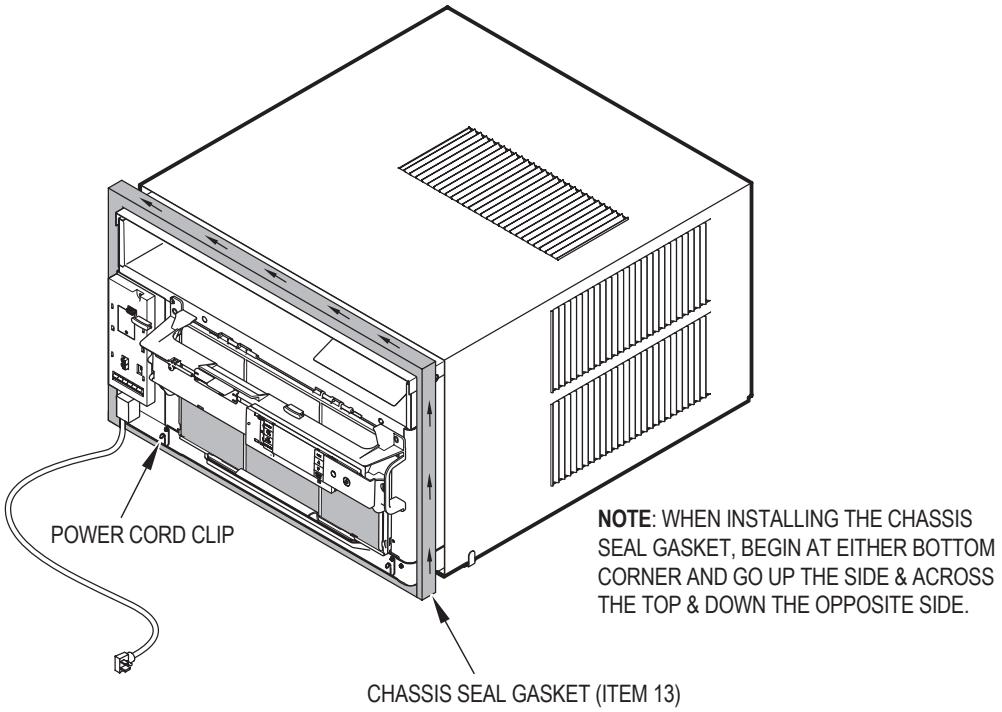

FRR024

Cord Routing Change

Unplug unit.

⚠ WARNING

Electrical Shock Hazard

Make sure your electrical receptacle has the same configuration as your air conditioner's plug. If different, consult a Licensed Electrician.

Do not use plug adapters.
Do not use an extension cord.
Do not remove ground prong.

Always plug into a grounded 3 prong oulet. Failure to follow these instructions can result in death, fire, or electrical shock.

For convenience and optimum appearance, the direction that the power cord exits the unit may be changed from left to right by following the procedure below. Select the exit location on the left or right based on proximity to the power outlet.

Figure 70

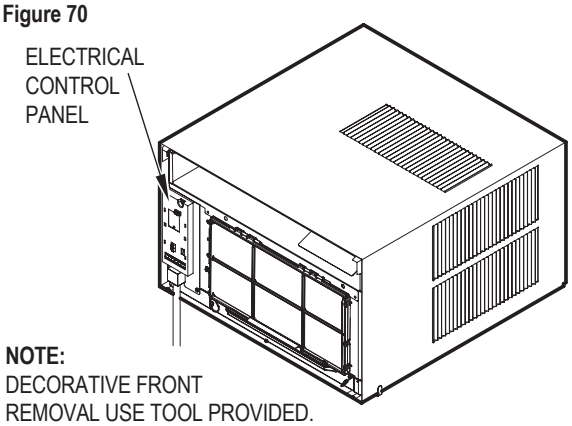

NOTE:
DECORATIVE FRONT
REMOVAL USE TOOL PROVIDED.
(SEE FIGURE 69 FOR LOCATION OF TOOL)

FRR054

Remove the 3 screws as shown from the electrical control panel. Save to reinstall later.

Figure 71

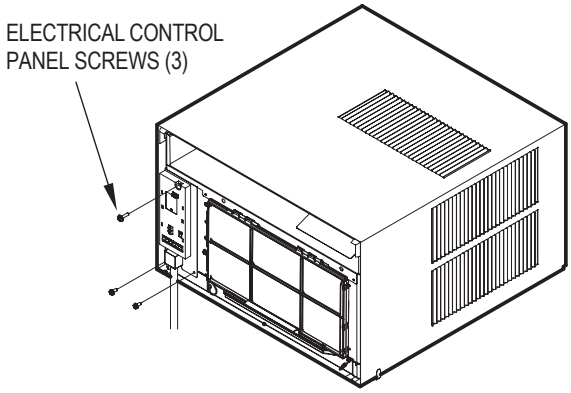

FRR055

STEP 16. Carefully pull out electrical control panel 1", but not all the way.

Figure 72

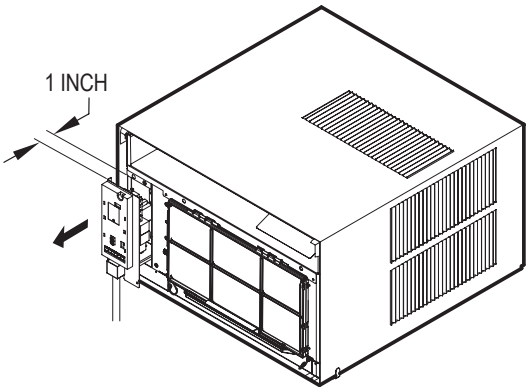

FRR056

STEP 17. Pull electrical cord strain relief downward until free and rotate 90 degrees to the right.

Figure 73

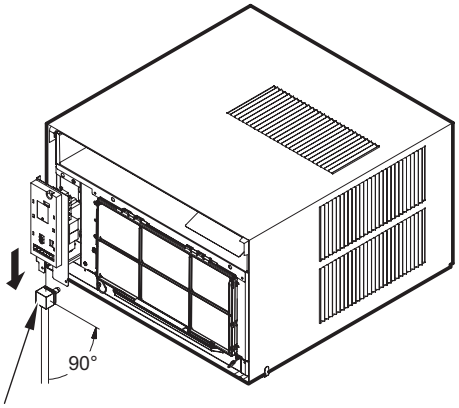

ELECTRICAL CORD
STRAIN RELIEF

FRR057

STEP 18. Push electrical cord strain relief back upward into the electrical control panel.

Figure 74

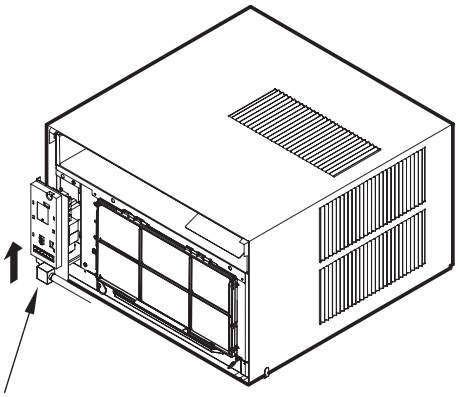

ENSURE THE ELECTRICAL CORD STRAIN RELIEF IS FLUSH WITH THE TOP OF ELECTRICAL CONTROL PANEL.

FRR058

Cord Routing Change continued

STEP 19. Carefully push electrical control panel back into chassis.

Figure 75

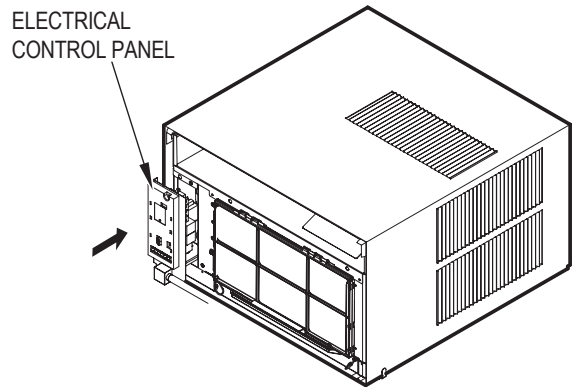

FRR059

STEP 20. Reinstall the 3 screws removed earlier to secure electrical control panel.

Figure 76

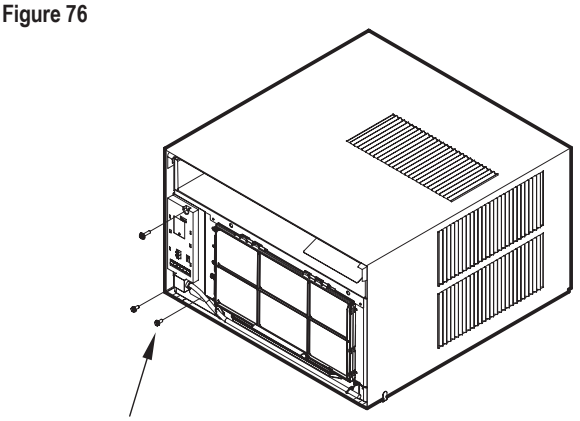

FRR060

STEP 21. If running power cord to the right of the unit, install the cord into the cord retainer clips along the bottom front of the unit.

Figure 77

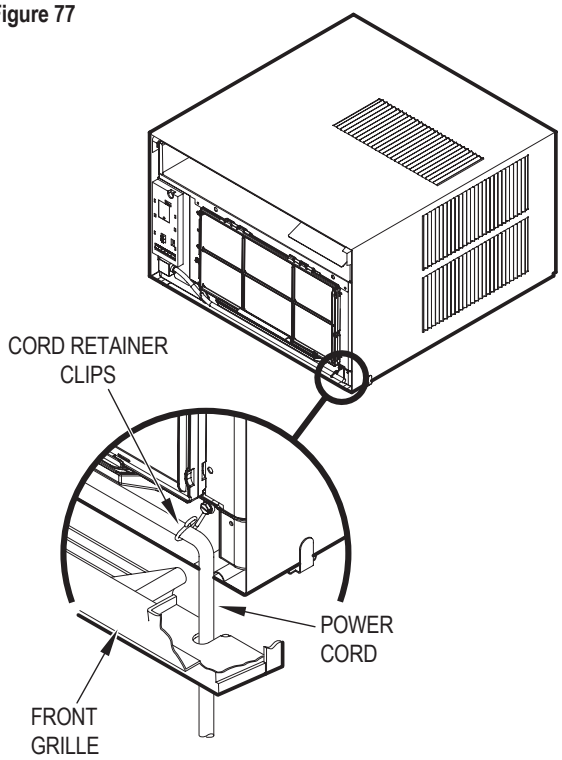

FRR061

Thru-the-Wall Installation

⚠ WARNING

Falling Object Hazard

Not following Installation Instructions for mounting your air conditioner can result in property damage, injury, or death.

The following instructions apply to wood, masonry, brick, concrete or cinder block wall construction.

STEP 1. Follow Steps 1, 2, 3, and 4 of the "STANDARD WINDOW INSTALLATION" instructions beginning on Page 29.

STEP 2. **CABINET PREPARATION** – Remove the sill plate from the cabinet by removing two (2) nuts and screws (Figure 78). Note that the chassis retainer is secured by a right side nut and screw (Detail A, Figure 78). Bend the tabs of the sill plate down into its channel at both ends of the plate or cut them off (Detail B, Figure 78). Rotate the sill plate 180° (end-to-end, Detail B, Figure 78) and reinstall. Reverse the orientation of the nuts and screws, so that the head of the screws are on the underside of cabinet facing up and the nuts are on top (Detail C, Figure 78). Ensure that the chassis retainer is reinstalled as shown in the detail.

NOTICE

The outside cabinet condenser air intake louvers MUST NOT BE BLOCKED by extra thick walls.

STEP 3. **WALL PREPARATION** – The maximum wall thickness permissible without special construction is determined by the model size to be installed. Observe the maximum wall thickness shown in Figure 79. Walls exceeding the maximum thickness shown in the chart should be altered as shown in Figure 79.

STEP 4. **CHECKING WIRING AND PLUMBING** – Check for wiring and plumbing inside and outside of the wall to be sure none will be damaged when the cabinet framework is being constructed.

STEP 5. **OPENING CONSTRUCTION** – Depending upon size of unit to be installed, lay out the hole dimensions per Table 3. Cut and frame-in the opening to finished dimensions. If the wall construction is a typical frame, or 2" x 4" studding with brick or stone veneers, locate the opening next to one of the studs. For masonry, concrete, or cinder block walls, locate an opening for your convenience (see Figures 80, 81, and 82).

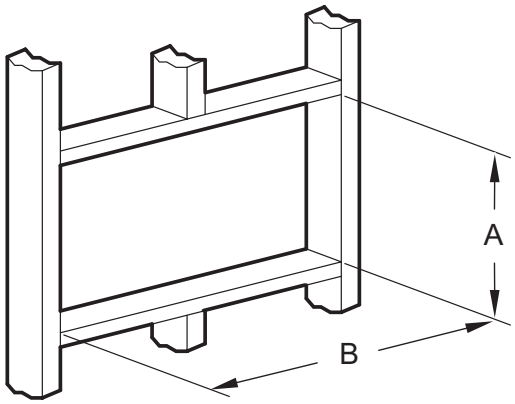

Table 3

FINISHED DIMENSION	SMALL CHASSIS	MEDIUM CHASSIS	LARGE CHASSIS
A	16 3/16"	18 3/16"	20 3/8"
B	26 3/16"	26 3/16"	28 1/4"

NOTE: These dimensions are for finished opening size.

Thru-the-Wall Installation continued

Figure 78

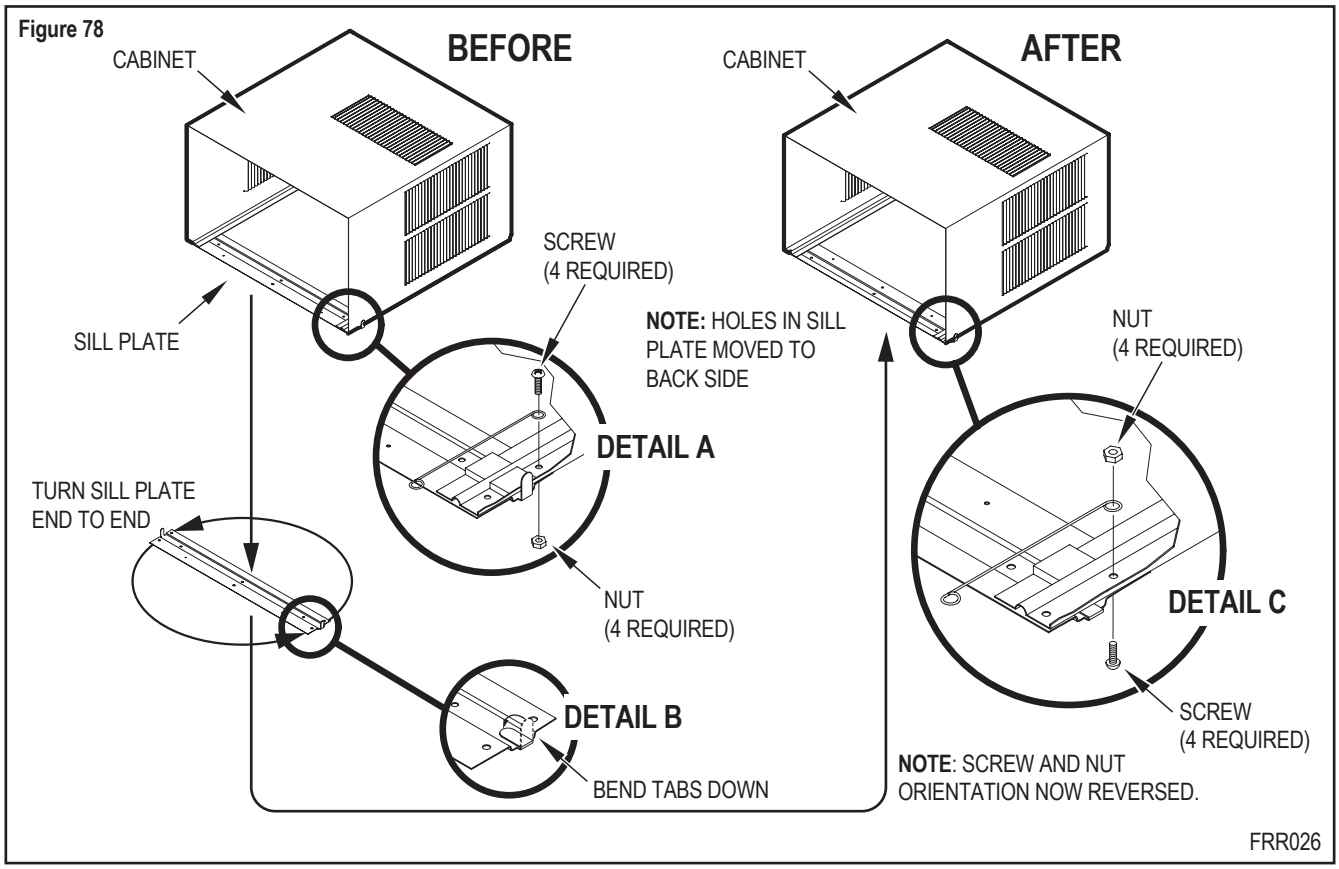

Figure 79

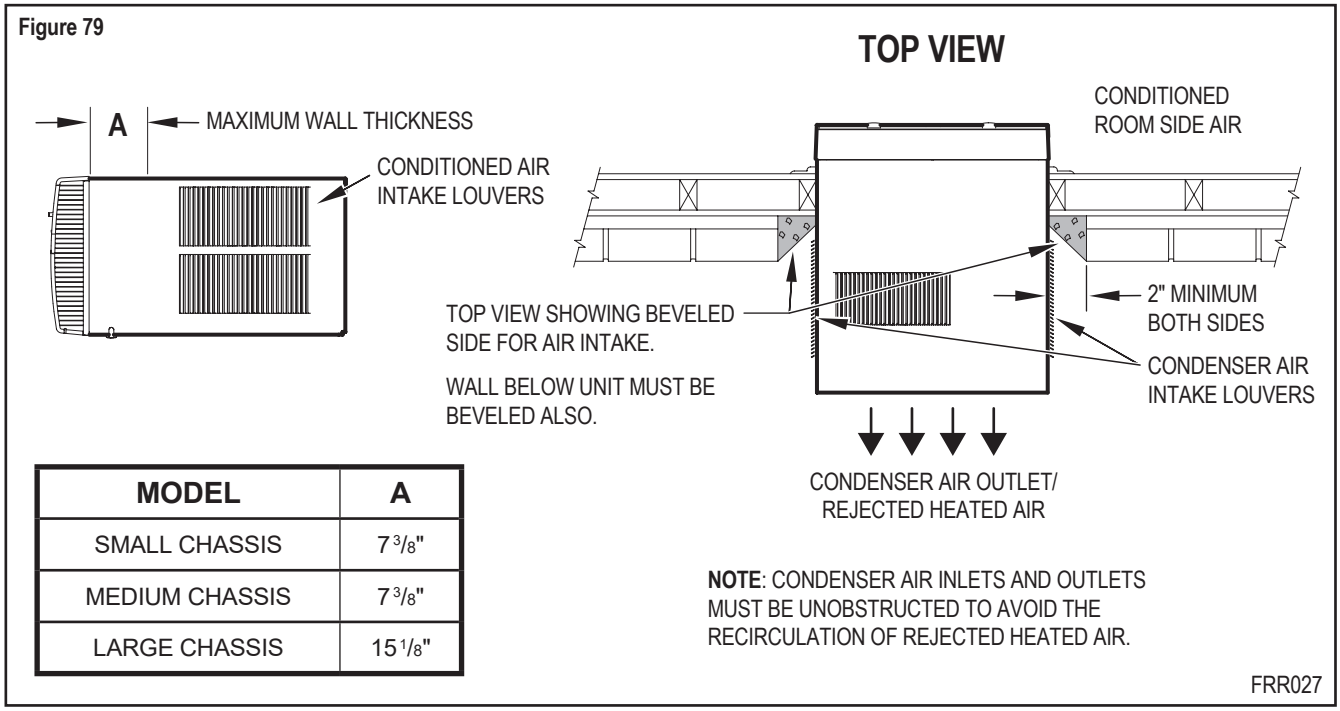

MODEL	A
SMALL CHASSIS	7 3/8"
MEDIUM CHASSIS	7 3/8"
LARGE CHASSIS	15 1/8"

Thru-the-Wall Installation continued

Figure 80

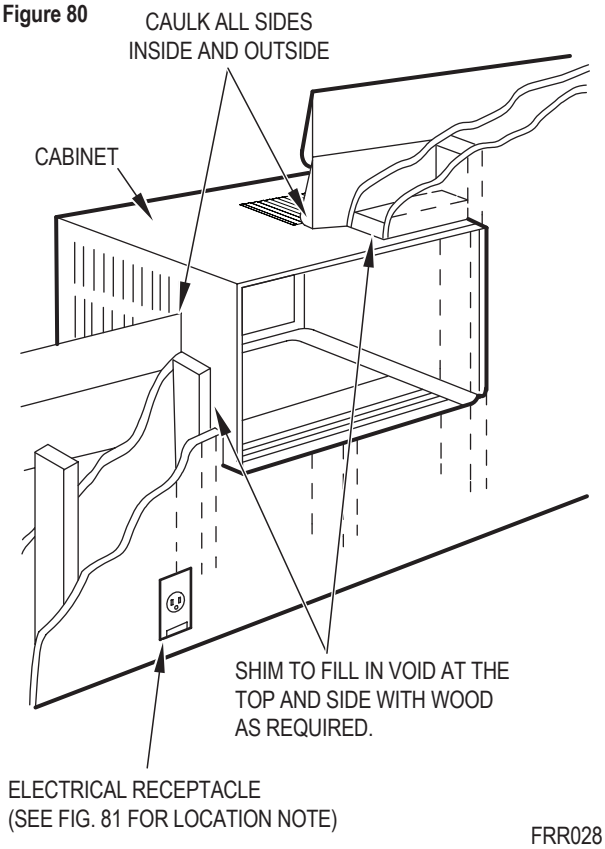

Figure 81

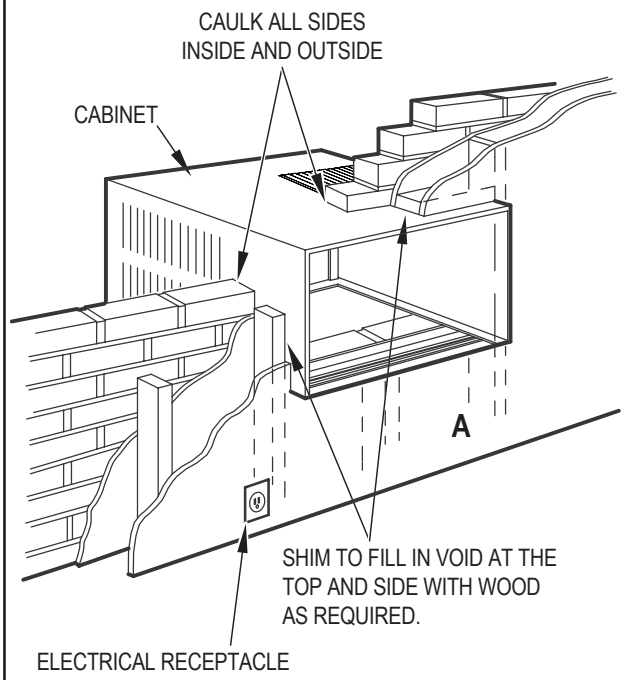

Figure 82

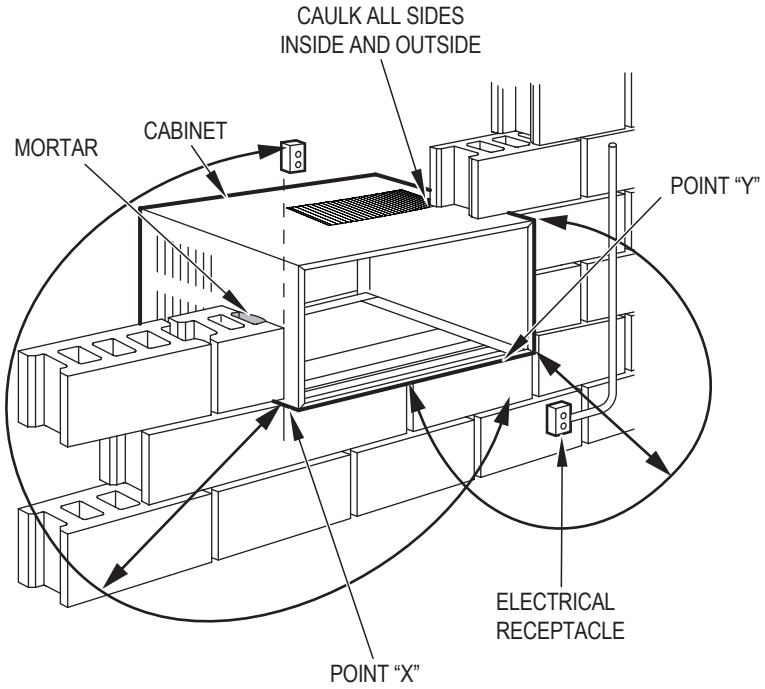

From Point "X"	Small/Medium	Large
115V	69"	N/A
230V	45"	45"

From Point "Y"	Small/Medium	Large
115V	45"	N/A
230V	21"	20"

Thru-the-Wall Installation continued

STEP 6. Slide the cabinet into the hole far enough to allow the guide-channel of the sill plate to contact the inside wall surface (Figure 83).

STEP 7. Drill three (3) 5/32" diameter pilot holes (use the sill plate holes as a guide) into the frame and install three (3) #12 x 2" long screws (Item 4) (Figure 83).

NOTE: Alternate fasteners are required when securing the sill plate or support brackets to material other than wood (cinder block, brick, masonry, or concrete). These items can be purchased at your local hardware store.

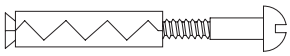

EXPANSION ANCHOR BOLT

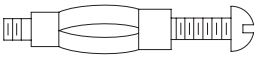

MOLLY OR TOGGLE BOLT

NOTE: DO NOT LEVEL the cabinet from front to back. Make sure there is approximately 3/8" to 1/2" slope (1/8 to 1/4 bubble on the level) toward the outside of the house.

STEP 8. Drill two (2) 5/32" diameter pilot holes in each cabinet side at the locations shown (Figure 83) and install four (4) #12 x 2" screws (Item 4). Provided that Step 5 (hole construction) provides a sturdy mount with solid vertical studs, support brackets may not be required. The installation must support the weight of the unit plus an additional weight of 400 pounds on the rear of the cabinet. If support brackets (Item 1) are available, they can be installed as shown in Figure 83.

STEP 9. Complete the installation by following Steps 12 through 15 of "STANDARD WINDOW INSTALLATION" instructions, starting on Page 35.

Figure 83

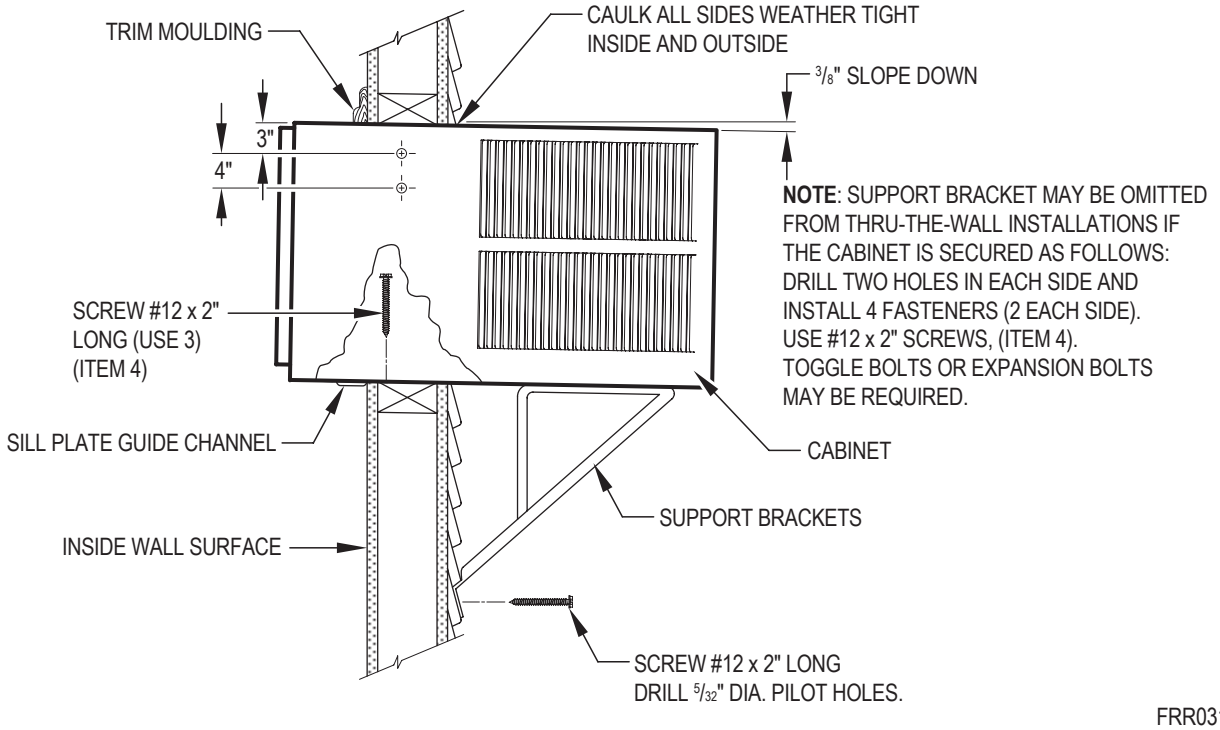

Final Inspection & Start-up Checklist

- Inspect and ensure that all components and accessories have been installed properly and that they have not been damaged during the installation progress.
- Check the condensate water drain(s) to ensure that they are adequate for the removal of condensate water, and that they meet the approval of the end user.
- Ensure that all installation instructions concerning clearances around the unit have been adhered to. Check to ensure that the unit air filter, indoor coil, and outdoor coil are free from any obstructions.
- Ensure that the circuit breaker(s) or fuse(s) and supply circuit wire size have been sized correctly. If the unit was supplied with a power supply cord, insure that it is stored properly.
- Ensure that the entire installation is in compliance with all applicable national and local codes and ordinances having jurisdiction.
- Secure components and accessories, such as a decorative front cover.
- Start the unit and check for proper operation of all components in each mode of operation.
- Instruct the owner or operator of the units operation, and the manufacturer's Routine Maintenance.

NOTE: A log for recording the dates of maintenance and/ or service is recommended.

- Present the owner or operator of the equipment with the Installation & Operation Manual, all accessory installation instructions, and the name, address, and telephone number of the Authorized Friedrich Warranty Service Company in the area for future reference if necessary.

This is a warm weather appliance

Your air conditioner is designed to cool in warm weather when the outside temperature is above 60 °F (15.6 °C) and below 115 °F (46.1 °C), so it won't cool a room if it is already cool outside. If you want to cool a room in the spring or fall, select the **FAN ONLY** mode and set the Fresh Air/ Exhaust air control to Fresh Air. This will bring in a supply of cooler outside air.

Condensation is normal

Air conditioners actually pump the heat and humidity from your room to the outside. Humidity becomes water, and your air conditioner will use most of the water to keep the outside coil cool. If there is excessive humidity, there may be excess water that will drip outside. This is normal operation.

Frosting

This usually occurs because of insufficient airflow across the coils, a dirty filter, cool damp weather, or all these. Set the SYSTEM mode to **FAN ONLY** and the frost will disappear. Setting the thermostat a little warmer will probably prevent the frosting from recurring.

Noises

All air conditioners make some noise. Friedrich units are designed to operate as quietly as possible. An air conditioner mounted in a wall is quieter than one mounted in a window. It is important to ensure that the chassis seal gasket (Item 13) is properly installed (refer to the Installation Instructions).

Heat pumps operate differently

If your unit is a "KH", or heat pump model, there are some things that you will want to be aware of. Some functions of a heat pump differ from your unit when it is used for heating:

1. It is normal for ice to form on the outdoor coil of the heat pump. Moisture in the outside air, passing over the coil when very cold, will form ice.

2. If the outdoor temperature drops below 37 °F (3 °C), your heat pump will automatically turn on the electric resistance heat. When the temperature rises to 40 °F (4 °C), the compressor will resume the heat pump operation. If your unit is a 115 volt model (KHS10), it is designed for use in warmer climates and does not have an electrical heat feature, and will not provide adequate heat below 37 °F (2.8 °C).

Control Panel Battery Change Procedure

Remove the grille, by loosening four (4) captive screws (see Figure 84). In the upper left corner, remove one (1) screw on the battery retaining door (see Figure 85). Remove and replace the battery (CR2450). Reinstall the battery retaining door. Align the grille guide pins then tighten the four (4) captive screws. Before closing the grille panel door, check the filter. Clean or replace it as necessary.

Figure 84

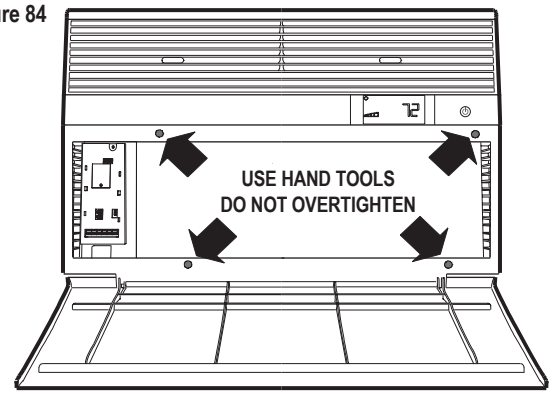

1. USE HAND TOOLS WHEN INSTALLING AND REMOVING FRONT PANEL. DO **NOT OVERTIGHTEN SCREWS**.

2. **DISCONNECT POWER** AND FOLLOW ALL LABELED **WARNINGS** WHEN FRONT PANEL IS REMOVED.

FRR010

Figure 85

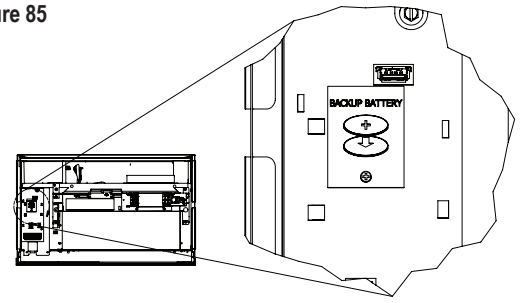

Routine Maintenance

To ensure proper unit operation, the air filter should be cleaned at least monthly, and more frequently if conditions warrant. The unit must be turned off before the filter is cleaned.

To Remove, Wash and Replace Filter

Lower front panel (Figure 2). Use the handle on the filter to flex filter up and out of retainer. Remove filter from unit (Figure 3). Clean the filter monthly or more frequently if needed. Refer to the Accessories section for filter options.

Coils & Chassis

NOTE: Do not use a caustic cleaning agent on coils or base pan. Use a biodegradable cleaning agent and degreaser. The use of harsh cleaning materials may lead to deterioration of the aluminum fins or the coil end plates.

The indoor coil and outdoor coils and base pan should be inspected periodically (annually or semi-annually) and cleaned of all debris (lint, dirt, leaves, paper, etc.) as necessary. Under extreme conditions, more frequent cleaning may be required. Clean the coils and base pan with a soft brush and compressed air or vacuum. A pressure washer may also be used; however, you must be careful not to bend the aluminum fin pack. Use a sweeping up and down motion in the direction of the vertical aluminum fin pack when pressure cleaning coils.

NOTE: It is extremely important to insure that none of the electrical and/or electronic parts of the unit get wet. Be sure to cover all electrical components to protect them from water or spray.

Decorative Front

Use a damp (not wet) cloth when cleaning the control area to prevent water from entering the unit, and possibly damaging the electronic control.

The decorative front and the cabinet can be cleaned with warm water and a mild liquid detergent. Do NOT use solvents or hydrocarbon based cleaners such as acetone, naphtha, gasoline, benzene, etc.

The indoor coil can be vacuumed with a dusting attachment if it appears to be dirty. DO NOT BEND FINS. The outdoor coil can be gently sprayed with a hose if you can get to it. If not, you might call your dealer for a more thorough cleaning when needed.

The air filter should be inspected weekly and cleaned if needed by vacuuming with a dust attachment or by cleaning in the sink using warm water and a mild dishwashing detergent. Dry the filter thoroughly before reinstalling. Use caution, the coil surface can be sharp.

Fan Motor & Compressor

The fan motor & compressor are permanently lubricated and require no additional lubrication.

Wall Sleeve

Inspect the inside of the wall sleeve and drain system periodically (annually or semi-annually) and clean as required. Under extreme conditions, more frequent cleaning may be necessary. Clean both of these areas with an antibacterial and antifungal cleaner. Rinse both items thoroughly with water and ensure that the drain outlets are operating correctly. Check the sealant around the sleeve and reseal areas as needed.

Service and Assistance

Before calling for service, please check the "Troubleshooting Tips" section on Pages 46 and 47. This may help you to find the answer to your problem, avoid unnecessary service calls, and save you the cost of a service call if the problem is not due to the product itself. If you have checked the "Basic Troubleshooting" section and still need help, it is available as follows:

You can find the name of your local Authorized Service Provider by visiting our website at www.friedrich.com.

If you require further assistance

You can call the Customer Support Call Center at **1-800-541-6645**.

Before calling, please make sure that you have the complete model and serial number, and date of purchase of your equipment available. By providing us with this information, we will be better able to assist you.

Our specialists are able to assist you with:

- Specifications and Features of our equipment.
- Referrals to dealers, and distributors.
- Use and Care Information.
- Recommended maintenance procedures.
- Installation information.
- Referrals to Authorized Service Providers and Parts depots.

Available Accessories

DC-2 Drain Kit – Part No. 01900235

In some installations, excess condensate water caused by extremely humid conditions, may result in an undesirable water drip such as on a patio or over an entryway. MODEL DC-2 DRAIN KIT (Part No. 01900-235) can be installed to drain excess condensation to an alternate location.

Carbon Filter Kits

The kits vary depending on the chassis size (small, medium, large). Each kit contains three (3) filters.

KWCFS – Carbon filter kit for small chassis models.
KWCFM – Carbon filter kit for medium chassis models.
KWCFL – Carbon filter kit for large chassis models.

FriedrichLink™ Adapter Accessory

KWIFI – FriedrichLink™ Adapter Accessory for wireless control and additional programming options.

Decorative Color Front Panel Kits

The kits vary depending on the chassis size (small, medium, large).

KWBGE(S/M/L)A – S/M/L Decorative Front Cover in Classic Beige
KWBLK(S/M/L)A – S/M/L Decorative Front Cover in Black Onyx
KWBLU(S/M/L)A – S/M/L Decorative Front Cover in Cobalt Blue
KWPNK(S/M/L)A – S/M/L Decorative Front Cover in Pink Diamond
KWRED(S/M/L)A – S/M/L Decorative Front Cover in Deep Red
KWWHT(S/M/L)A – S/M/L Decorative Front Cover in Designer White

Window Installation Kits (Standard in Kühl Models without Heat)

KWIKS – For all KES and KHS models.
KWIKM – For all KEM and KHM models.
KWIKL – For all KEL and KHL models.

See **www.friedrich.com** for additional accessories for your unit.

Troubleshooting Tips

COMPLAINT	CAUSE	SOLUTION
Unit does not operate.	• The unit is turned to the off position, or the thermostat is satisfied.	• Turn the unit to the on position and raise or lower temperature setting (as appropriate) to call for operation.
	• The LCDI power cord is unplugged.	• Plug into a properly grounded 3 prong receptacle. See “Electrical Rating Tables” on Page 6 for the proper receptacle type for your unit.
	• The LCDI power cord has tripped (Reset button has popped out).	• Press and release RESET (Listen for click. Reset button latches and remains in.) to resume operation.
	• The circuit breaker has tripped or the supply circuit fuse has blown.	• Reset the circuit breaker, or replace the fuse as applicable. If the problem continues, contact a licensed electrician.
	• There has been a local power failure.	• The unit will resume normal operation once power has been restored.
Unit Trips Circuit Breaker or Blows Fuses.	• Other appliances are being used on the same circuit.	• The unit requires a dedicated outlet circuit, not shared with other appliances.
	• An extension cord is being used.	• Do NOT use an extension cord with this or any other air conditioner.
	• The circuit breaker or time-delay fuse is not of the proper rating.	• Replace with a circuit breaker or time-delay fuse of the proper rating. See “Electrical Rating Tables” on Page 6 for the proper circuit breaker/fuse rating for your unit. If the problem continues, contact a licensed electrician.
LCDI Power Cord Trips (Reset Button Pops Out).	• The LCDI power cord can trip (Reset button pops out) due to disturbances on your power supply line.	• Press and release RESET (Listen for click. Reset button latches and remains in.) to resume normal operation.
	• Electrical overload, overheating, or cord pinching can trip (Reset button pops out) the LCDI power cord.	• Once the problem has been determined and corrected, press and release RESET (Listen for click. Reset button latches and remains in.) to resume normal operation.
	NOTE: A damaged power supply cord must be replaced with a new power supply cord obtained from the product manufacturer and must not be repaired.	
Unit Does Not Cool/Heat Room Sufficiently, or Cycles On And Off Too Frequently.	• The return/discharge air grille is blocked.	• Ensure that the return and/or discharge air paths are not blocked by curtains, blinds, furniture, etc.
	• Windows or doors to the outside are open.	• Ensure that all windows and doors are closed.
	• The temperature is not set at a cool enough/warm enough setting.	• Adjust the Temperature control to a cooler or warmer setting as necessary.
	• The filter is dirty or obstructed.	• Clean the filter, (see Routine Maintenance), or remove obstruction.
	• The indoor coil or outdoor coil is dirty or obstructed.	• Clean the coils, (see Routine Maintenance), or remove obstruction.
	• There is excessive heat or moisture (cooking, showers, etc.) in the room.	• Be sure to use exhaust vent fans while cooking or bathing and, if possible, try not to use heat producing appliances during the hottest part of the day.
	• The temperature of the room you are trying to cool is extremely hot.	• Allow additional time for the air conditioner to cool off a very hot room.

Troubleshooting Tips continued

COMPLAINT	CAUSE	SOLUTION
Unit Does Not Cool/ Heat Room Sufficiently, or Cycles On And Off Too Frequently (continued).	• The outside temperature is below 60 °F (16 °C).	• Do not try to operate your air conditioner in the cooling mode when the outside temperature is below 60 °F (16 °C). The unit will not cool properly, and the unit may be damaged.
	• The digital control is set to fan cycling mode.	• Since the fan does not circulate the room air continuously at this setting, the room air does not mix as well and hot (or cold) spots may result. Using the continuous fan setting is recommended to obtain optimum comfort levels.
	• The air conditioner has insufficient cooling capacity to match the heat gain of the room.	• Check the cooling capacity of your unit to ensure it is properly sized for the room in which it is installed. Room air conditioners are not designed to cool multiple rooms.
	• The air conditioner has insufficient heating capacity to match the heat loss of the room.	• Check the heating capacity of your unit. Air conditioners are sized to meet the cooling load, and heater size is then selected to meet the heating load. In extreme northern climates, room air conditioners may not be able to be used as a primary source of heat.
Unit Runs Too Much.	• This may be due to an excessive heat load in the room.	• If there are heat producing appliances in use in the room, or if the room is heavily occupied, the unit will need to run longer to remove the additional heat.
	• It may also be due to an improperly sized unit.	• Be sure to use exhaust vent fans while cooking or bathing and, if possible, try not to use heat producing appliances during the hottest part of the day.
	• This may be normal for higher efficiency (EER) air conditioners.	• The use of higher efficiency components in your new air conditioner may result in the unit running longer than you feel it should. This may be more apparent, if it replaced an older, less efficient, model. The actual energy usage, however, will be significantly less when compared to older models.
	• You may notice that the discharge air temperature of your new air conditioner may not seem as cold as you may be accustomed to from older units. This does not; however, indicate a reduction in the cooling capacity of the unit.	• The energy efficiency ratio (EER) and cooling capacity rating (Btu/ h) listed on the unit's rating plate are both agency certified.

FRIEDRICH

Friedrich Air Conditioning Company
10001 Reunion Place, Suite 500
San Antonio, TX 78216

1-800-541-6645
www.friedrich.com

ROOM AIR CONDITIONERS
LIMITED WARRANTY
FIRST YEAR

ANY PART: If any part supplied by FRIEDRICH fails because of a defect in workmanship or material within twelve months from date of original purchase, FRIEDRICH will repair the product at no charge, provided room air conditioner is reasonably accessible for service. Any additional labor cost for removing inaccessible units and/or charges for mileage related to travel by a Service Agency that exceeds 25 miles one way will be the responsibility of the owner. This remedy is expressly agreed to be the exclusive remedy within twelve months from the date of the original purchase.

SECOND THROUGH FIFTH YEAR

SEALED REFRIGERANT SYSTEM: If the Sealed Refrigeration System (defined for this purpose as the compressor, condenser coil, evaporator coil, reversing valve, check valve, capillary, filter drier, and all interconnecting tubing) supplied by FRIEDRICH in your Room Air Conditioner fails because of a defect in workmanship or material within sixty months from date of purchase, FRIEDRICH will pay a labor allowance and parts necessary to repair the Sealed Refrigeration System; PROVIDED FRIEDRICH will not pay the cost of diagnosis of the problem, removal, freight charges, and transportation of the air conditioner to and from the Service Agency, and the reinstallation charges associated with repair of the Sealed Refrigeration System. All such cost will be the sole responsibility of the owner. This remedy is expressly agreed to be the exclusive remedy within sixty months from the date of the original purchase.

APPLICABILITY AND LIMITATIONS: This warranty is applicable only to units retained within the Fifty States of the U.S.A., District of Columbia, and Canada. This warranty is not applicable to:

1. Air filters or fuses.
2. Products on which the model and serial numbers have been removed.
3. Products which have defects or damage which results from improper installation, wiring, electrical current characteristics, or maintenance; or caused by accident, misuse or abuse, fire, flood, alterations and/or misapplication of the product and/or units installed in a corrosive atmosphere, default or delay in performance caused by war, government restrictions or restraints, strikes, material shortages beyond the control of FRIEDRICH, or acts of God.

OBTAINING WARRANTY PERFORMANCE: Service will be provided by the FRIEDRICH Authorized Dealer or Service Organization in your area. They are listed in the Yellow Pages. If assistance is required in obtaining warranty performance, write to: Room Air Conditioner Service Manager, Friedrich Air Conditioning Co.

LIMITATIONS: THIS WARRANTY IS GIVEN IN LIEU OF ALL OTHER WARRANTIES. Anything in the warranty notwithstanding, ANY IMPLIED WARRANTIES OF FITNESS FOR PARTICULAR PURPOSE AND/OR MERCHANTABILITY SHALL BE LIMITED TO THE DURATION OF THIS EXPRESS WARRANTY. MANUFACTURER EXPRESSLY DISCLAIMS AND EXCLUDES ANY LIABILITY FOR CONSEQUENTIAL OR INCIDENTAL DAMAGE FOR BREACH OF ANY EXPRESSED OR IMPLIED WARRANTY.

NOTE: Some states do not allow limitations on how long an implied warranty lasts, or do not allow the limitation or exclusion of consequential or incidental damages, so the foregoing exclusions and limitations may not apply to you.

OTHER: This warranty gives you specific legal rights, and you may also have other rights which vary from state to state.

PROOF OF PURCHASE: Owner must provide proof of purchase in order to receive any warranty related services.

All service calls for explaining the operation of this product will be the sole responsibility of the consumer.

All warranty service must be provided by an Authorized FRIEDRICH Service Agency, unless authorized by FRIEDRICH prior to repairs being made.

Kühl® Standard Chassis

Performance Testing Installation and Test Method

The following instructions only apply to laboratory test procedures and do not apply to actual product installation and operation.

ANSI/ASHRAE Standard 16-1983 (RA 2009) Method of Testing for Rating Room Air Conditioners and Packaged Terminal Air Conditioners shall be adhered to when testing for obtaining cooling capacity and airflow quality for rating this room air conditioning unit.

Maximum cooling capacity must be achieved in accordance with the following instructions:
For maximum capacity and efficiency, air shall be sampled 4 to 6 inches away from the intake of the unit. See images below:

FRONT VIEW

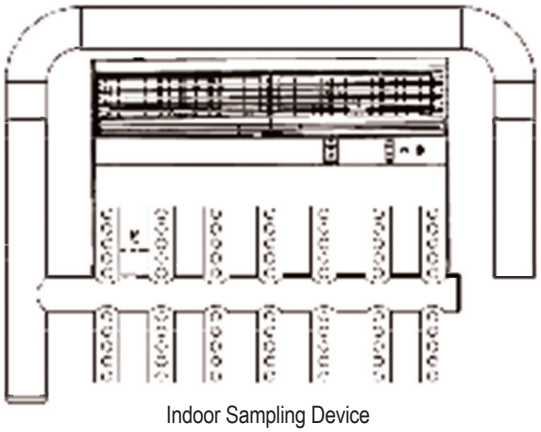

Indoor Sampling Device

FRONT VIEW

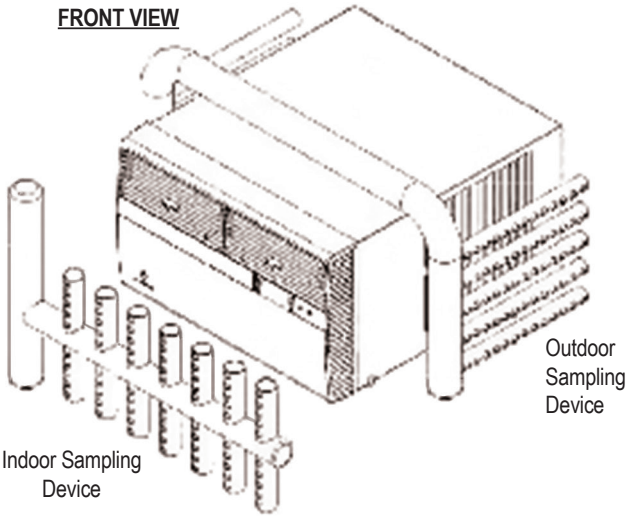

BACK VIEW

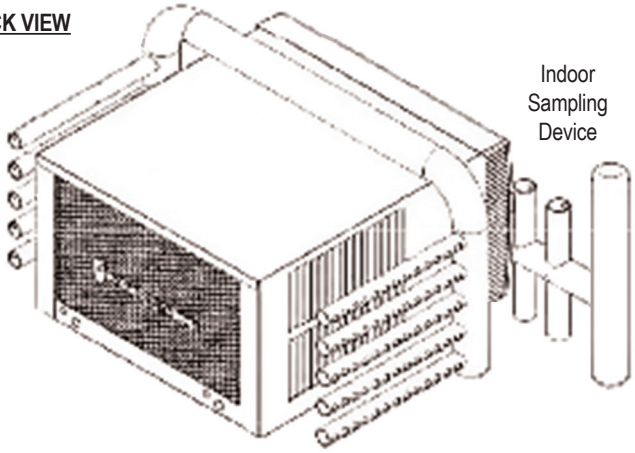

Outdoor Sampling Device

TOP VIEW

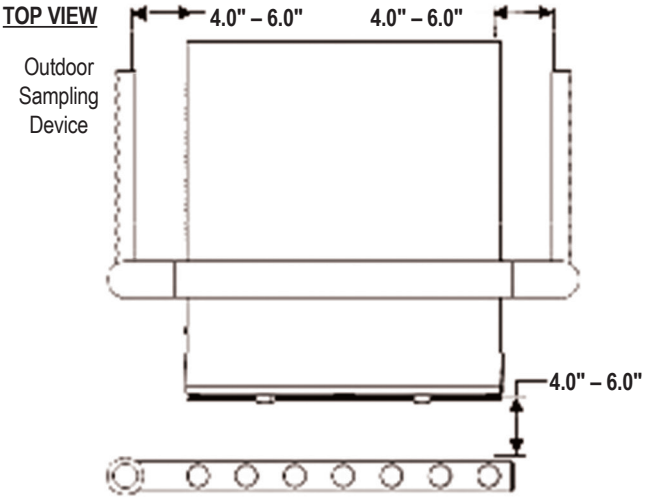

Indoor Sampling Device

The indoor and outdoor air sampling devices must comply with:
ASHRAE 41.1-1986 (RA 2006) - Method for Temperature Measurement
ASHRAE 41.6-1994 (RA 2006) - Method for Measurement of Moist Air Properties
NOTE: *Images of the sampler are for display purposes and not to scale*

Kühl® Standard Chassis

Performance Testing Installation and Test Method *continued*

Test Unit Installation

As per ANSI/ASHRAE Standard 16-1983 (RA 2009), section 4.2.2, this air conditioner shall be installed per the instructions specified in this Installation & Operation Manual.

Test Unit Settings

Louver position:

- Louvers shall be kept in the recessed position (not extended)
- Louvers shall be centered (not directed left or right) and pointed upward

Fan speed:

- Fan shall be set to the highest speed setting
    - HIGH

System Operation:

- Unit shall be operating in “Cool” Mode

THIS PAGE LEFT INTENTIONALLY BLANK.

Friedrich Air Conditioning Co.
10001 Reunion Place, Suite 500 • San Antonio, Texas 78216
1-800-541-6645
www.friedrich.com

Printed in Mexico

93001015_00