Installation and Operation Manual

FRIEDRICH

Freshaire® R-32 Series PTAC Packaged Terminal Air Conditioners & Heat Pumps

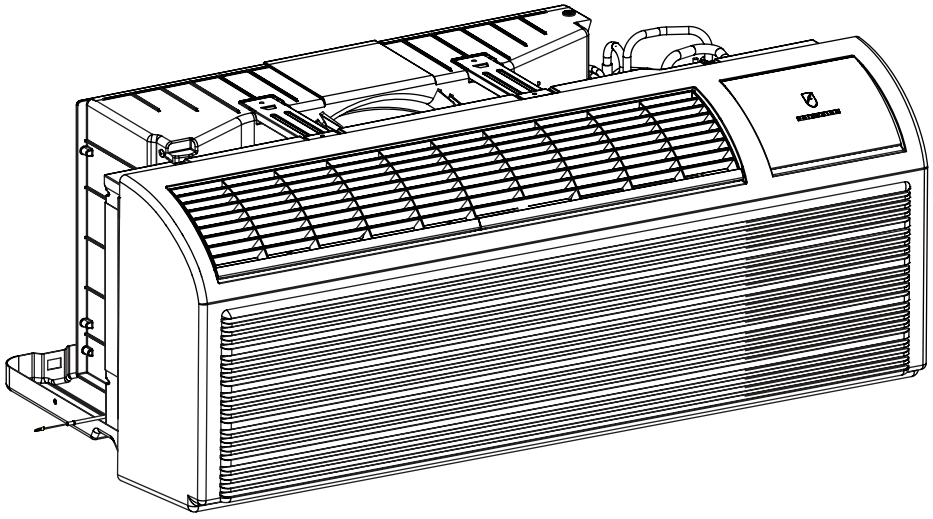

Standard Chassis Models Using R-32 Refrigerant

9K	PVH09K3FC, PVH09R3FC
12K	PVH12K3FC, PVH12R3FC

THE EXPERTS IN ROOM AIR CONDITIONING

94151101_01 10/2026

Table of Contents

Congratulations 3
General Instructions 3
Safety precautions for R32 refrigerant 6
General Specifications 10
PTAC Installation Recommendations 11
Wall Sleeve Installation Instructions (PDXWSEZ/PDXWSA) 12
Alternate Wall Instalations 13
PXDR10 Drain Kit Installation Instructions (optional for new construction) 16
External Drain (for new construction or unit replacement) 17
PXGA Standard Grille Installation Instructions 18
Chassis Install Preparation. 22
Chassis Installation 24
Friedrich PTAC Digital Control and Unit Features 25
System Configuration 27
Digital Control User Input Configuration 28
Digital Control Operation 30
Remote Control Thermostat Installation 32
Remote Thermostat and Low Voltage Control Connections 32
Final Inspection & Start-up Checklist 34
Routine Maintenance 34
Basic Troubleshooting 35
Service & Assistance 37
Accessories 38

NOTE:
All PTAC 9k BTU units come with a universal 2.5+1.0 kW electric heater (standard 20A power cord for 3.5kW, optional 15A power cord for 2.5kW). All PTAC 12k BTU units come with a universal 3.5+1.5 kW electric heater (standard 20A power cord for 3.5kW, optional 30A power cord for 5kW, optional 15A power cord for 1.5kW).

Congratulations

Thank you for your decision to purchase Friedrich. Your new Friedrich has been carefully engineered and manufactured to give you many years of dependable, efficient operation, maintaining a comfortable temperature and humidity level. Many extra features have been built into your unit to assure quiet operation, the greatest circulation of cool, dry air, and the most economic operation.

General Instructions

The installation and servicing of this equipment must be performed by qualified, experienced technicians only. Professional installation personnel should have the following experience:

- Installing the electric heater
- Opening of sealed components
- Opening of ventilated enclosures
- Commissioning and troubleshooting
- Checking the electric control part and wiring
- Breaking into the refrigerant circuit and charging

IMPORTANT NOTE TO THE OWNER

This manual is to be used by qualified, professionally trained HVAC technicians only. The manufacturer does not assume any responsibility for property damage or personal injury for improper service procedures or services performed by an unqualified Person.

IMPORTANT NOTE TO THE SERVICER

Read this manual and familiarize yourself with the specific items which must be adhered to before attempting to service this unit. The precautions listed in this Installation Manual are intended as supplemental to existing practices. However, if there is a direct conflict between existing practices and the content of this manual, the precautions listed here take precedence.

Your safety and the safety of others are very important.

We have provided many important safety messages in this manual and on your appliance. Always read and obey all safety messages.

This is a safety Alert symbol.
This symbol alerts you to potential hazards that can kill or hurt you and others.
All safety messages will follow the safety alert symbol with the word "WARNING" or "CAUTION". These words mean:

⚠ WARNING — Indicates a hazard which, if not avoided, can result in severe personal injury or death and damage to product or other property.

⚠ CAUTION — Indicates a hazard which, if not avoided, can result in personal injury and damage to product or other property.

All safety messages will tell you what the potential hazard is, tell you how to reduce the chance of injury, and tell you what will happen if the instructions are not followed.

NOTICE — Indicates property damage can occur if instructions are not followed.

⚠ WARNING

KEEP ANY REQUIRED VENTILATION OPENINGS CLEAR OF OBSTRUCTION.

NOTICE

SERVICING SHALL BE PERFORMED ONLY AS RECOMMENDED BY THE MANUFACTURER.

⚠ WARNING

THE APPLIANCE SHALL BE STORED IN A WELL-VENTILATED AREA WHERE THE ROOM SIZE CORRESPONDS TO THE ROOM AREA AS SPECIFIED FOR OPERATION.

⚠ WARNING

THE APPLIANCE SHALL BE STORED IN A ROOM WITHOUT CONTINUOUSLY OPERATING OPEN FLAMES (FOR EXAMPLE AN OPERATING GAS APPLIANCE) AND IGNITION SOURCES (FOR EXAMPLE AN OPERATING ELECTRIC HEATER).

NOTICE

INSTALLATION, SERVICE, MAINTENANCE AND REPAIR OF THIS UNIT MUST BE PERFORMED BY A CERTIFIED TECHNICIAN.

NOTICE

PRODUCT UNINSTALLATION AND RECYCLING MUST BE PERFORMED BY A CERTIFIED TECHNICIAN.

NOTICE

THIS APPLIANCE IS NOT INTENDED FOR USE BY PERSONS (INCLUDING CHILDREN) WITH REDUCED PHYSICAL, SENSORY OR MENTAL CAPABILITIES, OR LACK OF EXPERIENCE AND KNOWLEDGE,
UNLESS THEY HAVE BEEN GIVEN SUPERVISION OR INSTRUCTION CONCERNING USE OF
THE APPLIANCE BY A PERSON RESPONSIBLE FOR THEIR SAFETY.

NOTICE

CHILDREN SHOULD BE SUPERVISED TO ENSURE THAT THEY DO NOT PLAY WITH THE APPLIANCE.

NOTICE

IF THE SUPPLY CORD IS DAMAGED, IT MUST BE REPLACED BY THE MANUFACTURER, ITS SERVICE AGENT OR SIMILARLY QUALIFIED PERSONS IN ORDER TO AVOID A HAZARD.

NOTICE

THE APPLIANCE SHALL BE INSTALLED IN ACCORDANCE WITH NATIONAL WIRING REGULATIONS.

NOTICE

THE SUPPLY VOLTAGE FLUCTUATION SHOULD BE IN THE RANGE OF ±10% OF THE RATED VOLTAGE.

THE FOLLOWING WARNINGS ARE VERY IMPORTANT FOR SAFETY. PLEASE READ THEM CAREFULLY BEFORE INSTALLATION!

1. The air conditioner must be installed by certificated installer. It's forbidden to install by those amateur.
2. Please check whether there is grounding wire in the power supply system before installation. If not, installers should refuse installing and explain the safety principle to users.
3. To avoid electric shock or even death, the socket or terminal blocks for power supply to the air conditioner (include 277V and 115V and 208~230V series and the units that have LCDI power cord) must connect a Ground Fault Circuit Interrupter.
4. During installation, the wire connection must strictly follow the rule which is zero line and fire line of unit should be connected to the zero line and fire line in the power system. The connection in reverse is forbidden. Please be sure the ground wire is firmly connected otherwise it is possible to result in the electrical shock or death.
5. WARNING-Risk of fire. flammable refeigerant used. To be repaired only by trained service personnel. Do no puncture refrigerant tubing. (ATTENTION-Risque d' incendie. Réfrigérant inflammable utilisé. À réparer uniquement par le personnel de service tranined. Ne pas percer les tubes de réfrigérant.)
6. WARNING-Risk of fire. Dispose of properly in accordance with federal or local regulations. Flammable refrigerant used. (AVERTISSEMENT-Risque d' incendie. Éliminez correctement conformément aux réglementations fédérales ou locales. Réfrigérant inflammable utilisé.)
7. WARNING-Risk of fire. Flammable refrigerant used. Consult repair manual/owner' s guide before attempting to service this product. All safety precautions must be followed. (AVERTISSEMENT-Risque d' incendie. Réfrigérant inflammable utilisé. Consultez le manuel de réparation/le guide du propriétaire avant d' essayer d' entretenir ce produit. Toutes les précautions de sécurité doivent être SUIVIES.)
8. WARNING-Risk of fire due to flammable refrigerant used. Follow handling instructions carefully in compliance with national regulations. (ATTENTION-Risque d' incendie dû à l' utilisation d' un fluide frigorigène inflammable. suivre attentivement les instructions de manipulation conformément aux réglementations nationales.)
9. The minimum CLEARANCE from the appliance to combustible surfaces: 30 mm.(La distance minimale entre l'appareil et les surfaces combustibles: 30 mm).

TRANSPORT OF EQUIPMENT CONTAINING FLAMMABLE REFRIGERANTS

Attention is drawn to the fact that additional transportation regulations may exist with respect to equipment containing flammable gas. The maximum number of pieces of equipment or the configuration of the equipment permitted to be transported together will be determined by the applicable transport regulations.

RECOGNIZE THIS SYMBOL AS A SAFETY PRECAUTION

⚠ WARNING

THE MANUFACTURER WILL NOT BE RESPONSIBLE FOR ANY INJURY OR PROPERTY, DAMAGE ARISING FROM IMPROPER SERVICE OR SERVICE PROCEDURES. IF YOU INSTALL OR PERFORM SERVICE ON THIS UNIT, YOU ASSUME RESPONSIBILITY FOR ANY PERSONAL INJURY OR PROPERTY DAMAGE WHICH MAY RESULT, MANY JURISDICTIONS REQUIRE A LICENSE TO INSTALL OR SERVICE HEATING AND AIR CONDITIONING EQUIPMENT.

⚠ WARNING

HIGH VOLTAGE
DISCONNECT ALL POWER BEFORE SERVICING OR INSTALLING THIS UNIT. MULTIPLE POWER SOURCES MAY BE PRESENT, FAILURE TO DO SO MAY CAUSE PROPERTY DAMAGE, PERSONAL INJURY OR DEATH.

⚠ WARNING

• DO NOT USE MEANS TO ACCELERATE THE DEFROSTING PROCESS OR TO CLEAN, OTHER THAN THOSE RECOMMENDED BY THE MANUFACTURER. (N' UTILISEZ PAS DE MOYENS POUR ACCÉLÉRER LE PROCESSUS DE DÉCONGÉLATION OU POUR NETTOYER, AUTRES QUE CEUX RECOMMANDÉS PAR LE FABRICANT.)
• THE APPLIANCE SHALL BE STORED IN A ROOM WITHOUT CONTINUOUSLY OPERATING IGNITION SOURCE (FOR EXAMPLE: OPEN FLAMES, AN OPERATING GAS APPLIANCE OR AN OPERATING ELECTRIC HEATER.) (L' APPAREIL DOIT ÊTRE ENTREPOSÉ DANS UN LOCAL SANS SOURCES D' INFLAMMATION FONCTIONNANT EN CONTINU (PAR EXEMPLE: FLAMMES NUES, APPAREIL À GAZ EN FONCTIONNEMENT OU CHAUFFAGE ÉLECTR IQUE EN FONCTIONNEMENT).)
• DO NOT PIERCE OR BURN. (NE PERCEZ PAS ET NE BRÛLEZ PAS.
• BE AWARE THAT REFRIGERANTS MAY NOT CONTAIN AN ODOUR. (SACHEZ QUE LES FRIGORIGÈNES PEUVEN NE PAS CONTENIR D'ODEUR.)

⚠ WARNING

RISK OF FIRE, FLAMMABLE REFRIGERANT USED. TO BE REPAIRED ONLY BY TRAINED SERVICE PERSONNEL, DO NOT PUNCTURE REFRIGERANT TUBING, DISPOSE OF PROPERLY IN ACCORDANCE WITH FEDERAL OR LOCAL REGULATIONS.

A2L	**WARNING**	THIS SYMBOL THAT THIS APPLIANCE USED A FLAMMABLE REFRIGERANT. IF THE REFRIGERANT IS LEAKED AND EXPOSED TO AN EXTERNAL IGNITION SOURCE, THERE IS A RISK OF FIRE.
	CAUTION	THIS SYMBOL THAT THE OPERATION MANUAL SHOULD BE READ CAREFULLY.
	CAUTION	THIS SYMBOL THAT A SERVICE PERSONNEL SHOULD BE HANDLING THIS EQUIPMENT WITH REFERENCE TO THE INSTALLATION MANUAL.
	CAUTION	THIS SYMBOL THAT INFORMATION IS AVAILABLE SUCH AS THE OPERATING MANUAL OR INSTALLATION MANUAL.

SAFETY PRECAUTIONS FOR R32 REFRIGERANT

• The interior of unit should be maintained by HVAC techs only.

• 1. Information on servicing

• 1.1 Checks to the area

• Prior to beginning work on systems containing FLAMMABLE REFRIGERANTS, safety checks are necessary to ensure that the risk of ignition is minimised. For repair to the REFRIGERATING SYSTEM.

• 1.2 Work procedure

• Work shall be undertaken under a controlled procedure so as to minimise the risk of a flammable gas or vapour being present while the work is being performed.

• 1.3 General work area

• All maintenance staff and others working in the local area shall be instructed on the nature of work being carried out. Work in confined spaces shall be avoided.

• 1.4 Checking for presence of refrigerant

• The area shall be checked with an appropriate refrigerant detector prior to and during work, to ensure the technician is aware of potentially toxic or flammable atmospheres. Ensure that the leak detection equipment being used is suitable for use with all applica ble refrigerants, i. e. non-sparking, adequately sealed or intrinsically safe.

• 1.5 Presence of fire extinguisher

• If any hot work is to be conducted on the refrigerating equipment or any associated parts, appropriate fire extinguishing equip ment shall be available to hand. Have a dry powder or CO_2 fire extinguisher adjacent to the charging area.

• 1.6 No ignition sources

• No person carrying out work in relation to a REFRIGERA TING SYSTEM which involves exposing any pipe work shall use any sources of ignition in such a manner that it may lead to the risk of fire or explosion. All possible ignition sources, inc luding cigarette smoking, should be kept suf ficiently far away from the site of installation, repairing, removing and disposal, during which refrigerant can possibly be released to the surrounding space. Prior to work taking place, the area around the equipment is to be surveyed to make sure tha t there are no flammable hazards or ignition risks. "No Smoking" signs shall be displayed.

• 1.7 Ventilated area

• Ensure that the area is in the open or that it is adequately ventilated before breaking into the system or conducting any hot work. A degree of ventilation shall continue during the period that the work is carried out. The ventilation should safely disperse any released refrigerant and preferably expel it externally into the atmosphere.

• 1.8 Checks to the refrigerating equipment

• Where electrical components are being changed, they shall be fit for the purpose and to the correct specification. At all times the manu - facturer’s maintenance and service guidelines shall be followed. If in doubt, consult the manufacturer’s technical department for assis-tance.

• The following checks shall be applied to installations using FLAMMABLE REFRIGERANTS: the actual REFRIGERANT CHARGE is in accordance with the room size within which the refrigerant containing parts are installed;

• the ventilation machinery and outlets are operating adequately and are not obstructed;

• if an indirect refrigerating circuit is being used, the secondary circuit shall be checked for the presence of refrigerant;

• marking to the equipment continues to be visible and legible. Markings and signs that are illegible shall be corrected;

• refrigerating pipe or components are installed in a position where they are unlikely to be exposed to any substance which may corrode refrigerant containing components, unless the components are constructed of materials whichrea inherently resistant to being corroded or are suitably protected against being so corroded.

• 1.9 Checks to electrical devices

• Repair and maintenance to electrical components shall include initial safety checks and component inspection procedures. If a fault exists that could compromise safety, then no electrical supply shall be connected to the circuit until it is satisfactorily dealt with. If the fault cannot be corrected immediately but it is necessary to continue operation, an adequate temporary solution shall be used. This shall be reported to the owner of the equipment so all parties are advised. Initial safety checks shall include:

• that capacitors are discharged: this shall be done in a safe manner to avoid possibility of sparking;

• that no live electrical components and wiring are exposed while charging, recovering or purging the system;

• that the unit and electrical circuit are properly grounded.

- 1.10 Disposal of equipment using flammable refrigerants
  - See national regulations.
- 1.11 Storage of equipment/appliances
  - The storage of the appliance should be in accordance with the applicable regulations or instructions, whichever is more stringent.
- 1.12 Storage of packed (unsold) equipment
  - Storage package protection should be constructed in such a way that mechanical damage to the equipment inside the package will not cause a leak of the REFRIGERANT CHARGE.
  - The maximum number of pieces of equipment permitted to be stored together will be determined by local regulations.
- 2. Repairs to sealed components
  - Sealed electrical components shall be replaced.
- 3. Repair to intrinsically safe components
  - Instrinsically safe components must be replaced.
- 4. Cabling
  - Check that cabling will not be subject to wear, corrosion, excessive pressure, vibration, sharp edges or any other adverse environmental effects. The check shall also take into account the effects of aging or continual vibration from sources such as compressors or fans.
- 5. Detection of flammable refrigerants
  - Under no circumstances shall potential sources of ignition be used in the searching for or detection of refrigerant leaks. A halide torch (or any other detector using a naked flame) shall not be used.
  - The following leak detection methods are deemed acceptable for all refrigerant systems. Electronic leak detectors may be used to detect refrigerant leaks but, in the case of FLAMMABLE REFRIGERANTS, the sensitivity may not be adequate, or may need re-calibration. (Detection equipment shall be calibrated in a refrigerant-free area.) Ensure that the detector is not a potential source of ignition and is suitable for the refrigerant used. Leak detection equipment shall be set at a percentage of the LFL of the refrigerant and shall be calibrated to the refrigerant employed, and the appropriate percentage of gas (25 % maximum) is confirmed.
  - Leak detection fluids are also suitable for use with most refrigerants but the use of detergents containing chlorine shall be avoided as the chlorine may react with the refrigerant and corrode the copper pipe-work NOTE Examples of leak detection fluids are
  - bubble method,
  - fluorescent method agents.
  - If a leak is suspected, all naked flames shall be removed/extinguished.
  - If a leakage of refrigerant is found which requires brazing, all of the refrigerant shall be recovered from the system, or isolated (by means of shut off valves) in a part of the system remote from the leak.
- 6. Removal and evacuation
  - When breaking into the refrigerant circuit to make repairs – or for any other purpose – conventional procedures shall be used. However, for flammable refrigerants it is important that best practice be followed, since flammability is a consideration. The following procedure shall be adhered to:
    - safely remove refrigerant following local and national regulations;
      - evacuate;
      - purge the circuit with inert gas;
      - evacuate;
      - continuously flush or purge with inert gas when using flame to open circuit; and
      - open the circuit.
  - The refrigerant charge shall be recovered into the correct recovery cylinders if venting is not allowed by local and national codes. For appliances containing flammable refrigerants, the system shall be purged with oxygen-free nitrogen to render the appliance safe for flammable refrigerants. This process might need to be repeated several times. Compressed air or oxygen shall not be used for purging refrigerant systems.
  - For appliances containing flammable refrigerants, refrigerants purging shall be achieved by breaking the vacuum in the system with oxygen-free nitrogen and continuing to fill until the working pressure is achieved, then venting to atmosphere, and finally pulling down to a vacuum. This process shall be repeated until no refrigerant is within the system. When the final oxygen-free nitrogen charge is used, the system shall be vented down to atmospheric pressure to enable work to take place.
  - The outlet for the vacuum pump shall not be close to any potential ignition sources, and ventilation shall be available.

• 7. Charging procedures

• In addition to conventional charging procedures, the following requirements shall be followed.
• Ensure that contamination of different refrigerants does not occur when using charging equipment. Hoses or lines shall be as short as possible to minimise the amount of refrigerant contained in them.
• Cylinders shall be kept in an appropriate position according to the instructions.
• Ensure that the REFRIGERATING SYSTEM is grounded prior to charging the system with refrigerant.
• Label the system when charging is complete (if not already).
• Extreme care shall be taken not to overfill the REFRIGERATING SYSTEM.
• Prior to recharging the system, it shall be pressure-tested with the appropriate purging gas. The system shall be leak-tested on completion of charging but prior to commissioning. A follow up leak test shall be carried out prior to leaving the site.

• 8. Decommissioning

• Before carrying out this procedure, it is essential that the technician is completely familiar with the equipment and all its detail. It is recommended good practice that all refrigerants are recovered safely. Prior to the task being carried out, an oil and refrigerant sample shall be taken in case analysis is required prior to re-use of recovered refrigerant. It is essential that electrical power is available before the task is commenced.
• Become familiar with the equipment and its operation.
• Isolate system electrically.
• Before attempting the procedure, ensure that:
  ▪ mechanical handling equipment is available, if required, for handling refrigerant cylinders;
  ▪ all personal protective equipment is available and being used correctly;
  ▪ the recovery process is supervised at all times by a competent person;
  ▪ recovery equipment and cylinders conform to the appropriate standards.
• Pump down refrigerant system, if possible.
• If a vacuum is not possible, make a manifold so that refrigerant can be removed from various parts of the system.
• Make sure that cylinder is situated on the scales before recovery takes place.
• Start the recovery machine and operate in accordance with instructions.
• Do not overfill cylinders (no more than 80% volume liquid charge).
• Do not exceed the maximum working pressure of the cylinder, even temporarily.
• When the cylinders have been filled correctly and the process completed, make sure that the cylinders and the equipment are removed from site promptly and all isolation valves on the equipment are closed off.
• Recovered refrigerant shall not be charged into another REFRIGERATING SYSTEM unless it has been cleaned and checked.

• 9. Labelling

• Equipment shall be labelled stating that it has been de-commissioned and emptied of refrigerant. The label shall be dated and signed. For appliances containing FLAMMABLE REFRIGERANTS, ensure that there are labels on the equipment stating the equipment contains FLAMMABLE REFRIGERANT.

• 10. Recovery

• When removing refrigerant from a system, either for servicing or decommissioning, it is recommended good practice that all refrigerants are removed safely.
• When transferring refrigerant into cylinders, ensure that only appropriate refrigerant recovery cylinders are employed. Ensure that the correct number of cylinders for holding the total system charge is available. All cylinders to be used are designated for the recovered refrigerant and labelled for that refrigerant (i. e. special cylinders for the recovery of refrigerant). Cylinders shall be complete with pressure-relief valve and associated shut-off valves in good working order. Empty recovery cylinders are evacuated and, if possible, cooled before recovery occurs. The recovery equipment shall be in good working order with a set of instructions concerning the equipment that is at hand and shall be suitable for the recovery of the flammable refrigerant. If in doubt, the manufacturer should be consulted. In addition, a set of calibrated weighing scales shall be available and in good working order. Hoses shall be complete with leak-free disconnect couplings and in good condition.
• The recovered refrigerant shall be processed according to local legislation in the correct recovery cylinder, and the relevant waste transfer note arranged. Do not mix refrigerants in recovery units and especially not in cylinders.
• If compressors or compressor oils are to be removed, ensure that they have been evacuated to an acceptable level to make certain that flammable refrigerant does not remain within the lubricant. The compressor body shall not be heated by an open flame or other ignition sources to accelerate this process. When oil is drained from a system, it shall be carried out safely.

• 11. WARNING FOR USING R32 REFRIGERANT

• Appliance shall be installed, operated and stored in a room with a floor area larger than 4 m².

• Appliance shall not be installed in an unvertilated space, if that space is smaller than 4 m².
• Compliance with national gas regulations shall be observed.
• The appliance shall be stored so as to prevent mechanical damage from occurring.
• Any person who is involved with working on or breaking into a refrigerant circuit should hold a current valid certificate from an indus-try-accredited assessment authority, which authorises their competence to handle refrigerants safely in accordance with an industry recognised assessment specification.
• Servicing shall only be performed as recommended by the equipment manufacturer. Maintenance and repair requiring the assistance of other skilled personnel shall be carried out under the supervision of the person competent in the use of flammable refrigerants.
• Please follow the instruction carefully to handle, install, clear, service the air conditioner to avoid any damage or hazard. Flammable Refrigerant R32 is used within air conditioner. When maintaining or disposing the air conditioner, the refrigerant (R32) shall be recovered properly, shall not discharge to air directly.
• No any open fire or device like switch which may generate spark/arcing shall be around air conditioner to avoid causing ignitio n of the flammable refrigerant used.
• Please follow the instruction carefully to store or maintain the air conditioner to prevent mechanical damage from occurring.
• Flammable refrigerant -R32 is used in air conditioner. Please follow the instruction carefully to avoid any hazard.

• 12. Installation & Assembly Instructions

• Before installing the appliance, you must read the manual carefully to get the safety information and notes.
• Unit refrigerant charge amount: refer to unit name plate marking.
• A leak test must be done after the installation is completed.
• It is a must to do the safety inspection before maintaining or repairing an air conditioner using combustible refrigerant in order to ensure that the fire risk is reduced to minimum.
• It is necessary to operate the machine under a controlled procedure in order to ensure that any risk arising from the combustible gas or vapor during the operation is reduced to minimum.

• 13. Please note that:

1. Handle gently.
2. At least two people needed to lift the chassis and prohibit lift the copper pipes.
3. Only trained or qualified people for installatio.
4. The installation site should be in a well-ventilated condition.
5. The sites for installing and maintaining an air conditioner using Refrigerant R32 should be free from open fire or welding, smoking, drying oven or any other heat source higher than 548˚C which easily produces open fire.
6. When installing an air condition, it is necessary to take appropriate anti-static measures such as wear anti-static clothing and/or gloves.
7. It is necessary to choose the site convenient for installation or maintenance wherein the air inlets and outlets of the indoor and outdoor units should be not surrounded by obstacles or close to any heat source or combustible and/or explosive environment.
8. If the indoor units has a refrigerant leak during the installation, all the personnel should go out till the refrigerant leaks completely for 15 minutes. If the product is damaged, it is a must to carry such damaged product back to the maintenance station and it is prohibited to weld the refrigerant pipe or conduct other operations on the user's site.
9. It is necessary to choose a place where the inlet and outlet air of the indoor unit is even.
10. It is necessary to avoid places where there are other electrical products, power switch plugs and sockets, kitchen cabinet, bed, sofa and other valuables right under the lines on two sides of the indoor unit, and also prevent mechanical damage from occurring.

General Specifications

Typical Unit Components and Dimensions

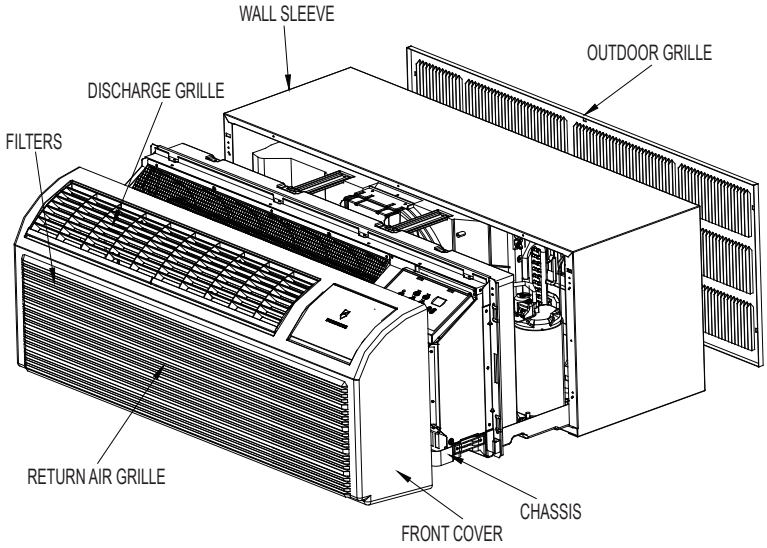

PDXWS Wall Sleeve
Dimensions: 16" H x 42" W x 13-¾" D
Front Cover Dimensions:
16" H x 42" W x 7-¾" D

Cut-Out Dimensions:
16-¼" x 42-¼"

PTAC/PTHP Model Identificiation Guide

MODEL NUMBER PV | H | 09 | K | 3 | F | C

Series
PV = Friedrich Digital PTAC

System
E = Cooling with electric heat
H = Heat Pump with Auxiliary Heat

Nominal Capacity
07=7,000 Btuh 12=12,000 Btuh
09=9,000 Btuh 15=15,000 Btuh

Voltage
K = 230/208V - 1 Ph. - 60 Hz.
R = 265V - 1 Ph. - 60 Hz.

Engineering Digit

Design Series

Chassis
F = FreshAire

Nominal Heater Size (230V or 265V)
3=3kW

Installation Checklist

- ❑ Inspect all components and accessories for damage before and after installation.
- ❑ Remove the cardboard wall sleeve support and grill weatherboard.
- ❑ Check for proper wall sleeve installation in accordance with the wall sleeve installation instructions.
- ❑ Check for a subbase kit or other means of structural support which is required for ALL installations projecting more than 8" into room.
- ❑ Install the recommended Condensate Drain Kits for complete condensate removal.
- ❑ Ensure that the chassis is installed in a 16" high x 42" wide wall sleeve that is no deeper than 13 ¾". A baffle kit is required if the sleeve exceeds that depth.
- ❑ Ensure that chassis and chassis front cover are installed and secured properly.
- ❑ Ensure that drapes, bed, bedspread, furniture, etc. DO NOT block either return or discharge air grilles.
- ❑ Inspect the condenser air inlet and outlet for any obstructions (shrubbery, etc).
- ❑ Ensure that 'reset' button is pressed on LCD device (only on cord connected models).

PTAC Installation Recommendations

For proper PTAC unit performance and maximum operating life refer to the minimum installation clearances below:

Figure 1

PTAC units should be installed no closer than 12" apart when two units are side by side. If three or more PTAC units are to operate next to one another allow a minimum of 36" between units. Also,a vertical clearance of 60" should be maintained between units installed. In the interior of the room the unit should be located a minimum of 1/4" from the floor and a minimum of 36" from the ceiling.

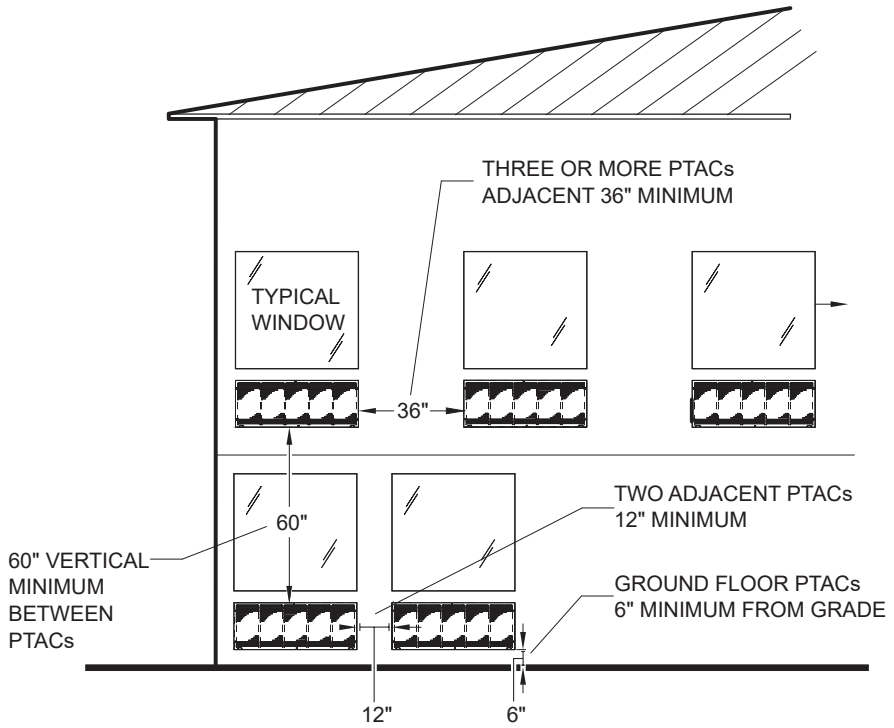

VIEW: OUTSIDE BUILDING ELEVATION

FRP001

For PTACs on the ground floor or anytime obstructions are present, use the following guidelines:

Figure 2

- For minor obstructions such as lamp poles or small shrubbery a clearance of 12" from the outdoor louver should be maintained.
- For major obstructions such as a solid fence, wall or other heat rejecting device like a condensing unit, a minimum distance of 36" should be kept.

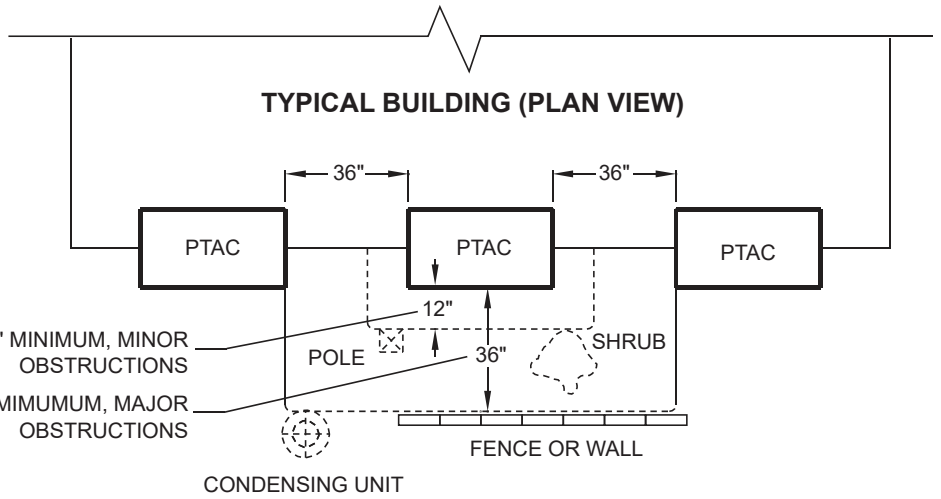

FRP002

The above suggestions are for reference only and do not represent all possible installations. Please contact Friedrich for information regarding affects of other installation arrangements. By following these simple recommendations you can be confident that your Friedrich PTAC will provide years of worry free operation.

Wall Sleeve Installation Instructions (PDXWSEZ/PDXWSA)

NOTE: If the wall covers are not purchased together, the user must purchase a wall cover that meets the G90 standard or salt spray test.
Insure that the unit is only installed in a wall structurally adequate to support the unit including the sleeve, chassis and accessories. If the sleeve projects more than 8" into the room, a subbase or other means of support MUST be used. Please read these instructions completely before attempting installation.

⚠WARNING

Falling Object Hazard

Not following Installation Instructions for mounting your air conditioner can result in property damage, injury, or death.

NOTICE

DO NOT allow any pitch toward the inside.

Flashing on all 4 sides of the opening is recommended.

Potential property damage can occur if instructions are not followed.

For Deep WallInstallation (Greater than 13 1/4")

See Page 15

The following instructions apply ONLY to walls less than 13 ¼" in depth.

1. The PXDR10 Drain Kit,(optional for new construction) see page 16 if applicable, must be installed before the wall sleeve is installed into the wall.
2. The External Drain (for new construction or unit replacement) see page 17 if applicable, must be installed before the wall sleeve is installed into the wall.
3. From inside the building, position the wall sleeve in the opening and push it into the wall until it protrudes at least ¼" on the outside (See Figure 9, Page 14).
4. Position the wall sleeve with a slight tilt towards the outside to facilitate condensate drainage. It should be level side-to-side and the front should be ¼ bubble higher than the back.

Figure 3

Typical Wall Sleeve Installation

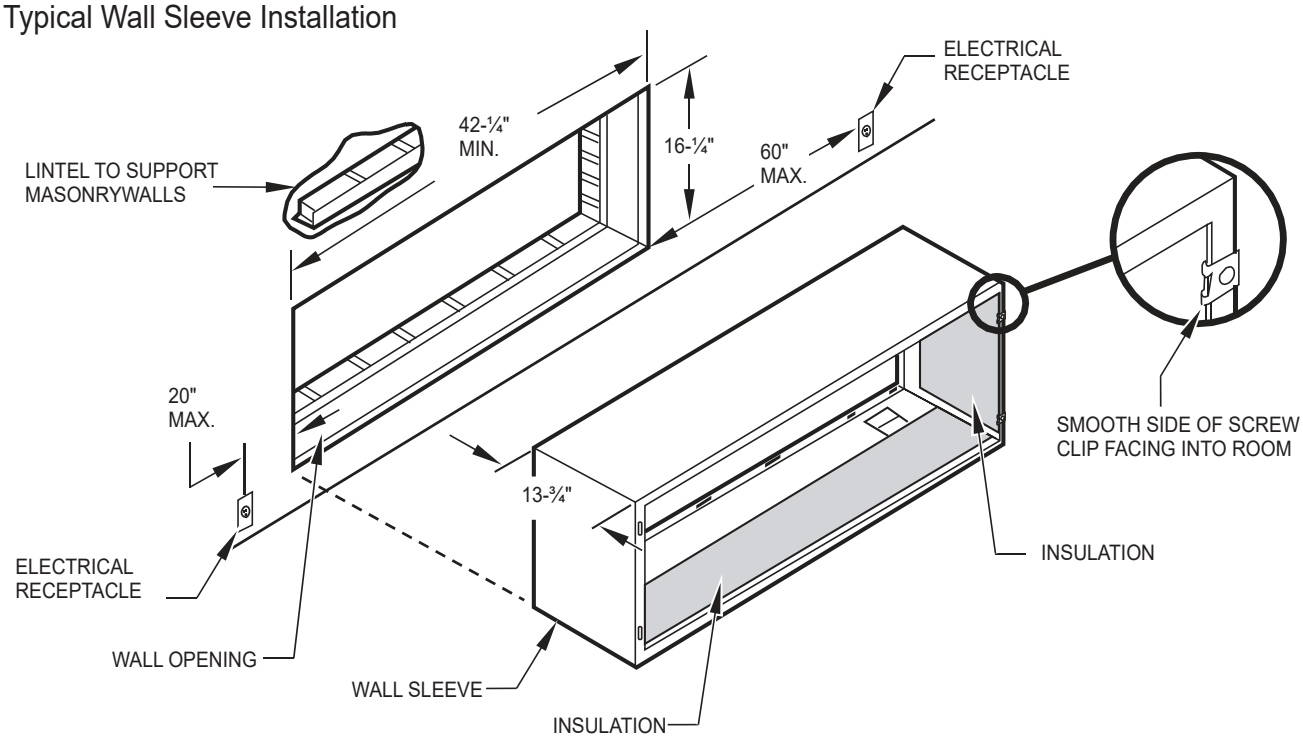

NOTE: All 230/208V units are manufactured with a 60" power cord and all 265V units with a 18" power cord.

FRP003

Alternate Wall Instalations

Figure 4
Panel Wall

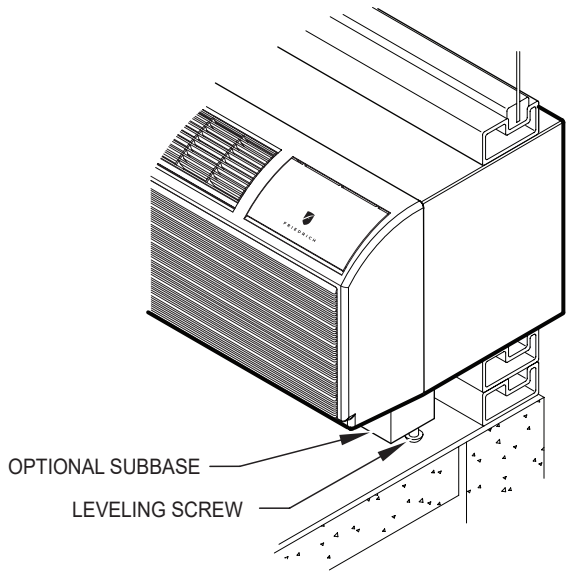

FRP004

Figure 6
Curtain Wall

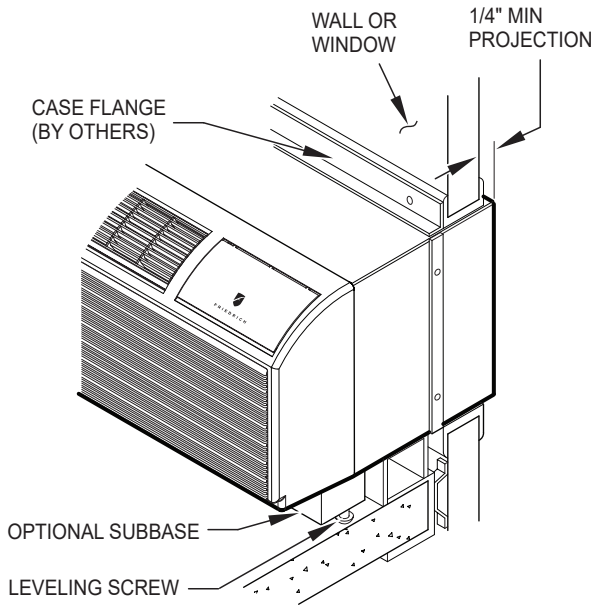

FRP006

Figure 5
Frame and Brick Veneer

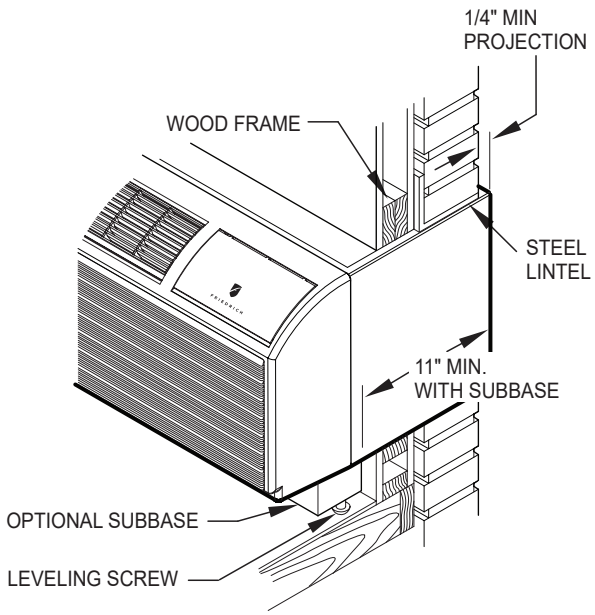

FRP005

Figure 7
Block and Brick Veneer

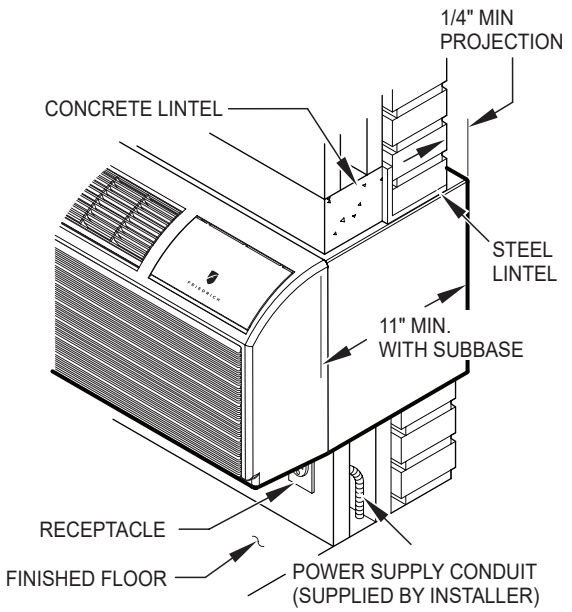

FRP007

NOTE: Follow all wall system manufacturer installation instructions. For sunrooms and modular buildings, adhere to their installation instructions for supporting and sealing sleeve to their frames. All wall and window/wall installations must provide for proper drainage. In applications where the drain holes on the PTAC wall sleeve are not exposed beyond the wall an internal drain system is recommended. It is the installer's responsibility to ensure there is adequate drainage for the PTAC unit.

Figure 8

Wall Sleeve Attachment

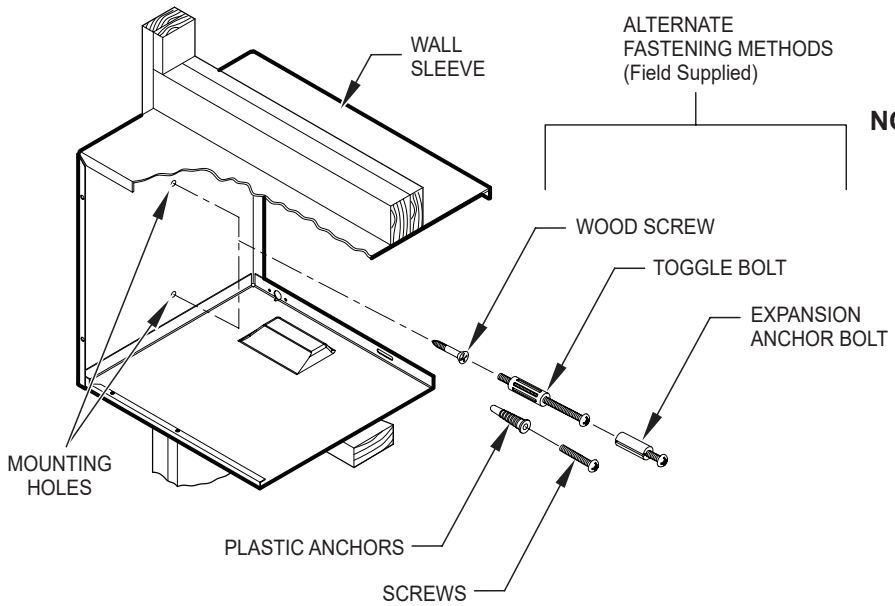

NOTE: The Wall Sleeve must be horizontally level (side-to-side) and pitched 1/4 bubble to the outside when installed in an opening.
The mounting hole location should be approximately 2-4" from the top and bottom of the sleeve.

FRP008

Figure 9

Dimensions

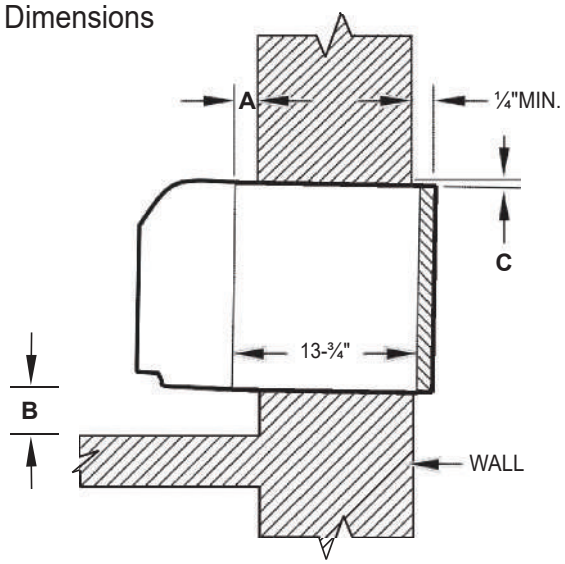

Dimension*	A Allow for wall finishing (Minimum)	B Allow for floor finishing Min.	 Max.	C Allow for proper drainage (Front-to-Back)
No Accessories	¼"	¼"	---	---
With Subbase	1-¾"	3-½"	5"	---
With Lateral Duct	¾"	¼"	---	---
Wall Sleeve Tilt	---	---	---	¼"

* If more than one accessory is to be used,use the maximum dimension. If the wall thickness is more than 13-¾" - (A+ ¼"), a sleeve extension must be used.

FRP009

5. Drill two 3/16" holes through each side of the sleeve approximately 4" from top and 4" from bottom of sleeve. Screw four #10 x 1" screws (included) or appropriate fasteners for your installation, through the holes in the sides of the wall sleeve.
6. Apply sealant around the wall sleeve where it projects through the inside and outside wall surfaces. Apply the sealant to the screw heads or the tops of the fasteners used in Step #5.
7. If the chassis and exterior grille are to be installed later, leave the weatherboard and center support in place, otherwise remove and dispose of them. (See Figure 13, Page 18).
8. Provide a support lintel if the wall sleeve is installed in a concrete or masonry wall (See Figure 10, Page 15).

Figure 10
Lintel Installation

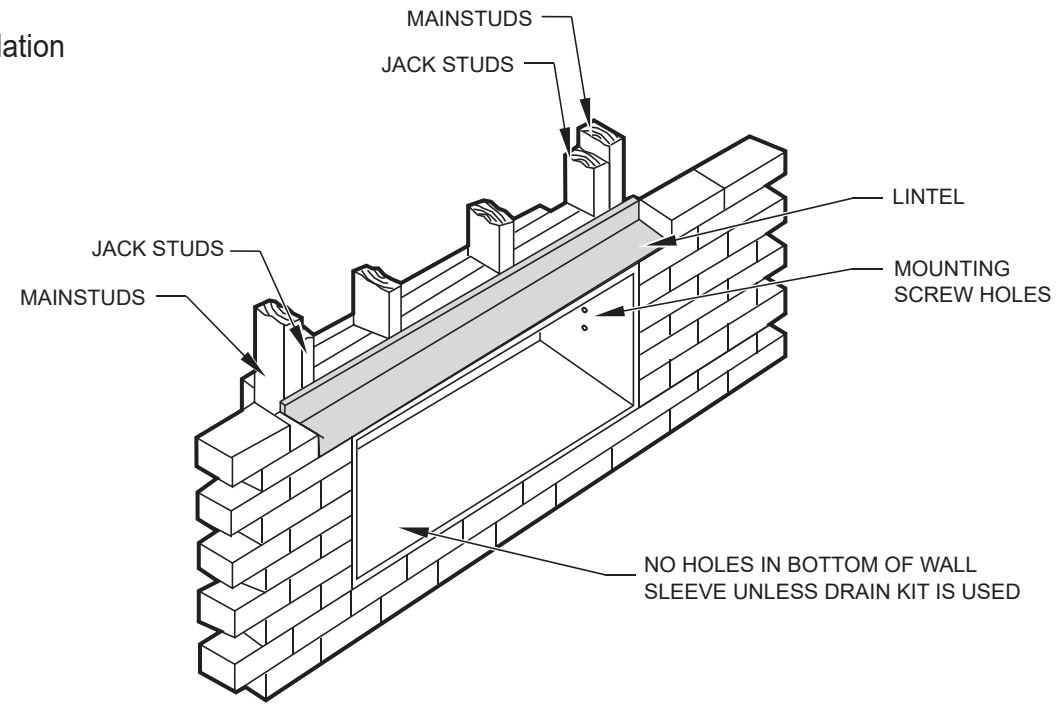

NOTE: Construct wall opening to comply with all applicable building codes.

FRP010

One-Piece Deep Wall Sleeve Installation (PDXWSEXT)

If the wall is thicker than 13 1/4" a deep wall sleeve or wall sleeve extension MUST be used. The deep wall sleeve may be special ordered through your Sales Representative.

PXDR10 Drain Kit Installation Instructions (optional for new construction)

NOTE: Determine whether drain will be located within the wall, on the indoor side, or will drain to the exterior of the building. Follow appropriate instructions below depending on your particular type of installation.

Internal Drain

NOTE: If installing an internal drain, you MUST install a drain kit on the wall sleeve before the wall sleeve is installed.

1. Refer to Figure 11 and locate the drain within the "Preferred" area of best drainage.Maintain at least a ½" clearance from the embossed area.
2. Using the mounting plate with the ½" hole as a template, mark and drill two, 3/16" mounting holes and a ½" drain hole in the sleeve bottom.
3. Remove the backing from the gasket and mount it on the flat side of the mounting plate (See Figure 12, Page 17). Insert the drain tube through the hole in the gasket and mounting plate so the tube flange will be against the wall sleeve.
4. Position the assembly beneath the drilled holes and secure it with #10-24 x ½" machine screws and lock nuts provided. Seal the tops of the screws with silicone caulking.
5. Use ½" I D copper tube, PVC pipe, or vinyl hose (obtained locally) to connect the internal drain tube to the drain system in the building.
6. Referring to Figure 12, Detail A, Page 17, locate and assemble the two cover plates and gaskets over the drain holes at the rear of the wall sleeve. Attach them with the #10 sheet metal screws provided. Make certain that the four overflow slots at the rear of the wall sleeve are not blocked (See drawing of the back of the sleeve Figure 12, Page 17).
7. If a deep wall extension (PDXWSEXT) is used, after installing the field supplied flashing,caulk as required. Be sure to caulk around the flashing and the wall sleeve where the hole was drilled for the drain tube.

Figure 11
Drain Kit Location and Installation

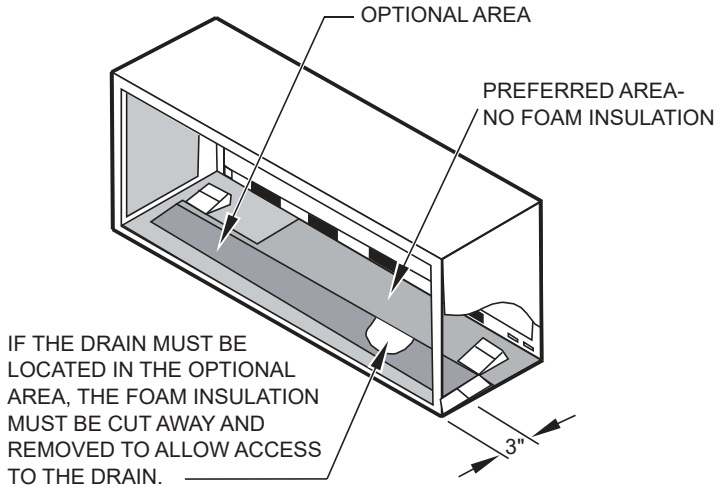

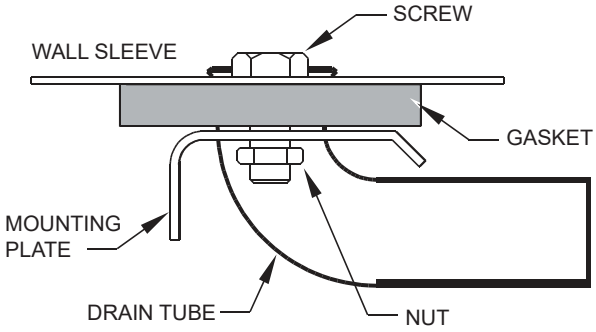

SIDE VIEW

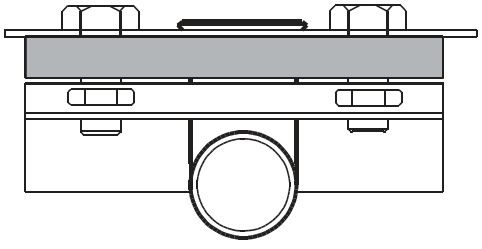

FRONT VIEW

FRP011

PXDR10	
QUANTITY	**DESCRIPTION**
2	COVER PLATES
1	MOUNTING PLATE
1	DRAIN TUBE
3	MOUNTING PLATE GASKET
4	#10 X ½" SHEET METAL SCREWS
2	#10-24 X ½" MACH. SCREWS
2	#10-24 X ½" LOCKNUTS

External Drain (for new construction or unit replacement)

When using an external drain system, the condensate is removed through either of two drain holes on the back of the wall sleeve. Select the drain hole which best meets your drainage situation and install the drain kit. Seal off the other with a cover plate.

Drain Tube Installation (See Figure 12)

1. Peel the backing tape off the gaskets and apply the sticky side to one cover plate and one mounting plate as shown in Details A and B.
2. Place the drain tube through the gasket and the mounting plate with the flange toward the wall sleeve.
3. Attach the drain tube assembly to one of the two drain holes at the rear of the wall sleeve. The large flange on the mounting plate is positioned at the bottom of the sleeve facing toward the sleeve, Detail B. When the drain tube is positioned at the desired angle, tighten the screws.

Cover Plate Installation

4. Mount the foam gasket to the cover plate. Using two #10 x ½" sheet metal screws (provided), attach the cover plate to the remaining drain hole. Make certain the large flange on the plate is positioned at the bottom of the sleeve.
5. Discard the additional cover plate, gasket, machine screws, and locknuts.

NOTICE

If the wall sleeve has not been installed, the drain tube must be rotated to a horizontal position until after the sleeve is installed. Tighten the mounting plate screws when the tube is in the proper position. Make certain that the four overflow slots at the rear of the wall sleeve are not blocked (See Figure 12).

When sealing the sleeve on the outside of the building, be careful NOT to let the sealant block the two condensate drain holes or the four overflow slots at the bottom flange of the sleeve

Potential property damage can occur if instructions are not followed.

Figure 12
Drain Kit Installation

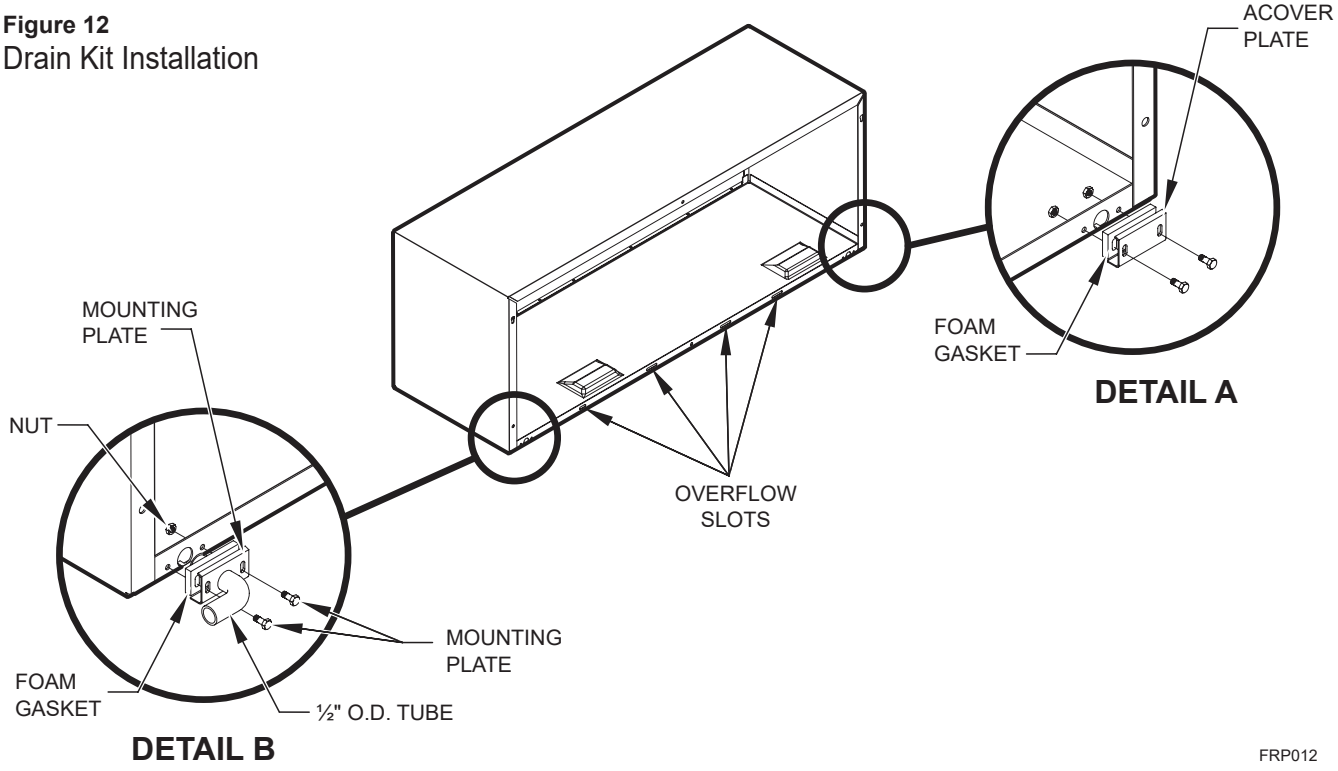

NOTE: The large flange on the mounting plate is positioned at the bottom of the sleeve facing toward the sleeve. The drain tube must be rotated to a horizontal position to allow for the wall sleeve to be installed into the wall. Once the wall sleeve is installed, return the drain tube to a downward angle.

PXGA Standard Grille Installation Instructions

1. Remove the center support and weatherboard if still installed in the sleeve.
2. Insert six plastic grommets into the grille openings from the outside of the grille as shown in Figure 13.
3. Insert two #8 x ⅜" sheet metal screws (provided) in the top two outside edge plastic grommets, and tighten them half way into the grommets.
4. Grasp the grille by the attached plastic handles. Position it with the condensate drain knockouts facing down.

   From inside the building, maneuver the grille through the wall sleeve and pull toward you until the screw heads are inserted into the keyhole slots at the top of the wall sleeve. Tighten the two screws completely.
5. Insert the remaining screws into the remaining holes and tighten securely.

⚠ WARNING

Falling Object Hazard

Not following Installation Instructions for mounting your air conditioner can result in property damage, injury, or death.

Figure 13
Standard Grille

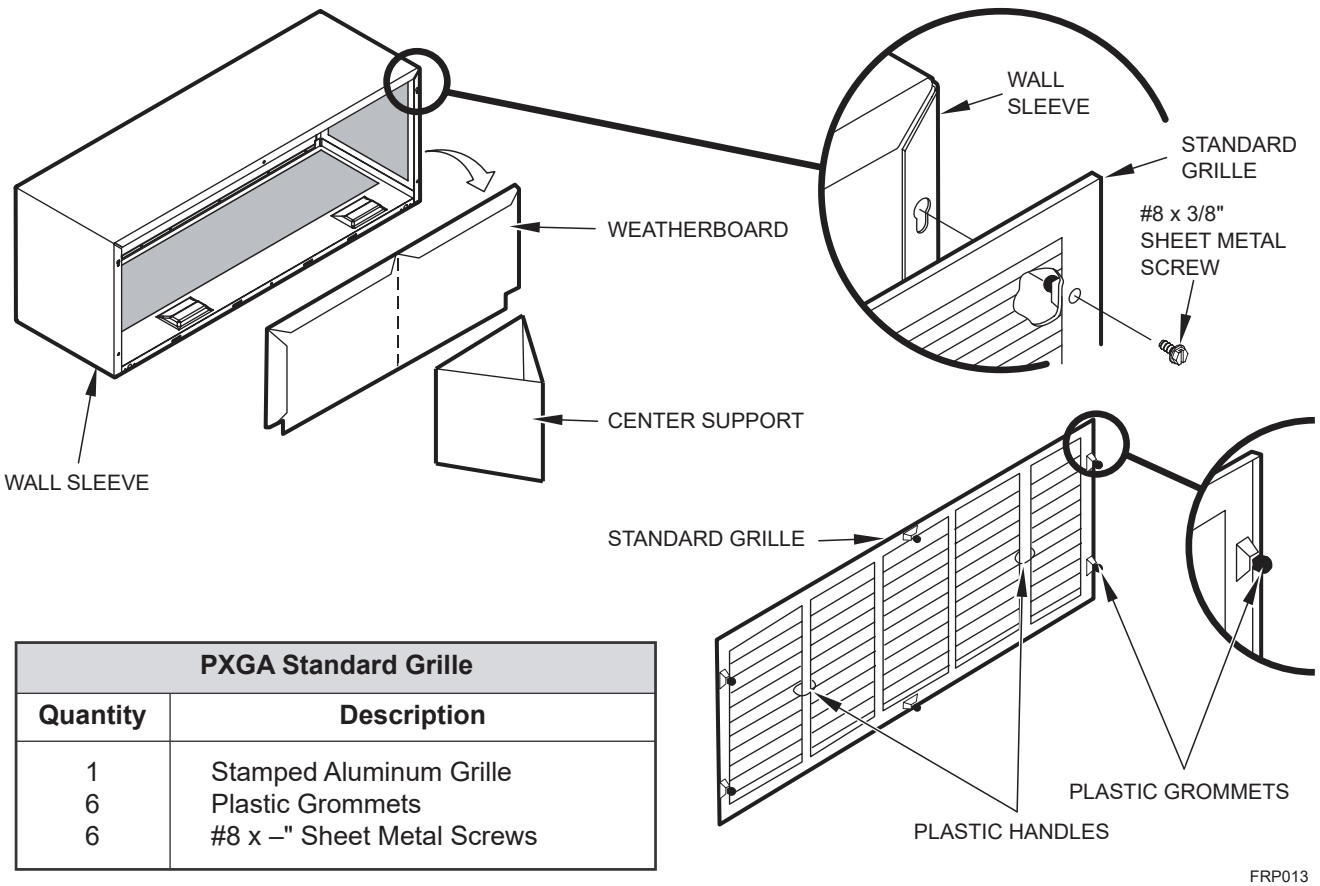

PXGA Standard Grille	
Quantity	**Description**
1	Stamped Aluminum Grille
6	Plastic Grommets
6	#8 x –" Sheet Metal Screws

A. Electrical Rating Tables

All units are equipped with standard power cords.

Table 1 Electrical Ratings and Heater Data

MODEL	HEATER kW	Power Cord Kit	Voltage	BRANCH CKT AMPS	MCA	Watts	Cord length	Receptacle	
PVH09K	2.5(optional)	PXPCFA23015	230/208	15	13.9	2500	67"	NEMA 6-15r	
PVH12K	1.5(optional)	PXPCFA23020	230/208	20	13.9	2500		NEMA 6-15r	
PVH09R	2.5(optional)	PXPCFA26515	265	15	12.0	2500	18"	NEMA 7-15r	
PVH12R	1.5(optional)	PXPCFA26515	265	15	7.3	1500		NEMA 7-15r	
PVH09K	3.5(default)	PXPCFA23020	230/208	20	19.9	3600	67"	NEMA 6-20r	
PVH12K	3.5(default)	PXPCFA23020	230/208	20	19.9	3600		NEMA 6-20r	
PVH09R	3.5(default)	PXPCFA26520	265	20	16.8	3500	18"	NEMA 7-20r	
PVH12R	3.5(default)	PXPCFA26520	265	20	16.8	3500		NEMA 7-20r	
PVH12K	5.0(optional)	PXPCFA23030	230/208	30	27.5	5000	67"	NEMA 6-30r	
PVH12R	5.0(optional)	PXPCFA26530	265	30	23.8	5000	18"	NEMA 7-30r	

Note: Standard power cord installed on each unit (9-12k-3.5KW). Adjustable heater size shown in chart above. Note 30A cord not compatible with the 9k unit.
Note: Use copper conductors only. Wire sizes are per NEC. Always follow local and national codes.
Note: Use on a single dedicated branch circuit within specified amperage rating.

⚠ WARNING

Electrical Shock Hazard

Turn off electrical power before service or installation.
ALL electrical connections and wiring **MUST** be installed by a qualified electrician and conform to the National Code and all local codes which have jurisdiction.
Failure to do so can result in property damage, personal injury and/or death.

FUSE/CIRCUIT BREAKER	Use ONLY type and size fuse or HACR circuit breaker indicated on unit's rating plate. Proper current protection to the unit is the responsibility of the owner. NOTE: A time delay fuse is provided with 265V units.
GROUNDING	Unit MUST be grounded from branch circuit through service cord to unit, or through separate ground wire provided on permanently connected units. Be sure that branch circuit or general purpose outlet is grounded. The field supplied outlet must match plug on service cord and be within reach of service cord. Refer to Table 1 for proper receptacle and fuse type. Do NOT alter the service cord or plug. Do NOT use an extension cord.
RECEPTACLE	The field supplied outlet must match plug on service cord and be within reach of service cord. Refer to Table 1 for proper receptacle and fuse type. Do NOT alter the service cord or plug. Do NOT use an extension cord.

B. Power Cord Information (230/208V models only)

All Friedrich 230/208V PTAC units are shipped from the factory with a Leakage Current Detection Interrupter (LCDI) equipped power cord. The LCDI device meets the UL and NEC requirements for cord connected air conditioners effective August 2004.

To test your power supply cord:

1. Plug power supply cord into a grounded 3 prong outlet.
2. Press RESET.
3. Press TEST (listen for click; Reset button trips and pops out).
4. Press and release RESET (listen for click; Reset button latches and remains in). The power supply cord is ready for operation.

NOTE: The LCDI device is not intended to be used as a switch. Once plugged in the unit will operate normally without the need to reset The LCDI device.

If the LCDI device fails to trip when tested or if the power supply cord is damaged it must be replaced with a new supply cord obtained from the product manufacturer, and must not be repaired.

Figure 14
Typical LCDI Devices

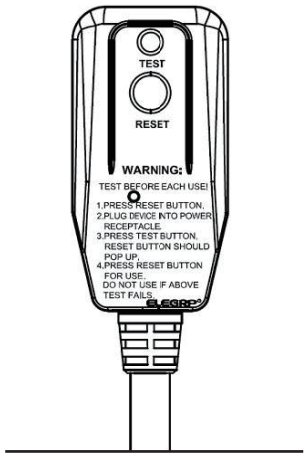

15/20A/30A LCDI Device

FRP014

Electrical Wiring for 265 Volt Models

Power Cord Installation

All 265V PTAC/PTHP units come with a factory installed non-LCDI power cord for use in a subbase. If the unit is to be hard-wired refer to the instructions below.

NOTE: It is recommended that the PXSB subbase assembly, the PXCJA conduit kit (or equivalent) be installed on all hardwire units. If installing a flush-floor mounted unit, make sure the chassis can be removed from the sleeve for service and maintenance.

⚠ WARNING

Electrical Shock Hazard

Turn off electrical power before service or installation.
ALL electrical connections and wiring **MUST** be installed by a qualified electrician and conform to the National Code and all local codes which have jurisdiction.
Failure to do so can result in property damage, personal injury and/or death.

To install the line voltage power leads and conduit to chassis, follow the instructions below.

1. Follow the removal process of the chassis's junction box.
2. Prepare the 265V(or 230V)power cord for connection to the chassis' power cord connector by cutting the cord to the appropriate length (refer to Figure16 and follow Figure15). Power cord harness selection shown on Table 2 on page 20.

Figure 15

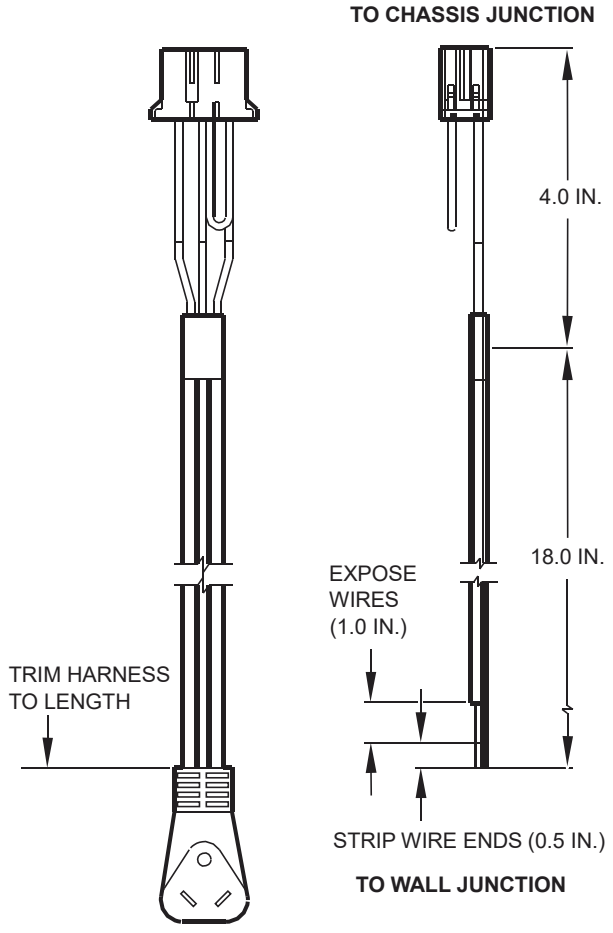

3. Route the cut ends of harness through the conduit connector assembly and flex conduit sleeve. Be sure to use the supplied conduit bushing to prevent damage to the cord by the conduit. The cord should pass through the Locknut, Spacer, Chassis Junction Box, Conduit Connector, Bushing, then the Conduit Sleeve. See Figure 17.

4. Route the cut ends of the power cord through the elbow connector at the other end of the conduit. Tighten screws on elbow connect or to secure conduit sleeve.

5. Fasten and secure the elbow connector to the wall junction box cover with locknut. Place and mount the wall junction box withthe four wall mounting screws making sure to pass the wall lines through the junction box. Connect and join all wall lines with the stripped ends using wire nuts. Tighten both screws of the wall junction box cover to junction box.

Figure 16

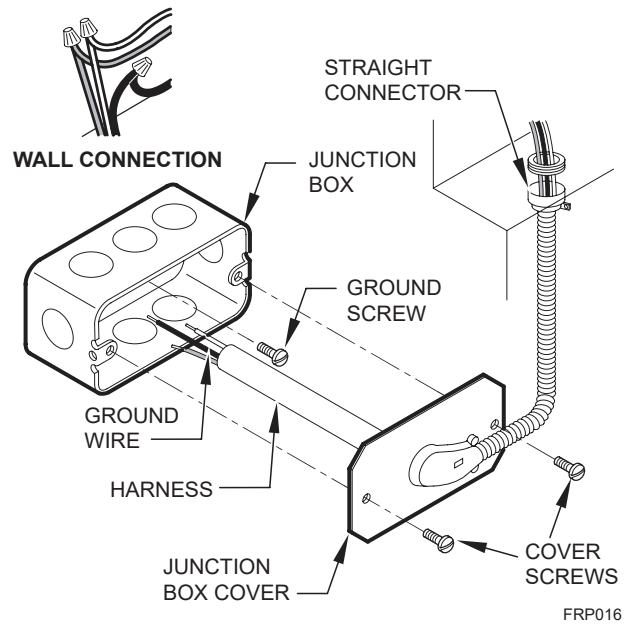

Figure 17

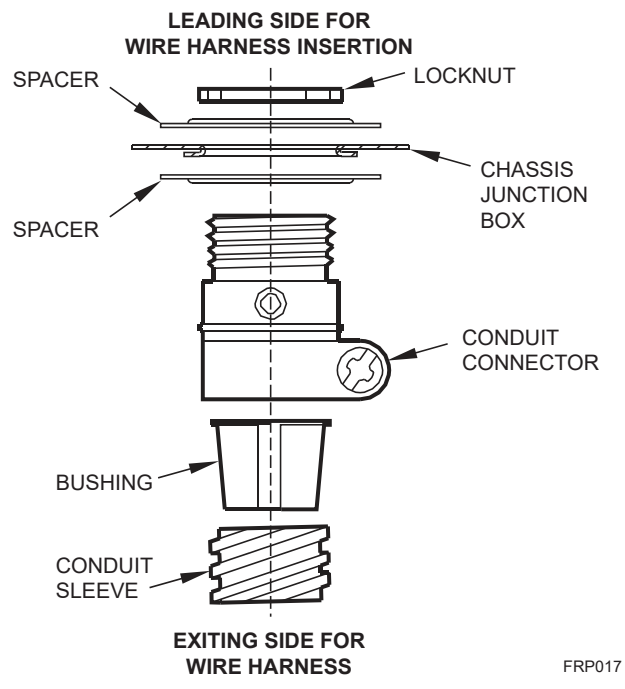

Chassis Install Preparation

Checkto be sure the wall sleeve,extension (if used), grille, and drain kitare installed properly before chassis installation.

1. Remove the weatherboard and center support from the sleeve (if still in place). Be sure an outdoor grille is attached.

Figure 18

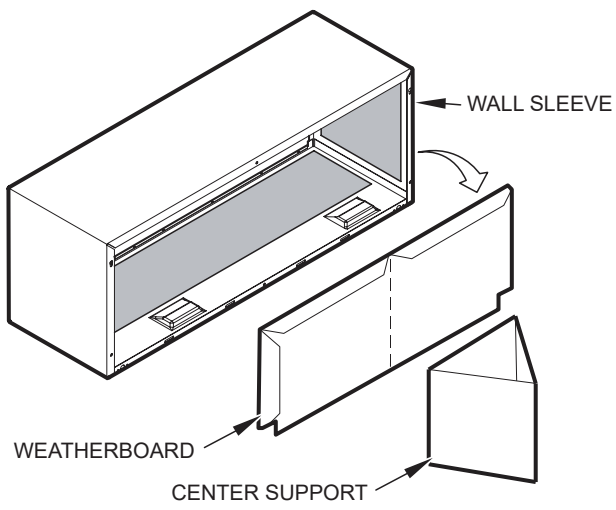

FRP018

NOTE: Use a wall sleeve adapter kit (PXSE) if installing a P-Series chassis in a T-Series sleeve.

⚠WARNING

Suffocation Hazards

Keep bag away from babies and children.

Do NOT use in cribs, beds or playpens. Destroy immediately after opening. This bag is NOT a toy.

Failure to do so can result in personal injury and/or death.

2. Remove the front cover contained in a protective plastic bafrom chassis. Remove the bag and dispose of it properly.

   If the control door is not installed, follow these steps:
   a. From the front cover, slide the right control door pin into the hole on the right side of the front cover.
   b. Slide the left door pin into the hole on the left side of the front cover opening.
   c. Snap cover into place.

NOTE: To avoid breaking the door or hinge pins, do not apply excessive force when installing.

Figure 19

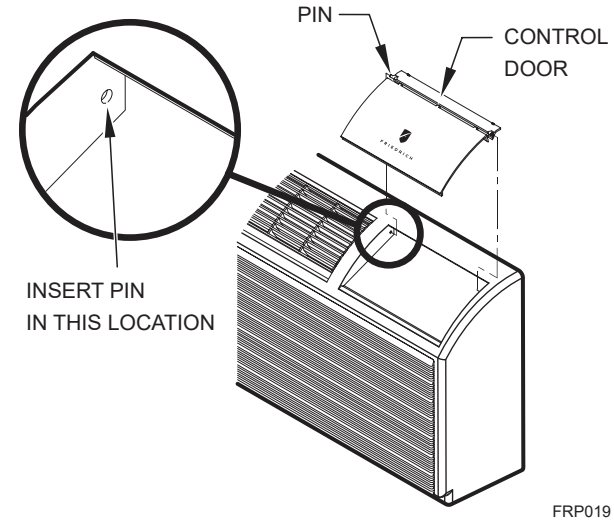

FRP019

IMPORTANT: When installing a Friedrich PTAC into an existing sleeve, it is important to ensure that the unit is installed completely. Inspection of the air seal between the condenser air baffles and around the indoor mounting flange is recommended.

In some cases additional gaskets or baffling may be required.

CAUTION

Unit Damage Hazard

Failure to follow this caution may result in equipment damage or improper operation.

3. Carefully remove shipping tape from the front panel and vent door. See Figure 20.

Figure 20
Shipping Tape Location

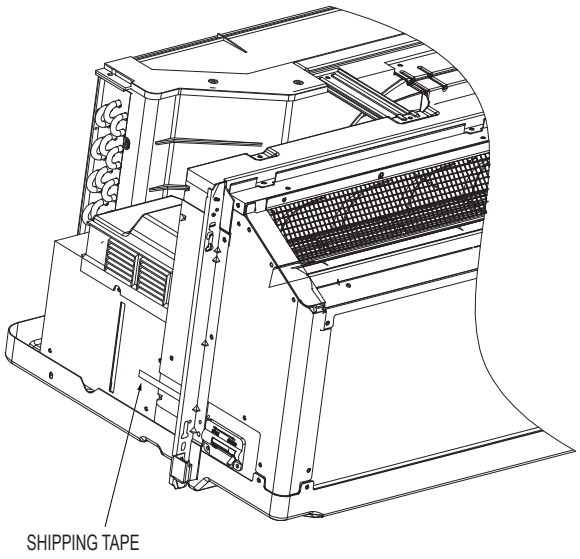

4. Remove shipping screw from the vent door, if present. See Fig 21.

Pull out at the bottom to release it from the tabs (1). Then lift up (2).

NOTE: If the unit is mounted flush to the floor, the service cord MUST be rerouted at the bottom of the front cover on the side closest to the receptacle. A notch MUST be made in the front cover side where the cord exits the unit. It is the responsibility of the installer to create an exit notch.

Figure 21
Removing Front Panel

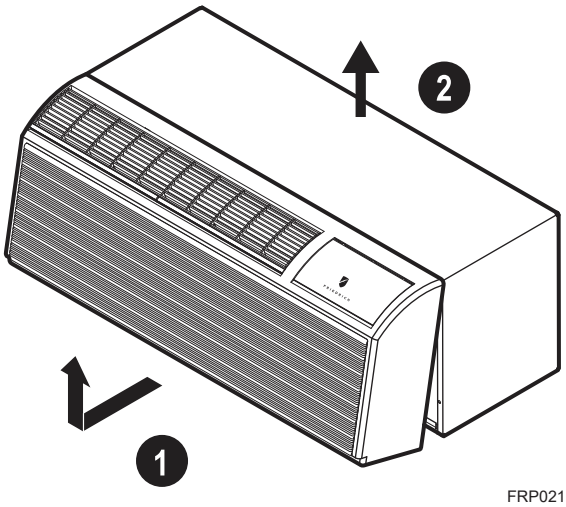

Chassis Installation

1. Lift unit level and slide unit into wall sleeve until seal rests firmly against front of wall sleeve.

Figure 22
Securing Unit

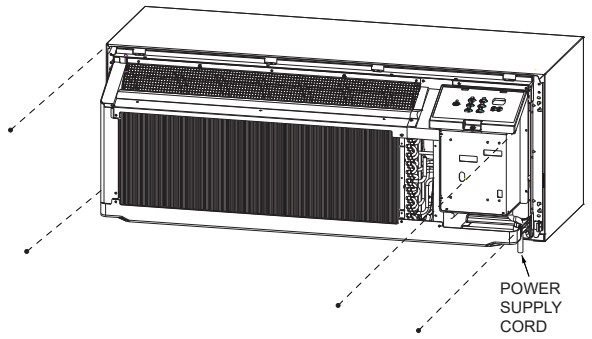

2. Locate the four supplied chassis mounting screws.Insert the screws through the chassis mounting flange holes that are aligned with the speed nuts in the wall sleeve. Tighten all four screws (two per side).

Figure 23
Replacing Front Panel

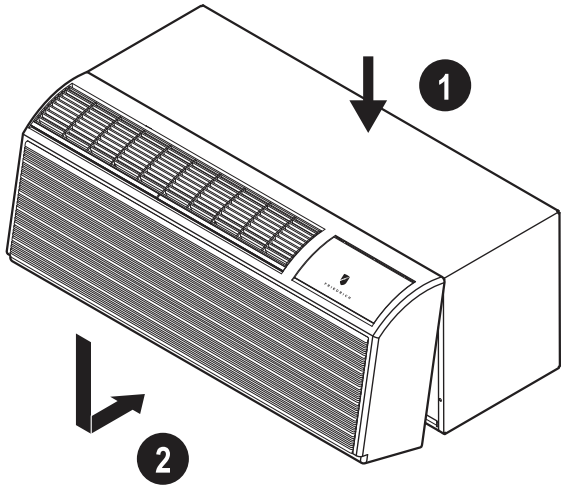

3. Place tabs over top rail (1).Push inward at bottom until panel snaps into place (2).
4. Reinstall front panel. See Figure 23.

⚠ CAUTION

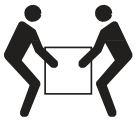

Excessive Weight Hazard

Use two or more people when installing your air conditioner.

Failure to do so can result in back or other injury.

NOTICE

Copper refrigerant tubes are NOT handles.
Do NOT use tubing to lift or move chassis.

To remove the front cover,pull the bottom end forward and lift it up to clear the L bracket across the top of the chassis.

5. Plug the cord (if applicable) into the appropriate receptacle. Restore power to the unit.

Friedrich PTAC Digital Control and Unit Features

The new Friedrich digital PTAC has state of the art features to improve guest comfort, indoor air quality and conserve energy. Through the use of specifically designed control software for the PTAC industry Friedrich has accomplished what other Manufacturer's have only attempted – a quiet, dependable, affordable and easy to use PTAC. Below is a list of features and their benifit to the owner.

ONLY TWO MODELS	With only two models in both 230/208V and two in 265V ranging from 5,800btu – 15,500btu, the FreshAire PTAC meets your needs without the complicated buying decisions.
BETTER DEHUMIDIIFICATION	With longer run times, the indoor coil stays colder longer resulting in better overall dehumidification outside of standard conditions.
SOFT START OPERATION	With the benefit of an inverter compressor there is no longer a sudden and noisy start up of compressors. Compressor starts up slowly gradually ramping up to the required speed to control the conditioned space.
MERV 8 OUTDOOR AIR FILTER	Some applications require the use of a wall-mounted thermostat. All-new FreshAire® PTACs may be switched from unit control to remote thermostat control easily without the need to order a special model or accessory kit.
DC INVERTER	FreshAire PTACs utilize a DC inverter rotary compressor to ensure part load efficiencies and reliable operation.
REMOTE THERMOSTAT OPERATION	Some applications require the use of a wall-mounted thermostat. All new Friedrich PTACs may be switched from unit control to remote thermostat control easily without the need to order a special model or accessory kit.
INTERNAL DIAGNOSTIC PROGRAM	The Friedrich digital PTAC features a self-diagnostic program that can alert maintenance to component failures or operating problems. The internal diagnostic program saves properties valuable time when diagnosing running problems.
ELECTRONIC TEMPERATURE LIMITING	By limiting the operating range, the property can save energy by eliminating "max cool" or "max heat" situations common with older uncontrolled systems. The new electronic control allows owners to set operating ranges for both heating and cooling independently of one another.
ROOM FREEZE PROTECTION	When the PTAC senses that the indoor room temperature has fallen to 50°F, the unit will cycle on the fan (high) and the electric strip heat to raise the room temperature to 55°F, and then cycle off again. This feature works regardless of the mode selected and can be turned off.
CONDENSATE REMOVAL SYSTEM	Condenser fan utilizes slinger ring technology to pick up condensate from the base pan and disperse it on to the condenser coil where it evaporates. This helps to cool the coil and increase the energy efficiency of the unit.
UNIVERSAL ELECTRIC HEATER	Unit has a universal power cord with a 20 amp configuration standard out of the box.
FACTORY RUN-TEST	All units are factory run tested to ensure trouble free operation.

DIGITAL DEFROST THERMOSTAT	The PV-Series uses a digital thermostat to accurately monitor the outdoor coil conditions to allow the heat pump to run whenever conditions are correct. Running the PTAC in heat pump mode saves energy and reduces operating costs. The digital thermostat allows maximization of heat pump run time.
INSTANT HEAT HEAT PUMP MODE	Heat pump models will automatically run the electric heater to quickly bring the room up to temperature when initially energized, then return to heat pump mode. This ensures that the room is brought up to temperature quickly without the usual delay associated with heat pump units.
SEPARATE HEAT/COOL FAN CYCLE CONTROL	The owner may choose between fan cycling or fan continuous mode based on property preference. Fan continuous mode is used to keep constant airflow circulation in the room during all times the unit is 'ON'. Fan cycle will conserve energy by only operating the fan while the compressor or electric heater is opera ing. The ability to set the fan cycling condition independently between heating and cooling mode will increase user comfort by allowing the choice of only constantly circulating air in the summer or winter time (unlike other PTAC brands that only allow one selection).
EMERGENCY HEAT OVERRIDE	In the event of a compressor failure in heat pump mode, the compressor may be locked out to provide heat through the resistance heater. This feature ensures that even in the unlikely event of a compressor failure, the room temperature can be maintained until the compressor can be serviced.
CENTRAL DESK CONTROL READY (ONLY FOR UNIT CONTROL)	All Friedrich digital PTACs have low voltage terminals ready to connect a central desk control energy management system. Controlling the unit from a remote location like the front desk can reduce energy usage and requires no additional accessories on the PTAC unit.
INDOOR COIL FROST SENSOR	The frost sensor protects the compressor from damage in the event that airflow is reduced or low outdoor temperatures cause the indoor coil to freeze.
ULTRAQUIET AIR SYSTEM	The PV-Series units feature an indoor fan system design that reduces sound levels without lowering airflow or preventing proper air circulation.
HIGH EFFICIENCY	The Friedrich PTAC has been engineered so that all functional systems are optimized so that they work together to deliver the highest possible performance.
DUAL MOTOR	The dual-motor design means that the indoor motor can run at slower speeds which reduces sound levels indoors.
ROTARY COMPRESSOR	High efficiency rotary compressors are used on all Friedrich PTACs to maximize durability and efficiency.
TOP-MOUNTED AIR FILTERS	All Friedrich PTAC return air filters and PXFTB replacement filter kits are washable, reusable and easily accessed from the top of the unit without the removal of the front cover.
FILTERED FRESH AIR INTAKE	Friedrich PTAC units are capable of introducing either 20 or 52 CFM outside air into the conditioned space. The outdoor air passes through a washable mesh screen to prevent debris from entering the airstream.
ALUMINIUM ENDPLATES	Outdoor coil endplates made from aluminium reduce corrosion on the outdoor coil common with other coil designs.
R-32 REFRIGERANT	Friedrich PTAC units use environmentally-friendly refrigerant.
BREAK-PROOF CONTROL DOOR	Break-proof control door design maintains the integrity of the unit.
GALVANIZED ZINC WALL SLEEVE AND BASE PAN	Galvanized zinc coated steel wall sleeve and steel base pan undergo an 11-step preparation process, are powder coated with a polyester finish and cured in an oven for exceptional durability.

System Configuration

Fresh Air Vent Control

To operate the FreshAire module please see Dip switch #3. With dip switch in the "on" position FreshAire module will be on continuously. With dip switch in the "OFF" position FreshAire module will be not be activated.

Figure 25
Air Vent Control Location

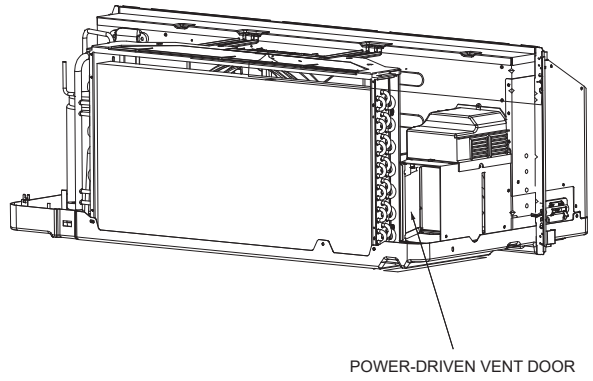

FRP025

Adjusting Air

To adjust air direction:

1. Remove front panel. See Figure 26.
2. Remove louver screws that hold louver insert in place (from back side of front panel). See Figure 26.
3. Turn louver insert and rotate180°. See Figure 27.
4. Replace louver insert.
5. Replace screws and front panel.

Figure 26
Backside of Front Panel

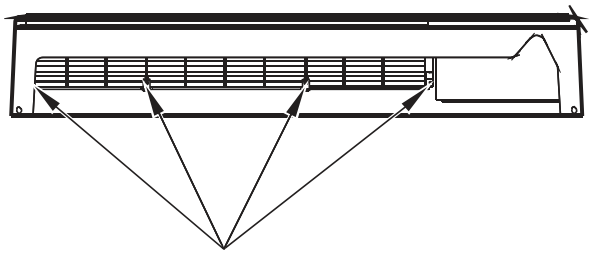

FRP026

Figure 27
Adjusting Louvers

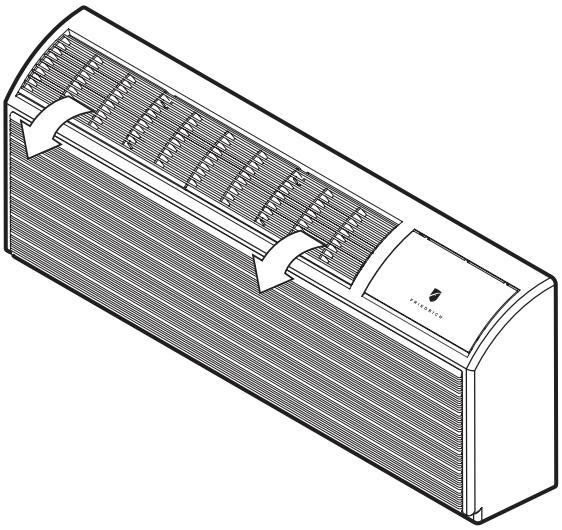

AIR DISCHARGE OUTWARD (Default)

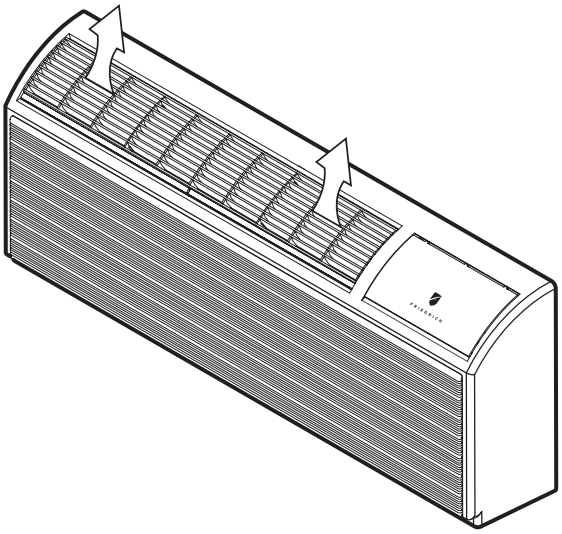

AIR DISCHARGE UPWARD

FRP027

Digital Control User Input Configuration

The adjustable control dip switches are located at the front portion of the digital Smart Center. The inputs are only visible and accessible with the front cover removed from the PTAC.

Dip Switch Setting

Switch 1 - Reserved.

Switch 2 - Heat pump enable/disable.

Moving Dip Switch #2 to "OFF" can be set as Emergency Heat Override. In the unlikely event of a compressor failure, a heat pump unit may be switched to operate in only the electric heat mode until repairs can be made.

Switch 3 - Electric strip enable/disable.

Switch 4 - Humidity control fresh air enable/disable

The factory setting is enabled, moving Dip switch 4 to ON and when the user uses VRPXEMRT4 or VRPXEMWRT4 controller, the unit can control the fresh air on and off according to the indoor humidity; when the Dip switch is set to OFF, the indoor humidity can't control the fresh air on/off.

Switch 5 - Room Freeze Protection Units are shipped from the factory With the room freeze protection enable.Room Freeze Protection can b e switched off at the owner's preference by moving Dip Switch 5 to "OFF". This fea ture will monitor the indoor room conditions and in the event that the room f al ls below 50°F, the unit will automatically run "heating". This occurs regardless of mode.

Switch 6 - Electric memory enable/disable

The factory setting is enabled. The smart center will remember user's setting. After power cut recovery, the unit will operate the same status as before power cut. Moving Dip Switch 6 to "OFF"will disable this feature, s mart center will no more remember settings.

Switch 7, **Switch 8** - Reserved.

Figure 28

Dip Switches

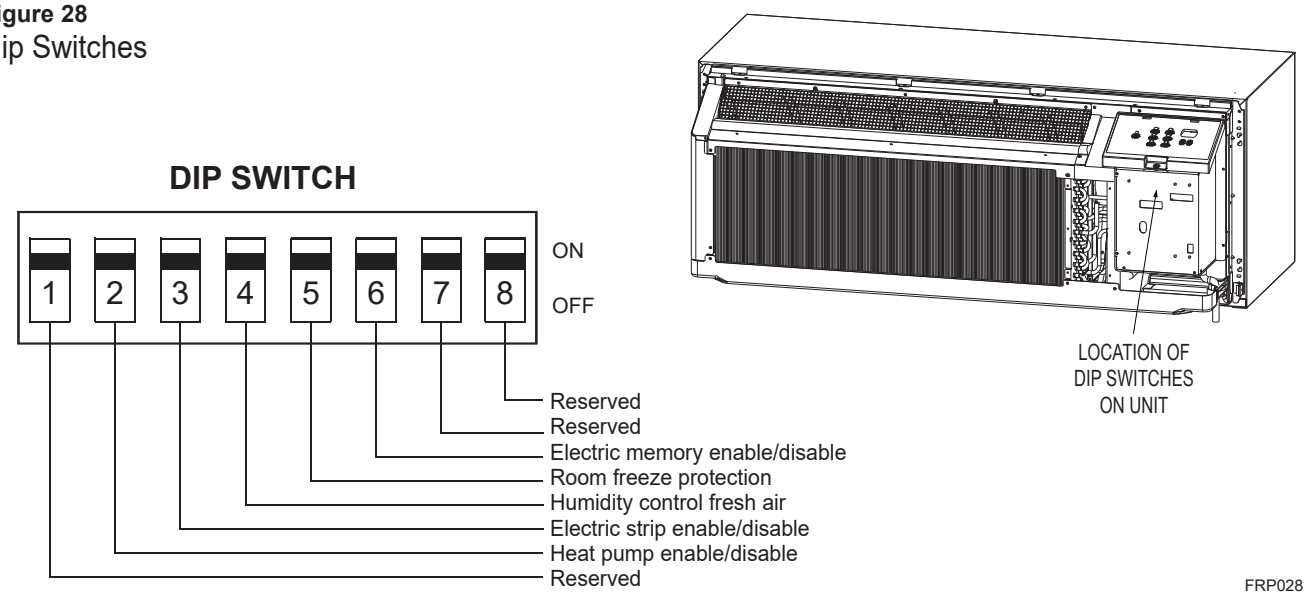

Switch	Description	Function	Factory Setting	Option
#1	Reserved	/	OFF	/
#2	Heat pump	ON-enable heat pump; OFF-disable heat pump, run electric heat only.	HP models-ON Electric heat only-OFF	OFF-Overrides compressor operation(HP modes only)
#3	Electric strip	ON-enable electric heat; OFF-disable electric heat.	ON	Factory set. Do not change.
#4	Heating priority	ON-Heat pump prior. OFF-Electric heating prior.	OFF	OFF
#5	Room Freeze Protection	ON-Allows the unit to ensure the indoor room temperature does not fall below 50°F even when turned off; OFF-disable freeze protection.	ON	OFF
#6	Electric memory enable/disable	ON-enable; OFF-disable.	ON	OFF
#7	Reserved	/	OFF	/
#8	Reserved	/	OFF	/

FreshAire System
SW3 DIP SWITCH

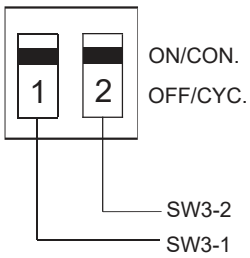

	Engagement Method	Mode	Description
FreshAire System	SW3-1	ON / OFF	Fresh-Air Fan runs only when Dip Switch is set to ‘ON’
			Fresh-Air Fan NEVER RUNS when Dip Switch is set to ‘OFF’
	SW3-2	Cycle / Continuous	Fresh-Air Fan runs continuously when SW3-1 is set to 'ON' & SW3-2 is set to 'ON'
			Fresh-Air Fan cycles On/Off with the Unit Indoor Fan when SW3-1 is set to 'ON' & SW3-2 is set to 'OFF'

FreshAire Fan Speed
SW4 SWITCH

	Engagement Method	Mode	Description
FreshAire Fan Speed	SW4	High (Default) /Low	When SW4 is placed in the "high" position the fresh air fan will introduce up to 52 cfm of make-up air.
			When SW4 is placed in the "low" position the fresh air fan will introduce up to 20 cfm of make-up air.

CIRCUIT DIAGRAM

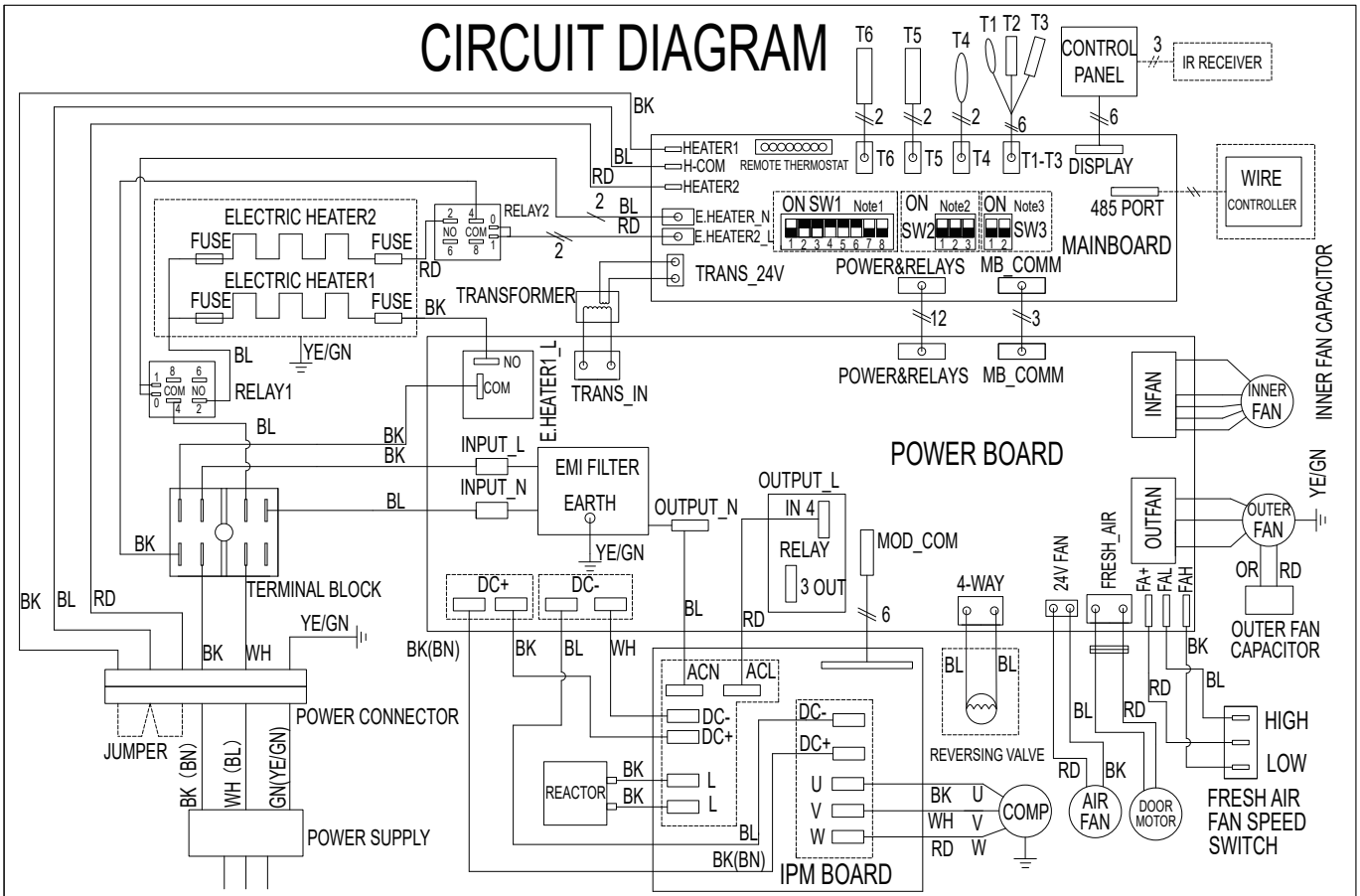

COLOR CODE	Note1 SW1 FUNCTION(ON-Enable, OFF-Disable)	Note2 SW2 MODEL TYPE SWITCH		Note3 SW3 FUNCTION GUIDANCE	WARNING:
BK-BLACK WH-WHITE BN-BROWN OR-ORANGE RD-RED YE/GN-YELLOW/GREEN BL-BLUE GN-GREEN	1-Reserved 2-Heat pump 3-Electric heater 4-Humidity control fresh air 5-Freeze protect 6-Auto restart 7-Reserved 8-Reserved	9K	12K	1-Fresh Air Enable/Disable 2-Fresh Air CONTINUOUSLY Running/CYCLES With Indoor Fan	SWITCHES SW2 ARE FOBBIDEN TO CHANGE, OTHERWISE UNIT WILL FAIL TO WORK AND MAY BE DAMAGED !
		ON SW2 1 2 3	ON SW2 1 2 3		
		1 ON,2 OFF,3 OFF	1 OFF,2 ON,3 OFF		

Digital Control Operation

Figure 29
Digital Control Panel

FRP029

Cooling Mode

Pressing the "Cool" button after turn the unit on will put the unit into cooling mode. Press "UP" or "DOWN" button to adjust the set point, the unit will start the compressor and run appropriate frequency to maintain a comfortable room temperature. The compressor will come on anytime that the room temperature is 2 ℉ above the set point. The fan will come on with compressor.

Heating Mode

After turn on the unit, press the "Heat" button will put the unit into heating mode.

Heat Pump Models (PVH)

When the "Heat" button is pressed initially the unit may call for electric strips to bring the room to the set point. When the room temperature falls 2°F below the set point, the unit will turn on the compressor or electric strip. The fan will run with compressor or electric strips. When the outdoor ambient temperature falls below 25°F or outdoor coil temperature drops to 5°F, the unit will operate the electric strip instead of heat pump. During heat pump mode, CPU detects the outdoor coil gets freeze, unit will go to defrost. During the defrost operation (10min at most), there will be no heating provide. After finishing defrost, electric heating will come on to warm the room quickly.

Emergency Heat Operation

In the event of a compressor failure in heat pump mode, the compressor may be locked out to provide heat through the electric strip heater. This feature ensures that even in the unlikely event of a compressor failure, the room temperature can be maintained until the compressor can be serviced. Dip switch 2 controls the emergency heat setting.

Constant Fan

Pressing the "Constant Fan" button will provide constant or cycle fan operation in cooling or heating modes. The fan speed selection is made by pressing either "High" or "Low" or "Auto" fan speed button.

Settings- Detailed Configurations

This section is about how to set the unit operating parameter, include display temperature unit, Fahrenheit or Celsius, control master, temperature limit, temperature calibration, display set point or room temperature.

Under OFF mode, hold [Cool] and [Low] two keys at the same time continuously for 5 seconds. This time displays ‘d0’, indicates that system has entered the senior operation status.

[Cool] key is used to switch parameter code and parameter value;

[UP] or [DOWN] keys are used to switch parameter code or set parameter value; [Power] key is used to save and exit settings.

Menu NO.	Function	Parameter value	Explanation
d0	Unit of temperature	F	Fahrenheit(default)
		C	Celsius
d1	Control master	P	By control panel(default)
		r	By 24V universal remote thermostat
		rE	By 12V smart wired controller
		rF	VRPXEMRT2 and VRPXEMWRT2 Energy management Controller
d2	Max temperature setting	d3 to 90℉	The Min value is d2 (default 90℉)
d3	Min temperature setting	60℉ to d2	The Max value is d3 (default 90℉)
d4	Indoor temperature calibration	-9℃ to 9℃	If unit of temperature is changed, calibration should be done again. If use the default value, it can be ignored. (default 0℃/0℉)
		-9℉ to 9℉	
d5	Temperature display selection	0 or 1	0-displays room temperature 1-displays set point(default)

One example:

Setting target:d0(C), d1(r), d2(88°F), d3(62°F), d4(-1°F), d5(1).

Step1: hold [Cool] and [Low] two keys at the same time continuously for 5 seconds. Display:'d0'

Step2: short press [Cool] key. Display: 'F'(setting d0 has finished)

Step3: short press [Cool] key. Display:'d0'

Step4: short press [UP] key. Display:'d1'

Step5: short press [Cool] key. Display: 'P'

Step6: short press [UP] or [DOWN] key. Display: 'r' (setting d1 has finished)

Step7: short press [Cool] key. Display:'d1'

Step8: short press [UP] key. Display:'d2'

Step9: short press [Cool] key. Display:'90'

Step10: short press [DOWN] key twice. Display:'88' (setting d2 has finished)

Step11: short press [Cool] key. Display:'d2'

Step12: short press [UP] key. Display:'d3'

Step13: short press [Cool] key. Display:'60'

Step14: short press [UP] key twice. Display:'62' (setting d3 has finished)

Step15: short press [Cool] key. Display:'d3'

Step16: short press [UP] key. Display:'d4'

Step17: short press [Cool] key. Display:'0' (setting d4 has finished)

Step18: short press [Power] key to exit.

Remote Control Thermostat Installation

Install Thermostat

1. Approximately 5 ft from the floor.
2. Close to or in a frequently used room, preferably on an inside wall.
3. On a section of wall without pipes or ductwork.

The Thermostat should NOT be mounted:

1. Close to a window, on an outside wall, or next to a door leading outside.
2. Where it can be exposed to direct sunlight or heat, such as the sun, a lamp, fireplace or any other temperature radiating object which may cause a false reading.
3. Close to or in the direct airflow of supply registers and/or return air grilles.
4. Any areas with poor air circulation, such as a corner, behind a door, or an alcove.

Remote Thermostat and Low Voltage Control Connections

Remote Thermostat

All Friedrich PZ model PTAC units are factory configured to be controlled by either the chassis mounted Smart Center or a 24V remote wall mounted thermostat. The thermostat may be auto or manual changeover as long as the control configuration matches that of the PTAC unit.

NOTE: All PV models require a single stage cool, dual stage heat thermostat with an B reversing valve control.The Friedrich RT7 thermostat can be configured for either model.

To control the unit with a wall mounted thermostat follow the steps below:

1. Unplug the unit before doing any work
2. Remove the low voltage terminal block from the unit.
3. Remove the fireproof cover from the unit.
4. Connect the corresponding terminals from the wall thermostat to the terminal block.
5. Reinstall the fireproof cover.
6. Plug the terminal block on the unit.
7. Restore power to the unit.
8. Under OFF mode, set menu NO.'d1' to "r", details refer to the previous section "Settings- Detailed Configurations" on page 31.
9. The unit is now controlled by the wall thermostat only.
10. If the accessory escutcheon kit (PDXRTA) is to be used, install it over the existing control panel.

NOTE: The unit control panel no longer controls the unit. To restore the control panel, set menu NO.'d1' back to "P", details refer to the previous section "Settings-Detailed Configurations" on page 2.

Thermostat Connections

R = 24V Power from Unit
Y = Call for Cooling
W = Call for Heating
B = Reversing Valve Energized in Heating Mode
GL = Call for Low Fan
GH = Call for High Fan
C = Common Ground

*If only one G terminal is present on thermostat connect to GL for low speed fan or to GH for high speed fan operation.

Figure 30

Control board with optional **PDXRTB** escutcheon kit installed

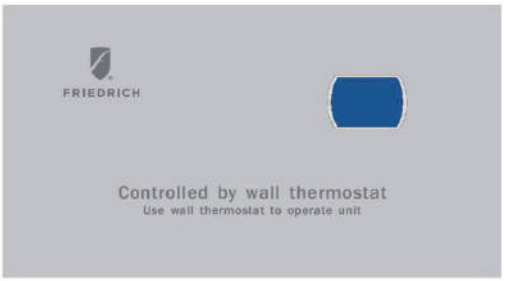

FRP030

Front Desk Control Terminal

(ONLY FOR UNIT CONTROL)

The Friedrich PV model PTAC has built-in provisions for connection to an external switch to control power to the unit. The switch can be a central desk control system.

For front desk control operation, connect one side of the normal open switch to the R terminal and the other to the FD terminal.

The control logic as below:

(a). Turn ON unit: short R and FD then release for one time within 5s.

(b). Turn OFF unit: short R and FD then release for twice within 5s.

(c). Force unit shut down for one time: short R and FD short over 5s.

NOTE: After forced shut down, you can turn on the unit again by control panel.

NOTE: The desk control system and switches must be field supplied.

Energy Management

Sometimes known as Front Desk Control, an input is provided so that the unit can be manually disabled from a remote location. If the unit detects 24Vac on this input, it will automatically turn itself off.If no voltage is detected on the input , the unit will run normally.

NOTE: It is the installer's responsibility to ensure that all control wiring connections are made in accordance with the installation instructions.Improper connection of the thermostat control wiring and/or tampering with the unit's internal wiring can void the equipment warranty.Other manufacturer's PTACs and even older Friedrich models may have different control wire connections.Questions concerning proper connections to the unit should be directed to Friedrich.

⚠ WARNING

Electrical Shock Hazard

Turn off electrical power before service or installation.
ALL electrical connections and wiring **MUST** be installed by a qualified electrician and conform to the National Code and all local codes which have jurisdiction.
Improper connection of the thermostat control wiring and/or tampering with the units internal wiring may result in property damage, personal injury or death.

Final Inspection & Start-up Checklist

- ❑ Inspect and ensure that all components and accessories have been installed properly and that they have not been damaged during the installation process.
- ❑ Check the condensate water drain(s) to ensure they are adequate for the removal of condensate water, and that they meet the approval of the end user.
- ❑ Ensure that all installations concerning clearances around the unit have been adhered to. Check to ensure that the unit air filter, indoor coil, and outdoor coil are free from any obstructions.
- ❑ Ensure that the entire installation is in compliance with all applicable national and local codes and ordinances that have jurisdiction.
- ❑ Secure components and accessories, such as the chassis, decorative front cover and control door.
- ❑ Start the unit and check for proper operation of all components in each mode of operation.Instruct the owner or operator of this units operation, and the manufacturer's recommended routine maintenance schedule.

NOTE: A log for recording the dates of maintenance and/or service is recommended.

- ❑ Present the owner or operator of the equipment with the Installation & Operation manual, all accessory installation instructions, and the name, address and telephone number of the Authorized Friedrich Warranty Service Company in the area for future reference if necessary.

Routine Maintenance

To ensure proper unit operation and life expectancy the following maintenance procedures should be performed on a regular basis.
The interior of unit should be maintained by HVAC techs only.

WARNING: Service of this product (aside from filter maintenance) shall only be performed by trained service personnel. Refer to the Service Manual for procedures on how to inspect and maintain the interior of the unit and its components. Scan the QR code which will help you locate the service manual online.

⚠ WARNING

Electrical Shock Hazard
Unplug Unit or turn off electrical power to unit prior to performing maintenance procedures

Failure to do so can result in electrical shock or death

Decorative Front

Use a damp (not wet) cloth when cleaning the control area to prevent water from entering the unit, and possibly damaging the electronic control.

The decorative front and the cabinet can be cleaned with warm water and a mild liquid detergent. Do NOT use solvents or hydrocarbon based cleaners such as acetone, naphtha, gasoline, benzene, etc.

The indoor coil can be vacuumed with a dusting attachment if it appears to be dirty. DO NOT BEND FINS. The outdoor coil can be gently sprayed with a garden hose.

Front Panel Air Filter

To ensure proper unit operation, the air filters should be cleaned at least monthly, and more frequently if conditions warrant. The unit must be turned off before the filters are cleaned.

To remove the air filters,filter grasp the top of the filters and lift out of the front cabinet. Reverse the procedure to reinstall the filters.

Clean the filters with a mild detergent in warm water, and allow them to dry thoroughly before reinstalling.

Coils & Chassis

The indoor coil and outdoor coils and base pan should be inspected periodically (annually or semiannually) and cleaned of all debris (lint, dirt, leaves, paper, etc.) as necessary. Under extreme conditions, more frequent cleaning may be required.

Wall Sleeve

Inspect the inside of the wall sleeve and drain system periodically (annually or semi-annually) and clean as required. Under extreme conditions, more frequent cleaning may be necessary.

Blower Wheel / Housing / Condenser Fan / Shroud

Inspect the indoor blower and its housing, evaporator blade, condenser fan blade and condenser shroud periodically (yearly or bi-yearly) and clean of all debris (lint, dirt, mold, fungus, etc.).

Fresh Air Intake Screen

The Fresh Air Intake Screen should be inspected every 60 days and cleaned of all debris (lint, dirt, leaves, paper, etc.) as necessary. Under extreme conditions, more frequent cleaning may be required.

Basic Troubleshooting

Malfunction	Possible Reasons	Solution
Start Failure	Power line bad, units don't have power supply.	Check the indicator LED on the LCID power head, it should be lit up, if not, push the RESET button, if still don't have voltage, but power grid has output, you need to change the power cord.
	Power cord protection trip.	Check the power cord if somewhere is broken, push the RESET button. If not solved, replace the power cord.
	Power cord isn't fixed well.	Check that whether power cord is fixed well.
	PCB fuse is broken.	Check if any load (in fan, out fan, reversing valve, power transformer) is short circuit. Eliminate the error and replace the fuse with the same type.
	Bad contact between main board and control panel.	Check the contact wires, make sure all contact well.
	Compressor delay start.	It's normal, compressor will start after 3 minutes.
	Power fail protection.	When power on, because of auto-restart, unit will delay starting in 120~240s.
	Unit in protection mode.	Please check the ERROR CODE.
	Main board or Control panel is bad.	Replace the main board or control panel.
Control panel do not work	When the unit is switch to 24V remote thermostat, the control panel will not be functioning.	If you need to use control panel to take control, you need to switch the control. See the Switch Over Between 24V Remote Thermostat and Control Panel in the senior settings section.
Indoor fan/outdoor fan not function or run slowly	Fan is locked by something or the power wires are not fixed well; fan capacitor is not fixed well; fan capacitor is out of service life.	Disconnect the power cord, check whether the fan can run smooth by hand or other tools, whether motor wire is fixed well. For the slow running speed, you could change a new capacitor.
Not well cooling/heating	Something may block the indoor/outdoor air outlet.	Make sure that there is no obstacle at the indoor/outdoor air outlet.
		Make sure that the grill is suitable for the unit, inappropriate grill will cause the compressor being protected; make sure that the grill has more than 70% turnover.
	Set unsuitable temperature.	Set higher/lower temperature by the control board. NOTE: temperature setting restriction will restrict the setting temperature. See the Setting Temperature Range chapter.
	Indoor air filter is dirty.	Should clean the filter every month at least.
	Room is hot/cold.	Let unit run a little longer that room temperature will be lower/higher.
	Heat leakage between indoor and outdoor.	Block the leakage place.
	Indoor coil not cold/heat.	Charge the refrigerant.
Unit has noise	Some moving parts of the unit get loose fixing or cause bad vibration. Something in the air way.	Make sure that all moving parts are assembled well, and nothing is in the air way.
Bad smell when heating	The dust on the E-heater is heating.	The bad smell will disappear a little later.

Malfunction	Possible Reasons	Solution
Outlet temperature is not always cooling/heating	Outlet temperature is not high enough when heating by heat pump.	When outdoor ambient temp is low, the heat pump will not be able to offer enough heat. Soon after that, the E-heater will come on to heat.
	Fan stops when cooling/heating.	It is normal when the CONSTANT FAN is OFF. Youcan enable the CONSTANT FAN.
Outdoor is dripping water	Not install the drain pipe kit.	Install the drain pipe kit.
Indoor is dripping water	Wall sleeve is not installed correctly.	Install the wall sleeve according to the installation manual.
Indoor coil freeze	Outdoor temperature is too low in cooling mode.	When outdoor temperature is drop to 55˚F (12.8 ˚C) or below, it will cause that indoor coil freeze. Open the fresh air door, and running at fan mode.
	Filter is dirty.	Clean the filter to recover the normal air flow.

Error code and solutions

ERROR CODE	Meaning	Solutions
E1	Communication failure between indoor unit and outdoor unit	Check the communication cables; make sure they are firmly connected. If the cables are broken, replace them.
E2	Indoor Temp Sensor Open/short	Check the plug is firmly connected. If the sensor is broken, replace it.
E3	Indoor Coil Sensor Open/short	Check the plug is firmly connected. If the sensor is broken, replace it.
E4	1. Indoor Air Outlet Sensor Open/Short 2. Outlet Air Over Heat In Electric Heating Mode	1. Check the plug is firmly connected. If the sensor is broken, replace it. 2. In E-Heating mode, check if any obstacles around the air path, remove them. Make sure the air flow is not blocked.
E5	IPM Over Heat	Remove obstacles in the air path that resists heat interchange.
E6	Outdoor Temp Sensor Open/Short	Check the plug is firmly connected. If the sensor is broken, replace it.
E7	Outdoor Coil Sensor Open/Short	Check the plug is firmly connected. If the sensor is broken, replace it.
EC	Compressor Fail Starting/DC-Inverter Fail	1. Check the DIP switch SW2 on the main board (3-position, in red color) is correctly matched with the unit capacity, refer to the wiring diagram. Make sure the compressor power cord is firmly and correctly connected.
EF	Power Cord Error For 9KBTU, 30A Is NOT Allowed	Change the power cord to 15A or 20A.
P1	Cooling/Heat Pump Over Load, Outdoor/Indoor Coil Over Heat	Make sure indoor and outdoor unit vents are not blocked. Clear the air filter and the condenser after a long time use.
P2	IPM Over Current Protection	1. Check the DIP switch SW2 on the main board (3-position, in red color) is correctly match with the unit capacity, refer to the wiring diagram. 2. Make sure the compressor power cord is firmly and correctly connected.
P4	Compressor Discharge Over Heat Protection	1. Make sure indoor and outdoor unit vents are not blocked. 2. Check the DIP switch SW2 on the main board (3-position, in red color) is correctly match with the unit capacity, refer to the wiring diagram.
P7	DC Over/Under Voltage Protection	Make sure the power supply is within the requirement (AC208/230V - 10%+10%)
P8	Internal fan secular malfunction	Check the internal fan plug is firmly connected. If the internal fan motor is broken, replace it.

For advanced troubleshooting and repair by qualified service technicians:

Scan the QR on page 34 code to be linked to our professional support page where you can locate the Service Manual.

Service & Assistance

Before calling for service, please check the "Basic Troubleshooting" section above.This may help you to find the answer to your problem, avoid unnecessary service calls, and save you the cost of a service call if the problem is not due to the product itself. If you have checked the "Basic Troubleshooting" section and still need help, here is a list of available

services:

You can find the name of you local Authorized Service Provider by visiting

our web site at www.friedrich.com.

If you require further assistance you can call the Customer Support Call

Center at 1-800-541-6645.

Before calling, please make sure that you have the complete model and serial number, and date of purchase of your equipment available. By providing us with this information we will be better able to assist you.

Our specialists are able to assist you with:

* Inspect and ensure that all components and accessories have been installed properly and that they have not been damaged during the installation.
* Specifications and Features of our equipment.
* Referrals to dealers, and distributors.
* Use and Care information.
* Recommended maintenance procedures.
* Installation information.
* Referrals to Authorized Service Providers and Parts depots.

Accessories

DIGITAL REMOTE THERMOSTAT

RT7P

24v, Wired (7 Std), single stage, wall-mounted, 7-day programmable thermostat, three fan speeds (auto/low/high), and an easy-to-read large backlight display.

RT7P

RT7

24v, Wired (7 Std), non-programmable, wall-mounted thermostat (unit powered capable), three fan speeds (auto/low/ high), and an easy-to-read backlight display.

RT7

WRT2

Wireless wall-mounted thermostat (battery powered). Wireless transmitter (24v), 7-day programmable, three fan speeds (auto/low/high), and an easy to read large backlight display.

WRT2

*ENERGY MANAGEMENT THERMOSTATS

VRPXEMRT(A/B)4 VRPXEMWRT(A/B)4

VRPXEMRTA4 (White) / VRPXEMRTB4 (Black) wired EcoNet® wall controller, and VRPXEMWRTA4 (White) / VRPXEMWRTB4 (Black) wireless EcoNet® controller with occupancy sensor designed for FreshAire® PTAC control.

Built-in Relative Humidity control to maximize FreshAire® PTAC capabilities. Used with EMOCT for HVAC energy management.

VRPXWCTA4

Wired thermostat without occupancy sensor (white only) 12V. Full inverter control. Designed to maximize features and benefits.

EMWRTA4 (White) / EMWRTB4 (Black)

Wireless thermostat with occupancy sensor. Built in Relative Humidity control. Used with EMOCT for HVAC energy management.

EMRTA4 (WHITE) / EMRTB4 (BLACK)

Wired thermostat with occupancy sensor.

*EMRAF4

Remote access fee.

EMOCT4

Online connection kit for Energy Management.

EMWRT(A/B)4, EMRT (A/B) 4, VRPXEMRT (A/B) 4, VRPXEMWRT (A/B) 4 EMOCT

* There is a one time remote access fee for energy management connection per stat/controller

NOTE: **The FreshAire® PTAC when paired with 12v wall controller **VRPXEMRT4** or **VRPXEMWRT4** will operate as a fully variable speed unit.

When used with other compatible 24v thermostats, the unit will operate at multiple speeds in either cooling or heating mode.

Accessories

WALL SLEEVE

PDXWSEZ

Easy snap-together design. Galvanized, zinc-coated steel with a polyester finish. The wall sleeve is insulated for thermal efficiency and noise reduction.

PDXWSEZ

PDXWSA

Galvanized steel is prepared in a multi-step process for stronger paint adhesion, then powder coated with a polyester finish and cured in an oven for exceptional durability. The wall sleeve is already assembled and insulated for thermal efficiency and noise reduction.

SLEEVE DIMENSIONS: 16" H x 42" W x 13 3/4" D

CUT OUT DIMENSIONS: 16 1/4" H x 42 1/4" W

FRONT COVER DIMENSIONS: 16" H x 42" W x 7 3/4" D

PDXWSA

DEEP WALL SLEEVES

PDXWSEXT18

For walls up to 17 1/2" deep.

PDXWSEXT20

For walls up to 19 1/2" deep.

PDXWSEXT24

For walls up to 23 1/2" deep

PDXWSEXT (Custom depth wall sleeve)

One-piece, extended wall sleeve with built-in baffle for walls from 13 1/4" to 25 1/2" deep are available by special order.

Deep wall sleeve extension PDXWSEXT18 shown with weather panel in place.

REMOTE THERMOSTAT ESCUTCHEON KIT

PDXRTB (10 pack)

Kit contains escutcheons that can be placed over the factory control buttons (recommended when a remote wall mounted thermostat is used as controls become inoperable). The escutcheon directs the user to the wall thermostat for operation and retains the LED window to display error codes and diagnostic information. 10 pack.

PDXRTB

Accessories

CONDUIT KIT /JUNCTION BOX PXCJA

Hard wire conduit kit with junction box for 208/230V and 265V units (subbase not required). Kit includes a means of quick disconnect for easy removal of the chassis.

PXCJA

STANDARD GRILLE PXGA

Standard, stamped, anodized aluminum to resist chalking and oxidation.

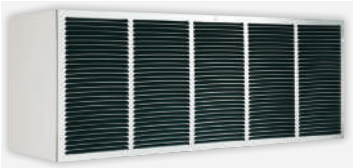

PXGA

ARCHITECTURAL GRILLES

Architectural grilles consist of heavy gauge 6063-T5 aluminum alloy.

PXAA Clear extruded aluminum.

PXBG Beige acrylic enamel.

PXSC Available in custom colors.

PXAA

HURRICANE LOUVERS

Miami Dade rated PTAC louver to help secure projects along the cost where TAS 201 high velocity hurricane zones

PXAAHD Miami Dade Architectural Anodized Aluminum Louver

PXSCHD Miami Dade available in custom colors

DECORATIVE SUBBASE (black) PXSBA

Provides unit support for walls less than six inches thick. Includes leveling legs, side filler panels and mounting brackets for electrical accessories. Accepts circuit breaker, power disconnect switch and conduit kit.

PXSB

PXSBA

ELECTRICAL SUBBASE

Provides unit support for walls less than six inches thick. Includes leveling legs, side filler panels, mounting brackets, a plug-in receptacle and field-wiring access. The subbase also includes electrical knockouts for power disconnect switch or circuit breaker.

PXSB23020	Electrical Subbase - 230V 15 & 20A
PXSB23030	Electrical Subbase - 230V 30A
PXSB26515	Electrical Subbase - 265V 15A
PXSB26520	Electrical Subbase - 265V 20A
PXSB26530	Electrical Subbase - 265V 30A

SUBBASE DISCONNECT SWITCH PXDS

PXDS

LATERAL DUCT ADAPTER PDXDAA

Attaches to the Friedrich PTAC/PTHP unit to direct up to 35% of the total airflow to a second room. The unit-mounted duct plenum features a front-mounted aluminum grille that has two positions to provide the most optimal air direction. The air may be directed to either the left or the right of the unit through the supplied 3 1/2" H x 7" W x 47" L plenum. Plenum may be cut to length by the installer. Kit includes duct plenum, front grille, 47" duct extension, duct discharge grille, duct end cap and all necessary mounting hardware.

PDXDAA and PDXDEA ship together

LATERAL DUCT EXTENSION PDXDEA

Additional 3 1/2" H x 7" W x 47" L plenum used with the LATERAL DUCT ADAPTER.

A maximum of three duct extensions may be used together.

Note: Ducted airflow is reduced as duct length is increased.

FreshAire® Purifier APWM1 FreshAire® Purifier by iWaves features needlepoint bi-polar ionization to address any mold, bacteria, virus, allergens, and VOC's that may be in your air stream to ensure delivery of healthy, clean, purified air.

APWM1

CONDENSATE DRAIN KIT PXDR10

Attaches to the bottom of the wall sleeve for internal draining of condensate, or to the rear wall sleeve flange for external draining. Recommended for all units to remove excess condensate. 10 pack.

PXDR10

PXFTB Air Filter

Front-end air filter. 10. pack. Each PTAC requires 2 filters.

PXFTB

PXFAFT10 Air FIlter

Replacement FreshAire / Make up Air MERV 8 filters. 10 pack. Each PTAC requires 1 filter.

PXFAFT10

POWER CORDS

Universal power cords enable properties to select the appropriate heater size.

Reference the electrical tables for power cord options.

Warranty Information

Current warranty information can be obtained by referring to

https://www.friedrich.com/professional/support/product-resources

We are focused on innovating with intent, engineering solutions with lifetime sustainability in mind. Our products are designed to give businesses greater control over their energy consumption, lowering their environmental impact.

To learn more about our commitment to sustainability, visit Friedrich.com/Sustainability

Friedrich is a part of the Rheem® family of brands. In keeping with its policy of continuous progress & program improvement, Rheem reserves the right to make changes without notice.

The AHRI Certified® mark indicates our participation in the AHRI Certification program. For verification of individual certified products, go to www.ahridirectory.org.

© 2026 Rheem Manufacturing Company. Trademarks are property of their respective owners. Due to continuing research in new energy-saving technology, specifications are subject to change without notice. Warranty limited to installations in the United States, Puerto Rico, Mexico and Canada only.

See warranty documentation for full details.

2 YR. PARTS & LABOR WARRANTY

5 YR. LIMITED WARRANTY

FRIEDRICH

Friedrich Air Conditioning Co. | Friedrich.com

Intertek

AHRI CERTIFIED™ www.ahridirectory.org Packaged Terminal HP AHRI Standard 310/380

AHRI CERTIFIED™ www.ahridirectory.org Packaged Terminal AC AHRI Standard 310/380