Installation Manual: JHE Standard ECM Single-Piece Multi-Position Air Handlers

CAUTION

Risk of fire

This unit uses a mildly flammable (A2L) refrigerant. See A2L refrigerant safety considerations to ensure safe installation, operation, and servicing of this unit.

York International Corp. 5005 York Drive
Norman, OK 73069

6404622-UIM-C-0824

Supersedes: 6404622-UIM-B-0524

Rev C

2024-08-02

Contents

About this unit.... 5
Certification.... 5
DS Solutions App.... 5
Safety.... 6
- Understanding safety symbols and instructions.... 6
- Safety requirements.... 7
- A2L refrigerant safety considerations.... 10
  - General.... 11
  - Room size requirements.... 11
  - Mechanical ventilation.... 13
  - Refrigerant equipment checks.... 14
  - Electrical devices checks.... 14
  - Detection of refrigerant.... 15
  - Decommissioning.... 16
  - Wiring installation.... 17
  - Understanding RDS status codes and fault codes.... 19

Installation overview.... 20
Preparing for installation.... 21
- Inspecting the unit.... 21
- Selecting a location for installation.... 21
- Providing the required clearances.... 22
- Performing a pressure check.... 23
- Understanding installation and operation limitations.... 23
- Becoming familiar with the unit components.... 24
- Becoming familiar with the unit dimensions.... 25
- Installing an electric heat kit.... 26

Installing the unit.... 27
- Designing and installing the ductwork.... 27
- Understanding unit configuration.... 28
- Converting the unit for downflow or horizontal right use.... 29
  - Installing a horizontal baffle plate.... 29
- Suspending the unit in horizontal applications.... 30
- Using the duct flanges.... 31
- Connecting the unit to the ductwork.... 32
- Installing the air filters.... 33
- Connecting the condensate drain lines.... 33

Installing the refrigerant piping.... 35
- Preparing to connect the refrigerant lines.... 35
  - Brazing the refrigerant lines.... 36
  - Using braze-free refrigerant line connections.... 37
- Checking for leaks, evacuating, and charging the unit.... 38

Completing the refrigerant piping.... 38
Connecting the wiring.... 39
Connecting the power line.... 39
Connecting the low-voltage control wiring.... 40
JHE thermostat wiring diagrams.... 41
Understanding the standard ECM nine-tap blower motor speed selections.... 43
Setting the blower motor speed.... 45
Adjusting the air system.... 46
Verifying TXV installation.... 47
Unit data.... 48
Combustible floor base accessory.... 48
Physical and electrical data cooling only.... 49
Electrical data cooling only.... 49
Electrical heat with heat pump: minimum fan speed.... 49
Application factors rated CFM versus actual CFM.... 49
kW and MBH conversions for total power input requirement.... 50
Electric heat performance data for 1 phase and 3 phase.... 50
Electrical data for single source power supply: 1 phase.... 50
Electrical data for multi-source power supply: 1 phase.... 52
Electrical data for single source power supply: 3 phase.... 52
Electrical data for multi-source power supply: 3 phase.... 53
Airflow data.... 54
Maintenance.... 58
Coil cleaning.... 58
Lubrication.... 58
Condensate drains.... 58
Third-party trademarks.... 59
Wiring diagram.... 60
Start-up sheet.... 61

About this unit

This single-piece air handler series provides the flexibility for installation in any position.

The JHE unit can be used for upflow, downflow, horizontal right, or horizontal left applications.

These units can be located in a closet, utility room, attic, crawl space, or basement. These versatile models may be used for cooling or heat pump operation with or without electric heat.

Top or side power and control wiring, color-coded leads for control wiring, and electric heaters all combine to make the installation easy and minimize installation cost.

Electric heat kits are available as field-installed accessories. Single-phase kits are available from 2 kW to 25 kW and 208/230 V three-phase kits are available from 10 kW to 25 kW.

Certification

AHRI CERTIFIED™
www.ahridirectory.org
Residential Furnaces
DOE 10 CFR Part 430

US

Assembled at a facility with an ISO 9001:2015-certified Quality Management System

DS Solutions App

Johnson Controls believes in empowering our customers with unit-specific information at all times. Download the Ducted Systems Solutions Mobile App (DS Solutions App), which is available through the App Store for iOS and Google Play for Android. Users can use the DS Solutions App to scan the QR code located on the rating plate that is unique to each unit and provides information specific to the product. Take advantage of the features available for all units: Nomenclature, Literature (Technical Guide, Installation Manual and Wiring Diagrams), Parts list, Product Registration, Claims Tracking, and more.

Ducted Systems Solutions

iOS

Android

Safety

It is important to understand the safety symbols used in this manual. Read safety information carefully and follow all safety requirements to ensure correct installation.

Understanding safety symbols and instructions

Understand and pay particular attention to the signal words **DANGER**, **WARNING**, **CAUTION**, as well as the **NOTICE**, **Important**, and **Note** alerts.

DANGER indicates an **imminently** hazardous situation, which, if not avoided, **will result in death or serious injury**.

WARNING indicates a **potentially** hazardous situation, which, if not avoided, **could result in death or serious injury**.

CAUTION indicates a **potentially** hazardous situation, which, if not avoided **may result in minor or moderate injury**. It is also used to alert against unsafe practices and hazards involving only property damage.

NOTICE indicates information considered important, but not hazard-related, such as messages relating to property damage.

Important indicates information that is essential to complete a task or may result in damage to the device if not followed.

Note indicates something of special interest or importance. Notes can contain any type of information except safety information.

Safety requirements

WARNING

Fire or electrical hazard

Failure to follow the safety warnings exactly could result in serious injury, death or property damage. A fire or electrical hazard may result causing property damage, personal injury or loss of life.

WARNING

The air handler area must not be used as a broom closet or for any other storage purposes, as a fire hazard may be created. Never store items such as the following on, near or in contact with the furnace.

1. Spray or aerosol cans, rags, brooms, dust mops, vacuum cleaners or other cleaning tools.

2. Soap powders, bleaches, waxes or other Cleaning compounds; plastic items or containers; gasoline, kerosene, cigarette lighter fluid, dry cleaning fluids or other volatile fluid.

3. Paint thinners and other painting compounds.

4. Paper bags, boxes or other paper products.

Never operate the air handler with the blower door removed. To do so could result in serious personal injury and/or equipment damage

WARNING

This appliance is not intended for use by persons (including children) with reduced physical, sensory or mental capabilities, or lack of experience and knowledge, unless they have been given supervision or instruction concerning use of the appliance by a person responsible for their safety.

Children should be supervised to ensure that they do not play with the appliance.

WARNING

Improper installation, adjustment, alteration, or maintenance may create a condition where the operation of the product could cause personal injury or property damage. Refer to this manual for assistance, or for additional information, consult a qualified contractor, installer, or service agency.

CAUTION

If using this unit in a system with R454B, a mildly flammable (A2L) refrigerant, refer to the A2L refrigerant safety considerations to ensure safe installation, operation, and servicing of this unit.

For minimum airflow (CFM) requirements, refer to Table 2 in A2L refrigerant safety considerations.

⚠ CAUTION

This product must be installed in strict compliance with the installation instructions and any applicable local, state, and national codes including, but not limited to building, electrical, and mechanical codes.

NOTICE

To ensure a correct match for this indoor product, refer to the current *Tabular Data Sheet* for the outdoor equipment selected for the system application. If the indoor product model is not listed in the *Tabular Data Sheet* included with the outdoor unit, to access the current version of the *Tabular Data Sheet*, go to the *Residential Equipment & Supplies* section of the Offering Catalog at http://www.simplygettingthejobdone.com or scan the QR code provided on the outdoor unit nameplate.

Adhere to the following:

- Install this air handler in a location and position as specified in the *Selecting a location for installation* section.
- Do not use the air handler for temporary heating of buildings or structures under construction.
- Always install the air handler to operate within the air handler's intended maximum outlet air temperature.
- Clearance from combustible material is provided in the *Selecting a location for installation* section.

⚠ CAUTION

Do not lift the air handler by the cabinet braces. The cabinet braces could become disengaged from the cabinet causing the air handler to fall, potentially causing injury or damaging property. See Becoming familiar with the unit components for the location of the cabinet braces. Lift the air handler by tightly gripping the casing.

- Verify the nameplate and power supply to ensure that the electrical characteristics match.
- When attaching ductwork with screws, carefully fasten the screws and keep them within 5/8 in. of the sides and back of the air handler.
- Install the air handler so that the electrical components are protected from water.
- Installing and servicing heating and cooling equipment can be hazardous due to the electrical components. Only trained and licensed personnel must install, repair, or service heating and cooling equipment. Unlicensed service personnel can perform basic maintenance functions such as cleaning and replacing the air filters. When working on heating and cooling equipment, the safety requirements in the manuals and on the labels attached to each unit and other safety information must be observed as applicable.

⚠ CAUTION

These air handlers must be transported and handled in an upright, upflow position. Failure to do so may result in unit damage and personal injury. Configuration conversions must be done at the site of installation.

- These instructions cover minimum requirements and conform to existing national standards and safety codes. In some instances, these instructions exceed certain local codes and ordinances, especially those which have not kept up with changing residential and non-HUD modular home construction practices. These instructions are required as a minimum for a safe installation.
- These models are not CSA listed or approved for installation into a HUD-approved modular home or a manufactured (mobile) home.

A2L refrigerant safety considerations

CAUTION

For R454B applications, this unit uses a mildly flammable (A2L) refrigerant. You must read all of this section before installing this unit to ensure safe installation, operation, and servicing of this unit.

WARNING

Do not use means to accelerate the defrosting process or to clean, other than those recommended by the manufacturer.

The appliance shall be stored in a room without continuously operating ignition sources, for example, open flames, an operating gas appliance, or an operating electric heater.

Do not pierce or burn.

Be aware that refrigerants may not contain an odor.

WARNING

Any required ventilation openings must be kept clear of obstruction.

WARNING

Any ducts connected to the unit shall not contain a potential ignition source.

General

Table 1: Safety considerations

Item number	Safety consideration
1	Any appliance containing more than 3.9 lb in a refrigerating circuit must be constructed such that any refrigerant leak cannot stagnate in a way that would create a fire or explosion hazard.
2	Before beginning work on systems containing flammable refrigerants, safety checks are necessary to ensure that the risk of ignition is minimized. For repair to the refrigerating system, item 3 to item 7 below must be adhered to before conducting work on the system.
3	Work must be undertaken under a controlled procedure so as to minimize the risk of a flammable gas or vapor being present while the work is being performed.
4	Instruct all maintenance staff and others working in the local area on the nature of work being carried out. Avoid work in confined spaces.
5	The area must be checked with an appropriate refrigerant detector before and during work to ensure the technician is aware of potentially toxic or flammable atmospheres. Ensure that the leak detection equipment being used is suitable for use with all applicable refrigerants: non-sparking, adequately sealed, or intrinsically safe.
6	If conducting any hot work on the refrigerating equipment or any associated parts, you must have appropriate fire-extinguishing equipment on hand. Have a dry powder or CO_2 fire extinguisher adjacent to the charging area.
7	If conducting work in relation to the refrigerating system that involves exposing any pipework, do not use any sources of ignition in such a manner that may lead to the risk of fire or explosion. All possible ignition sources, including cigarette smoking, must be kept sufficiently far away from the site of installation, repair, removal, and disposal, during which refrigerant might possibly be released to the surrounding space. Before conducting any work, survey the area around the equipment to ensure that there are no flammable hazards or ignition risks. Display “No Smoking” signs.
8	Ensure the area is in the open or that it is adequately ventilated before opening the system or while conducting any hot work. The ventilation must safely disperse any released refrigerant and preferably expel it externally into the atmosphere.
9	Ensure that the sensor is not obstructed in any way.

Room size requirements

WARNING

If the unit must be installed in a residence with a minimum room area less than what is determined to be the minimum from Table 2, then that room must also not have any continuously operating open flames or other potential ignition sources. A flame-producing device may be present if that device is provided with an effective flame arrest.

Table 2: Minimum room area

System charge (lb-oz)	Minimum room area (ft^2)	Minimum total conditioned area (ft^2)	Minimum system airflow (CFM)
4-0	43	58	233
4-4	46	61	248
4-8	48	65	262
4-12	51	69	277
5-0	54	72	291
5-4	56	76	306
5-8	59	80	321
5-12	62	83	335
6-0	64	87	350
6-4	67	90	364
6-8	70	94	379
6-12	73	98	393
7-0	75	101	408
7-4	78	105	422
7-8	81	108	437
7-12	83	112	452
8-0	86	116	466
8-4	89	119	481
8-8	91	123	495
8-12	94	127	510
9-0	97	130	524
9-4	99	134	539
9-8	102	137	554
9-12	105	141	568
10-0	107	145	583
10-4	110	148	597
10-8	113	152	612
10-12	115	155	626
11-0	118	159	641
11-4	121	163	656
11-8	124	166	670
11-12	126	170	685
12-0	129	173	699
12-4	132	177	714
12-8	134	181	728
12-12	137	184	743
13-0	140	188	758
13-4	142	192	772

Table 2: Minimum room area

System charge (lb-oz)	Minimum room area (ft^2)	Minimum total conditioned area (ft^2)	Minimum system airflow (CFM)
13-8	145	195	787
13-12	148	199	801
14-0	150	202	816
14-4	153	206	830
14-8	156	210	845
14-12	158	213	860
15-0	161	217	874
15-4	164	220	889
15-8	167	224	903
15-12	169	228	918
16-0	172	231	932
16-4	175	235	947
16-8	177	239	962
16-12	180	242	976
17-0	183	246	991
17-4	185	249	1005
17-8	188	253	1020

Note:

- Minimum room area refers to the smallest air conditioned room on the lowest floor of the residence.
- Minimum total conditioned room area refers to the combined area of all air conditioned rooms in the residence.

If the system charge is not listed in the above table, use the formulas below to calculate the respective values:

- Minimum room area = system charge x 10.742
- Minimum total conditioned area = system charge x 14.458
- Minimum system airflow = system charge x 58.275

Mechanical ventilation

Table 3: Mechanical ventilation

Item number	Safety consideration
1	If installing the unit in a residence below the determined total conditioned area from Room size requirements, then extra mechanical ventilation is required.

Refrigerant equipment checks

Table 4: Refrigerant equipment checks

Item number	Safety consideration
1	Where electrical components are being changed, they must be fit for the purpose and to the correct specification. At all times, the manufacturer's maintenance and service guidelines must be followed. If in doubt, consult the manufacturer's technical department for assistance.
2	Apply the following checks to installations using flammable refrigerants: • Ensure the actual refrigerant charge is in accordance with the room size within which the refrigerant-containing parts are installed. • Ensure the ventilation machinery and outlets are operating adequately and are not obstructed. • Ensure marking on the equipment continues to be visible and legible. Correct any markings and signs that are illegible. • Install refrigerating pipe or components in a position where they are unlikely to be exposed to any substance that may corrode refrigerant-containing components, unless the components are constructed of materials that are inherently resistant to being corroded or are suitably protected against being corroded.

Electrical devices checks

Table 5: Electrical devices checks

Item number	Safety consideration
1	Repair and maintenance to electrical components must include initial safety checks and component inspection procedures.
2	If a fault exists that could compromise safety, then do not connect any electrical supply to the circuit until the fault is satisfactorily dealt with. If the fault cannot be corrected immediately but it is necessary to continue operation, use an adequate temporary solution. This must be reported to the owner of the equipment so all parties are advised.
3	Initial safety checks must include: • Ensure capacitors are discharged: take care to avoid the possibility of sparking. • Ensure no live electrical components and wiring are exposed while charging, recovering, or purging the system. • Ensure there is continuity of earth bonding.

Detection of refrigerant

Table 6: Detection of refrigerant

Item number	Safety consideration
1	Under no circumstances shall potential sources of ignition be used in the searching for or detection of refrigerant leaks. Do not use a halide torch or any other detector using a naked flame.
2	The following leak detection methods are deemed acceptable for all refrigerant systems. • Electronic leak detectors may be used to detect refrigerant leaks but, in the case of flammable refrigerants, the sensitivity may not be adequate or may need re-calibration. Calibrate the detection equipment in a refrigerant-free area. Ensure that the detector is not a potential source of ignition and is suitable for the refrigerant used. Set leak detection equipment at a percentage of the LFL of the refrigerant and calibrate to the refrigerant employed. Ensure the appropriate percentage of gas with a maximum of 25% is confirmed. • Leak detection fluids are also suitable for use with most refrigerants but avoid the use of detergents containing chlorine as the chlorine may react with the refrigerant and corrode the copper pipework. Examples of leak detection fluids are bubble method and fluorescent method agents.
3	If a leakage of refrigerant is found that requires brazing, recover all of the refrigerant from the system or isolate the leakage by means of shut-off valves in a part of the system remote from the leak. Remove refrigerant according to the *Removal and evacuations* section of the outdoor unit's *Installation Manual*.

Decommissioning

Before you begin:
Before attempting the procedure, complete the following:

- Ensure that the technician is completely familiar with the equipment and all its detail.
- Ensure to safely recover all refrigerants.
- Take an oil and refrigerant sample, in case analysis is required before reusing the recovered refrigerant.
- Ensure that electrical power is available.
- Ensure that mechanical handling equipment is available, if required, for handling refrigerant cylinders.
- Ensure that all personal protective equipment is available and being used correctly.
- Ensure that the recovery process is supervised at all times by a competent person.
- Ensure that recovery equipment and cylinders conform to the appropriate standards.

Follow the steps below to ensure the unit is correctly and safely decommissioned:

1. Isolate the system electrically.
2. Connect a recovery machine to remove refrigerant from the system.
3. Ensure that the cylinder is situated on the scales before recovery takes place.
4. Start the recovery machine and operate in accordance with instructions provided with the machine.

   ⓘ **Note:**
   - Do not overfill cylinders to more than 80% volume liquid charge.
   - Do not exceed the maximum working pressure of the cylinder, even temporarily.

5. When the cylinders have been filled correctly and the process completed, ensure that the cylinders and the equipment are removed from the site promptly and that all isolation valves on the equipment are closed off.

   ⓘ **Note:** Do not charge recovered refrigerant into another refrigerating system unless it has been cleaned and checked.

What to do next:
Label the equipment stating that it has been decommissioned and emptied of refrigerant. Date and sign the label. For appliances containing flammable refrigerants, ensure that there are labels on the equipment stating that the equipment contains a flammable refrigerant.

Wiring installation

NOTICE

Cap unused wiring connections.

NOTICE

The mitigation control board has a bank of DIP switches. For use with a JHE air handler indoor model, both DIP switches must be in the 0 or off position.

Figure 1: Mitigation control wiring

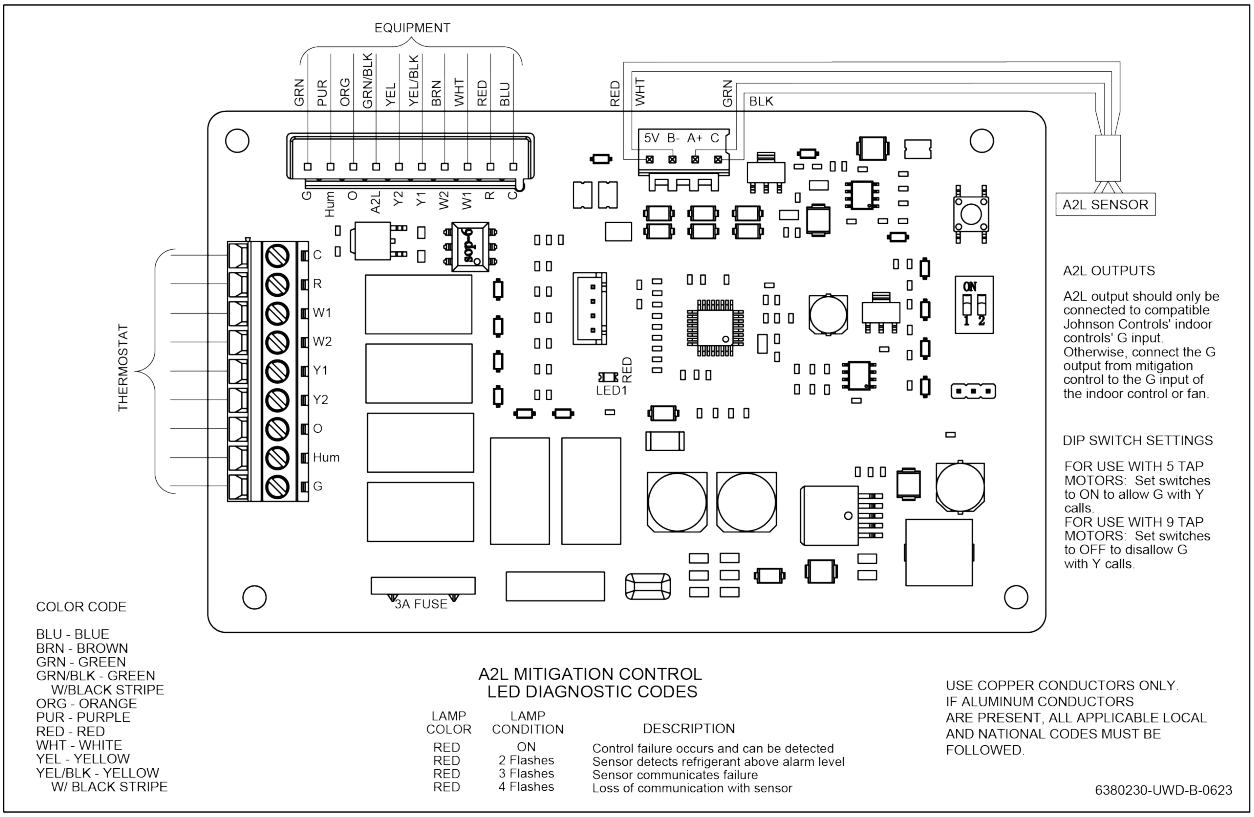

Figure 2 shows the DIP switches on the mitigation control board in the on position.

Figure 2: DIP switches in on position

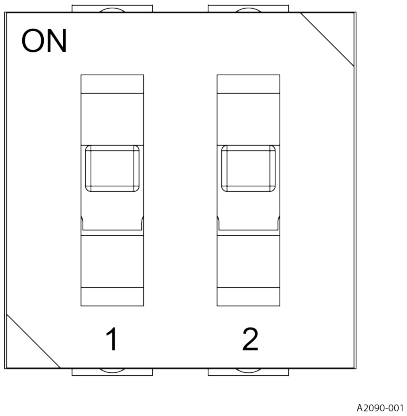

Field-testing the sensor

1. After wiring and configuring the system, provide a Y call for cooling.
2. Simulate an A2L leak by disconnecting the A2L sensor wire from the A2L control board or simply move the TEST jumper from NC to Test. Ensure to return the TEST jumper to NC when testing is complete.

Figure 3: Test jumper

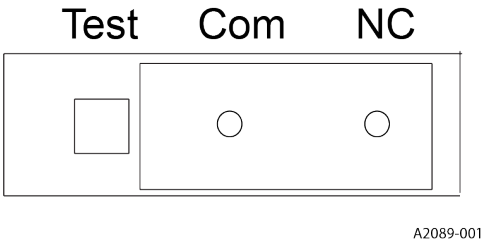

3. After 15 s, verify that the call for the compressor is removed.
4. Verify that the Y output pin has no voltage and that the G output pin has 24 VAC.
5. Reinstall the sensor, then wait 5 min and verify that the system returns to cooling mode.
6. When the system is in standby mode, repeat the test for a W call for heating.
7. When testing is complete, re-install the front cover on the control box.

Understanding RDS status codes and fault codes

LED1 on the RDS mitigation control board indicates the following:

- Status codes that indicate the state of the RDS control
- Fault codes

Table 7 gives an overview of the RDS status codes and fault codes and how they display.

Table 7: RDS status codes and fault codes

LED1 display	Description	Condition
Off	No power to RDS control	No power to RDS control
Red 2 s on/red 2 s off	RDS control powered and microprocessor active	No active faults, normal operation
Red 0.5 s on/red 0.5 s off	RDS control powered and test mode active	Test mode activated by test jumper pins
Red (solid)	RDS control failure	RDS control failure has occurred and can be detected
Emits 2 red flashes	Leak detected above 15% low flammable limit (LFL)	Sensor detects refrigerant above alarm level
Emits 3 red flashes	Refrigerant sensor failure	Sensor communicates failure
Emits 4 red flashes	Refrigerant sensor communications lost	Loss of communications with sensor

Displaying and clearing stored fault codes

About this task:
The RDS control stores fault codes for 30 days. You can use the push button on the RDS mitigation control board to retrieve and clear stored fault codes if no active faults are present.

Important:

- If you press and hold the push button for less than 2 s, the RDS control does not respond.
- If an active fault is present when you press and hold the push button, the RDS control does not respond.

To display and clear stored fault codes, do the following:

1. On the RDS mitigation control board, press and hold the push button for 2 s to 5 s. If stored fault codes are present, the fault codes display.
2. Press and hold the push button for more than 5 s to clear the stored fault codes if required.

Installation overview

Complete all of the stages outlined in Figure 4. You may not need to perform tasks indicated with a dashed outline, depending on the specific installation. See Unit data for unit data as needed throughout the installation. You can use the TXV checklist to verify TXV installation if needed. See Verifying TXV installation.

Figure 4: Installation overview

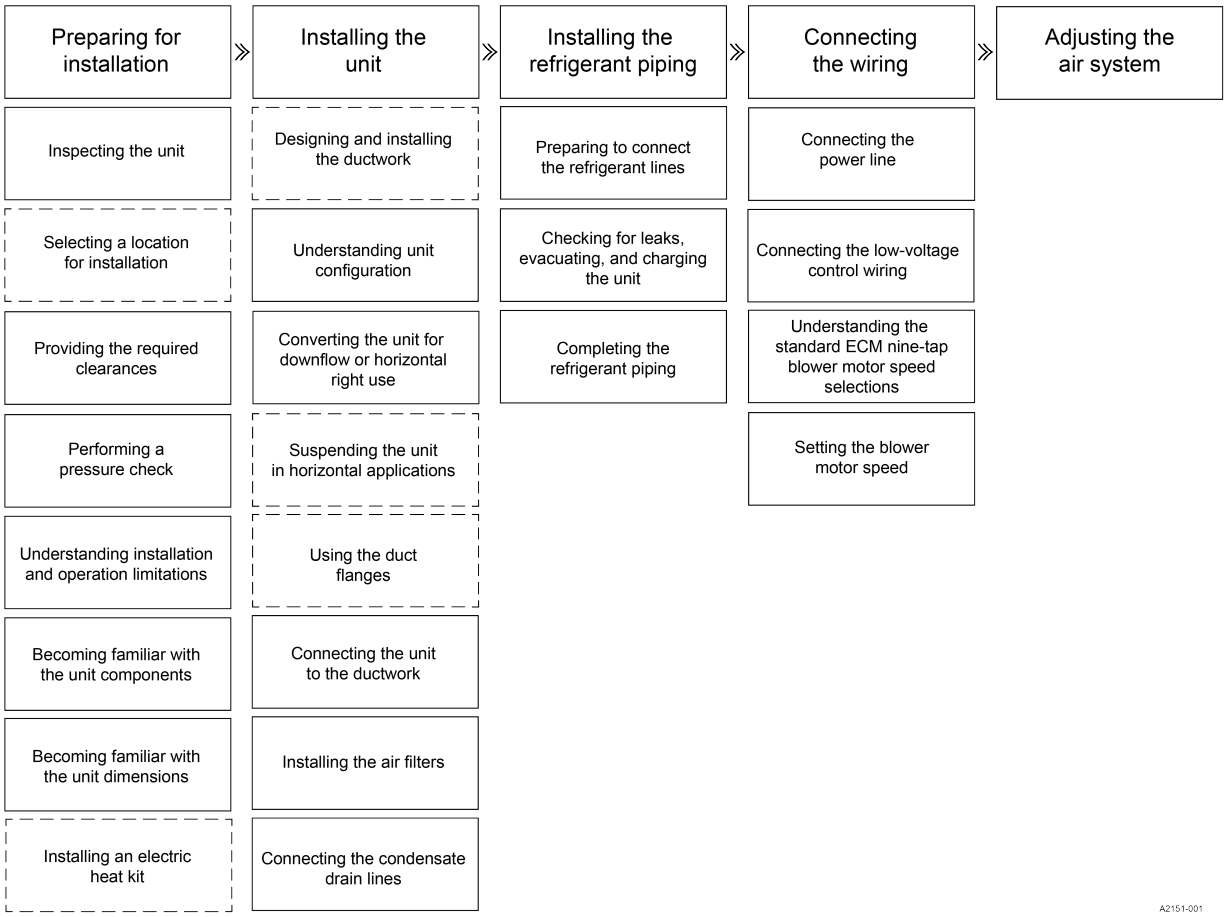

Preparing for installation

Complete the necessary preparation before you begin the installation:

1. Inspect the unit for possible damage in transit.
2. Select a suitable location if it is not already predetermined. Take into consideration factors such as structural support, space for service access, and operating sound levels.
3. Provide the required clearances around the unit.
4. Perform a pressure check.
5. Understand any installation and operational limitations such as unit size.
6. Familiarize yourself with the unit components, dimensions, and make sure you have all necessary equipment.
7. Install an electric heat kit if required.

   Important: If you do not install an electric heat kit, you must mark the unit nameplate appropriately to indicate that no electric heat kit is installed.

Inspecting the unit

About this task:
There are no internal shipping or spacer brackets to remove.

To inspect the unit, do the following:

1. Inspect the air handler, including the coil, immediately after receiving it for possible damage during transit. Ensure that you also check the drain pan for cracks or breakage.
2. If damage is evident, do the following:
   a. Note the extent of the damage on the carrier's freight bill.
   b. Make a separate written request for the carrier's agent to inspect the unit.
   c. Contact the local distributor for more information.
3. Check to ensure that the air handler is still under pressure. See Performing a pressure check.
4. Check the unit for screws or bolts loosened in transit.
5. Verify that the coil and all accessories, such as a heat kit, are available.

   Note: Complete the installation of these accessories or field conversion of the unit before setting the unit in place or connecting any wiring, ductwork, or piping. 48C5CG and 60C5CH models are shipped with a horizontal baffle plate. For more information, see Installing a horizontal baffle plate. Remove and retain this plate for horizontal right application. Discard for all other applications.

Selecting a location for installation

Location is usually predetermined. Check with the owner's or dealer's installation plans. If location has not been decided, consider the following in choosing a suitable location:

- Select a location with adequate structural support, space for service access, and clearance for air return and supply duct connections.
- Do not use hanging brackets to wall mount this single-piece air handler unit.
- Normal operating sound levels may be objectionable if the air handler is placed directly over some rooms, such as bedrooms or a study.
- Select a location that permits installation of the condensate line to an open drain or outdoors, allowing condensate to drain away from the structure.

NOTICE

The primary and secondary drain lines must be trapped to allow adequate drainage of condensate water. The secondary drain line must be piped to a location that gives the occupant a visual warning that the primary drain is clogged. If the secondary drain line is not used, it must be capped.

- When installing an indoor coil in an attic or above a finished ceiling, you must use an auxiliary drain pan under the air handler as is specified by most local building codes.
- A sufficient electrical supply must be available.
- If locating the unit in an area of high humidity, such as an unconditioned garage or attic, nuisance sweating of the casing may occur. On these installations, completely seal the unit duct connections and other openings, and use a wrap of 2 in. fiberglass insulation with vinyl vapor barrier.

ⓘ **Note:** A combustible floor base accessory is available for downflow applications of this unit, if required by local code.

Providing the required clearances

It is essential to provide the following clearances:

- Refrigerant piping and connections - minimum 12 in.
- Maintenance and servicing access - minimum 36 in. from the front of the unit for blower motor or coil replacement
- Condensate drain lines routed to clear filter and panel access
- Filter removal - minimum 36 in.
- The supply air ductwork connected to this unit is designed for 1 in. clearance for the first 18 in. of combustible materials if an electric heat kit is installed.

ⓘ **Note:** You must maintain clearances for servicing and allow access to the electric heaters and blower.

Performing a pressure check

About this task:
It is important to perform a pressure check before you begin installing the unit.

Figure 5: Pressure check

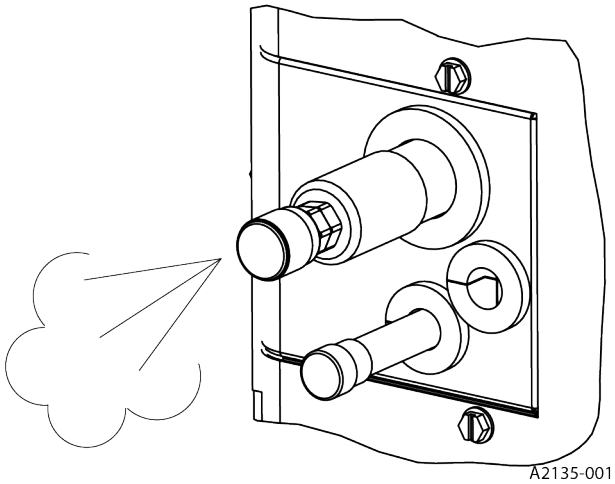

- Depress the Schrader valve core one time to check for pressure.

Understanding installation and operation limitations

Adhere to the following:

- The size of the unit must be based on an acceptable heat loss or gain calculation for the structure. Use Air Conditioning Contractors of America (ACCA) Manual J or another approved method.
- Only connect the air handler to a duct system that has an external static pressure within the allowable range.
- Airflow must be within the minimum and maximum limits approved for electric heat, indoor coils, and outdoor units.

Entering air temperature limits			
Wet bulb temperature (°F)		**Dry bulb temperature (°F)**	
Minimum	Maximum	Minimum	Maximum
57	72	65	95

- When installing an air handler so that supply ducts carry air circulated by the air handler to areas outside the space containing the air handler, the return air is also handled by one or more ducts sealed to the air handler casing and terminating in the space to be cooled or heated.
- The nameplate displays the air handler model number. The unit dimensions for the supply air plenum are provided in Dimensions. Always install the plenum according to the instructions.
- Check the available supply power and verify that it is in the normal operating voltage range for the unit. The acceptable voltage range for these units is shown in the following table.

Air handler voltage	Normal operating voltage range[1]
208/230-1-60	187 V to 253 V

1 Rated in accordance with ARI Standard 110, utilization range A

Becoming familiar with the unit components

Make sure that you are familiar with the unit components before you begin the installation. See Figure 6.

Figure 6: Return air duct attachment and component location

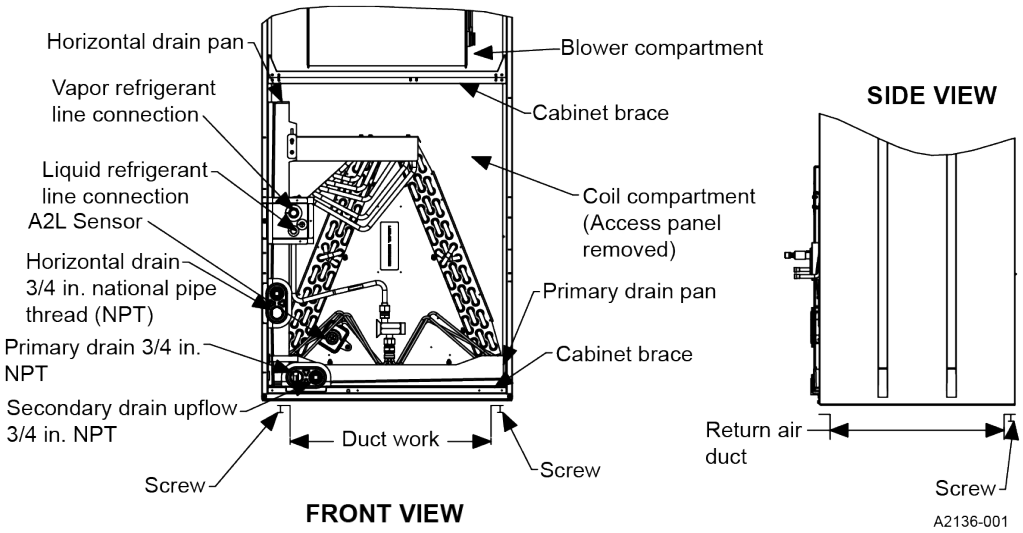

Becoming familiar with the unit dimensions

- Make sure that you are familiar with the unit dimensions before you begin the installation. See Figure 7 and Table 8.

Figure 7: Dimensions and duct connection dimensions

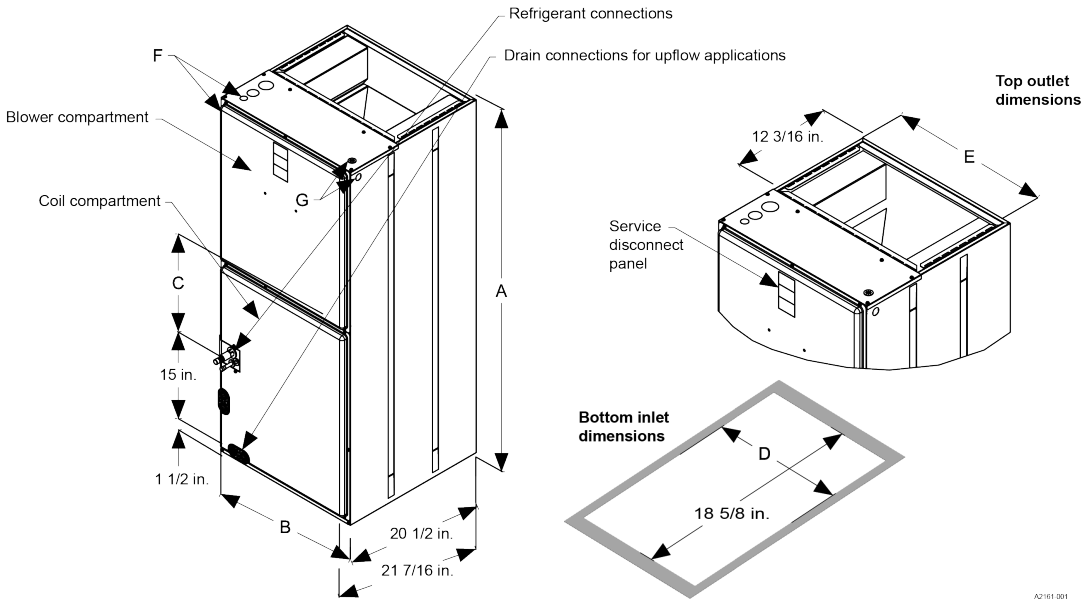

Table 8: Dimensions

Models	Dimensions					Wiring knockouts (actual conduit size)		Refrigerant connections line size	
	A	B	C	D	E	F	G		
	Height (in.)	Width (in.)	Opening widths (in.)			Power (in.)	Control (in.)	Liquid (in.)	Vapor (in.)
JHE18B5*B2SS	45 5/8	17 1/2	7 1/2	16 1/2	16 1/2	7/8 (1/2) 1 3/8 (1) 1 23/32 (1 1/4)	7/8 (1/2)	3/8	3/4
JHE24B5*C2SS	48 3/8	17 1/2	10	16 1/2	16 1/2				
JHE30B5*D2SS	48 3/8	17 1/2	10	16 1/2	16 1/2				
JHE36B5*D2SS	48 3/8	17 1/2	10	16 1/2	16 1/2				
JHE36C5*D2SS	49 5/8	21	11 1/2	20	20				
JHE42C5*F2SS	55 5/8	21	17 1/2	20	20				7/8
JHE48C5*G2SS	60	21	21 3/4	20	20				
JHE48D5*G2SS	60	24 1/2	21 3/4	23 1/2	23 1/2				
JHE60C5*H2SS	61 6/8	21	23 1/2	20	20				
JHE60D5*H2SS	61 6/8	24 1/2	23 1/2	23 1/2	23 1/2				
JHE60D5*J2SS	60	24 1/2	21 3/4	23 1/2	23 1/2				

Installing an electric heat kit

About this task:
If the air handler requires electric heat, use only 8HK heater kits, as listed on the air handler nameplate and in these instructions.

Important:

- You connect the wiring for the electric heat kit as part of the procedures outlined in Connecting the wiring.
- If the air handler does not require electric heat, mark the nameplate to indicate that no electric heat kit is installed.

Use data from Unit data for information on the required minimum motor speed tap to use for heating operation and the maximum overcurrent protection device required as listed for the air handler and electric heat kit combination.

NOTICE

In some horizontal applications, the service disconnects on the electric heat kits must be rotated 180° so the up position of the disconnect is the ON position. This service disconnect orientation change is required by UL 60335-2-40 (in reference to all circuit breakers).

For all other applications, the kits can be installed without modification.

NOTICE

All wiring must comply with local and national electrical code requirements. Read and heed all unit caution labels.

To install an electric heat kit, do the following:

1. Install the electric heat kit according to the installation instructions included with the kit.
2. After installing the electric heat kit, mark the air handler name plate to designate the electric heat kit that was installed.

What to do next:
Install the unit.

Installing the unit

NOTICE

Do not handle aluminum coil components after handling the copper refrigeration piping or other tubing without first cleaning your hands.

To install the unit correctly, you must do the following:

1. Design and install the ductwork if required.
2. Consider air handler configuration options. Convert the unit for downflow or horizontal right use then install a horizontal baffle plate - if applicable.
3. Suspend the unit in a horizontal application - if applicable.
4. Set up the duct flanges.
5. Connect the supply and return air ductwork.
6. Install the air filters.
7. Connect the condensate drain lines.

Designing and installing the ductwork

About this task:
Air supply and return may be handled in one of several ways best suited to the installation. Upflow, horizontal, or downflow applications may be used. The vast majority of problems encountered with heating and cooling systems can be linked to incorrectly designed or installed duct systems. It is therefore highly important to the success of an installation that the duct system be correctly designed and installed.

ⓘ **Note:** Ductwork that is not designed to match the supply air opening can cause turbulence inside the plenum. This turbulence can change the airflow patterns across electric heater limit switches.

⚠ WARNING

Do not bring in return air from a location which could introduce hazardous substances into the airflow.

Use 1/2 in. screws to connect ductwork to the cabinet. If pilot holes are drilled, drill only through the field duct and the unit flange.

⚠ CAUTION

This unit is not designed for non-ducted (freeblow) applications. Do not operate without ductwork attached to the unit.

Never operate the equipment without filters.

To design and install the ductwork, do the following:

- When installing a central air return grille in or near the living space, design the ductwork so that the grille is not in direct line with the opening in the unit. One or two elbows and acoustical duct liner ensure a quieter system. For operation where the return air duct is short or where sound may be a problem, use acoustical duct liner inside the duct.
- You must insulate ductwork where it runs through an unheated space during the heating season or through an uncooled space during the cooling season. Use a vapor barrier to prevent absorption of moisture from the surrounding air into the insulation.
- Be aware that you must use a transition to securely connect the supply air duct to the unit opening.
- Suspend all ducts using flexible hangers and never fasten directly to the structure.
- You must fabricate and install ductwork in accordance with local and national codes. This includes the standards of the National Fire Protection Association for Installation of Air-Conditioning and Ventilating Systems, NFPA No. 90B. If using electric heat, you must use a non-flammable material. Duct systems must be designed in accordance with ACCA Manual D.

Understanding unit configuration

About this task:
These air handler units are supplied ready to install in an upflow or horizontal left position. A horizontal drain pan is factory installed.

1. See Figure 8 to determine what configuration option to choose.

Figure 8: Configuration options

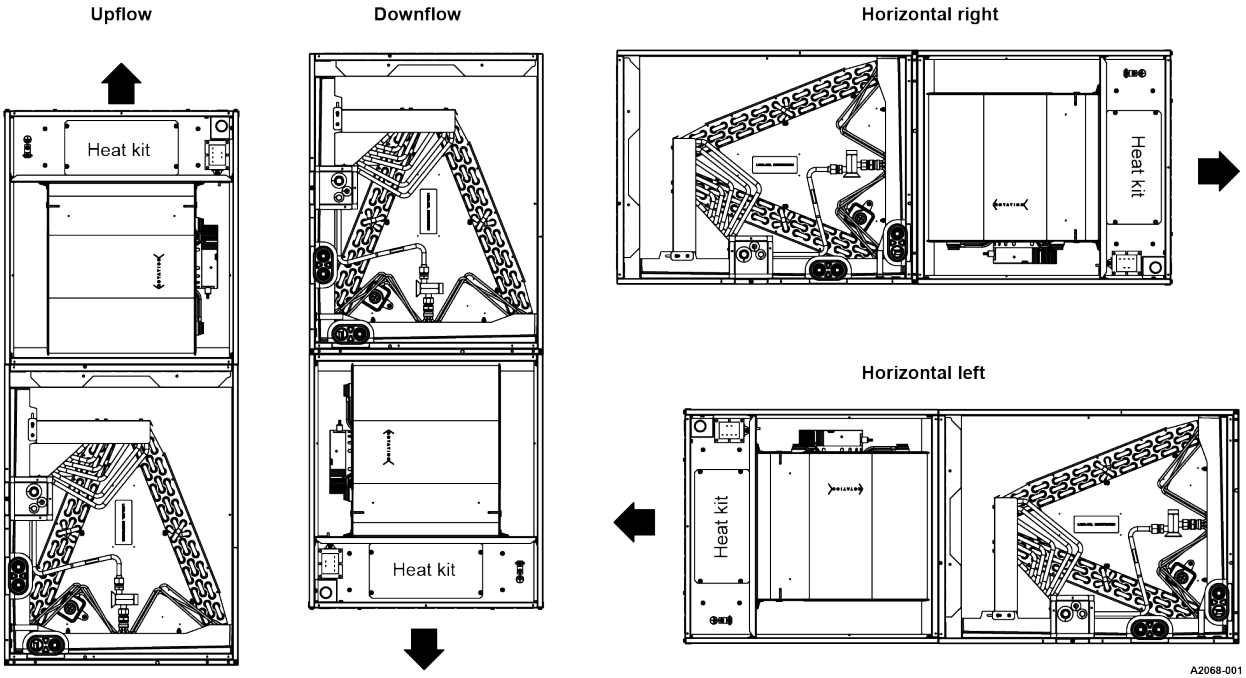

2. If you require either a downflow or horizontal right airflow configuration, you must reposition the coil assembly. See Converting the unit for downflow or horizontal right use.

Converting the unit for downflow or horizontal right use

About this task:

NOTICE
Convert the air handler to the required orientation before installation. Conversion must be made before brazing the refrigerant connections to the coil.

To convert the unit for downflow or horizontal right use, do the following:

1. Remove the coil and blower access panel.
2. Remove the RDS control board cover and disconnect the A2L refrigerant sensor wire from the control board so that the sensor can be removed with the coil without detaching the sensor from the coil.
3. Slide the coil and drain pan assembly out of the air handler cabinet.
4. Turn the air handler cabinet upside down so that it is in the downflow position.
5. If installing a 48C5CG or 60C5CH model in a horizontal right position, install the horizontal baffle plate shipped with the unit. The horizontal baffle plate must be secured to the coil delta plates. See Installing a horizontal baffle plate.
6. After installing a horizontal baffle plate (if applicable), slide the coil and drain pan assembly back into the air handler cabinet.
7. Route the A2L refrigerant sensor wire out of the coil compartment by passing through the opening for it in the tubing access panel. See Figure 15. Install the included grommet to protect the sensor wire. Route the sensor wire into the air handler cabinet low voltage wiring opening and back into the RDS control box. Re-connect the sensor to the control.
8. Reattach the access panels.

Installing a horizontal baffle plate

About this task:
Follow these steps to install a horizontal baffle plate, if applicable.

1. With the coil removed from the air handling unit and laying on its horizontal drain pan, locate the pre-drilled holes in the front and rear coil delta plates.
2. Insert the horizontal baffle plate into the end of the coil. Insert one end of the horizontal baffle plate into the top side of the primary drain pan as shown in Suspending the unit in horizontal applications.
3. Secure the horizontal baffle plate in place with two screws, one in the front delta plate and one in the rear delta plate. See Suspending the unit in horizontal applications.

Figure 9: Horizontal baffle plate installation

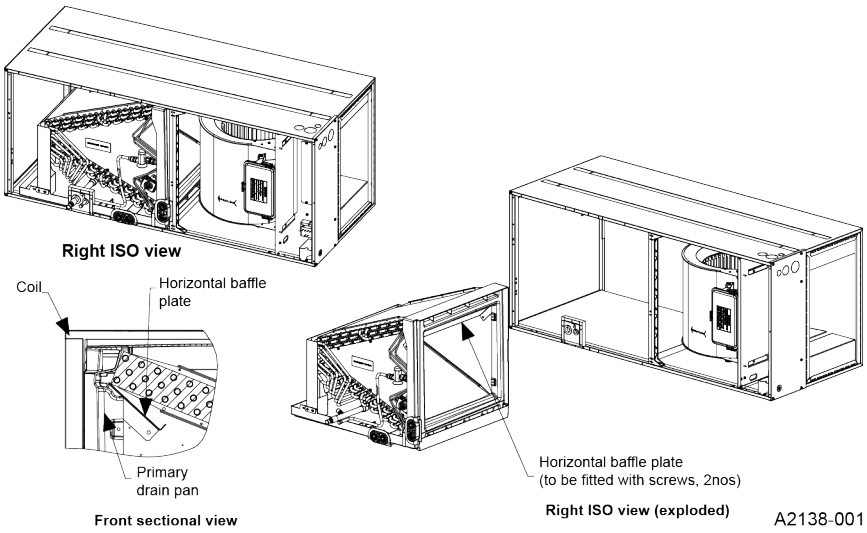

ⓘ **Note:** For horizontal applications, set the unit so that it is sloped 1/4 in. towards the drain line connection.

What to do next:
Return to Converting the unit for downflow or horizontal right use and complete the task from Step 5.

Suspending the unit in horizontal applications

About this task:
These air handlers may be suspended in horizontal applications. Use angle steel support brackets with minimum 3/8 in. threaded rods, supporting the unit from the bottom.

⚠ CAUTION

Do not lift the air handler by the cabinet braces. The cabinet braces could become disengaged from the cabinet causing the air handler to fall, potentially causing injury or damaging property. See Becoming familiar with the unit components for the location of the cabinet braces. Lift the air handler by tightly gripping the casing.

NOTICE

When assembling the support structure, size to provide clearance for access door removal.

To suspend the unit in a horizontal application, complete the following steps:

1. Install angle steel support brackets in your chosen installation location.
2. Attach the threaded rods at the locations shown in Figure 10, leaving enough clearance between the door and the rod so that doors can be easily removed for service. See Table 8 for the dimensions for the specific model.

Figure 10: Suspension support locations for horizontal applications

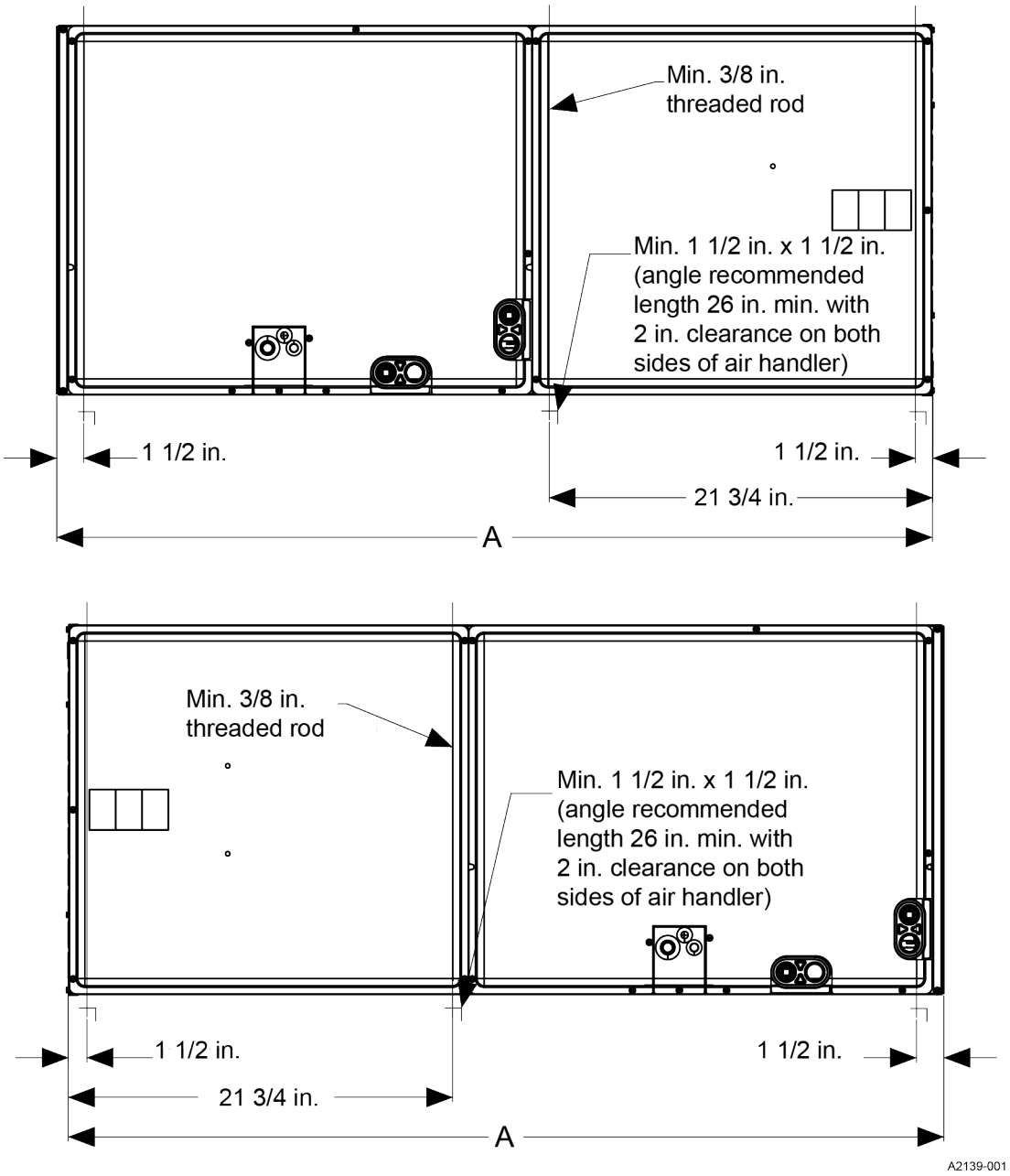

Using the duct flanges

To use the duct flanges that are integrated into the casing, do the following:

1. Fold the flanges open into position.
2. Anchor the flanges with screws.

Figure 11: Duct attachment

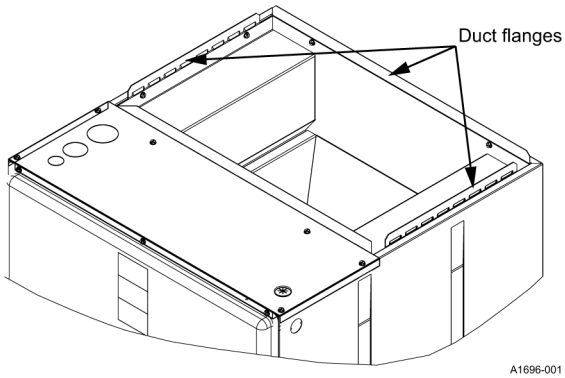

Connecting the unit to the ductwork

About this task:
There are several ways to handle the supply and return air duct connections. The location and sizing of the connections depends on the situation and the method best suited to the installation. Upflow, horizontal, or downflow applications may be used. Use flexible duct connectors to minimize the transmission of vibration and noise into the conditioned space.

CAUTION

Use 1/2 in. screws to connect ductwork to the unit. Longer screws may pierce the drain pan and cause leakage. If drilling pilot holes, drill only though the field duct and the unit bottom duct flange.

Note: Ductwork that is not designed to match the supply air opening can cause turbulence inside the plenum. This turbulence can change the airflow patterns across electric heater limit switches.

To connect the unit to the ductwork, do the following:

1. Use a transition to securely connect the supply air duct to the unit opening. See Becoming familiar with the unit dimensions for air handler unit inlet and outlet dimensions.
2. If you cannot fabricate the recommended transition, attach a block-off plate approximately 8 in. high and running the full width of the plenum to the supply opening. See Figure 12. Using this block-off plate enables better air circulation across the limit switches.

Figure 12: Ductwork transition

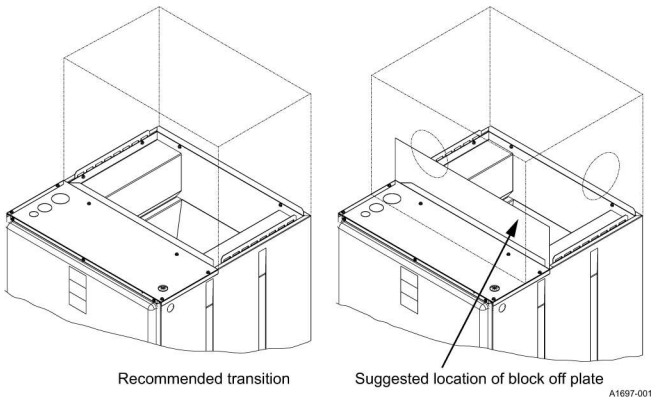

Installing the air filters

About this task:

⚠ CAUTION
Never operate the equipment without filters.

You must install return air filters. Filters are field supplied and filtration must be accomplished external to the unit.

To install air filters, do the following:

- Secure the air filters in the return air ductwork as required.

Connecting the condensate drain lines

About this task:
Adhere to the following when connecting the condensate drain lines.

- Pitch all drain lines 1/4 in./ft away from the unit drain pan and ensure that the drain lines are no smaller than the coil drain connection.
- Route the drain line so that it does not impede access to the coil, air handling system, or filter and it is not exposed to freezing temperatures.
- Instruct the homeowner that the indoor coil drain pan must be inspected and cleaned regularly to prevent odors and ensure sufficient drainage.
- Install the air handling unit pitched slightly toward the drain end.
- If the coil has a secondary drain, pipe it to a location that gives the occupant a visual warning that the primary drain is clogged. If not using a secondary drain, you must plug the secondary drain.

  ⓘ **Note:** You can remove drain plugs using a standard 3/8 in. drive socket ratchet.

⚠ CAUTION
Avoid double trapping.

⚠ CAUTION
Threaded drain connections must be hand tightened and by no more than one turn.

⚠ CAUTION
Do not use PTFE tape, pipe thread compound, or other sealants. Use of a sealant can cause damage and premature failure of the drain pan.

Figure 13: Location of coil trapped and plugged drain connections

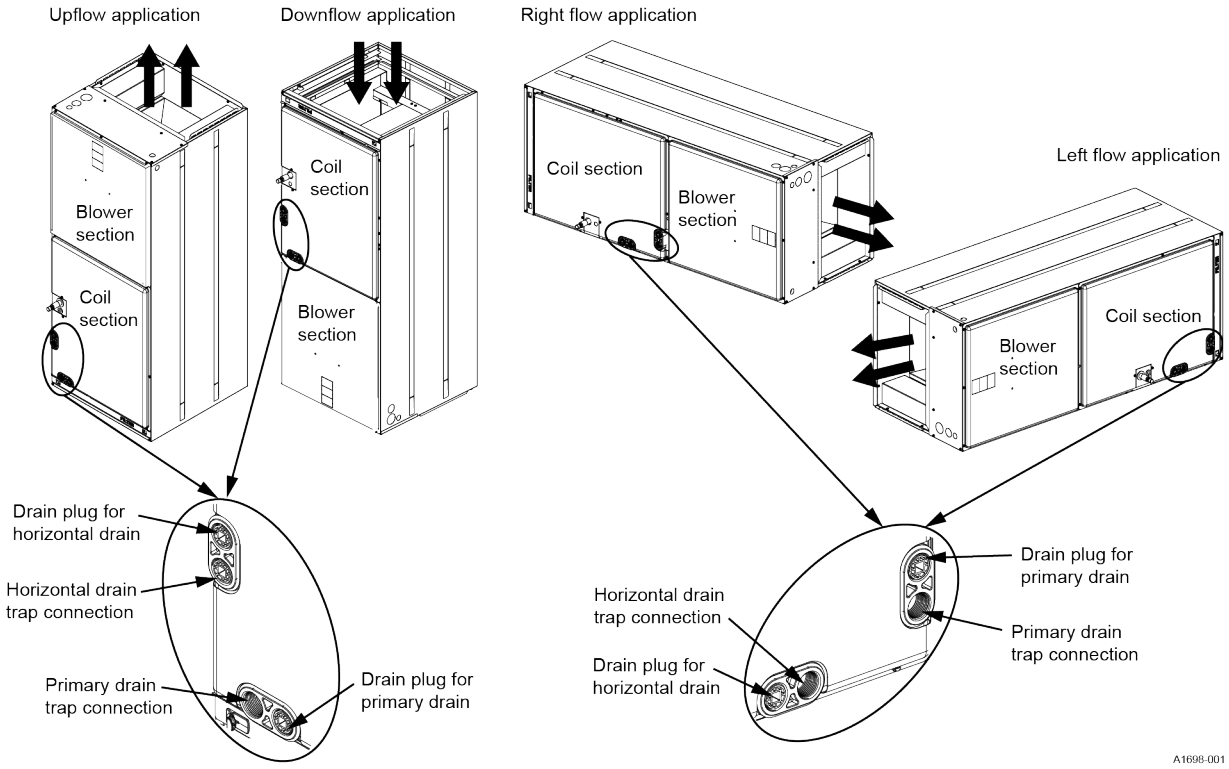

Figure 14: Drain traps

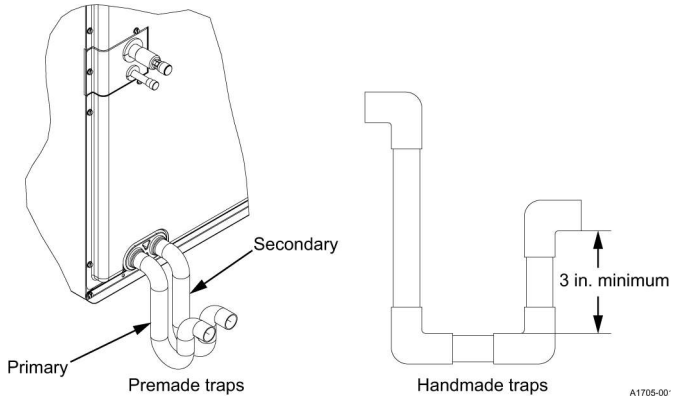

What to do next:
Install the refrigerant piping.

Installing the refrigerant piping

Perform the following steps to install the refrigerant piping:

1. Prepare to connect the refrigerant lines.
2. Choose either to braze the refrigerant lines or to use braze-free connections.
3. Check for leaks, then evacuate and charge the system.
4. Complete the refrigerant piping installation.

Preparing to connect the refrigerant lines

About this task:

CAUTION

The coil is under inert gas pressure. Relieve pressure from the coil by depressing the Schrader valve core at the end of the suction manifold stub out.

CAUTION

Dry nitrogen must always be supplied through the tubing while it is being brazed, because the temperature required is high enough to cause oxidation of the copper unless an inert atmosphere is provided. The flow of dry nitrogen must continue until the joint has cooled. Always use a pressure regulator and safety valve to ensure that only low pressure dry nitrogen is introduced into the tubing. Only a small flow is necessary to displace air and prevent oxidation.

NOTICE

Do not handle aluminum coil components after handling the copper refrigeration piping or other tubing without first cleaning your hands.

Depending on the coil model and application, it is possible to connect the refrigerant lines in one of two ways: by brazing the connections or by using non-braze connections.

Some coil models have lines that are expanded to receive the field refrigeration piping, and some coil models have straight piping connections ready to accept braze-free connectors. You can still use these straight piping connections for brazing, but you need to expand the pipe in the field using a swage tool. Alternatively, you can use a sweat coupling. Make suction and liquid line connections outside of the cabinet. Leave the tubing connection panel attached to the cabinet. If you are brazing the connections, remove the coil access panel.

What to do next:
Choose between brazing the refrigerant lines, or using braze-free refrigerant line connections, then follow Brazing the refrigerant lines or Using braze-free refrigerant line connections.

Brazing the refrigerant lines

About this task:
The following steps explain how to braze the refrigerant lines. For braze-free connections, see Using braze-free refrigerant line connections.

⚠ CAUTION

Dry nitrogen should always be supplied through the tubing while it is being brazed, because the temperature required is high enough to cause oxidation of the copper unless an inert atmosphere is provided. The flow of dry nitrogen should continue until the joint has cooled. Always use a pressure regulator and safety valve to ensure that only low pressure dry nitrogen is introduced into the tubing. Only a small flow is necessary to displace air and prevent oxidation.

1. Remove the grommets where tubes exit the cabinet to prevent burning them during brazing. In some units, the vapor line grommet may be shipped as a loose part with the unit.
2. Cut the end of the suction tube using a tube cutter. Place the tube cutter as close as possible to the end of the tube to allow as much depth as possible for the connection and brazing of the suction line. To ensure that the suction line fits into the connection, deburr the stub-out, including inner pressure protrusion from cutting.
3. Remove the liquid line copper cap that is soft soldered onto the outside of the 3/8 in. stub protruding from the front of the coil cabinet tubing panel as follows:
   a. Screw a sheet metal screw into the center of the cap.
   b. Apply a small amount of heat to the cap while pulling on the screw using slip joint pliers.
4. Insert the liquid line and the suction line into the coil connections at the coil cabinet tubing panel.
5. Wrap a water-soaked rag around the coil connection tubes inside the cabinet to avoid transferring excess heat to the coil and the TXV.
6. Purge the refrigerant lines with dry nitrogen during brazing.

NOTICE

All indoor coil connections are copper-to-copper and must be brazed with a phosphorous-copper alloy material such as Silfos-5 or equivalent. **Do not** use soft solder.

7. Braze the suction line and the liquid line, and allow the joints to cool.
8. Secure the sensing bulb and equalizer line capillary tubes with nylon cable ties to prevent leaks from the tubes rubbing.
9. Install the grommets to the lines carefully to prevent air leakage. In some units, the vapor line grommet may be shipped as a loose part with the unit. See Figure 15.

Figure 15: Vapor line grommet

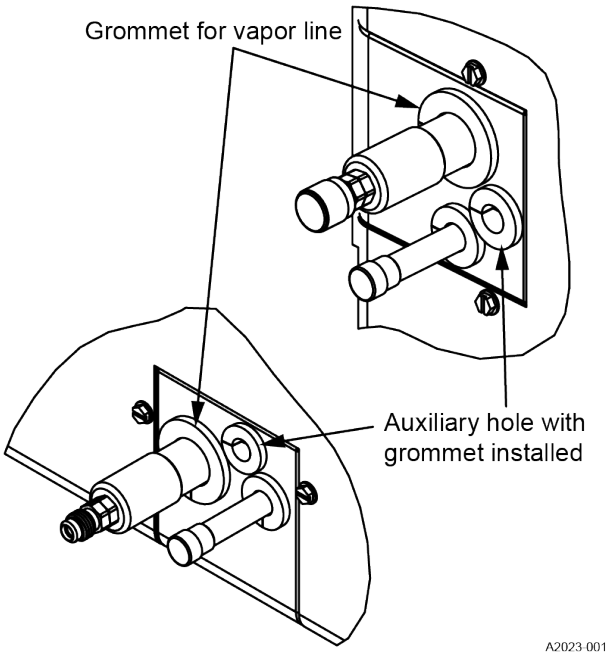

What to do next:
Check for leaks, evacuate, and charge the unit.

Using braze-free refrigerant line connections

About this task:
The following steps explain how to use braze-free refrigerant line connections. For brazed connections, see Brazing the refrigerant lines.

1. Remove the grommets where suction tube exits the cabinet. In some units, the vapor line grommet may be shipped as a loose part with the unit.
2. Remove the coil door but leave the tubing access panel in place.
3. Cut the end of the suction tube using a tube cutter. Place the tube cutter as close as possible to the end of the tube to allow as much straight tubing as possible for the braze-free connector. Deburr the stub-out after cutting.
4. Push the liquid line back into the coil for better access to the suction line if the liquid line is already installed.
5. Fit a braze-free connector and the field suction line into the coil suction line connection at the coil cabinet tubing panel. Complete the suction line connection.
6. Install the liquid line on the TXV if not factory installed. Bring the liquid line back out towards the front of the coil and removed the closed end using a tubing cutter. De-burr the stub-out after cutting. Fit a braze-free connector and the field liquid line into the coil liquid line connection at the coil cabinet tubing panel. Complete the liquid line connection.
7. Secure the TXV sensing bulb and equalizer line capillary tubes with nylon cable ties to prevent leaks from the tubes rubbing.
8. Install the grommets to the lines carefully to prevent air leakage. In some units, the vapor line grommet may be shipped as a loose part with the unit. See Figure 15.

What to do next:
Check for leaks, evacuate, and charge the unit.

Checking for leaks, evacuating, and charging the unit

Refer to the *Installation Manual* for the outdoor unit and complete the leak check, evacuation, and charging according to the instructions provided. Check all field-brazed joints and metering device connections.

Completing the refrigerant piping

Before you begin:
Make sure that you have connected the refrigerant lines using the brazing or non-braze method before you complete the final refrigerant piping installation steps.

1. Attach the coil access panel to the cabinet.
2. Ensure that the lines are sound isolated by using the appropriate hangers or strapping.

What to do next:
Connect the wiring.

Connecting the wiring

Before you begin:
See Wiring diagram for relevant wiring diagrams.

NOTICE

All wiring must comply with local and national electrical code requirements. Read and heed all unit caution labels.

To connect the wiring correctly, you must do the following:

1. Connect the power line.
2. Connect the low-voltage control wiring.
3. Familiarize yourself with the standard ECM nine-tap blower motor speed selection options.
4. Set the blower motor speed.

Connecting the power line

WARNING

Before obtaining access to terminals, all supply circuits must be disconnected.

WARNING

A fused disconnect switch must be field provided for the unit to be in compliance with UL 60335-2-40 Clause 7.12.2.

Important: Refer to the installation instructions for the electric heat kit for additional information about connecting the wiring for the electric heat kit as needed.

- Power can be brought into the unit through the supply air end of the unit (top left when unit is vertical) or the left side panel.
- The power lead conduit must be terminated at the electrical control box.
- See the tables in Unit data and the latest edition of the National Electric Code, or in Canada the Canadian electrical Code, and local codes to determine correct wire sizing.
- All electrical connections to air handlers must be made with copper conductors. **Direct connection of aluminum wiring to air handlers is not approved. If aluminum conductors are present, all applicable local and national codes must be followed when converting from aluminum to copper conductors before connection to the air handler.**
- The chosen conductor and connections must all meet or exceed the amperage rating of the overcurrent protector (service disconnect or fuse) in the circuit.
- See Figure 16 for line connection information specific to this installation.

Figure 16: Line power connections

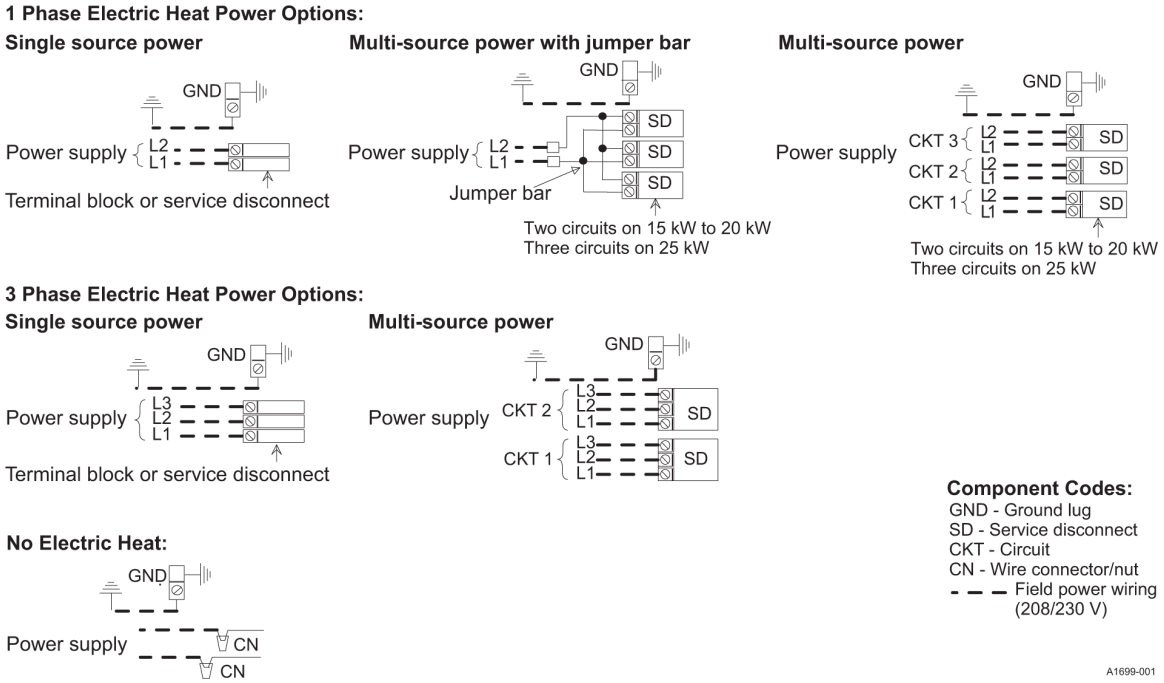

Complete the following steps to connect the power line to the unit:

1. Route the power lead conduit from the service disconnect to the electrical control box. Use the hole appropriate to the unit's orientation in each installation to bring the conduit from the disconnect.
2. Seal the wiring entry point on the outside of the unit to minimize air leakage.

Connecting the low-voltage control wiring

About this task:

Important: Refer to the installation instructions for the electric heat kit for additional information about connecting the wiring for the electric heat kit as needed.

- The 24 V power supply is provided by an internally wired low voltage transformer that is standard on all models. If connecting the unit to a 208 V power supply, the low voltage transformer must be rewired to the 208 V tap. See Figure 27.
- Field supplied low voltage wiring can exit the unit through the top right (when the unit is vertical upflow) or the right side panel. See Becoming familiar with the unit dimensions. Remove the knockout and pierce the foil faced insulation to allow wiring to pass through. Use as small of a hole as possible to minimize air leakage. Install a 7/8 in. plastic bushing in the selected hole and keep low voltage wiring as short as possible inside the control box.
- To further minimize air leakage, seal the wiring entry point at the outside of the unit. Connect the outdoor unit field wiring at the pigtails supplied with the air handler. **The room thermostat field wiring is connected directly to the air handler refrigerant detection system (RDS) control board.** See JHE thermostat wiring diagrams for low voltage system wiring.

NOTICE

All wiring must comply with local and national electrical code requirements. Read and heed all unit caution labels.

Figure 17: Refrigerant detection system (RDS) control board

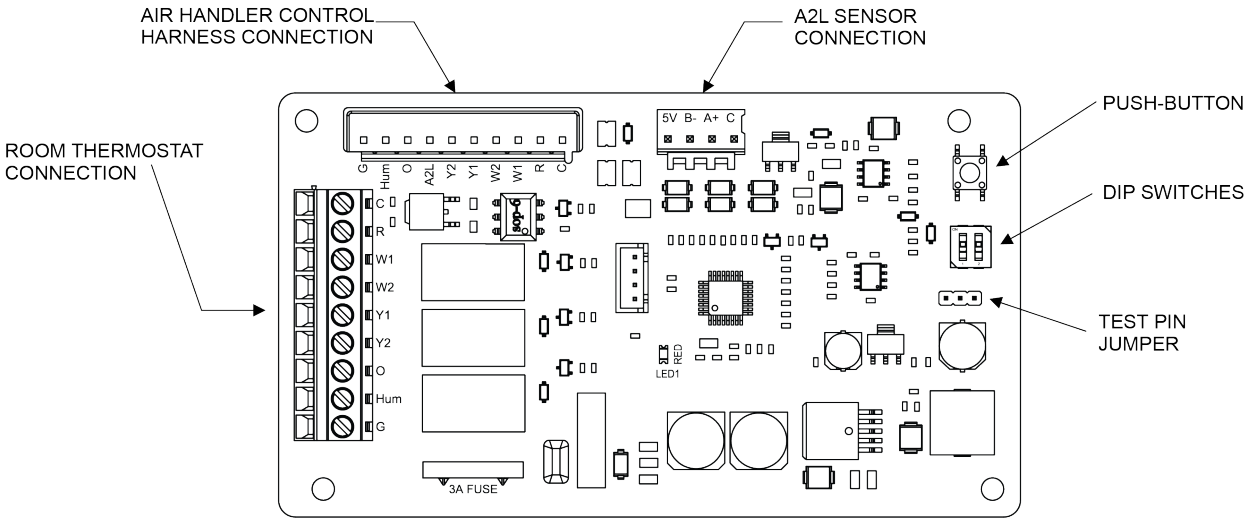

JHE thermostat wiring diagrams

Figure 18: JHE unit wiring to standard single stage heat pump

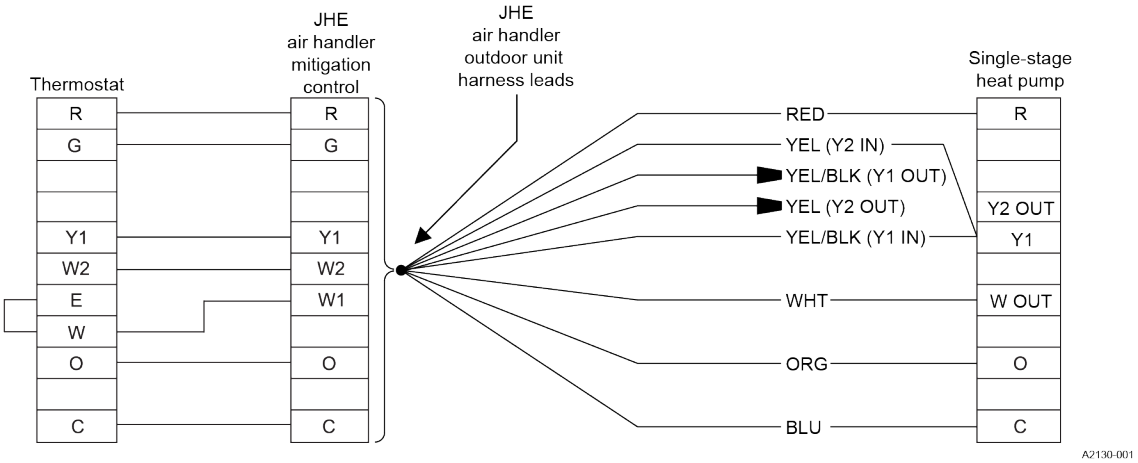

Figure 19: JHE unit wiring to standard multi-stage heat pump

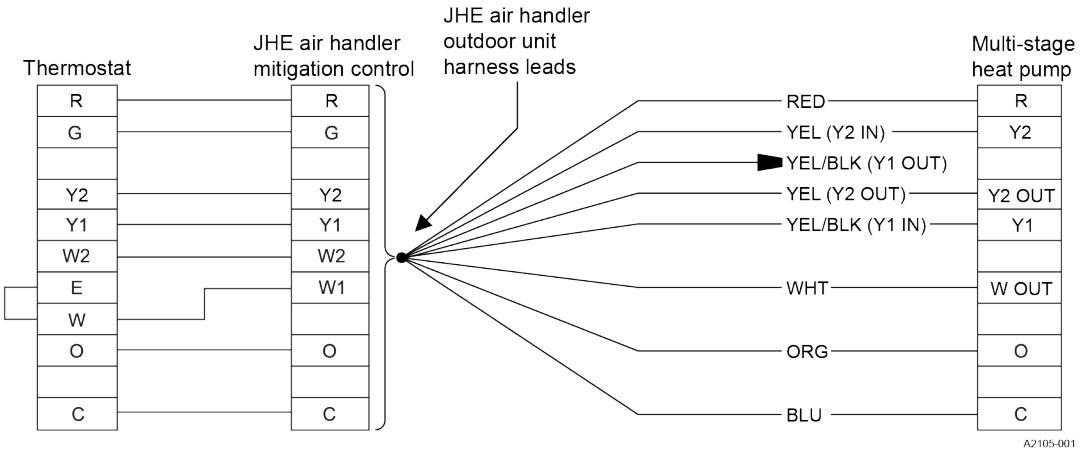

Figure 20: JHE unit wiring to premium multi-stage heat pump

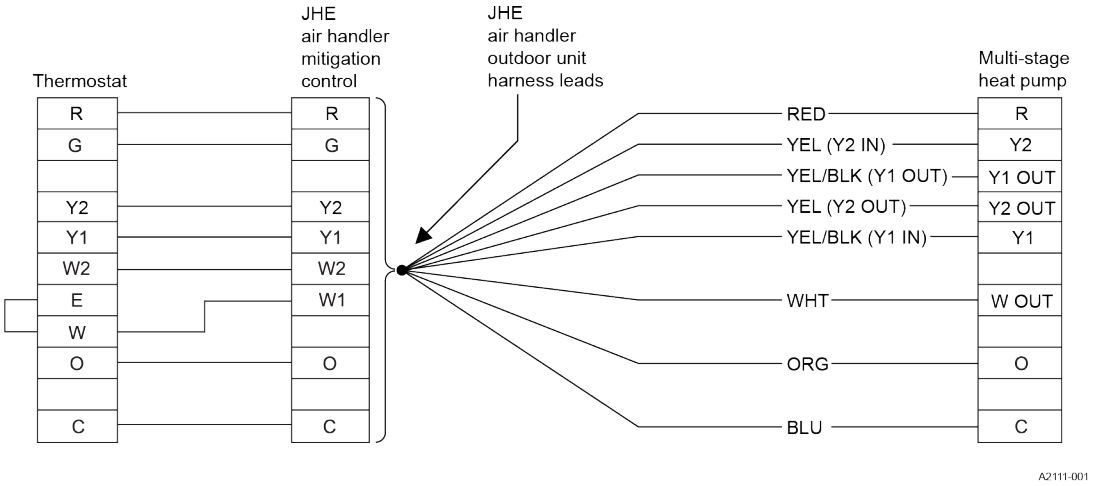

Figure 21: JHE unit wiring to single stage AC

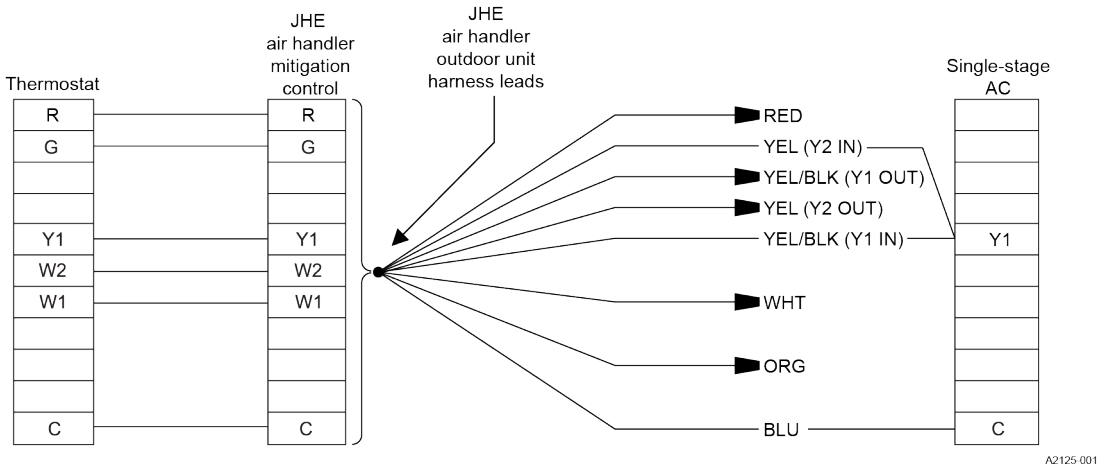

Figure 22: JHE unit wiring to multi-stage AC

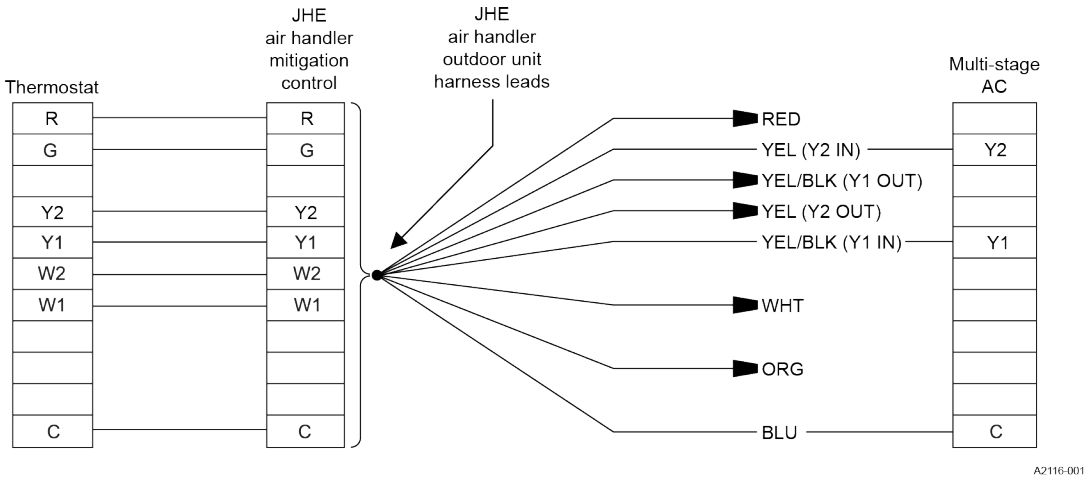

Figure 23: JHE unit wiring to HH8 heat pump

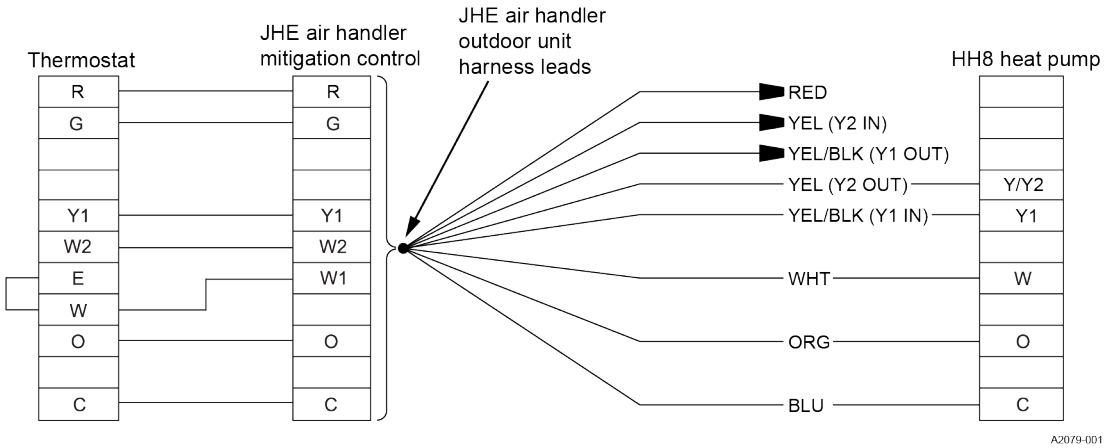

Understanding the standard ECM nine-tap blower motor speed selections

JHE and JME standard ECM air handling units use a blower motor programming strategy that provides nine different torque (speed) selections instead of the standard five speeds. The motor still physically only has the same five speed tap wiring connections labeled 1, 2, 3, 4, and 5. The new strategy is referred to as nine-tap standard ECM. The motors used in previous models appear the same, but a programming change is what makes the motor usable as a nine-tap standard ECM.

Five-tap standard ECM motors can have simultaneous 24 VAC input signals (thermostat calls) provided, and when they do, the motor prioritizes the input signal on the highest number of input tap selected. For example, if a five-tap standard ECM motor had calls on input tap 2 and input tap 4, the motor ignores tap 2 and operates the motor for the torque (speed) programmed on tap 4.

When a nine-tap standard ECM motor receives a single input on tap 1 to tap 5, the motor operates on the speed tap that is energized. Simultaneous speed taps can still be energized, but when they are, the motor selects the two highest number input taps energized, and those translate into programmed torque (speeds) 6, 7, 8, or 9. See Table 9.

If there was a simultaneous 24 VAC input on tap 2 and tap 3, the motor would operate on the torque (speed) programmed for tap 6. As another example, if a nine-tap standard ECM motor has simultaneous 24 VAC input signal on taps 1, 3 and 4, the motor would ignore the input on tap 1. Tap 3 and 4 would take priority and the motor would operate on the torque (speed) programmed for tap 8.

Table 9: Nine-tap standard ECM tap motor programming

Input tap numbers				Operating programmed speed tap number
1				1
2				2
3				3
4				4
5				5
1 and 2		2 and 3		6
1 and 3		2 and 4		7
1 and 4		3 and 4		8
1 and 5	2 and 5	3 and 5	4 and 5	9

The refrigerant detection system (RDS) contains a bank of two DIP switches. Ensure the switches are set in the 0,0 or OFF, OFF position for use with the nine-tap standard ECM motor. When the switches are in the OFF positions, the RDS does not allow the circulating blower speed (G) signal to pass through during compressor (Y) calls.

The room thermostat must be set to provide a circulating blower (G) signal any time there is an electric heat (W) signal. This setting is by default on most room thermostats.

The circulating blower input (G signal) has a double-tap connection. For most applications, leave one of the G signal connections connected to its factory default position on speed tap 1 and leave the electric heat kit speed tap connected to its factory default position on speed tap 5.

Additional information

To better visualize the many speed tap input possibilities and airflow selection on a multi-stage heat pump application, read the following additional information:

At system commissioning, it is determined that low-speed compressor heating needs to use speed tap 4 and high-speed compressor heating needs to use speed tap 8. The installer would place low-speed compressor cooling or heating (Y1) input on motor speed tap input 4 and the high-speed compressor cooling or heating (Y2) input on speed tap 3. As the RDS does not allow the circulating blower speed (G) signal to pass through during compressor (Y) calls, the only motor input during a single-stage compressor cooling or heating call would be on speed tap 4. During a call for high-speed compressor cooling or heating, there is always a Y1 call (input on tap 4) accompanying the Y2 call (input on tap 3) and in this case, the motor would translate simultaneous input on tap 3 + tap 4 as torque (speed) programmed as tap 8.

Most of the electric heat minimum fan speeds are 7 to 9. An emergency electric heat call (W signal) is always accompanied by a circulating blower call (G signal), so in this example, the motor translates a simultaneous input on speed tap 1 + speed tap 5 as torque (speed) programmed as tap 9. If the compressor was operating providing full speed (Y1+Y2) heat pump heating and a call came in for auxiliary or supplemental heating, the motor would have an input on speed tap 3 + speed tap 4 + speed tap 5. The motor would ignore the input on speed tap 3 and translate the speed tap inputs on 4 and 5 as speed torque (speed) programmed as tap 9.

Setting the blower motor speed

- Adjust the blower motor speed to provide airflow within the minimum and maximum limits approved for indoor coils, electric heat, and outdoor units. Make speed tap adjustments at the motor terminal block.
- The circulating blower (green) thermostat input is factory connected to speed tap 1 and tap 2, which translates into programmed speed tap 6 as shown in 9 tap table. The circulating blower (yellow/black) thermostat input is used for first stage cooling or heat pump heating blower speed. The circulating blower (yellow) thermostat input is used for the second-stage cooling or heat pump heating blower speed. If using a single-stage outdoor section, the Y1 and Y/Y2 inputs must be bonded together. See Wiring diagram for wiring details.
- Pay close attention to the outdoor unit field wiring. It must connect to the outdoor section wiring harness. Depending on what type of outdoor section being used, the Y1 and or Y2 disconnects may or may not have to be disconnected from each other. See the notes below and specific field wiring diagram based on equipment used.

  ⓘ **Note:** Each of the standard ECM blower motor speed taps have a built-in 60 s off delay.

- Consult the following list for connectors information:
  - For setups without an outdoor control: Leave the Y1/Y2 connectors attached.
  - For setups with an outdoor control that has no Y1 OUT or Y2 OUT: Leave Y1/Y2 connectors attached.
  - For setups with an outdoor control that does have Y1 OUT: Separate the Y1 connectors.
  - For setups with an outdoor control that does have Y2 OUT: Separate the Y2 connectors.
  - The thermostat must be set up to send a W1 call accompanied with a G call to achieve the required heat hit airflow.

Figure 24: Blower speed connections

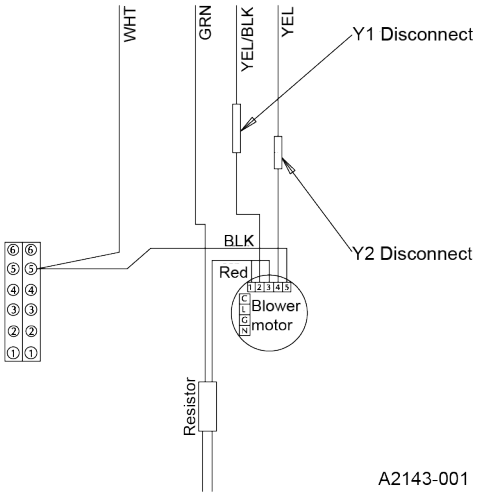

What to do next:
Adjust the air system.

Adjusting the air system

About this task:
You must adjust the air system to keep the CFM within the airflow limitations of the indoor coil if needed. To check the cubic feet per minute (CFM), measure the external duct static pressure using a manometer and static pressure tips. Figure 25 shows how to use a manometer to measure external duct static pressure.

Figure 25: Duct static measurements

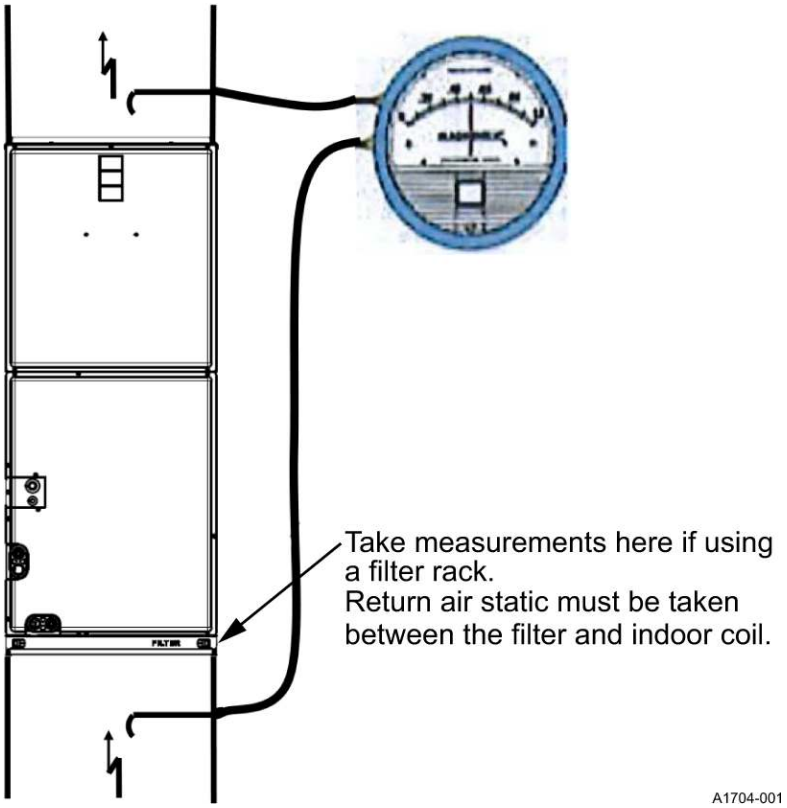

To adjust the air system, do the following:

1. To prepare the coil for static pressure measurements, run only the fan to ensure a dry coil.
2. Drill two holes, one 12 in. away from the air handler in the supply air duct and one 12 in. away from the air handler in the return air duct, before any elbows in the ductwork.
3. Insert the static pressure tips and energize the blower motor.
4. Measure the supply air static pressure. Record this positive number.
5. Measure the return air static pressure. Record this negative number.

   ⓘ **Note:** Return air static pressure must be taken after the air filter but before the indoor coil.

6. Treat the negative number as a positive, and add the two numbers together to determine the total external system static pressure.
7. See Unit data to determine the airflow and make the necessary adjustments to keep the CFM within the airflow limitations of the coil.

Verifying TXV installation

You can use the following checklist to verify TXV installation:

TXV checklist

□ Is the coil metering device installed correctly?

□ Is the correct TXV installed according to the *Technical Guide* or *Tabular Data Sheet* for the outdoor section?

□ Is the TXV temperature bulb positioned correctly?

□ Is the TXV temperature bulb insulated?

□ Is the TXV equalizer line connected?

Unit data

See the following tables for physical, electrical and airflow data for the JHE unit.

Combustible floor base accessory

See Table 10 and Figure 26 for information about floor base models.

Table 10: Floor base models

Floor base models	Used with	Dimensions		
		A	B	C
1FB1917	JHE18B5*B, JHE24B5*C, JHE30B5*D, JHE36B5*D	17.5	14	16
1FB1921	JHE36C5*D, JHE42C5*F, JHE48C5*G, JHE60C5*H	21	17.5	19.5
1FB1924	JHE48D5*G, JHE60D5*H, JHE60D5*J	24.5	21	23

Figure 26: Combustible floor base accessory

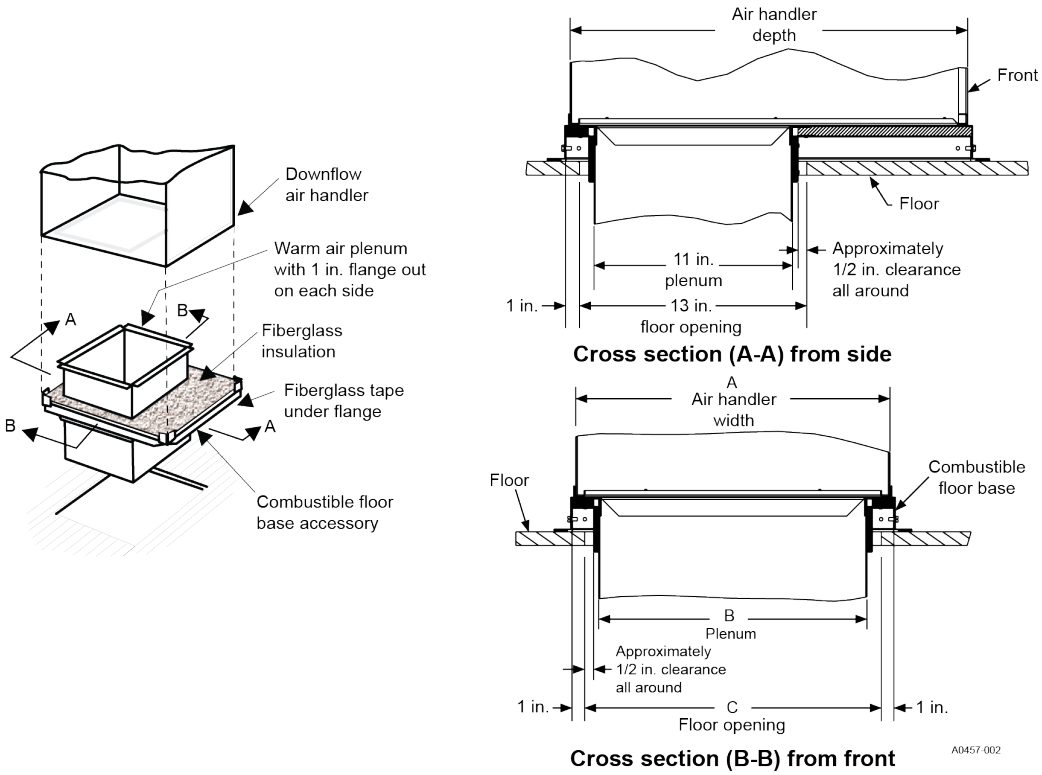

Physical and electrical data cooling only

See Table 11 for information on physical and electrical cooling data.

Table 11: Physical and electrical data cooling only

Models		JHE18B5*B	JHE24B5*C	JHE30B5*D	JHE36B5*D	JHE36C5*D	JHE42C5*F	JHE48C5*G	JHE48D5*G	JHE60C5*H	JHE60D5*H	JHE60D5*J
Blower diameter x width (in.)		11 × 8	11 × 8	11 × 8	11 × 8	11 × 10	11 × 10	11 x 10	11 x 11	11 x 10	11 x 11	11 x 11
Motor	hp	1/3	1/3	1/2	1/2	1/2	1/2	3/4	3/4	3/4	3/4	3/4
	Nominal RPM	1050										
Voltage (V)		208/230										
Full load amps at 230 V (A)		3.1	3.1	4.8	4.8	4.8	4.8	6.8	6.8	6.8	6.8	6.8
Shipping/operating weight (lb)		98/90	104/96	105/97	105/97	121/111	132/122	140/129	152/140	153/141	158/146	162/150

Electrical data cooling only

See Table 12 for information on electrical cooling data.

Table 12: Electrical data cooling only

Models	Motor FLA [1]	Minimum circuit ampacity (A)	MOP [2]
JHE18B5*B/JHE24B5*C	3.1	3.9	15
JHE30B5*D/JHE36B5*D/JHE36C5*D/JHE42C5*F	4.8	6.0	15
JHE48C5*G/JHE48D5*G/JHE60C5*H/JHE60D5*H/JHE60D5*J	6.8	8.5	15

1 Full load amps
2 MOP = Maximum Overcurrent Protection device; must be HACR type circuit breaker or time delay fuse. Refer to the latest edition of the National Electric Code or in Canada the Canadian electrical Code and local codes to determine correct wire sizing.

Electrical heat with heat pump: minimum fan speed

Table 13: Electrical heat with heat pump: minimum fan speed

Heater kit models [1, 2]	Nom. kW at 240 V	Air handler models										
		JHE18B5*B	JHE24B5*C	JHE30B5*D	JHE36B5*D	JHE36C5*D	JHE42C5*F	JHE48C5*G	JHE48D5*G	JHE60C5*H	JHE60D5*H	JHE60D5*J
8HK(0,1)6500206	2.4	5	6	6	6	6	6	5	6	5	5	5
8HK(0,1)6500506	4.8	7	6	6	6	6	6	5	6	5	5	5
8HK(0,1)6500806	7.7	8	7	6	8	8	8	6	7	6	6	5
8HK(0,1)6501006 8HK06501025	9.6	8	7	6	8	8	8	6	7	8	6	5
8HK(1,2)6501506 8HK06501525	14.4	-	7	7	8	8	8	6	7	8	8	7
8HK(1,2)6502006 8HK16502025	19.2	-	-	7	8	9	9	8	7	8	8	7
8HK(1,2)6502506 8HK16502525	24	-	-	-	-	-	-	-	-	-	8	7

1 (0,1) - 0 = no service disconnect OR 1 = with service disconnect.
2 (1,2) - 1 = with service disconnect, no breaker jumper bar OR 2 = with service disconnect and breaker jumper bar.

Application factors rated CFM versus actual CFM

See Table 14 for information on electrical cooling data.

Table 14: Application factors rated CFM versus actual CFM

% of rated airflow (CFM)	80	90	100	110	120
Capacity factor	0.96	0.98	1.00	1.02	1.03

kW and MBH conversions for total power input requirement

See Table 15 for information on electrical cooling data.

Table 15: kW and MBH conversions for total power input requirement

Distribution power (V)	Nominal voltage (V)	Conversion factor
208	240	0.75
220	240	0.84
230	240	0.92

ⓘ **Note:** For a power distribution voltage that is different from the provided nominal voltage, multiply the kW and MBH data from Table 16 by the conversion factor in the following table:

Electric heat performance data for 1 phase and 3 phase

See Table 16 for information on electrical cooling data.

Table 16: Electric heat performance data: 208/230-1-60 and 208/230-3-60

Heater models [1, 2]		Nominal kW at 240 V	Total heat[3]				kW staging			
			kW		MBH		W1 only		W1 and W2	
			208 V	230 V	208 V	230 V	208 V	230 V	208 V	230 V
Single phase	8HK(0,1)6500206	2.4	1.8	2.2	6.2	7.5	1.8	2.2	1.8	2.2
	8HK(0,1)6500506	4.8	3.6	4.4	12.3	15	3.6	4.4	3.6	4.4
	8HK(0,1)6500806	7.7	5.8	7.1	19.7	24.1	5.8	7.1	5.8	7.1
	8HK(0,1)6501006	9.6	7.2	8.8	24.6	30.1	7.2	8.8	7.2	8.8
	8HK(1,2)6501506	14.4	10.8	13.2	36.9	45.1	3.6	4.4	10.8	13.2
	8HK(1,2)6502006	19.2	14.4	17.6	49.2	60.2	7.2	8.8	14.4	17.6
	8HK(1,2)6502506	24	18	22	61.5	75.2	7.2	8.8	18	22
Three phase	8HK06501025	9.6	7.2	8.8	24.6	30.1	7.2	8.8	7.2	8.8
	8HK06501525	14.4	10.8	13.2	36.9	45.1	10.8	13.2	10.8	13.2
	8HK16502025	19.2	14.4	17.6	49.2	60.2	7.2	8.8	14.4	17.6
	8HK16502525	24	18	22	61.5	75.2	9	11	18	22

1 (0,1) - 0 = no service disconnect or 1 = with service disconnect.
2 (1,2) - 1 = with service disconnect, no breaker jumper bar or 2 = with service disconnect and breaker jumper bar.
3 For different power distributions, see Table 15.

Electrical data for single source power supply: 1 phase

See Table 17 for information about the electrical data for a one phase single source power supply.

Table 17: Electrical data for single source power supply: 208/230-1-60

Air handler models	Heater models [1, 2]	Heater amps (A) at 240 V	Field wiring			
			Minimum circuit ampacity (A)		MOP [3]	
			208 V	230 V	208 V	230 V
JHE18B5*B	8HK(0,1)6500206	10	14.7	15.8	15	20
	8HK(0,1)6500506	20	25.5	27.8	30	30
	8HK(0,1)6500806	32.1	38.7	42.5	40	45
	8HK(0,1)6501006	40	47.1	51.7	50	60
JHE24B5*C	8HK(0,1)6500206	10	14.7	15.8	15	20
	8HK(0,1)6500506	20	25.5	27.8	30	30
	8HK(0,1)6500806	32.1	38.7	42.5	40	45
	8HK(0,1)6501006	40	47.1	51.7	50	60
	8HK(1,2)6501506	60	68.8	75.6	70	80
JHE30B5*D	8HK(0,1)6500206	10	16.8	18.0	20	20
	8HK(0,1)6500506	20	27.6	29.9	30	30
	8HK(0,1)6500806	32.1	40.9	44.6	45	45
	8HK(0,1)6501006	40	49.3	53.8	50	60
	8HK(1,2)6501506	60	70.9	77.7	80	80
	8HK(1,2)6502006	80	92.5	101.7	100	110

Table 17: Electrical data for single source power supply: 208/230-1-60

Air handler models	Heater models [1, 2]	Heater amps (A) at 240 V	Field wiring			
			Minimum circuit ampacity (A)		MOP [3]	
			208 V	230 V	208 V	230 V
JHE36B5*D	8HK(0,1)6500206	10	16.8	18	20	20
	8HK(0,1)6500506	20	27.6	29.9	30	30
	8HK(0,1)6500806	32.1	40.9	44.6	45	45
	8HK(0,1)6501006	40	49.3	53.8	50	60
	8HK(1,2)6501506	60	70.9	77.7	80	80
	8HK(1,2)6502006	80	92.5	101.7	100	110
JHE36C5*D	8HK(0,1)6500206	10	16.8	18	20	20
	8HK(0,1)6500506	20	27.6	29.9	30	30
	8HK(0,1)6500806	32.1	40.9	44.6	45	45
	8HK(0,1)6501006	40	49.3	53.8	50	60
	8HK(1,2)6501506	60	70.9	77.7	80	80
	8HK(1,2)6502006	80	92.5	101.7	100	110
JHE42C5*F	8HK(0,1)6500206	10	16.8	18	20	20
	8HK(0,1)6500506	20	27.6	29.9	30	30
	8HK(0,1)6500806	32.1	40.9	44.6	45	45
	8HK(0,1)6501006	40	49.3	53.8	50	60
	8HK(1,2)6501506	60	70.9	77.7	80	80
	8HK(1,2)6502006	80	92.5	101.7	100	110
JHE48C5*G	8HK(0,1)6500206	10	19.3	20.5	20	25
	8HK(0,1)6500506	20	30.1	32.4	35	35
	8HK(0,1)6500806	32.1	43.4	47.1	45	50
	8HK(0,1)6501006	40	51.8	56.3	60	60
	8HK(1,2)6501506	60	73.4	80.2	80	90
	8HK(1,2)6502006	80	95	104.2	100	110
JHE48D5*G	8HK(0,1)6500206	10	19.3	20.5	20	25
	8HK(0,1)6500506	20	30.1	32.4	35	35
	8HK(0,1)6500806	32.1	43.4	47.1	45	50
	8HK(0,1)6501006	40	51.8	56.3	60	60
	8HK(1,2)6501506	60	73.4	80.2	80	90
	8HK(1,2)6502006	80	95	104.2	100	110
JHE60C5*H	8HK(0,1)6500206	10	19.3	20.5	20	25
	8HK(0,1)6500506	20	30.1	32.4	35	35
	8HK(0,1)6500806	32.1	43.4	47.1	45	50
	8HK(0,1)6501006	40	51.8	56.3	60	60
	8HK(1,2)6501506	60	73.4	80.2	80	90
	8HK(1,2)6502006	80	95	104.2	100	110
JHE60D5*H	8HK(0,1)6500206	10	19.3	20.5	20	25
	8HK(0,1)6500506	20	30.1	32.4	35	35
	8HK(0,1)6500806	32.1	43.4	47.1	45	50
	8HK(0,1)6501006	40	51.8	56.3	60	60
	8HK(1,2)6501506	60	73.4	80.2	80	90
	8HK(1,2)6502006	80	95	104.2	100	110
	8HK(1,2)6502506	100	116.7	128.1	125	150
JHE60D5*J	8HK(0,1)6500206	10	19.3	20.5	20	25
	8HK(0,1)6500506	20	30.1	32.4	35	35
	8HK(0,1)6500806	32.1	43.4	47.1	45	50
	8HK(0,1)6501006	40	51.8	56.3	60	60
	8HK(1,2)6501506	60	73.4	80.2	80	90
	8HK(1,2)6502006	80	95	104.2	100	110
	8HK(1,2)6502506	100	116.7	128.1	125	150

1 0,1) - 0 = no service disconnect OR 1 = with service disconnect.
2 (1,2) - 1 = with service disconnect, no breaker jumper bar OR 2 = with service disconnect & breaker jumper bar.
3 MOP = Maximum Overcurrent Protection device; must be HACR type circuit breaker or time delay fuse. Refer to the latest edition of the National Electric Code or in Canada the Canadian electrical Code and local codes to determine correct wire sizing.

Electrical data for multi-source power supply: 1 phase

See Table 18 for information about electrical data for a one phase multi-source power supply.

Table 18: Electrical data for multi-source power supply: 208/230-1-60

Air handlers models	Heater models [1]	Heater amps (A) at 240 V	Minimum circuit ampacity (A)						MOP[2]					
			208 V			230 V			208 V			230 V		
			Circuit						Circuit					
			First	Second	Third	First	Second	Third	First	Second	Third	First	Second	Third
JHE24B5*C	8HK16501506	60	25.3	43.5		27.5	48.1		30	45		30	50	
JHE30B5*D	8HK16501506	60	27.4	43.5		29.7	48.1		30	45		30	50	
	8HK16502006	80	49.3	43.3		53.8	47.8		50	45		60	50	
JHE36B5*D	8HK16501506	60	27.4	43.5		29.7	48.1		30	45		30	50	
	8HK16502006	80	49.3	43.3		53.8	47.8		50	45		60	50	
JHE36C5*D	8HK16501506	60	27.4	43.5		29.7	48.1		30	45		30	50	
	8HK16502006	80	49.3	43.3		53.8	47.8		50	45		60	50	
JHE42C5*F	8HK16501506	60	27.4	43.5		29.7	48.1		30	45		30	50	
	8HK16502006	80	49.3	43.3		53.8	47.8		50	45		60	50	
JHE48C5*G	8HK16501506	60	29.9	43.5		32.2	48.1		30	45		35	50	
	8HK16502006	80	51.8	43.3		56.3	47.8		60	45		60	50	
JHE48D5*G	8HK16501506	60	29.9	43.5		32.2	48.1		30	45		35	50	
	8HK16502006	80	51.8	43.3		56.3	47.8		60	45		60	50	
JHE60C5*H	8HK16501506	60	29.9	43.5		32.2	48.1		30	45		35	50	
	8HK16502006	80	51.8	43.3		56.3	47.8		60	45		60	50	
JHE60D5*H	8HK16501506	60	29.9	43.5		32.2	48.1		30	45		35	50	
	8HK16502006	80	51.8	43.3		56.3	47.8		60	45		60	50	
	8HK16502506	100	51.8	43.3	21.6	56.3	47.8	23.9	60	45	25	60	50	25
JHE60D5*J	8HK16501506	60	29.9	43.5		32.2	48.1		30	45		35	50	
	8HK16502006	80	51.8	43.3		56.3	47.8		60	45		60	50	
	8HK16502506	100	51.8	43.3	21.6	56.3	47.8	23.9	60	45	25	60	50	25

1 8HK1 = with service disconnect, no breaker jumper bar.
2 MOP = Maximum Overcurrent Protection device; must be HACR type circuit breaker or time delay fuse. Refer to the latest edition of the National Electric Code or in Canada the Canadian electrical Code and local codes to determine correct wire sizing.

Electrical data for single source power supply: 3 phase

See Table 19 for information about electrical data for a three phase single source power supply.

Table 19: Electrical data for single source power supply: 208/230-3-60

Air handler models	Heater models[1]	Heater amps (A) at 240 V	Field wiring			
			Minimum circuit ampacity (A)		MOP [2]	
			208 V	230 V	208 V	230 V
JHE18B5*B	8HK06501025	23.1	28.9	31.5	30.0	35.0
JHE24B5*C	8HK06501025	23.1	28.9	31.5	30.0	35.0
	8HK06501525	34.6	41.3	45.3	45.0	50.0
JHE30B5*D	8HK06501025	23.1	31.0	33.6	35.0	35.0
	8HK06501525	34.6	43.5	47.4	45.0	50.0
	8HK16502025[2]	46.2	56.0	61.2	60.0	70.0
JHE36B5*D	8HK06501025	23.1	31.0	33.6	35.0	35.0
	8HK06501525	34.6	43.5	47.4	45.0	50.0
	8HK16502025[2]	46.2	56.0	61.2	60.0	70.0
JHE36C5*D	8HK06501025	23.1	31.0	33.6	35.0	35.0
	8HK06501525	34.6	43.5	47.4	45.0	50.0
	8HK16502025[2]	46.2	56.0	61.2	60.0	70.0
JHE42C5*F	8HK06501025	23.1	31.0	33.6	35.0	35.0
	8HK06501525	34.6	43.5	47.4	45.0	50.0
	8HK16502025[2]	46.2	56.0	61.2	60.0	70.0
JHE48C5*G	8HK06501025	23.1	33.5	36.1	35.0	40.0
	8HK06501525	34.6	46.0	49.9	50.0	50.0
	8HK16502025[2]	46.2	58.5	63.7	60.0	70.0
JHE48D5*G	8HK06501025	23.1	33.5	36.1	35.0	40.0
	8HK06501525	34.6	46.0	49.9	50.0	50.0
	8HK16502025[2]	46.2	58.5	63.7	60.0	70.0

Table 19: Electrical data for single source power supply: 208/230-3-60

Air handler models	Heater models[1]	Heater amps (A) at 240 V	Field wiring			
			Minimum circuit ampacity (A)		MOP [2]	
			208 V	230 V	208 V	230 V
JHE60C5*H	8HK06501025	23.1	33.5	36.1	35.0	40.0
	8HK06501525	34.6	46.0	49.9	50.0	50.0
	8HK16502025[2]	46.2	58.5	63.7	60.0	70.0
JHE60D5*H	8HK06501025	23.1	33.5	36.1	35.0	40.0
	8HK06501525	34.6	46.0	49.9	50.0	50.0
	8HK16502025[2]	46.2	58.5	63.7	60.0	70.0
	8HK16502525[2]	57.7	71.0	77.5	80.0	80.0
JHE60D5*J	8HK06501025	23.1	33.5	36.1	35.0	40.0
	8HK06501525	34.6	46.0	49.9	50.0	50.0
	8HK16502025[2]	46.2	58.5	63.7	60.0	70.0
	8HK16502525[2]	57.7	71.0	77.5	80.0	80.0

1 0 = no service disconnect OR 1 = with service disconnect. The 20kW and 25kW heater models (8HK16502025 and 8HK16502525) come with circuit breakers standard. Single source power MCA and MOP requirements are given here only for reference if used with field installed single point power modification.

2 MOP = Maximum Overcurrent Protection device; must be HACR type circuit breaker or time delay fuse. The 1st circuit includes blower motor amps. Refer to the latest edition of the National Electric Code or in Canada the Canadian electrical Code and local codes to determine correct wire sizing.

Electrical data for multi-source power supply: 3 phase

See Table 20 for information about electrical data for a three phase multi-source power supply.

Table 20: Electrical data for multi-source power supply: 208/230-3-60

Air handlers models	Heater models [1]	Heater amps (A) at 240V	Minimum circuit ampacity (A)				MOP [2]			
			208V		230V		208V		230V	
			Circuit				Circuit			
			First	Second	First	Second	First	Second	First	Second
JHE30B5*D	8HK16502025	46.2	31.0	25.0	33.6	27.6	35.0	25.0	35.0	30.0
JHE36B5*D	8HK16502025	46.2	31.0	25.0	33.6	27.6	35.0	25.0	35.0	30.0
JHE36C5*D	8HK16502025	46.2	31.0	25.0	33.6	27.6	35.0	25.0	35.0	30.0
JHE42C5*F	8HK16502025	46.2	31.0	25.0	33.6	27.6	35.0	25.0	35.0	30.0
JHE48C5*G	8HK16502025	46.2	33.5	25.0	36.1	27.6	35.0	25.0	40.0	30.0
JHE48D5*G	8HK16502025	46.2	33.5	25.0	36.1	27.6	35.0	25.0	40.0	30.0
JHE60C5*H	8HK16502025	46.2	33.5	25.0	36.1	27.6	35.0	25.0	40.0	30.0
JHE60D5*H	8HK16502025	46.2	33.5	25.0	36.1	27.6	35.0	25.0	40.0	30.0
	8HK16502525	57.7	39.7	31.2	43.0	34.5	40.0	35.0	45.0	35.0
JHE60D5*J	8HK16502025	46.2	33.5	25.0	36.1	27.6	35.0	25.0	40.0	30.0
	8HK16502525	57.7	39.7	31.2	43.0	34.5	40.0	35.0	45.0	35.0

1 The 20kW and 25kW heater models (8HK16502025 and 8HK16502525) come with circuit breakers standard.

2 MOP = Maximum Overcurrent Protection device; must be HACR type circuit breaker or time delay fuse. The 1st circuit includes blower motor amps. Refer to the latest edition of the National Electric Code or in Canada the Canadian electrical Code and local codes to determine correct wire sizing.

Airflow data

See Table 21 for information about airflow data.

Table 21: Airflow data (CFM)

Models	Blower		External static pressure (in. wc.)									
	Motor Speed		0.1	0.2	0.3	0.4	0.5	0.6	0.7	0.8	0.9	1
JHE18B5*B	9	CFM	1000	975	925	875	850	800	775	725	675	650
		WATTS	145	152	159	166	173	180	188	195	202	209
	8	CFM	925	875	825	775	750	700	650	600	550	525
		WATTS	114	120	127	133	140	146	153	159	166	172
	7	CFM	825	800	750	700	650	600	550	500	450	425
		WATTS	93	99	105	111	117	123	129	135	141	147
	6	CFM	750	700	650	600	550	475	425	375	325	275
		WATTS	72	77	82	88	93	98	104	109	115	120
	5	CFM	700	650	600	550	500	450	375	325	275	225
		WATTS	64	69	74	79	84	89	94	99	104	109
	4	CFM	600	550	475	425	350	300	250	175	125	—
		WATTS	47	51	56	60	65	69	74	78	83	—
	3	CFM	575	500	450	375	325	250	200	125	—	—
		WATTS	42	46	50	55	59	63	67	71	—	—
	2	CFM	475	400	325	250	175	125	50	—	—	—
		WATTS	31	35	39	42	46	50	54	—	—	—
	1	CFM	400	325	225	150	—	—	—	—	—	—
		WATTS	23	27	31	34	—	—	—	—	—	—
JHE24B5*C	9	CFM	1175	1125	1100	1050	1025	1000	950	925	900	850
		WATTS	217	225	233	241	249	257	265	274	282	290
	8	CFM	1075	1025	1000	950	925	875	850	800	775	725
		WATTS	171	179	187	194	202	210	218	226	233	241
	7	CFM	975	925	900	850	800	775	725	675	650	600
		WATTS	133	140	147	154	161	168	175	182	189	197
	6	CFM	850	825	775	725	675	625	575	550	500	450
		WATTS	98	104	110	116	122	128	134	140	146	152
	5	CFM	775	725	700	650	600	550	500	450	400	350
		WATTS	81	86	92	97	103	109	114	120	125	131
	4	CFM	700	650	600	550	500	425	375	325	275	225
		WATTS	62	67	72	77	82	87	92	97	102	106
	3	CFM	650	600	525	475	425	375	300	250	200	—
		WATTS	53	57	62	66	71	75	80	85	89	—
	2	CFM	500	425	350	275	225	150	—	—	—	—
		WATTS	32	36	40	43	47	51	—	—	—	—
	1	CFM	400	325	250	175	—	—	—	—	—	—
		WATTS	24	28	31	35	—	—	—	—	—	—
JHE30B5*D	9	CFM	1475	1475	1450	1425	1425	1400	1375	1350	1325	1300
		WATTS	471	482	493	504	515	526	537	548	559	570
	8	CFM	1325	1300	1275	1250	1225	1200	1175	1150	1125	1100
		WATTS	320	330	340	350	360	370	380	390	400	410
	7	CFM	1125	1100	1075	1050	1025	1000	950	925	900	875
		WATTS	210	218	226	234	242	250	258	266	274	282
	6	CFM	975	950	900	875	825	800	750	725	675	650
		WATTS	140	148	155	162	170	177	185	192	200	207
	5	CFM	925	875	825	800	750	700	675	625	575	550
		WATTS	115	122	129	136	143	150	157	164	171	178
	4	CFM	800	750	700	650	600	550	525	475	425	375
		WATTS	82	88	94	100	107	113	119	125	131	137
	3	CFM	675	600	550	500	450	400	350	300	—	—
		WATTS	57	62	68	73	78	84	89	94	—	—
	2	CFM	525	450	400	325	250	175	—	—	—	—
		WATTS	36	40	45	49	53	58	—	—	—	—
	1	CFM	400	325	250	150	—	—	—	—	—	—
		WATTS	24	28	32	36	—	—	—	—	—	—

Table 21: Airflow data (CFM)

Models	Blower		External static pressure (in. wc.)									
	Motor Speed		0.1	0.2	0.3	0.4	0.5	0.6	0.7	0.8	0.9	1
JHE36B5*D	9	CFM	1500	1475	1450	1425	1400	1375	1375	1350	1325	1300
		WATTS	470	481	492	502	513	524	535	545	556	567
	8	CFM	1325	1300	1275	1250	1225	1200	1175	1150	1125	1100
		WATTS	323	333	343	353	363	373	383	393	403	413
	7	CFM	1050	1025	1000	950	925	900	850	825	800	750
		WATTS	175	182	190	198	205	213	221	228	236	244
	6	CFM	950	925	875	850	800	750	725	675	650	600
		WATTS	130	137	144	151	158	165	172	180	187	194
	5	CFM	800	750	700	650	600	550	525	475	425	375
		WATTS	87	93	99	105	111	117	124	130	136	142
	4	CFM	950	925	875	850	800	775	725	700	650	600
		WATTS	144	151	158	165	172	179	186	193	200	207
	3	CFM	725	675	625	575	525	475	425	375	325	275
		WATTS	68	73	79	84	90	95	101	107	112	118
	2	CFM	475	400	350	275	200	125	75	—	—	—
		WATTS	31	35	39	43	47	51	55	—	—	—
	1	CFM	400	325	250	175	100	—	—	—	—	—
		WATTS	23	27	31	35	39	—	—	—	—	—
JHE36C5*D	9	CFM	1525	1500	1475	1425	1400	1375	1350	1325	1300	1250
		WATTS	363	376	389	403	416	429	443	456	470	483
	8	CFM	1350	1300	1275	1225	1200	1150	1125	1100	1050	1025
		WATTS	250	261	271	282	292	303	313	324	335	345
	7	CFM	1175	1150	1100	1050	1025	975	950	900	850	825
		WATTS	181	190	199	208	217	226	235	243	252	261
	6	CFM	1075	1025	975	925	875	850	800	750	700	650
		WATTS	139	147	155	163	171	179	187	195	203	211
	5	CFM	925	875	825	775	725	675	625	575	525	450
		WATTS	99	106	112	119	126	133	140	147	154	160
	4	CFM	800	750	675	625	550	500	450	375	325	250
		WATTS	70	76	82	88	94	100	106	112	118	124
	3	CFM	725	650	600	525	475	400	325	275	—	—
		WATTS	57	62	68	74	79	85	91	96	—	—
	2	CFM	475	400	300	225	125	—	—	—	—	—
		WATTS	28	32	36	41	45	—	—	—	—	—
	1	CFM	400	300	200	75	—	—	—	—	—	—
		WATTS	22	26	29	33	—	—	—	—	—	—
JHE42C5*F	9	CFM	1525	1500	1450	1425	1375	1350	1325	1275	1250	1200
		WATTS	325	337	349	360	372	384	395	407	419	430
	8	CFM	1375	1325	1300	1250	1200	1175	1125	1075	1025	1000
		WATTS	238	249	259	269	279	290	300	310	321	331
	7	CFM	1225	1175	1125	1075	1025	975	925	875	825	775
		WATTS	171	180	190	199	208	217	226	235	244	253
	6	CFM	1050	1000	950	900	850	800	750	675	625	575
		WATTS	127	135	142	150	158	165	173	180	188	195
	5	CFM	925	850	800	750	700	650	575	525	475	425
		WATTS	95	102	108	115	121	128	134	141	148	154
	4	CFM	800	750	675	600	550	475	425	350	300	—
		WATTS	69	75	81	87	93	99	105	111	117	—
	3	CFM	750	650	575	500	425	350	275	200	100	—
		WATTS	53	58	64	69	74	79	85	90	95	—
	2	CFM	625	550	475	400	300	225	150	—	—	—
		WATTS	42	48	53	58	63	68	73	—	—	—
	1	CFM	450	350	250	150	50	—	—	—	—	—
		WATTS	25	29	34	38	42	—	—	—	—	—

Table 21: Airflow data (CFM)

Models	Blower		External static pressure (in. wc.)									
	Motor Speed		0.1	0.2	0.3	0.4	0.5	0.6	0.7	0.8	0.9	1
JHE48C5*G	9	CFM	1925	1900	1875	1850	1825	1800	1750	1725	1700	1675
		WATTS	626	638	650	662	674	686	698	710	722	734
	8	CFM	1750	1725	1700	1650	1625	1600	1575	1550	1525	1475
		WATTS	464	476	488	500	513	525	537	550	562	574
	7	CFM	1500	1475	1425	1400	1350	1325	1300	1250	1225	1175
		WATTS	299	309	320	330	341	351	361	372	382	393
	6	CFM	1400	1375	1325	1300	1250	1225	1175	1150	1100	1050
		WATTS	248	258	268	277	287	297	306	316	326	335
	5	CFM	1225	1175	1125	1075	1025	975	925	900	850	800
		WATTS	167	175	183	192	200	208	217	225	233	242
	4	CFM	975	900	850	800	750	700	625	575	525	475
		WATTS	97	104	110	117	123	130	137	143	150	156
	3	CFM	725	650	575	500	425	350	275	225	150	—
		WATTS	52	57	62	67	72	77	81	86	91	—
	2	CFM	625	550	475	400	325	225	150	—	—	—
		WATTS	42	46	51	56	60	65	70	—	—	—
	1	CFM	475	375	275	175	75	—	—	—	—	—
		WATTS	27	31	35	39	43	—	—	—	—	—
JHE48D5*G	9	CFM	2075	2050	2025	1975	1950	1925	1900	1850	1825	1800
		WATTS	567	582	597	612	627	642	658	673	688	703
	8	CFM	1875	1850	1800	1775	1750	1700	1675	1650	1600	1575
		WATTS	421	435	449	462	476	490	503	517	531	544
	7	CFM	1675	1625	1600	1550	1500	1475	1425	1375	1350	1300
		WATTS	297	309	321	333	346	358	370	383	395	407
	6	CFM	1300	1250	1200	1150	1075	1025	975	925	850	800
		WATTS	153	163	172	182	192	201	211	221	230	240
	5	CFM	1150	1100	1025	975	900	850	775	725	675	600
		WATTS	115	124	132	141	150	158	167	175	184	192
	4	CFM	950	875	825	750	675	600	525	475	400	325
		WATTS	78	85	92	99	105	112	119	126	133	140
	3	CFM	850	775	700	625	550	475	400	325	250	—
		WATTS	63	69	75	82	88	94	101	107	113	—
	2	CFM	725	650	550	450	375	275	175	100	—	—
		WATTS	46	51	56	62	67	72	78	83	—	—
	1	CFM	650	550	450	350	250	150	50	—	—	—
		WATTS	37	43	49	53	58	61	64	—	—	—
JHE60C5*H	9	CFM	1950	1925	1875	1850	1825	1800	1750	1725	1700	1675
		WATTS	625	643	660	675	689	702	713	723	731	738
	8	CFM	1750	1725	1675	1650	1625	1600	1575	1525	1500	1475
		WATTS	465	478	491	504	517	530	543	556	569	582
	7	CFM	1575	1525	1500	1475	1425	1400	1350	1325	1300	1250
		WATTS	339	350	362	373	385	396	408	419	431	442
	6	CFM	1375	1325	1275	1250	1200	1150	1125	1075	1050	1000
		WATTS	231	241	251	261	271	281	291	301	311	321
	5	CFM	1200	1150	1100	1050	1000	950	900	850	800	750
		WATTS	158	167	175	184	193	202	210	219	228	236
	4	CFM	925	875	825	775	700	650	600	550	475	425
		WATTS	93	99	106	112	119	126	132	139	145	152
	3	CFM	850	775	725	650	600	525	475	400	350	—
		WATTS	73	79	85	91	97	104	110	116	122	—
	2	CFM	725	650	575	500	425	350	275	200	—	—
		WATTS	52	58	63	68	73	79	84	89	—	—
	1	CFM	625	550	475	400	325	225	150	—	—	—
		WATTS	42	47	52	57	62	67	72	—	—	—

Table 21: Airflow data (CFM)

Models	Blower		External static pressure (in. wc.)									
	Motor Speed		0.1	0.2	0.3	0.4	0.5	0.6	0.7	0.8	0.9	1
JHE60D5*H	9	CFM	1975	1950	1900	1875	1850	1800	1775	1750	1725	1675
		WATTS	498	512	525	538	551	565	578	591	604	617
	8	CFM	1825	1800	1750	1725	1675	1650	1600	1575	1525	1500
		WATTS	393	406	418	431	443	456	468	481	493	506
	7	CFM	1600	1550	1500	1475	1425	1375	1325	1275	1250	1200
		WATTS	265	276	288	299	310	322	333	344	356	367
	6	CFM	1475	1425	1375	1325	1275	1225	1175	1125	1075	1025
		WATTS	212	222	233	243	254	264	275	285	296	306
	5	CFM	1275	1225	1150	1100	1050	975	925	875	800	750
		WATTS	145	155	164	173	183	192	201	211	220	229
	4	CFM	1000	950	875	800	750	675	600	550	475	400
		WATTS	86	94	101	109	117	124	132	140	147	155
	3	CFM	875	800	725	650	575	500	425	350	275	200
		WATTS	64	70	77	84	90	97	104	110	117	124
	2	CFM	725	650	550	475	375	300	225	—	—	—
		WATTS	45	51	57	63	69	75	81	—	—	—
	1	CFM	650	550	475	375	275	200	—	—	—	—
		WATTS	38	43	49	54	60	65	—	—	—	—
JHE60D5*J	9	CFM	2150	2125	2100	2075	2050	2025	1975	1925	1900	1850
		WATTS	698	710	722	734	746	758	769	781	793	805
	8	CFM	2000	1975	1925	1900	1875	1850	1800	1775	1750	1700
		WATTS	514	529	544	559	574	589	603	618	633	648
	7	CFM	1800	1775	1750	1700	1675	1625	1600	1550	1525	1500
		WATTS	390	404	417	431	445	458	472	486	499	513
	6	CFM	1575	1525	1475	1425	1375	1350	1300	1250	1200	1150
		WATTS	255	267	278	290	302	313	325	337	348	360
	5	CFM	1400	1325	1275	1225	1175	1125	1075	1025	975	925
		WATTS	185	196	206	217	227	238	248	259	269	279
	4	CFM	1250	1200	1125	1075	1025	950	900	850	775	725
		WATTS	145	154	163	172	180	189	198	206	215	224
	3	CFM	900	825	775	700	625	550	475	400	325	—
		WATTS	73	79	85	92	98	105	111	118	124	—
	2	CFM	700	625	550	450	375	275	200	—	—	—
		WATTS	46	51	57	62	68	73	78	—	—	—
	1	CFM	625	525	450	350	250	175	—	—	—	—
		WATTS	39	43	48	53	57	62	—	—	—	—

Note:

- Air handler units have been tested to UL 60335—2—40 / CSA 22.2 No. 236 standards up to 0.6 in. W.C. external static pressure.
- Dry coil conditions only, tested without filters.
- For optimal performance, external static pressures of 0.2 in. W.C to 0.5 in. W.C are recommended. Heating applications tested at 0.5 in. W.C. external static pressure.
- At some settings, low cool and/or low heat airflow may be lower than what is required to operate an airflow switch on certain models of electronic air cleaners. Consult the instructions for the electronic air cleaner for further details.
- The airflow data shown is from testing performed at 230 V. JHE units use a standard ECM constant torque motor and there is minimal variation of airflow at other distribution voltage values. The above data can be used for airflow at other distribution voltages.

Maintenance

Inspect filters at least once per month, and clean or replace them when they become dirty. The frequency of cleaning depends upon the hours of operation and the local atmospheric conditions. Clean filters keep unit efficiency high.

Coil cleaning

⚠ CAUTION

Ensure adequate precautions are taken to protect electrical components from liquid.

If cleaning the coil is necessary, clean with water only.

As an alternative to water, Evap-Green by Nu-Calgon is the only pH neutral coil cleaner approved for use when it is correctly diluted. Ensure to thoroughly rinse the cleaned coils after using Evap-Green.

Lubrication

The bearings of the blower motor are permanently lubricated.

Condensate drains

During the cooling season, check the condensate drain lines to be sure that condensate is flowing from the primary drain but not from the secondary drain.

If condensate ever flows from the secondary drain, shut off the unit immediately and clean the condensate pan and drains to ensure a free flowing primary drain.

Third-party trademarks

Third-Party Trademarks Notice: For information about third-party trademarks, refer to the relevant company websites.

Wiring diagram

Figure 27: Wiring diagram - standard single piece multi-position ECM

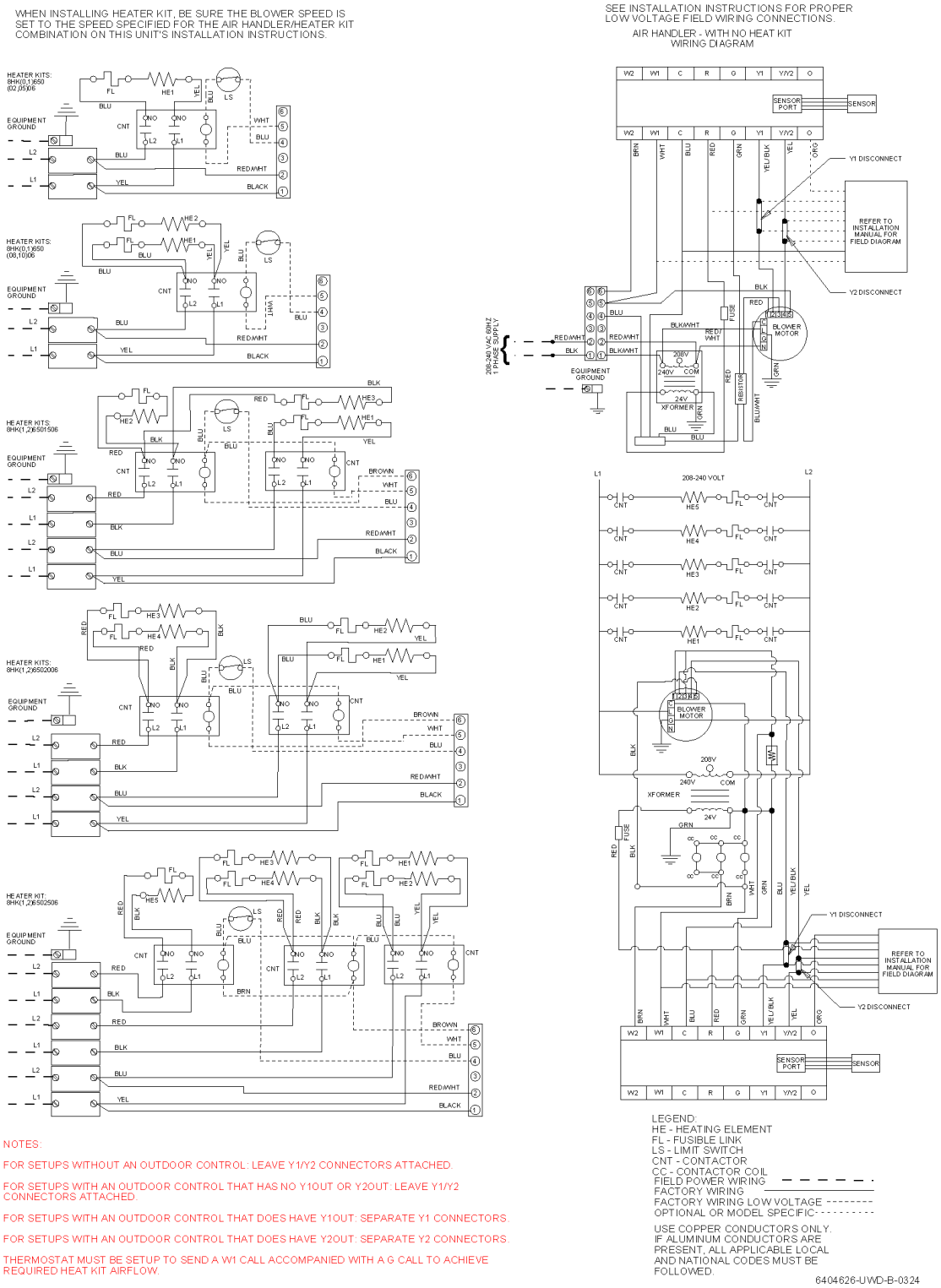

Start-up sheet

Start-up Sheet

Residential Air Handler with Electric Heat

Correct start-up is critical to customer comfort and equipment longevity

Start-up date ____ Company name ____ Start-up technician ____

Owner information

Name ____ Address ____ Daytime phone ____

City ____ State or province ____ Zip or postal code ____

Equipment data

Unit model number ____ Unit serial number ____

General information (check all that apply)

- ◯ New construction
- ◯ Retrofit
- ◯ Upflow
- ◯ Downflow
- ◯ Horizontal Left
- ◯ Horizontal Right

Unit location and connections (check all that apply)

☐ Unit is level Duct connections are complete: ☐ Supply ☐ Return

☐ Condensate drain is connected correctly (refer to installation manual) ☐ Condensate trap is primed with water

Filters

☐ Filters installed Number of filters ____ Filter size ____

Electrical connections and inspection (complete all that apply)

◯ 208 VAC ◯ 230 VAC ◯ 460 VAC

☐ Wires and electrical connections inspected ☐ Transformer wired correctly for primary supply voltage ☐ Ground connected

Line voltage measured (VAC) ____ Low voltage value between R and C at control board (VAC) ____

☐ Thermostat wiring is complete ☐ Thermostat cycle rate or heat anticipator adjusted to Installation Manual specifications

Airflow setup

Blower type and set-up	Variable speed ECM (circle **0** or **1**)	Heat	0 / 1	0 / 1						
		Low cool	0 / 1	0 / 1	0 / 1					
		High cool	0 / 1	0 / 1	0 / 1					
		Delay	0 / 1	0 / 1						
		Stage 1 kW	0 / 1	0 / 1						
		Heat kit selection	0 / 1	0 / 1	0 / 1	0 / 1				
	Standard ECM	Compressor high	◯ 1	◯ 2	◯ 3	◯ 4	◯ 5	◯ 6	◯ 7	◯ 8	◯ 9
		Compressor low	◯ 1	◯ 2	◯ 3	◯ 4	◯ 5	◯ 6	◯ 7	◯ 8	◯ 9
		Continuous fan	◯ 1	◯ 2	◯ 3	◯ 4	◯ 5	◯ 6	◯ 7	◯ 8	◯ 9
		Electric heat	◯ 1	◯ 2	◯ 3	◯ 4	◯ 5	◯ 6	◯ 7	◯ 8	◯ 9

Supply static (in. W.C.) ____ Supply air dry bulb temperature ____ Outside air dry bulb temperature ____

Return static (in. W.C.) ____ Return air dry bulb temperature ____ Return air wet bulb temperature ____

Total external static pressure ____ Temperature drop ____ Supply air wet bulb temperature ____

Other switches (check all that apply)

HUMIDISTAT ◯ YES ◯ NO AC/HP ◯ AC ◯ HP CONT FAN ◯ L ◯ M ◯ H

Continued on next page

Electric heat (complete all that apply)

Electric heat kit:	Model number		Serial number		Rated kW	

Number of elements						
	Measured amperage (A)	Heater 1		Heater 2		Heater 3	
		Heater 4		Heater 5		Heater 6	
	Measured voltage (V)	Heater 1		Heater 2		Heater 3	
		Heater 4		Heater 5		Heater 6	

Heating return air dry bulb temperature		Heating supply air dry bulb temperature		Air temperature rise	

Job site clean-up

- ☐ Job site has been cleaned, and indoor and outdoor debris removed from job site.
- ☐ Tools have been removed from unit.
- ☐ All panels have been installed.

Unit operation and cycle test (complete all that apply)

- ☐ Operate the unit through continuous fan cycles from the thermostat, noting and correcting any problems.
- ☐ Operate the unit through cooling cycles from the thermostat, noting and correcting any problems.
- ☐ Operate the unit through mechanical heating cycles from the thermostat, noting and correcting any problems.
- ☐ Operate the unit through emergency heating cycles from the thermostat, noting and correcting any problems.

Owner education

- ☐ Provide the owner with the owner's manual.
- ☐ Explain operation of system to the owner.
- ☐ Explain thermostat use and programming (if applicable) to the owner.
- ☐ Explain the importance of regular filter replacement and equipment maintenance.

Comments and additional job details

Subject to change without notice. Published in U.S.A. Copyright © 2024 by Johnson Controls. All rights reserved.