Installation instructions

C1 INDOOR Sauna
38440-0FNC-SPS
38440-1FNC-SPS
39963-0FNC-CGS
39963-1FNC-CGS

KOHLER®

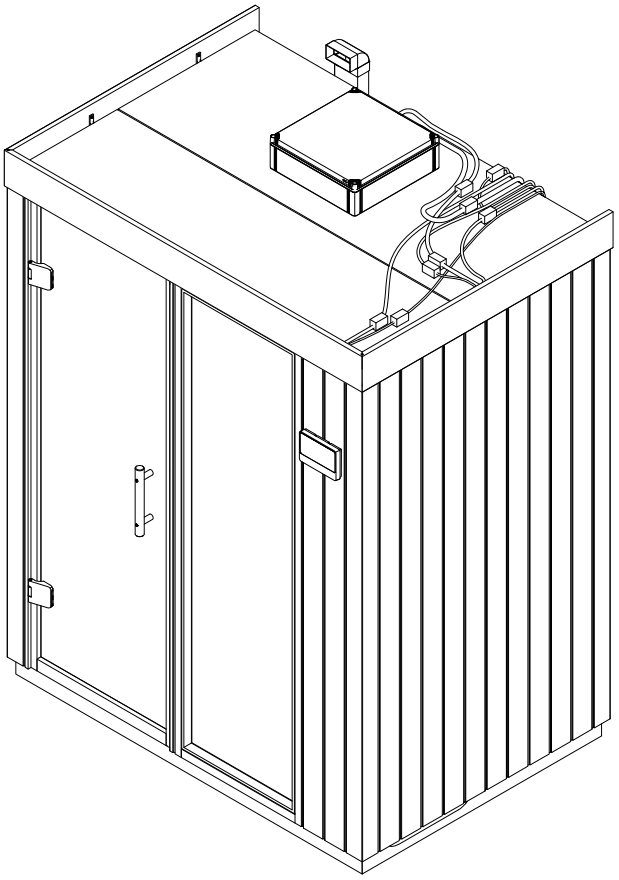

38440-0FNC-SPS
38440-1FNC-SPS

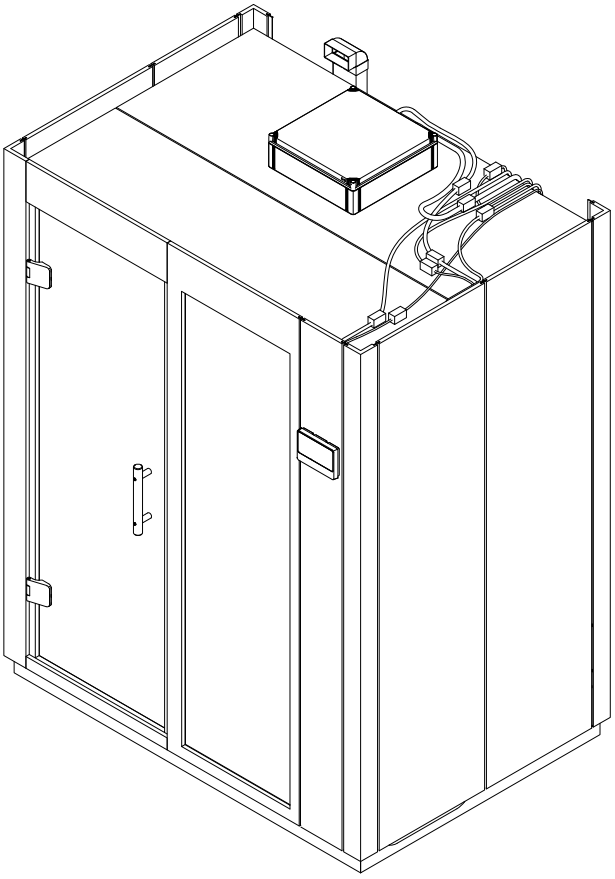

39963-0FNC-CGS
39963-1FNC-CGS

KOHLER®

TABLE OF CONTENTS Page

1.	Important safety precautions	6
2.	Symbols	8
2.1.	Information symbols	8
2.2.	Safety/command symbols	8
3.	Installation tools/parts	9
4.	Installation symbols	11
5.	NOTICES FOR INSTALLATION	12
5.1.	Pre-requirements for installation	12
5.2.	Target group	12
5.3.	Elements of the installation instructions	12
5.4.	In addition to these installation instructions, please observe	12
5.5.	Diagrams and images	13
5.6.	Floor	13
5.7.	Condensation	13
5.8.	Electrical connection	14
5.9.	Sauna Heater	14
5.10.	Hazard warnings	14
6.	Regulations, installation in room niches, extension to the existing exhaust air system	15
7.	PREPARING INSTALLATION PARTS	16
8.	INSTALLING THE SAUNA	17
8.1.	Bottom frame – overview	17
8.2.	Bottom frame – installation	18
8.3.	Bottom frame – alignment	20
8.4.	Option – Floor panels - laying out	21
8.5.	Cabin Body – assembly	23
8.6.	Cabin Body – taping sealing strip onto wall sections	24
8.7.	Cabin Body – spring-loaded toggle latch	25
8.8.	Cabin Body – assembling the cabin wall sections	26
8.9.	Cabin Body – putting up the wall sections	27
8.10.	Cabin Body – positioning the first ceiling element	33
8.11.	Cabin Body – putting up the wall sections, continued	34
8.12.	Cabin Body – putting up the wall sections, final	36
8.13.	Cabin Body – positioning the second ceiling element	37

KOHLER®

TABLE OF CONTENTS Page

8.14.	Cabin Body – laying the power pack on the cabin roof	38
8.15.	Cabin Body – plugging the connector pairs together	39
8.16.	Cabin Body – fitting the cover strips	40
8.17.	Sauna heater – installation	44
8.18.	Sauna heater – installing the rail	49
8.19.	Sauna heater – filling with stones	50
8.20.	Cabin Body – fitting the exterior panel	51
8.21.	Cabin Body – fitting the door handle	52
8.22.	Lounger setup – fitting the backrest	53
8.23.	Lounger setup – fitting support strips	54
8.24.	Lounger setup – fitting the lower large lounger	55
8.25.	Lounger setup – fitting the lounger panel to the lower large lounger	56
8.26.	Cabin body – overview of the roof panel	57
8.27.	Cabin body – fitting the roof panel	58
8.28.	Electrical connection	59
8.29.	Option – Cabin body – cabin roof – cable covering	60
8.30.	Instruments – Thermometers, sand timer	61
8.31.	Lounger setup – stool	62
8.32.	Connectors	63
8.33.	Cable list	64

KOHLER®

Thank you for choosing KOHLER

Do you need help? Please contact our Customer Service Center.

- USA/Canada: 1-800-4KOHLER (1-800-456-4537)
  Mexico: 001-800-456-4537
  Opening times: Monday to Friday from 8.00 a.m. to 5.00 p.m. (CT)
  Available languages: English, Spanish and translation services available.
- Spare parts: kohler.com/serviceparts
- Care and cleaning: kohler.com/clean
- Patents: kohlercompany.com/patents

Warranty

This product is covered by the KOHLER© Sauna Warranty, which can be found at kohler.com/warranty.
You can obtain a printed version of the warranty conditions from the Customer Service Center.

⚠ WARNING

This product may expose you to chemicals (e.g. nickel).
Of these, nickel is known to the state of California to cause cancer, birth defects or other reproductive harm.

- For more information, visit www.P65Warnings.ca.gov.

1. IMPORTANT SAFETY PRECAUTIONS

Read all instructions before use

Read the installation/operating instructions before installing and using the sauna.

The manufacturer assumes no liability in case of injury or damage due to improper installation or use of the sauna.

RETAIN THE INSTRUCTIONS. Always store the instructions in a safe and accessible place for future reference.

⚠ DANGER – To reduce the risk of an electric shock, disconnect the power supply before cleaning.

Electrical connection

- Connect the sauna heater using the connectors provided in accordance with the installation instructions and wiring diagram.
- Electrical wiring inside the cabin and the cabin walls have silicone insulation. The electrical wiring for the sauna heater in the cabin has a protective metal sleeve.
- The appointed and approved electrician must install an electrical outlet in the wall, in compliance with local regulations and standards, which is suitable for the electrical demands of this sauna.
- The electrical outlet must be protected by a residual-current circuit breaker $I_{\Delta N} \leq 0.03$ A with at least a 0.04"/3 mm contact gap.

Safety during use

- Regularly check the sauna heater for damage.
- Do not put a lock on the sauna door. This prevents people from being trapped in the sauna cabin in the event of a malfunction.
- The sauna is not intended for use by persons (including children) with reduced physical, sensory or mental abilities or by persons with a lack of experience or knowledge, unless they receive instructions in the use of the sauna or are supervised by a person responsible for their safety. Children must be supervised to ensure that they do not play in or with the sauna.
- The controller is not a toy.

Technical safety

- If the mains power cable or other electrical components of the controller/sauna heater are damaged, disconnect the power supply line by switching off the fuse element. Have the mains power cable or other electrical components replaced by service personnelor by authorized electricians. Installations and repairs that are not performed correctly may pose a considerable risk to the user.
- Disconnect the sauna heater from the mains before opening the sauna heater's terminal box.
- Only use original spare parts.
- Unapproved changes to the controller or sauna heater are not permitted.
- Only use one sauna heater – do not operate additional sauna heaters.
- Do not install the sauna heater in niches.
- Improper use of the sauna heater is prohibited.

⚠ WARNING – To reduce the danger of combustions, fires, electric shocks or injury to persons:

1. Close monitoring is required if this equipment is used by children or persons with disabilities.
2. Use this unit only for its intended purpose as described in these Operating Instructions. Do not use any additional parts that are not recommended by the manufacturer.
3. Never insert objects into an opening.
4. Do not use the equipment outdoors.
5. Do not operate the equipment where aerosol products are being used or where oxygen is being administered.

Risk of death and accidents for children!

Children are unable to recognize the dangers arising from playing with the packaging materials or from inadvertently operating the controller.

- Take the packaging materials to your local disposal facilities.
- Do not allow children to play with the packaging materials or the controller.

2. SYMBOLS

2.1. Information symbols

⚠ DANGER	Imminent danger ○ Death or serious injury
⚠ WARNING	Dangerous situation ○ Possible death or serious injury
⚠ CAUTION	Dangerous situation ○ Minor to moderate injuries
ATTENTION	Risk of damage to property ○ Damage to physical property
HAZARD WARNINGS	Specific safety-related instructions or procedures ○ Risk of injury, damage to property
NOTICE	Additional information ○ Notices for action sequences

2.2. Safety/command symbols

Risk of injuries caused by sharp objects (e.g. needles, blades).

Risk of injuries caused by sharp objects (e.g. needles, blades).

Protection must be worn to prevent foot injuries caused by falling objects.

Protection must be worn to prevent hand injuries caused by sharp or pointed objects.

3. INSTALLATION TOOLS/PARTS

NOTICE

Have the required installation tools/parts to hand prior to commencing the installation.
Installation material from the installation set may be left over.

Required installation tools			
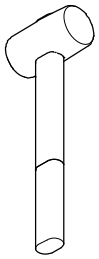 Rubber mallet	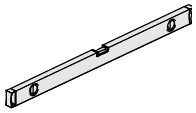 Spirit level	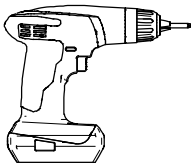 Cordless screwdriver	

General tools			
1x MO190195 ASSY AW20	1x 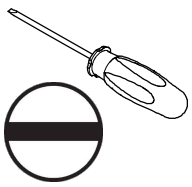 MO190386 Slot screwdriver	1x 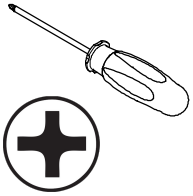 MO190387 Cross-head screwdriver	1x 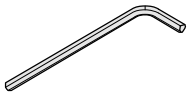 MO190736 Hex key – 3 mm
1x 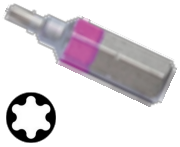 MO190194 ASSY AW10			

Bottom frame			
8x 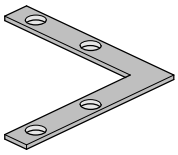 MP490005 75 x 75 x 12 x 1.5	4x 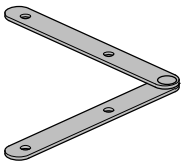 MP490006 100 x 100 x 12 x 1.5	50x MP440006 Assy 3.5 x 25/22	
5x 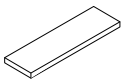 MO190476 24 x 1	5x 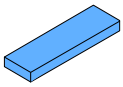 MO190475 24 x 2	5x 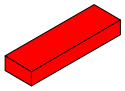 MO190474 24 x 3	5x 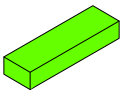 MO190477 24 x 5
Cabin body		Cover strip, floor strip	Roof panel
1x 31500532 Spring-loaded toggle latch (replacement)	7x 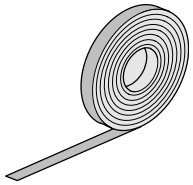 MO190032 1 roll 3.9 m	50x MP440210 Assy Plus 4.5 x 70/34 A2	4x 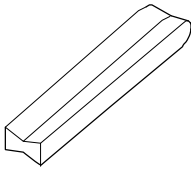 31500537 Hoffmann-Schwalbe W4x40
Loungers	Lounger panel	Ceiling/panel support strips	Sauna heater
16x MP440054 Assy Plus 4 x 50	6x MP440231 Assy-Plus 4.5 x 40/22 A2	40x MP440061 Assy 5 x 70/42	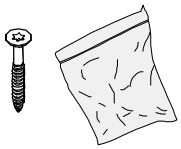 F0100030409 Blackened screw, 4x25

5

4. INSTALLATION SYMBOLS

D 1x = MP440006

1. Place wall section W2 in the groove on the bottom frame.
2. Push wall section W2 into the tongue for wall section W1.

1. (5) Stage of installation
2. (A, B, C, ...) Installation step, alphabetical order
3. (1x, 2x) Number of installation parts required for this installation step
4. Installation description
5. Quantity and item numbers of the installation parts for the installation step

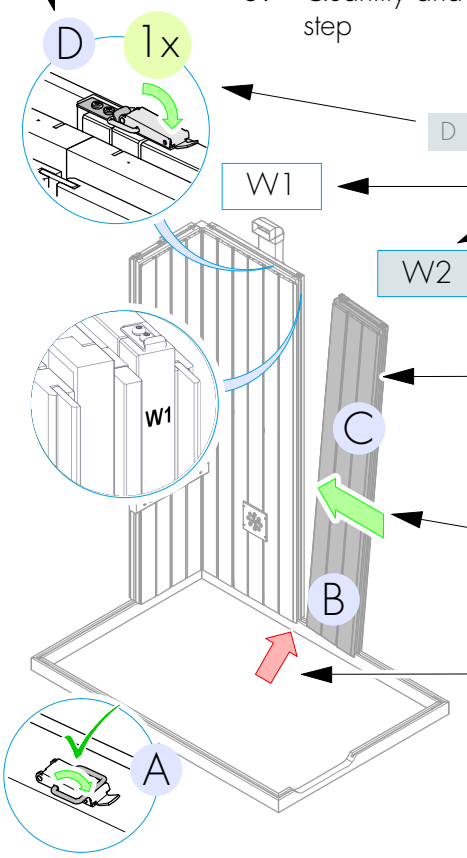

D 1x = MP440006

6. Labeling on the installation part
7. Gray highlighting, current installation part to be installed
8. Green arrow, direction of assembly or insertion position
9. Red arrow, notice for installation
10. Notices/safety precautions for installation

ATTENTION

Risk of damage to property
Wall sections may fall down.
Start installation of the first two wall sections at the corner. Hold the wall sections in place until they are joined together.

5. NOTICES FOR INSTALLATION

5.1. Pre-requirements for installation

NOTICE

Read the instructions thoroughly before you begin the installation work! Work in pairs to install the sauna cabin.

Required installation tools:
Spirit level, rubber hammer and cordless screwdriver.

5.2. Target group

The sauna cabin must be installed by persons with experience in construction, electrical engineering or similar technical fields. Successful installation requires practical skills, physical strength and familiarity with tools and safety precautions.

To ensure safe and efficient installation:

1. At least two people are required for the installation.
2. Installers should be able to understand technical instructions and handle components with care.

5.3. Elements of the installation instructions

List of installation parts, drawings, lounger plan, electrical wiring diagram.

5.4. In addition to these installation instructions, please observe

Warning signs and warning notices on the packaging and the sauna cabin.

Other elements of the installation instructions for the sauna cabin and the installed purchased parts.

Legal provisions on accident prevention, occupational safety and environmental protection.

No part of the installation instructions may be reproduced, distributed or used without authorization for competitive purposes or forwarded to others.

All rights are reserved by KOHLER Co., including in the event of patent applications. KOHLER Co. retains all rights of disposal, such as copying and transfer rights.

5.5. Diagrams and images

NOTICE

The degree of prefabrication of pre-assembled components, e.g. lamps, sensors, exhaust air ducts, etc. may differ from the images shown in these instructions. However, this has no influence on the accuracy of the situation described.

Because saunas are available in different sizes and types, there may be some installation material left over.

5.6. Floor

NOTICE

The ground must be level and horizontal.
Do not use carpets or other absorbent materials, as these can retain moisture and pose a hygiene and fire risk.
The floor should be easy to clean.
Recommended floor covering: Cement floor screed, brick, tiles, or hardwood.
The floor should be non-slip in order to prevent accidents, especially in wet conditions.
The floor must be able to support the total weight of the sauna cabin with sauna heater and people. You can find further information in the technical data sheets.
If the sauna is purchased with the "Floor Kit" option, you can install it on any flat indoor surface.

5.7. Condensation

NOTICE

Condensation can form on cold walls. Install thermal insulation with a vapor trap if your sauna is positioned in a room with cold walls. Also insulate any water pipes that are in the immediate vicinity of your sauna.
The ceiling height of the location must be at least 8 feet (2438 mm) to allow sufficient space for ventilation and maintenance of the power supply box.
The distance between the sauna wall and the room wall must be at least 2" (50 mm).
Ensure that the fresh air supply and the exhaust air duct are not blocked. Ensure sufficient air circulation. Ventilate regularly.

5.8. Electrical connection

The connection cables are gathered together on the roof of the cabin, ready to be plugged in.
Check that all plugs are connected after installation is complete.

5.9. Sauna Heater

Install and connect the sauna heater as described in these installation instructions.

5.10. Hazard warnings

⚠ DANGER

Risk of injury!
When unpacking, parts can fall off the pallet and cause injuries.

- Take care when transporting and unpacking the pallet. Secure the parts to prevent them falling down.

ATTENTION

Risk of damage!
Do not damage the electrical cables when setting up the electric wall element.

- Secure the electrical cables and do not trap them between the installation surfaces.

6. REGULATIONS, INSTALLATION IN ROOM NICHES, EXTENSION TO THE EXISTING EXHAUST AIR SYSTEM

Fire protection, building regulations, installation conditionsservice personnel.

- Ensure that all surrounding materials comply with fire safety standards and maintain the manufacturer's recommended clearances around the sauna heater and electrical components.
- Ensure that the installation complies with local building regulations and electrical regulations, especially if you change the ventilation or add cables.
- Ensure that the niche or installation space can support the weight of the sauna, including the sauna heater, cabin and people.

The sauna can be installed in a room niche; the following criteria must be observed.service personnelservice personnel

- Access to the power box on the roof of the sauna must be ensured.
- Install the socket at a point between the roof of the sauna and the ceiling of the room, e.g. on the left-hand or visible vertical wall in the front third of the cabin. This ensures access after installation.
- Provide fresh air at the fresh air supply to the cabin.
- Set up the cabin in a sufficiently large room to ensure an exchange of air around the sauna. This prevents moisture from accumulating between the sauna and the walls of the room. Observe the recommended wall clearance of at least 2" (50 mm) on all sides of the cabin.
- Avoid blocking the natural air flow around the sauna, especially near the air inlets and outlets, to maintain performance and prevent overheating.

Extensions for the existing exhaust air system are described below (these extensions are not included in the purchase price and scope of delivery)service personnel.

- The exhaust air from the sauna can be fed back into the room using an extension of the existing exhaust air duct.
- The exhaust air from the sauna can also be routed from the existing exhaust air duct to the outside via a separate exhaust air system.
  The exhaust air system should have a diameter of at least 4" and be made of polypropylene (PP).
- A fan is required from an exhaust air duct length of 12 feet (3.65 m) or if more than two elbows are used.
  The fan should not exceed an output of 40–50 cfm (1.1–1.4 m^3/min). A more powerful fan reduces efficiency and impairs the performance of the sauna. Do not operate the fan while the sauna is heating up, as this will extend the heating time. We recommend that you switch on the fan when entering the sauna and ventilate the sauna after use.

1 7. PREPARING INSTALLATION PARTS

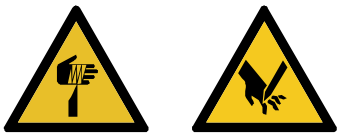

1. Secure the parts to prevent them falling over.
2. You can find further information on unpacking the sauna components in the unpacking instructions.
3. Work in pairs to transport installation parts to the installation site.

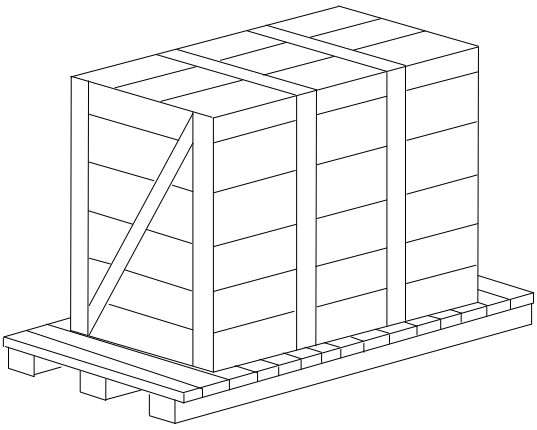

HAZARD WARNINGS

Risk of injury or damage to property.
Falling or sharp-edged parts can cause injuries.
Injuries can occur when opening the packaging and packaging films.
Parts or electrical cables can get damaged.

- Safety shoes and protective gloves must be worn when transporting the parts to the installation site.
- Remove packaging films with care, protecting your hands.
- Lift parts carefully off the palette and secure them to prevent them falling over. Do not crush or trap electrical cables.
- Take care not to damage electrical cables or sauna parts when opening the packaging.

KOHLER

2

8. INSTALLING THE SAUNA

8.1. Bottom frame – overview

A	8x	= MP490005
B	32x	= MP440006
		= ASSY AW20

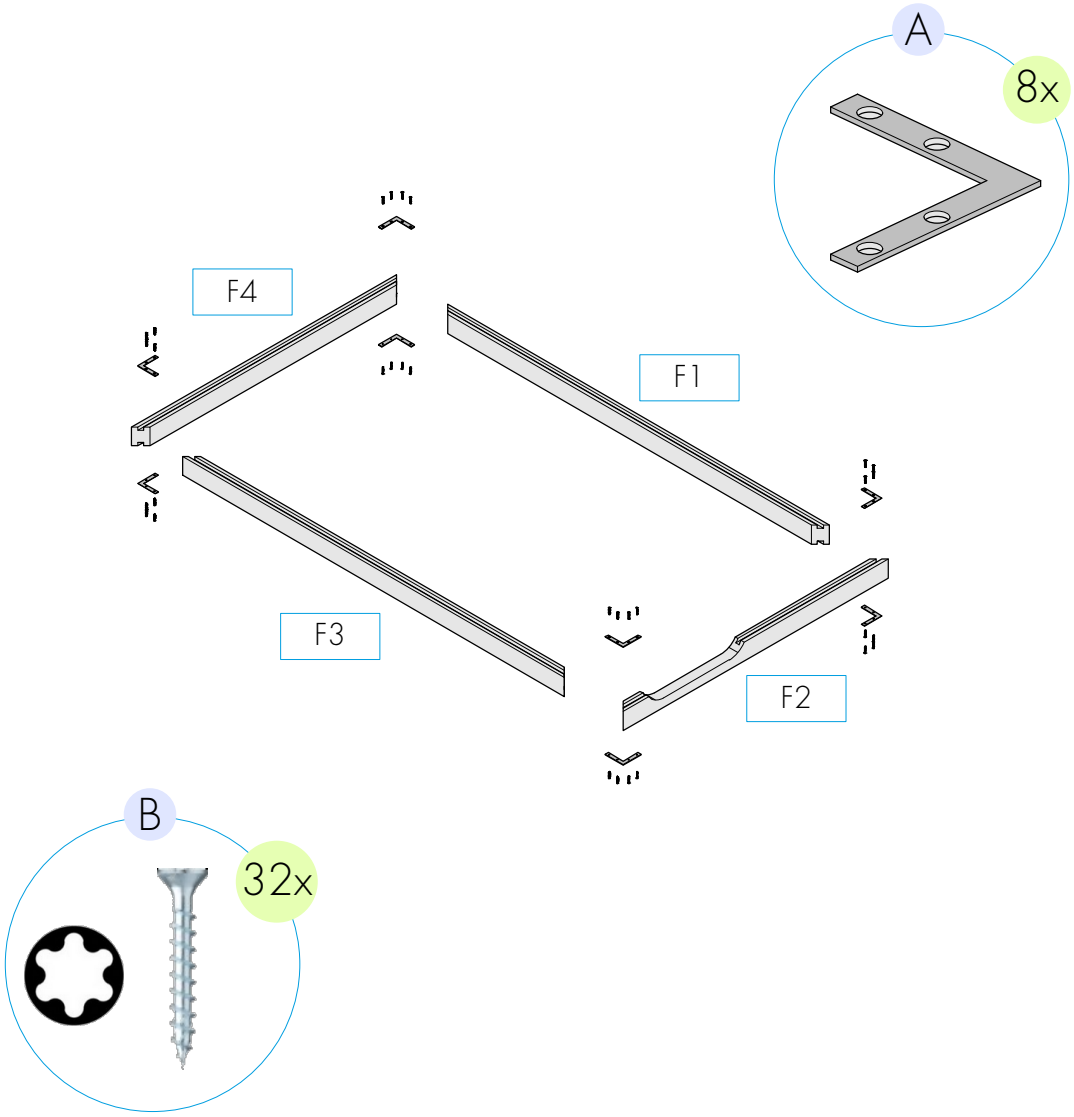

NOTICE

Supply-air cutout must be on top once the bottom frame is fully installed.
Firstly, screw the bottom frame sections together from below.
Then, turn it through 180 degrees and screw together from above.

3 8.2. Bottom frame – installation

A	4x	= MP490005
B	16x	= MP440006
		= ASSY AW20

1. Turn over the bottom frame (A) and lay it out.
2. Align the bottom frame sections at a 90 degree angle from each other (B).
3. Screw the bracket (C) to the corner joint in the groove on the bottom frame (D).

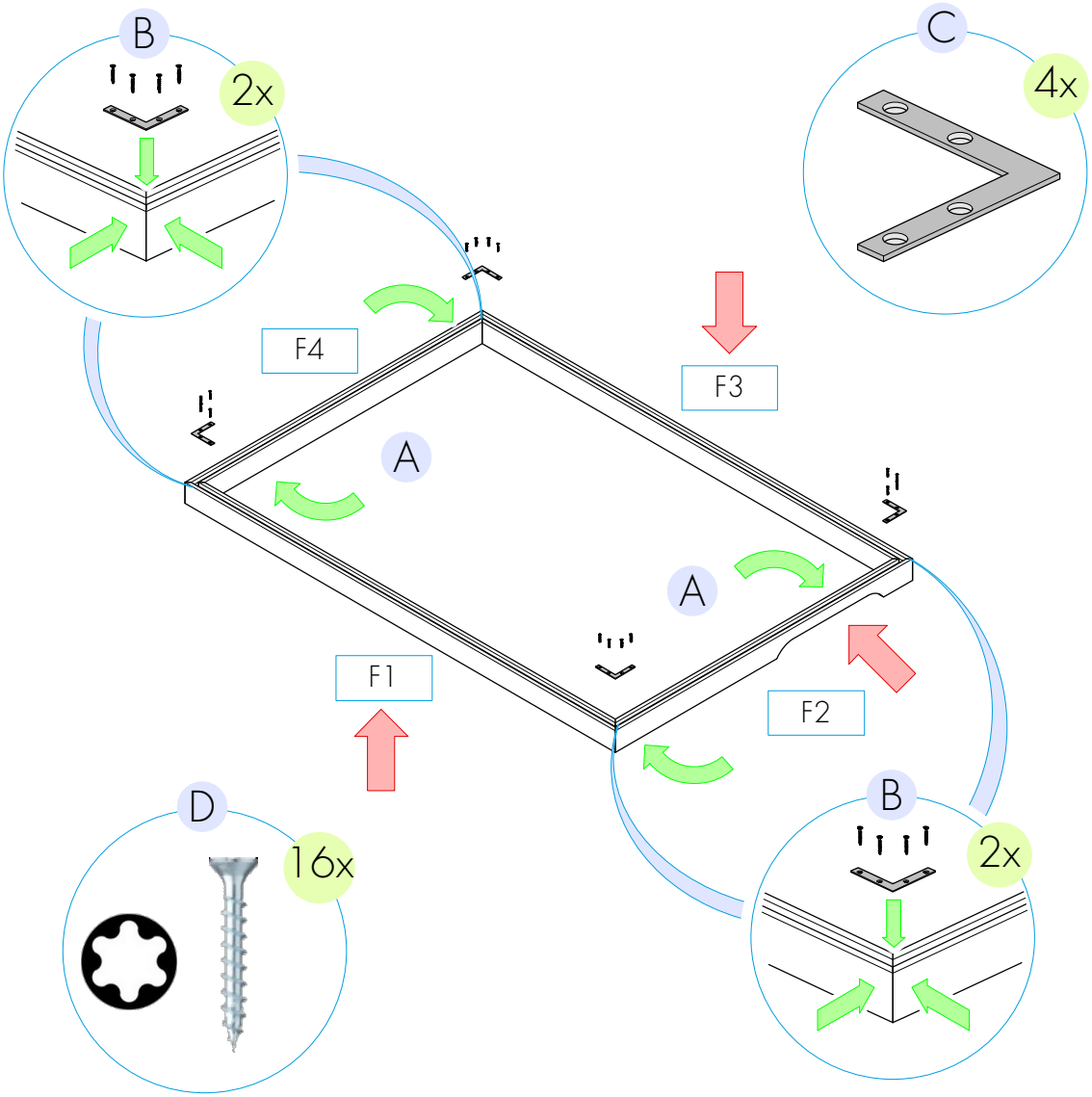

NOTICE

Firstly, screw the bottom frame sections together from below.
On bottom frame section F2, place the supply-air cutout on the underside.

KOHLER

4 8.2. Bottom frame – installation

B	4x	= MP490005
C	16x	= MP440006
		= ASSY AW20

1. Turn the bottom frame through 180 degrees and screw together from above.

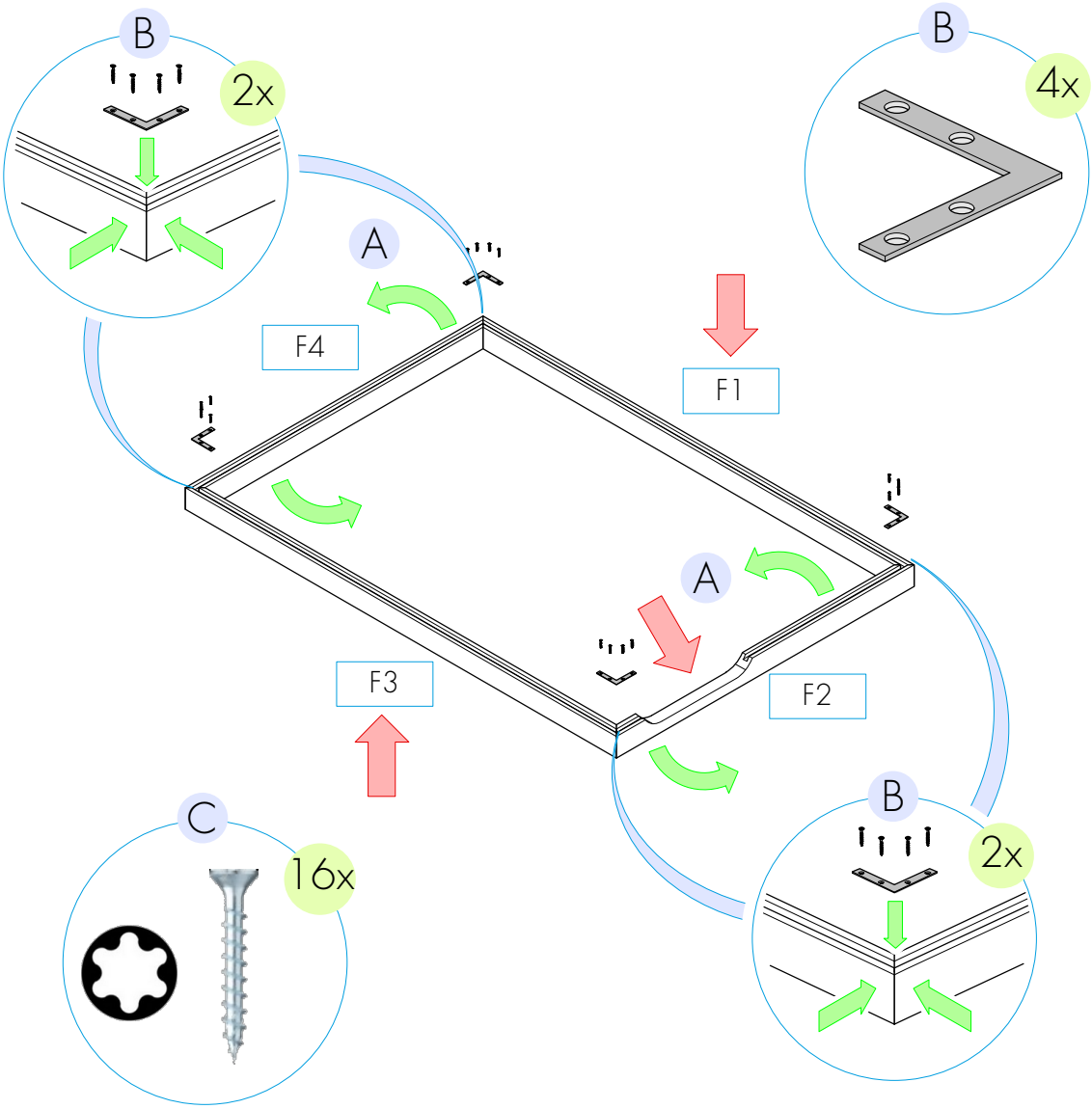

NOTICE On bottom frame section F2, the supply-air cutout must be on the top side.

5

8.3. Bottom frame – alignment

A	= MO190474 = MO190475 = MO190476 = MO190477

1. Position the bottom frame in the ultimate installation location at a distance of at least 2"/50 mm from the wall facing the installation.
2. Line up the bottom frame on all sides, using the spirit level.
3. If necessary, place a spacer under the bottom frame; see (A).

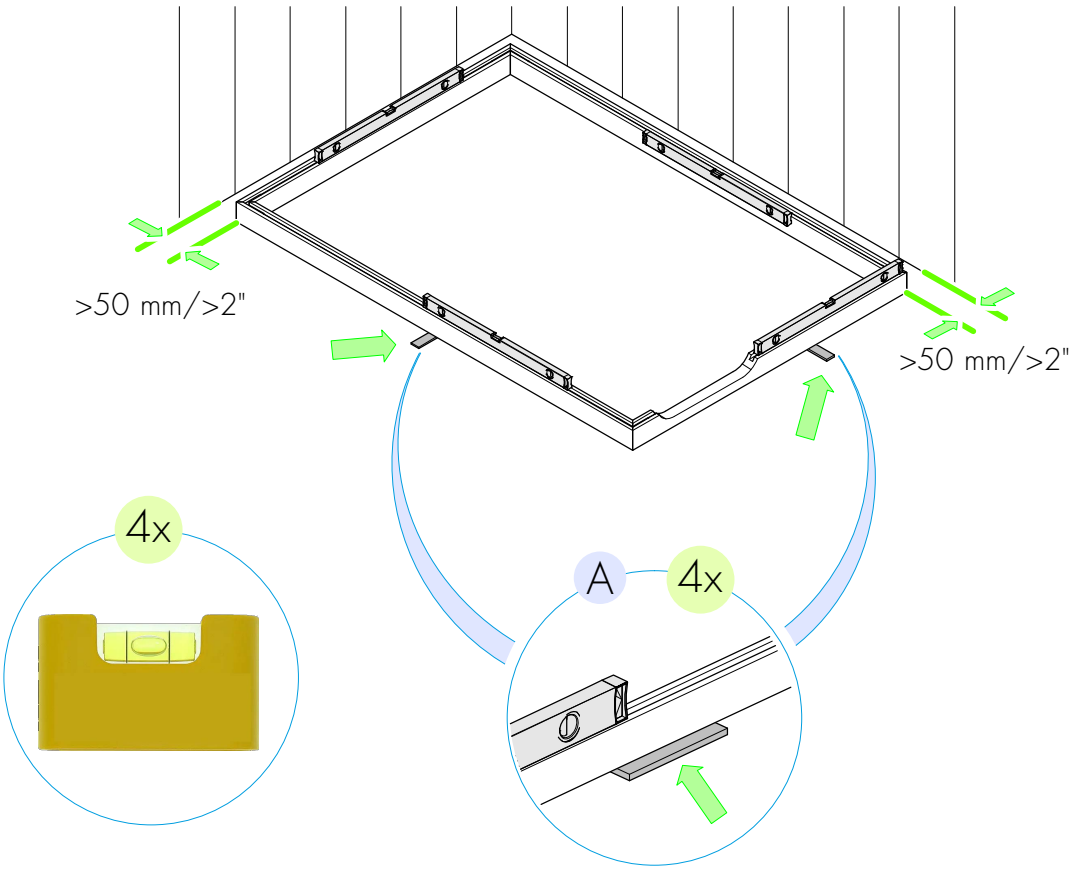

"Floor Kit" installation option:
Option – Floor panels - laying out
see sheet 5.2

NOTICE

A level bottom frame constitutes the basis and prerequisite for a seamless setup and a perfectly fitting installation.

5.1 8.4. Option – Floor panels - laying out

"Floor Kit" installation option:
= 38440-1FNC-SPS
= 39963-1FNC-CGS
A, B 2x = 30501959

1. Lay the floor with the plastic sliders facing down in the bottom frame that is already in place.

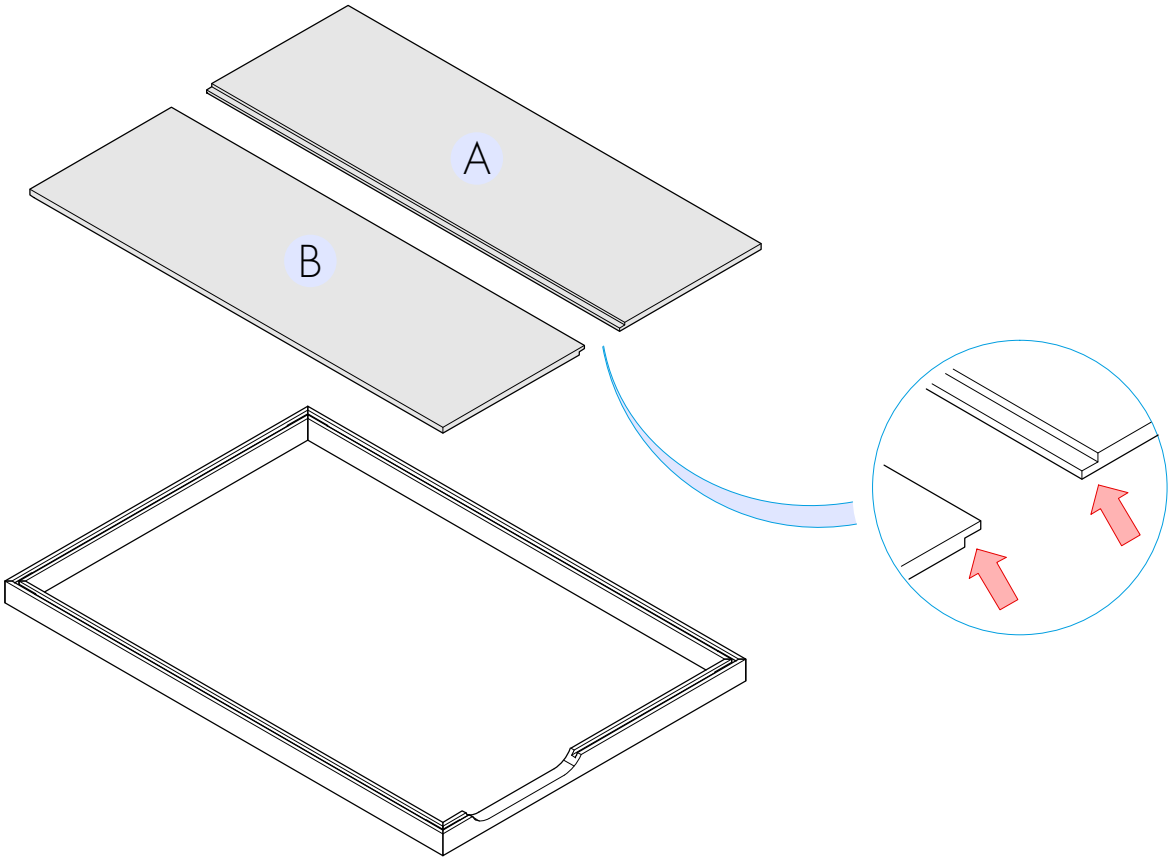

5.2 8.4. Option – Floor panels - laying out

"Floor Kit" installation option:
A 8x = MP440210
B 14x = M440041

1. Screw the floor panels together at the pre-drilled holes (A).
2. Screw floor strips FL1 (4x), FL2 (2x), FL3 (1x), FL4 (4x), FL5 (3x) onto the bottom frame using self-tapping screws (B).

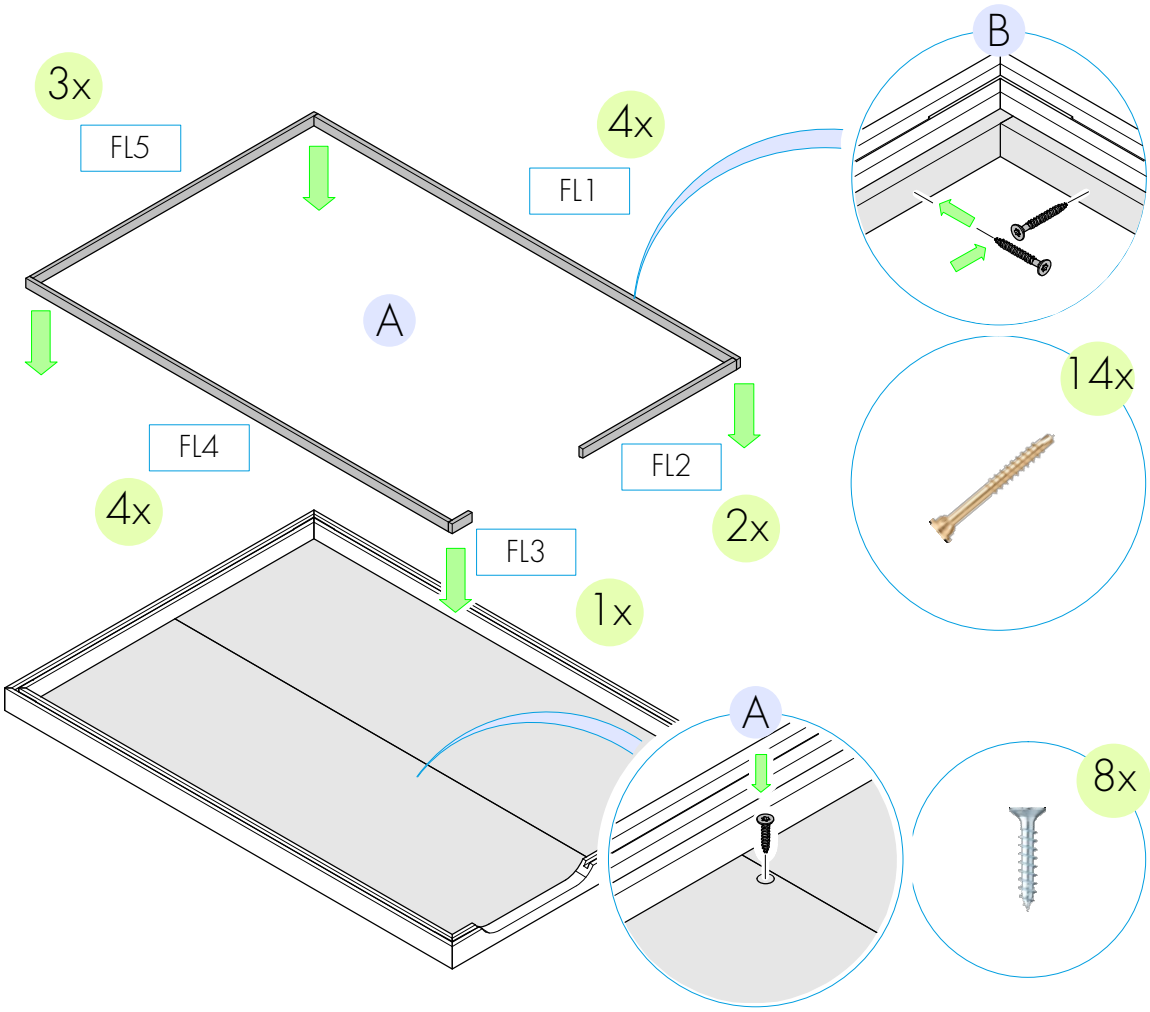

ATTENTION

Risk of damage to property.
The floor panels can be damaged during the remaining installation process.
Lay a non-woven protective sheet over the floor panels for the remaining installation.

6

8.5. Cabin Body – assembly

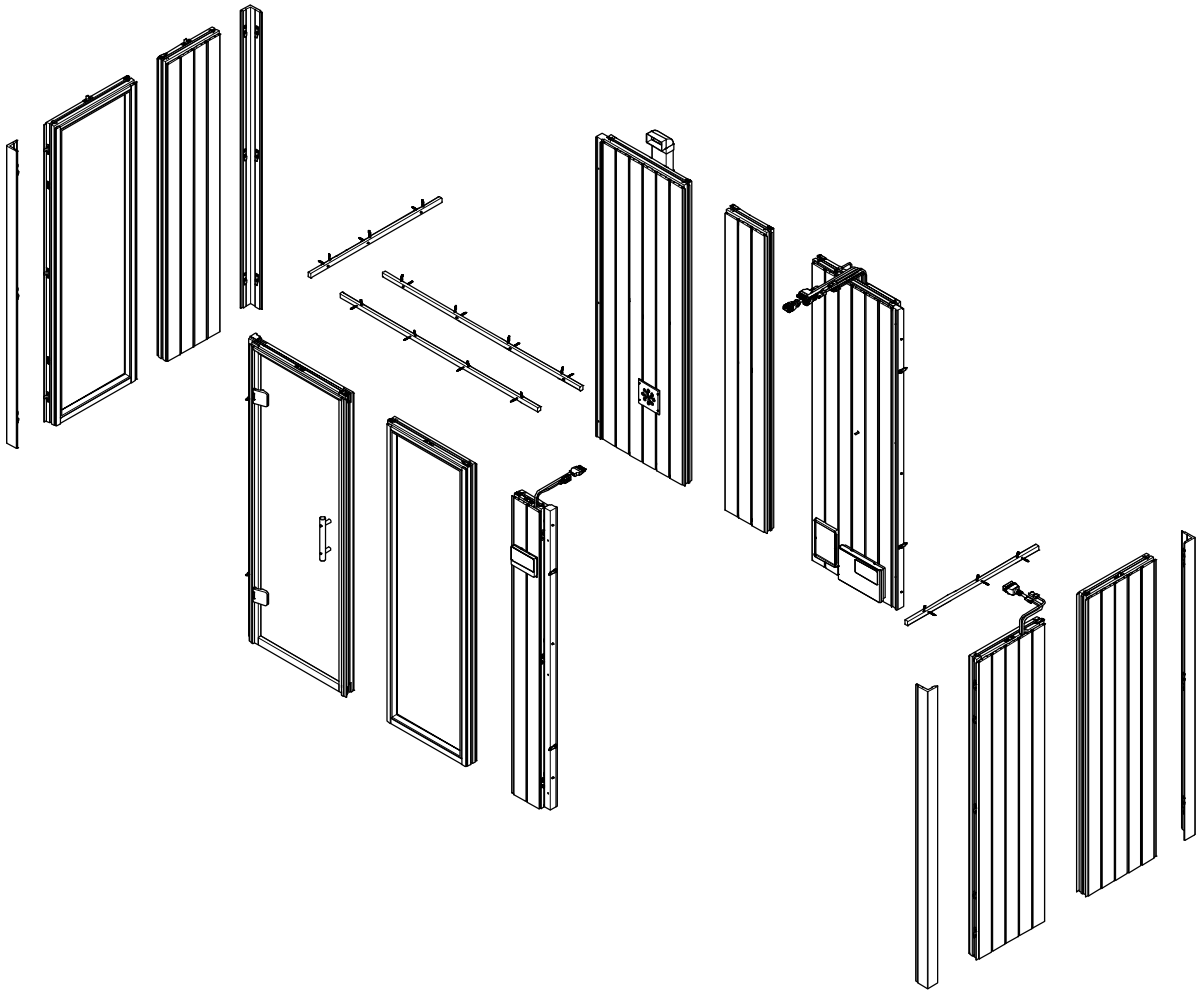

ATTENTION

Risk of damage to property.
Wall sections may fall down and become damaged.
Electrical cables can get damaged.
Place wall sections on their underside and prevent them from falling down. Do not crush electrical cables!

KOHLER

7	8.6.	Cabin Body – taping sealing strip onto wall sections	A = MO190032

1. For every straight wall connection, stick a sealing strip onto the inner wooden frame (inside) (A).
2. For corner wall connections, do not apply sealing strip.

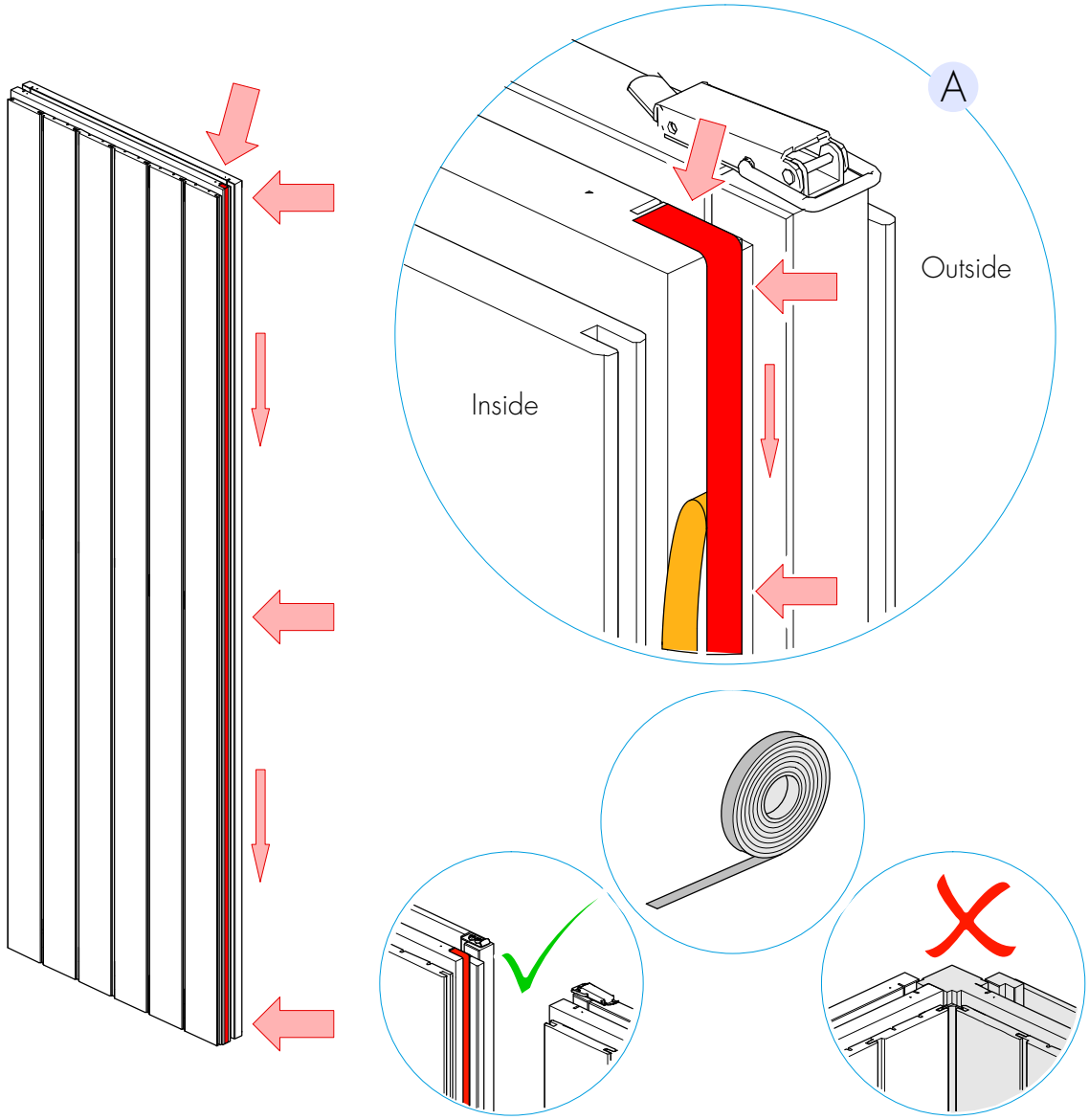

NOTICE Just before installing the wall section, tape sealing strip along the entire length of the inner wooden frame.

8 8.7. Cabin Body – spring-loaded toggle latch

1. Push back the bracket on the spring-loaded toggle latch before installing the wall element (A).
2. Open the latch (B).
3. Hang the bracket on the hook (C).
4. Close the latch (D).

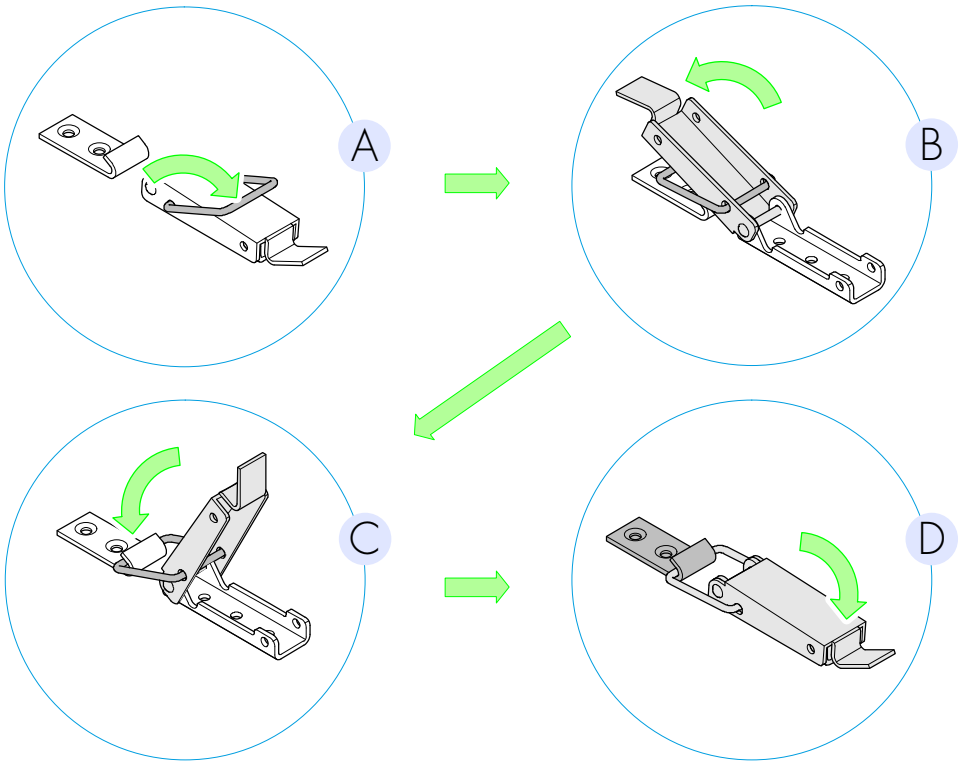

9

8.8. Cabin Body – assembling the cabin wall sections

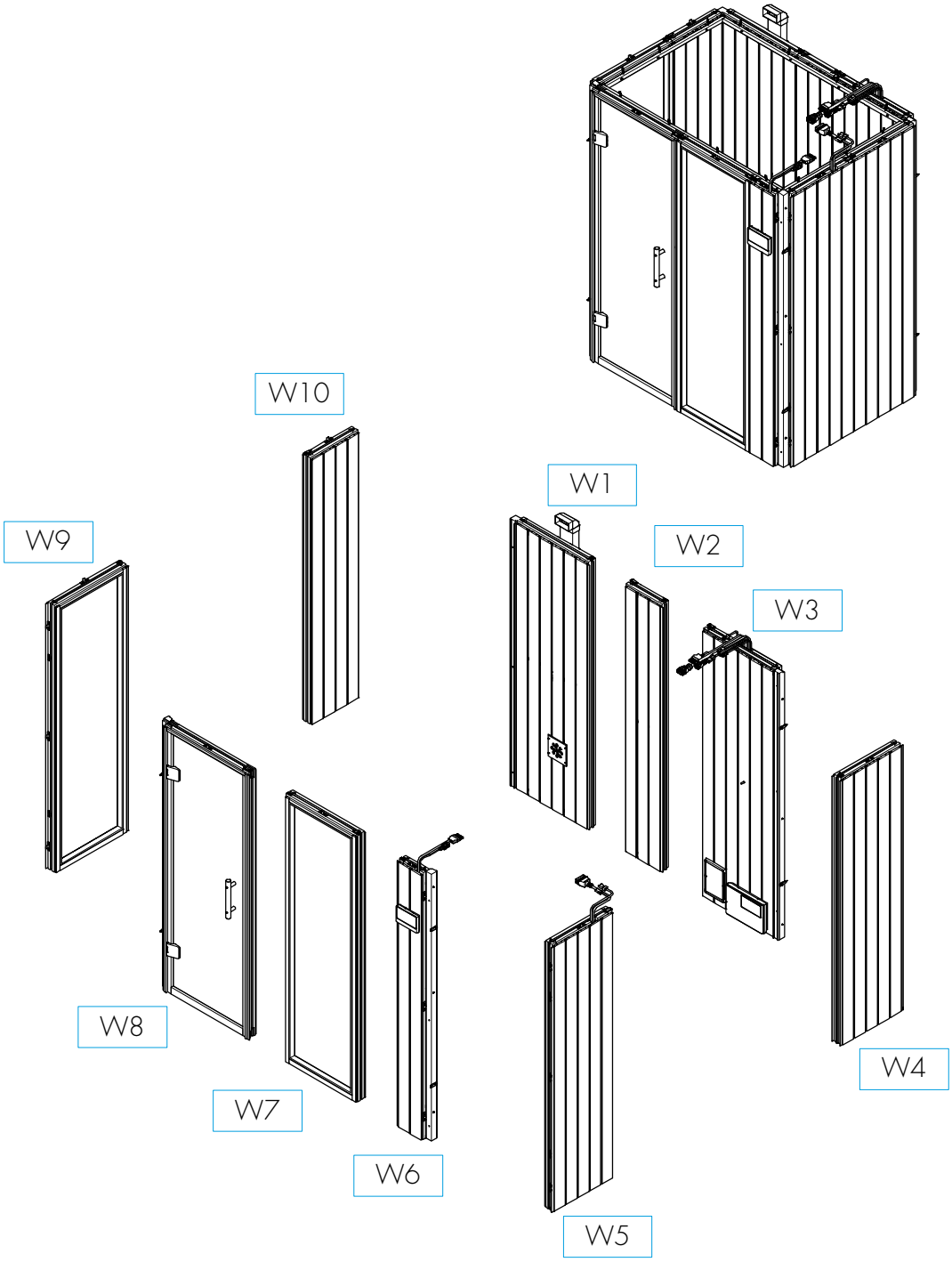

10 8.9. Cabin Body – putting up the wall sections

1. Place wall section W1 in the groove on the bottom frame (A) and secure it so it cannot fall down.
2. Position the tongue on wall section W1 in the corner, aligned with the groove on the bottom frame (B).
3. Push back the bracket (C). Place wall section W10 in the groove on the bottom frame (D).
4. Push wall section W10 into the tongue for wall section W1 (E). Hook in the bracket and close the latch (F).

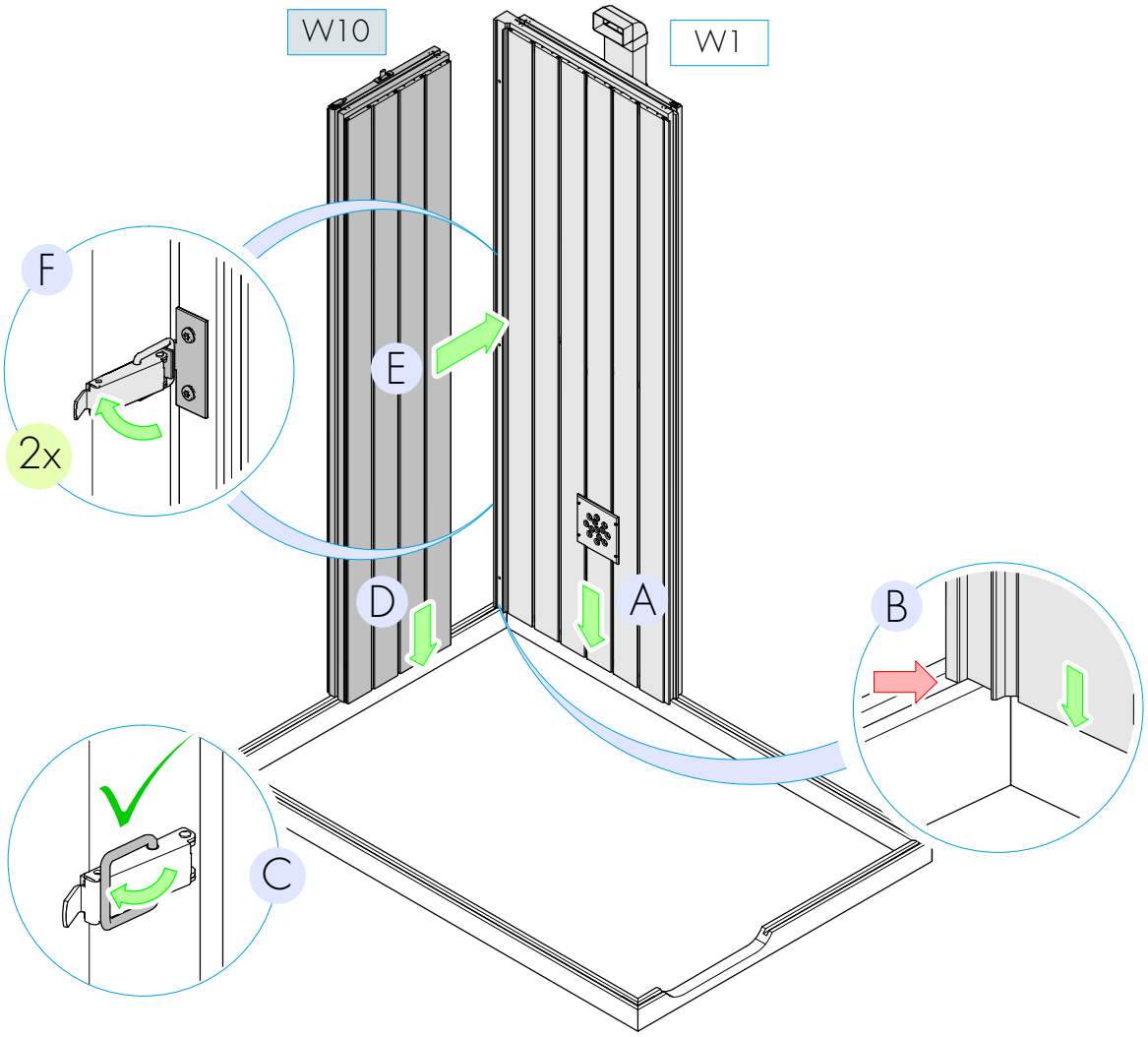

ATTENTION

Risk of damage to property
Wall sections may fall down.

Start installation of the first two wall sections at the corner. Hold the wall sections in place until they are joined together.

11

8.9. Cabin Body – putting up the wall sections

1. Tape sealing strip on wall section W1 (A).
2. Push back the bracket (B). Place wall section W2 in the groove on the bottom frame (C).
3. Push wall section W2 into the tongue for wall section W1 (D).
4. Pivot wall section W2 into the tongue for wall section W1 (E). Hook in the bracket and close the latch (F).

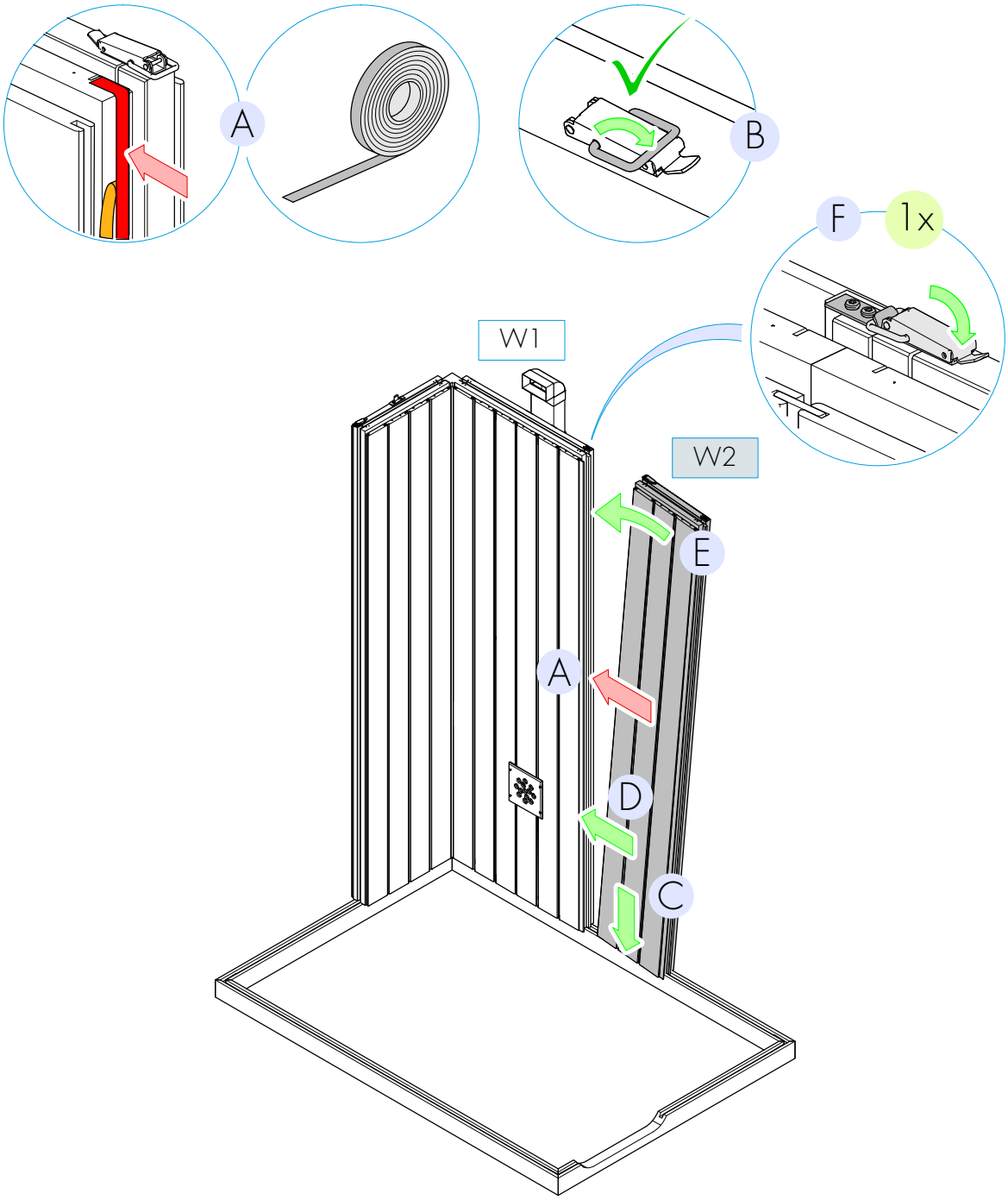

12 8.9. Cabin Body – putting up the wall sections

1. Tape sealing strip on wall section W2 (A).
2. Push back the bracket (B). Place wall section W3 in the groove on the bottom frame (C).
3. Push wall section W3 into the tongue for wall section W2 (D).
4. Pivot wall section W3 into the tongue for wall section W2 (E). Hook in the bracket and close the latch (F).

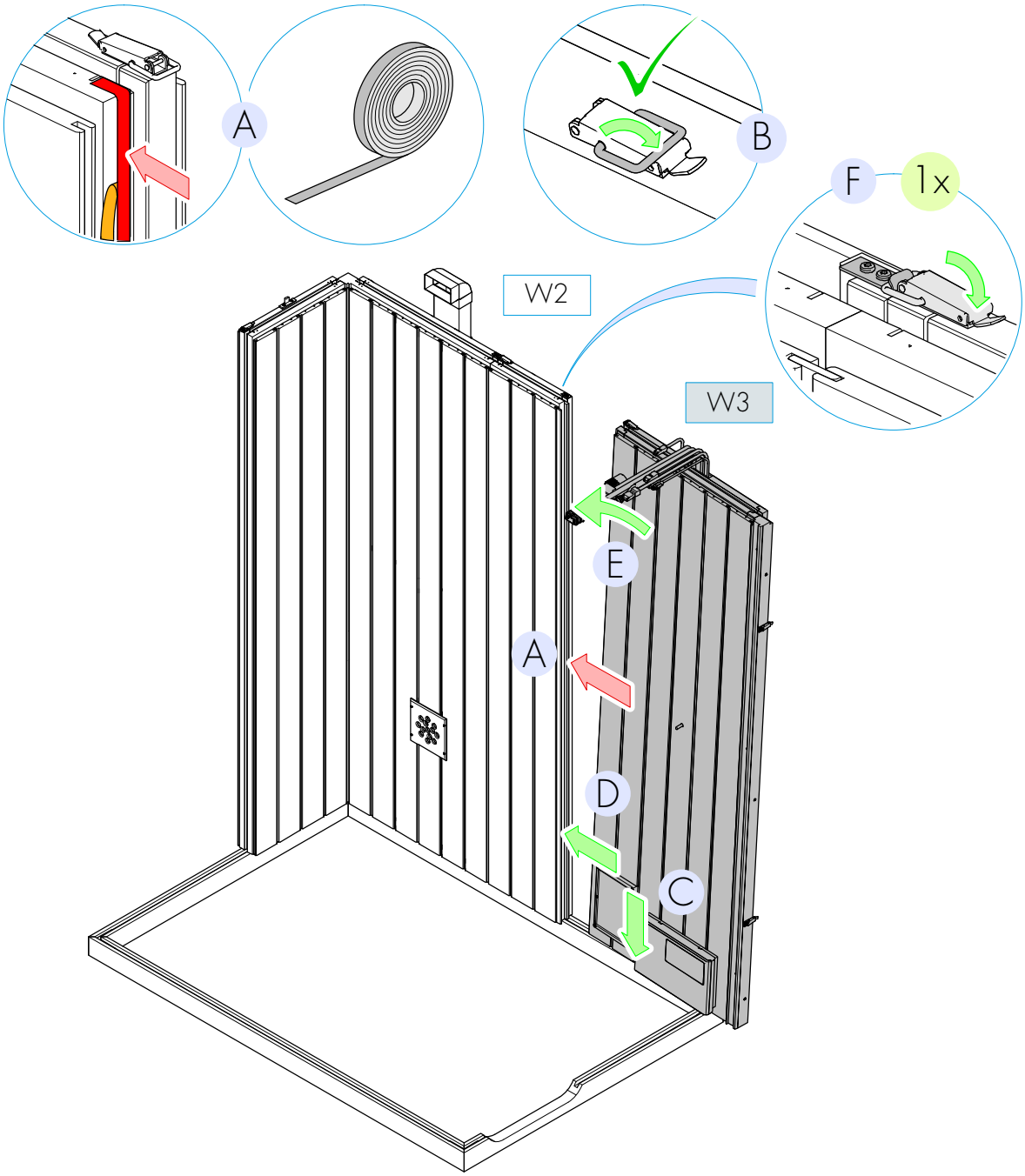

13

8.9. Cabin Body – putting up the wall sections

1. Push back the bracket (A). Place wall section W4 in the groove on the bottom frame (B).
2. Push wall section W4 into the tongue for wall section W3 (C).
3. Pivot wall section W4 into the tongue for wall section W3 (D). Hook in the bracket and close the latch (E).

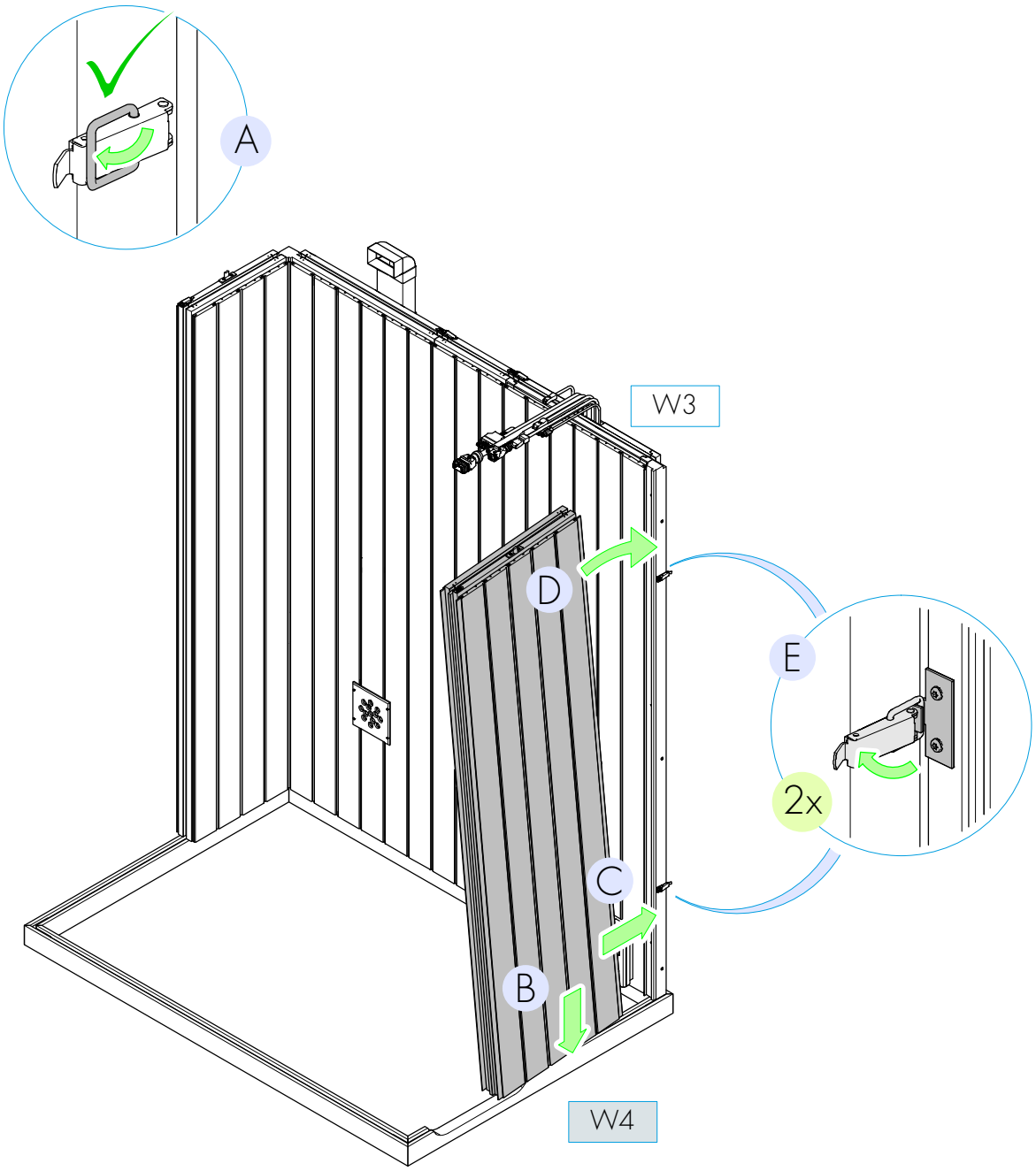

14

8.9. Cabin Body – putting up the wall sections

1. Tape sealing strip on wall section W4 (A).
2. Push back the bracket (B). Place wall section W5 in the groove on the bottom frame (C).
3. Push wall section W5 into the tongue for wall section W4 (D).
4. Pivot wall section W5 into the tongue for wall section W4 (E). Hook in the bracket and close the latch (F).

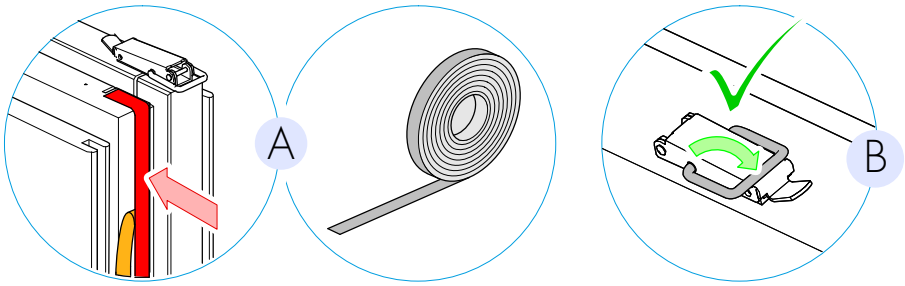

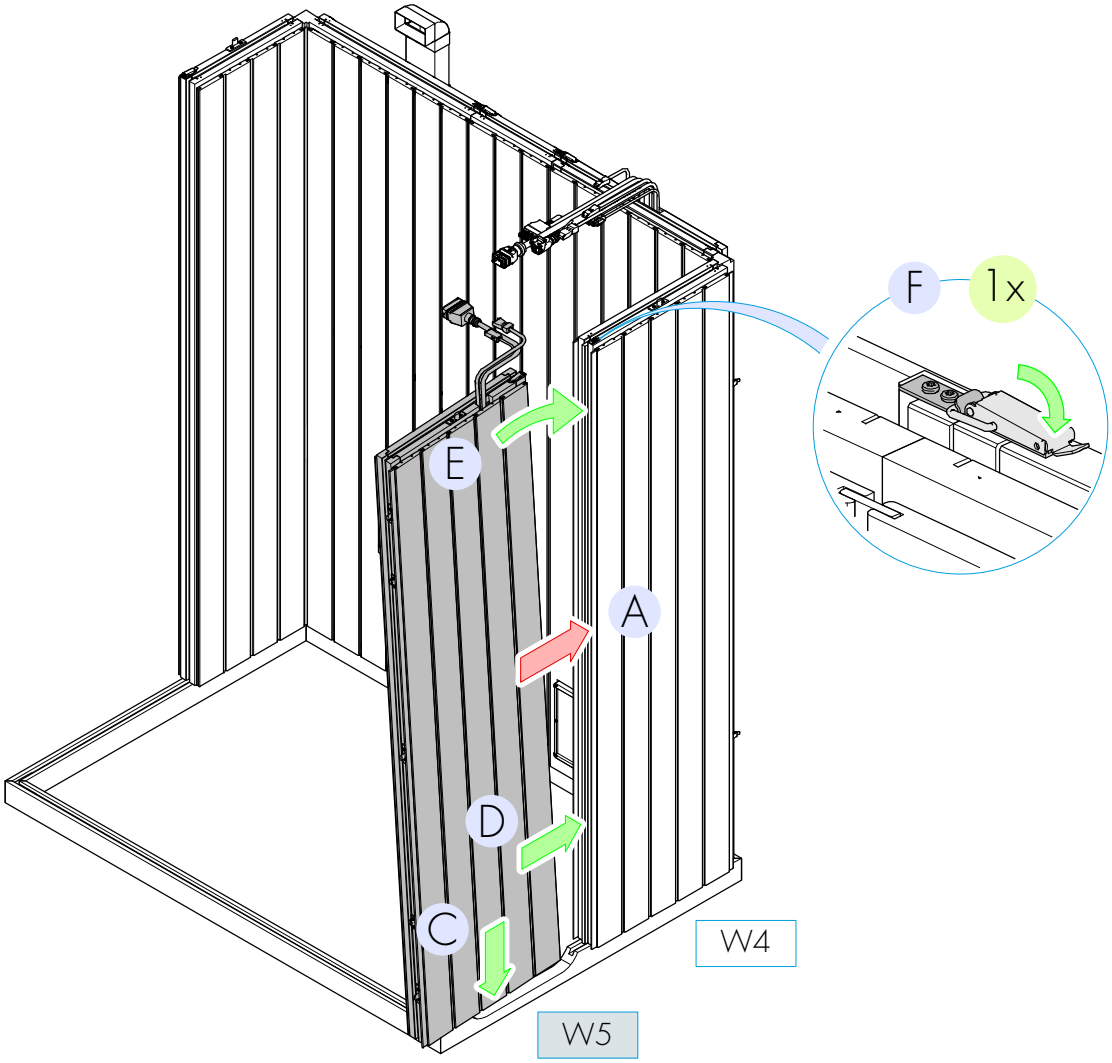

15

8.9. Cabin Body – putting up the wall sections

1. Tape sealing strip on wall section W10 (A).
2. Push back the bracket (B). Place wall section W9 in the groove on the bottom frame (C).
3. Push wall section W9 into the tongue for wall section W10 (D).
4. Pivot wall section W9 into the tongue for wall section W10 (E). Hook in the bracket and close the latch (F).

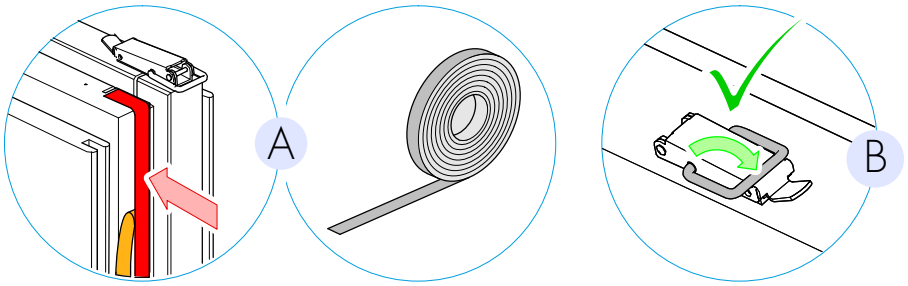

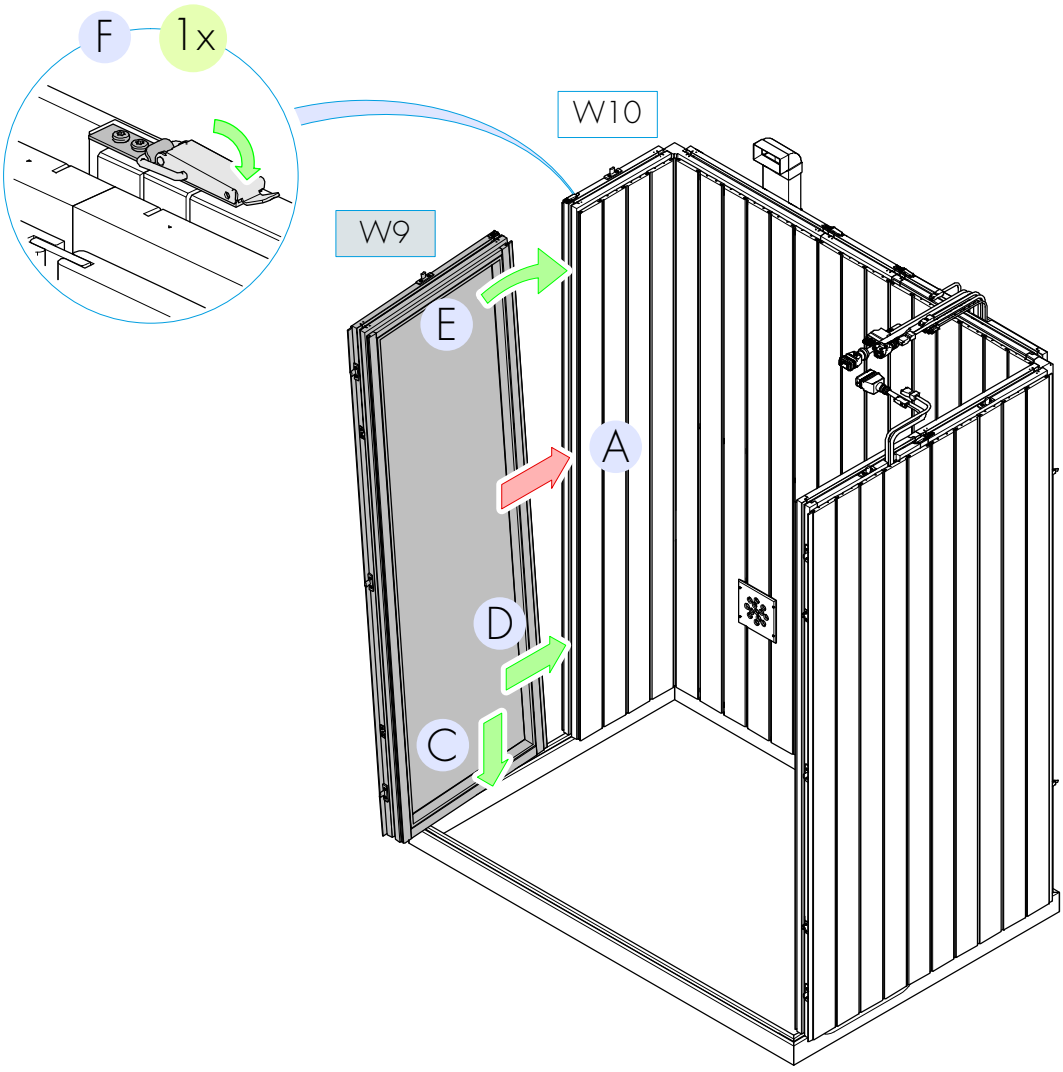

16

8.10. Cabin Body – positioning the first ceiling element

1. Hang all electrical cables of the electric wall elements outside of the cabin (A).
2. Position the first ceiling element C1 (B).
3. Each ceiling element tongue must lock into the corresponding groove (C) on the rear wall and side walls.
4. Notice: Position the sauna heater (D) inside the cabin.

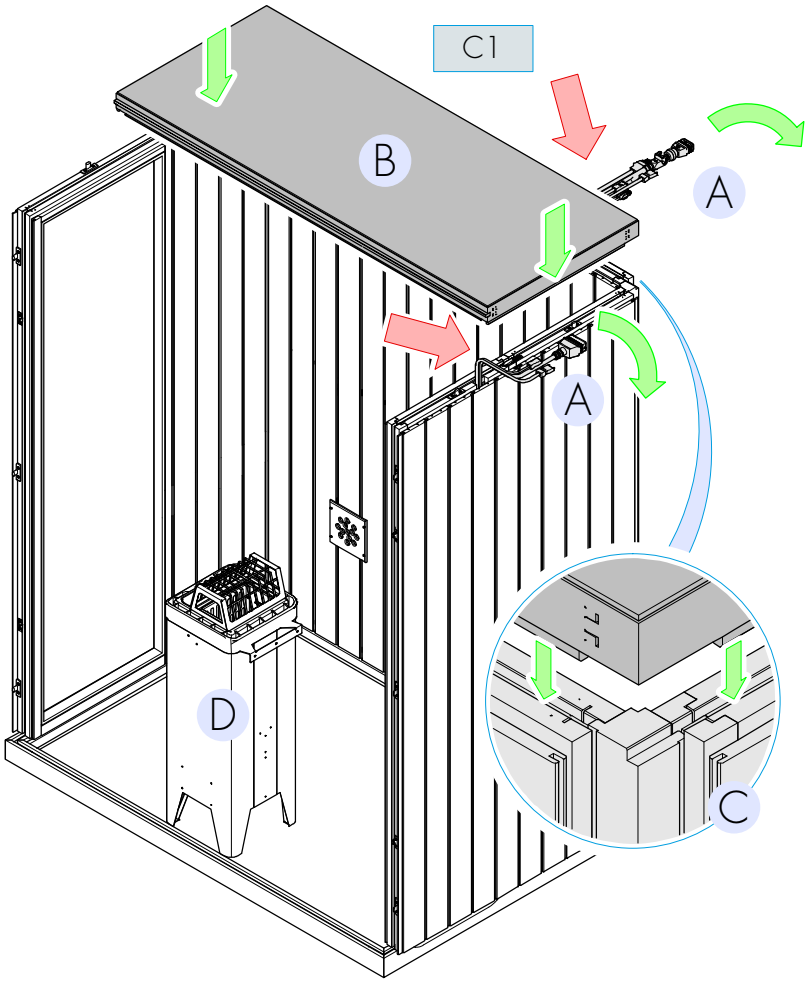

ATTENTION

Risk of damage to property.
Electrical cables can get damaged.
Hang the electrical cables of the electric wall elements outside.

17

8.11. Cabin Body – putting up the wall sections, continued

1. Push back the bracket (A). Place wall section W6 in the groove on the bottom frame (B).
2. Push wall section W6 into the tongue for wall section W5 (C).
3. Pivot wall section W6 into the tongue for wall section W5 (D). Hook in the bracket and close the latch (E).

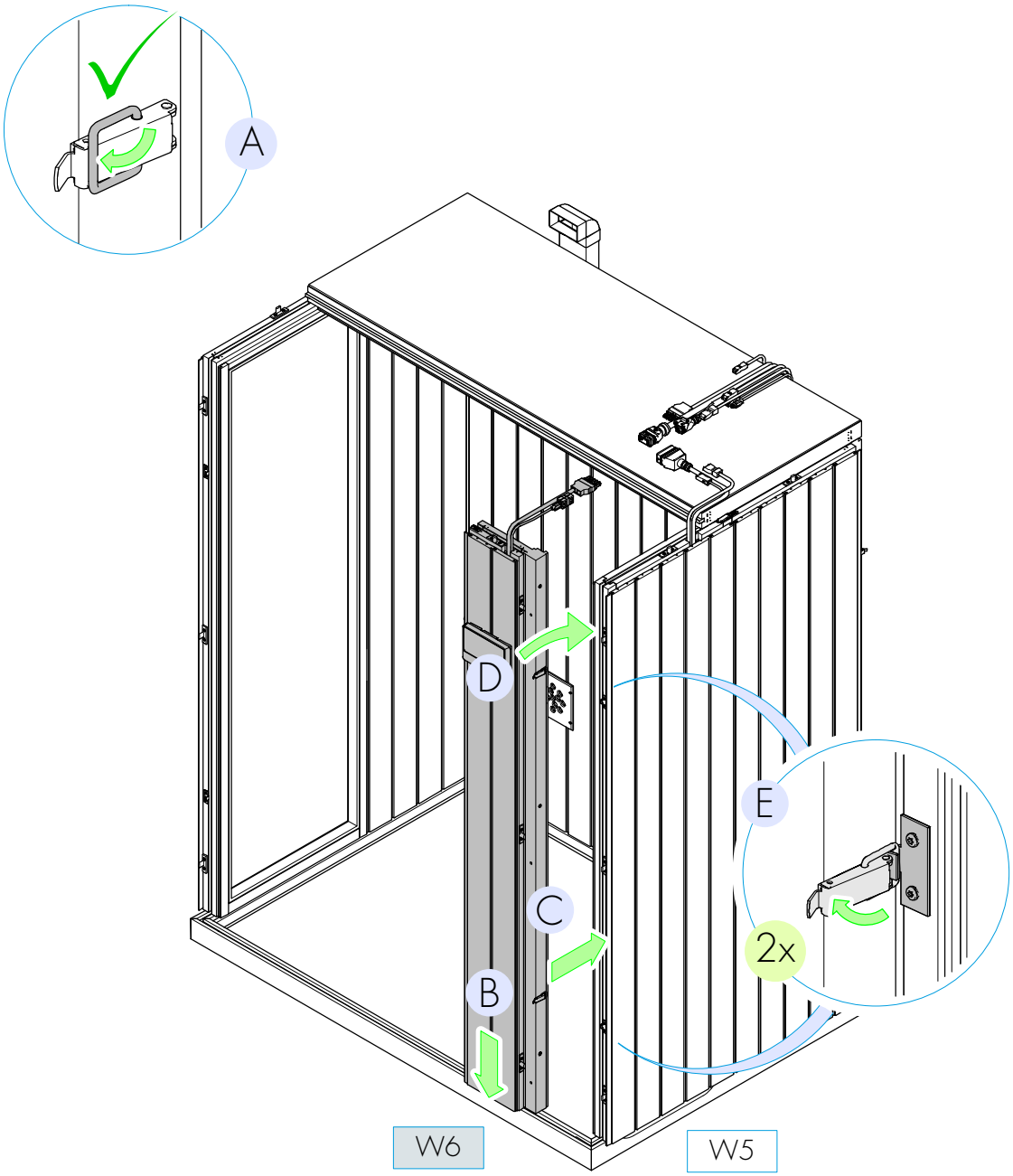

18

8.11. Cabin Body – putting up the wall sections, continued

1. Tape sealing strip on wall section W6 (A).
2. Push back the bracket (B). Place wall section W7 in the groove on the bottom frame (C).
3. Push wall section W7 into the tongue for wall section W6 (D).
4. Pivot wall section W7 into the tongue for wall section W6 (E). Hook in the bracket and close the latch (F).

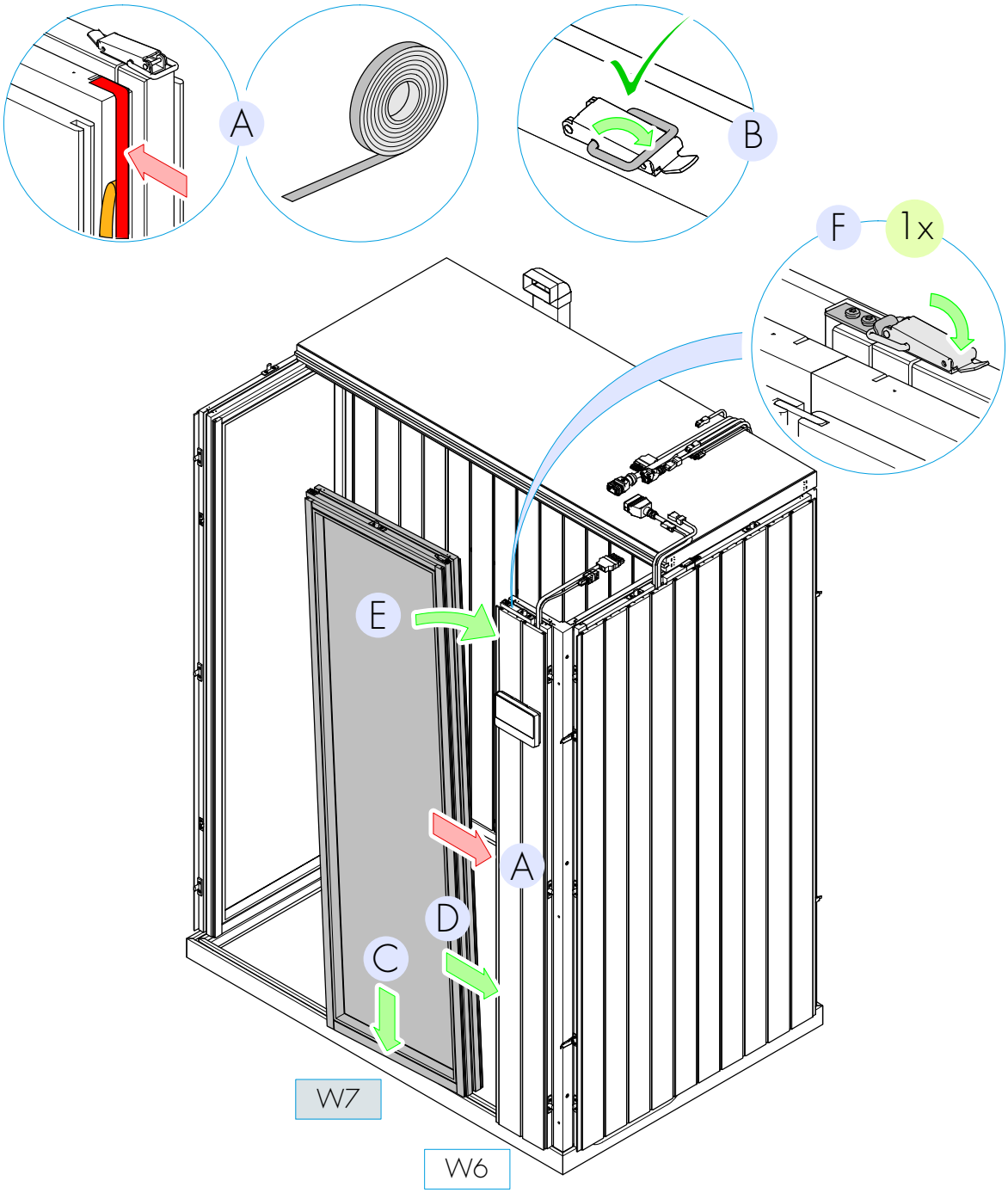

19 8.12. Cabin Body – putting up the wall sections, final

1. Tape sealing strip on wall section W7 (A).
2. Push back the brackets (B, G). Push wall section W8 into the tongues for wall sections W7 and W9 (C) + (D).
3. Place wall section W8 in the groove on the bottom frame (E).
4. Wall section W8 must lock into the groove of wall sections W7, W9 and the bottom frame.
5. Hook in the bracket and close the latches (F, G).

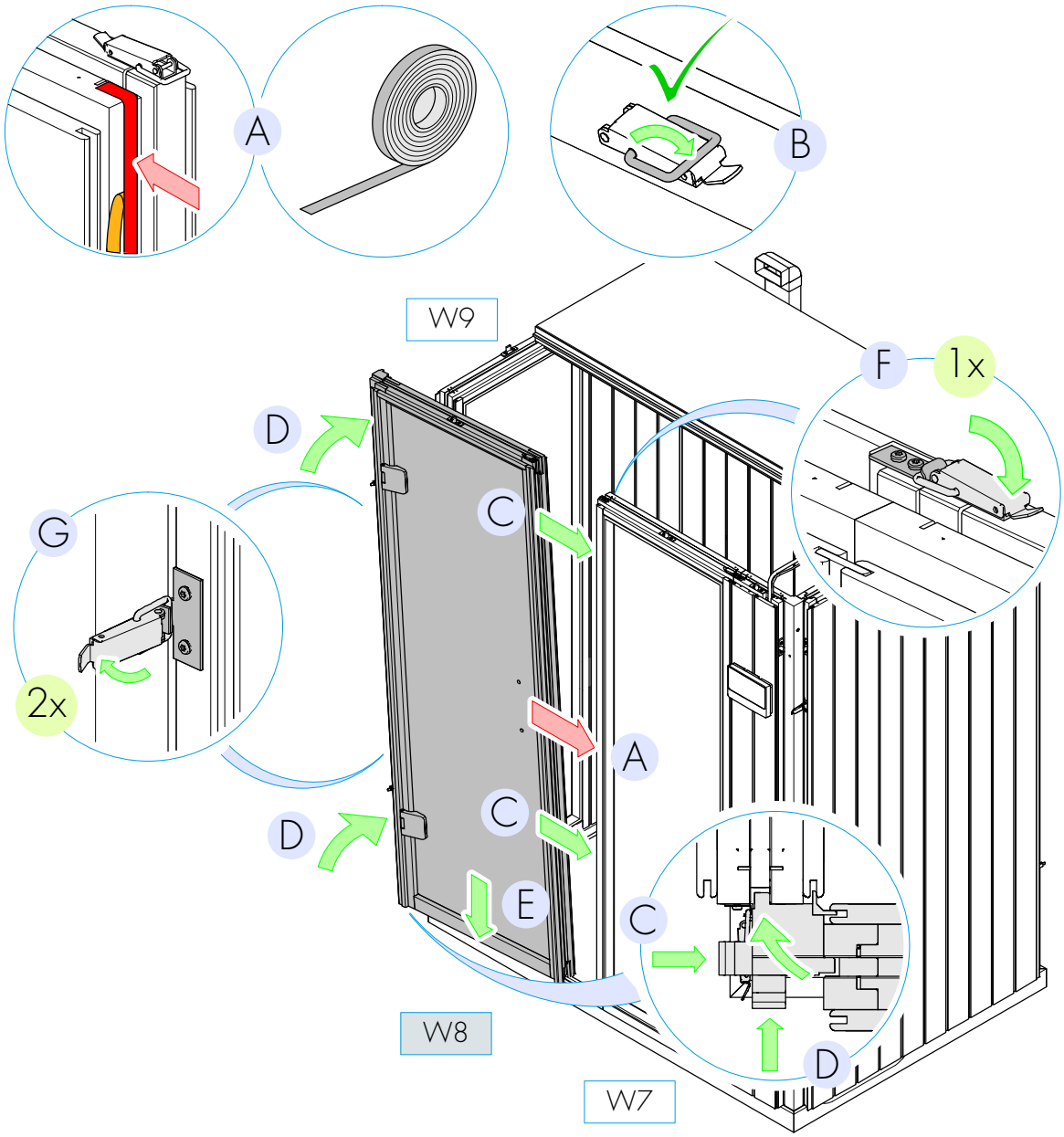

20 8.13. Cabin Body – positioning the second ceiling element

1. Hang all electrical cables of the electric wall elements outside of the cabin (A).
2. Stick the sealing strip to ceiling element C1 (B).
3. Position the second ceiling element C2 (C).
4. Each tongue of ceiling element C2 must lock into the corresponding groove (D) on the front wall, side walls, door and ceiling element C1.

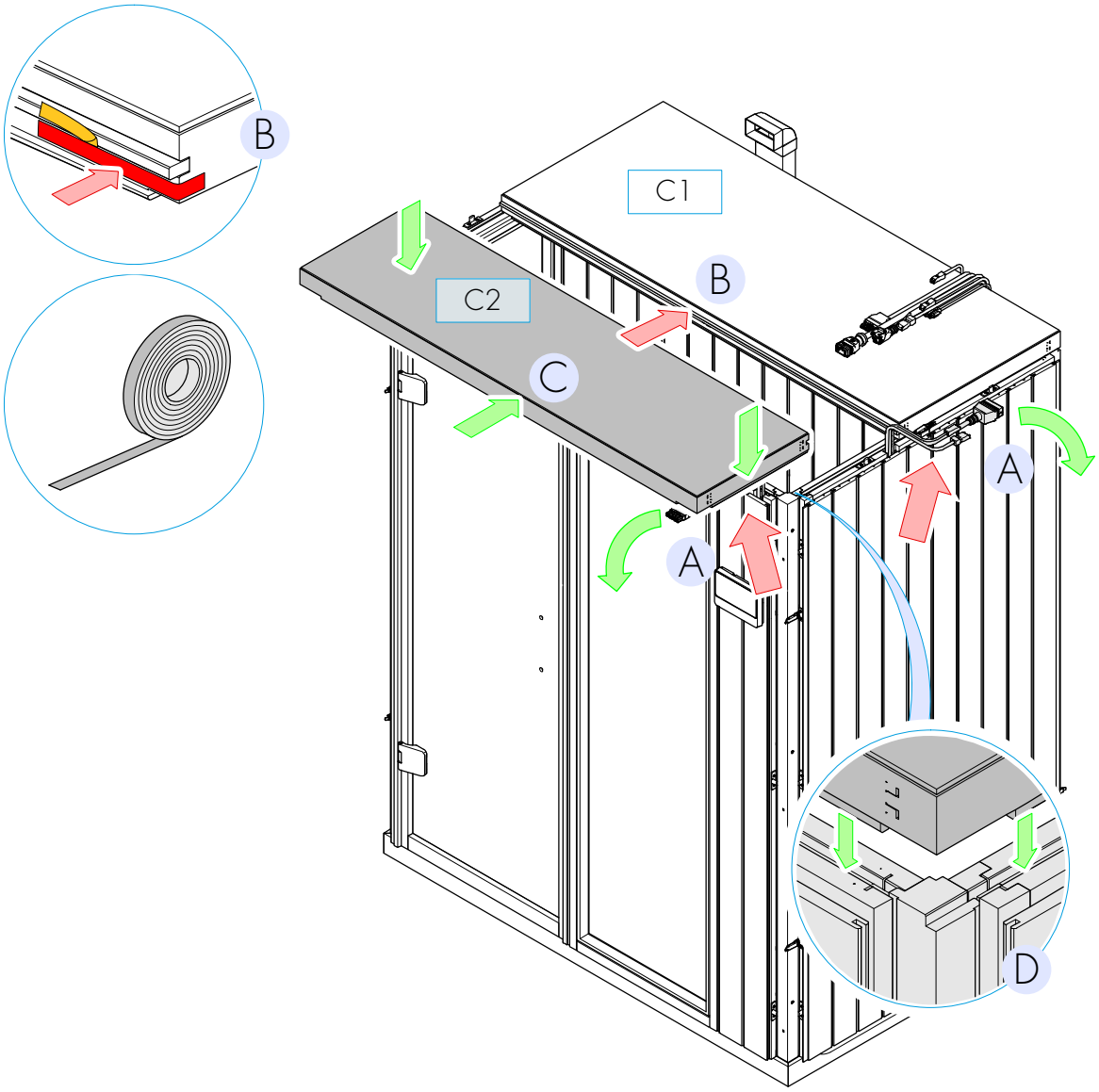

ATTENTION

Risk of damage to property.
Electrical cables can get damaged.
Hang the electrical cables of the electric wall elements outside.

21 8.14. Cabin Body – laying the power pack on the cabin roof

1. Lay all electrical cables of the electric wall elements on the cabin roof (A).
2. Position the power pack centrally on the cabin roof (B).

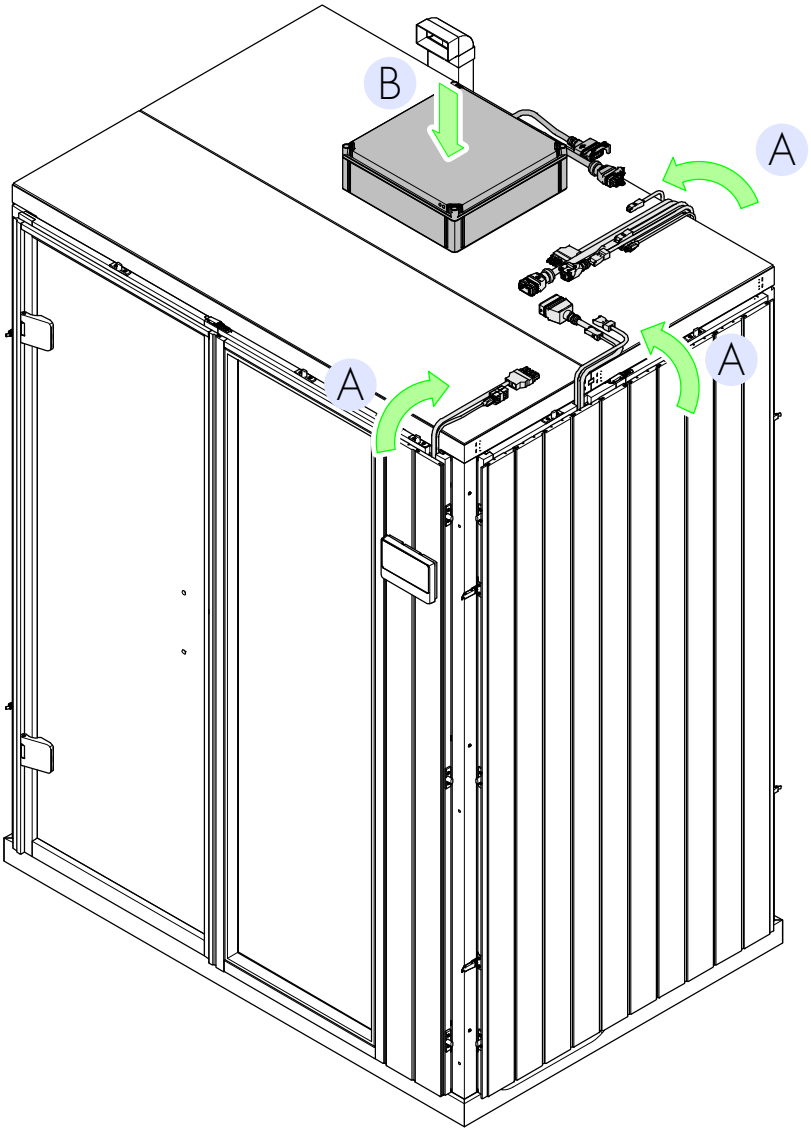

NOTICE Lay all electrical cables on the cabin roof.

22 8.15. Cabin Body – plugging the connector pairs together

1. Plug together 5x RJ connector pairs (A).
2. Plug together 4x connector pairs without retaining brackets (B).
3. Plug together 3x connector pairs with retaining brackets (C).
4. Do not plug the power connector (D) into the wall outlet yet!

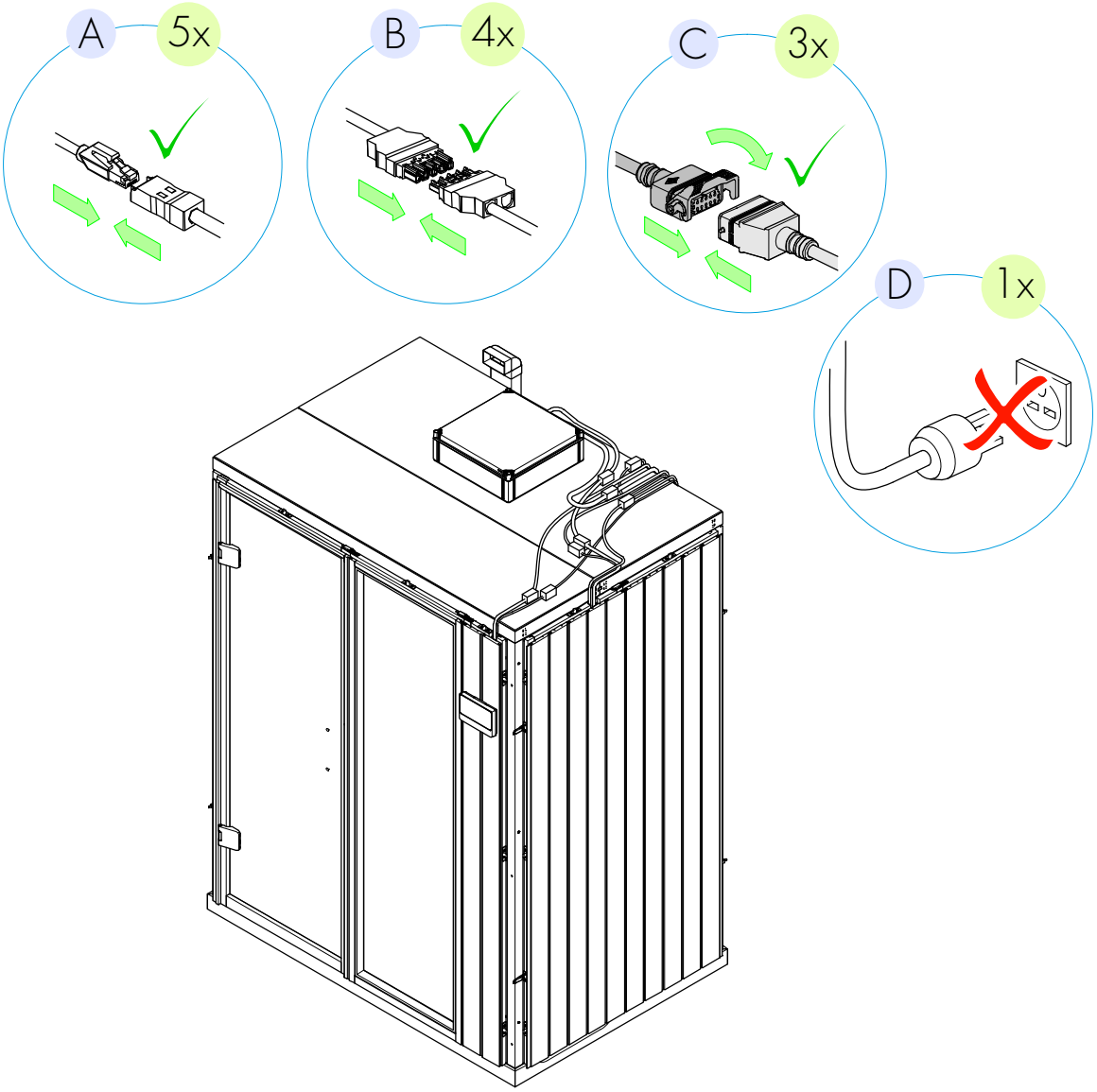

NOTICE

Plug together all connector pairs.
Connectors, Cable list – see page 63, 64.
The connector pairs are not interchangeable.
Close the retaining bracket on any lockable connector pairs.

KOHLER

23	8.16. Cabin Body – fitting the cover strips	A 40x = MP440210

1. Fit the cover strips in the cabin interior.

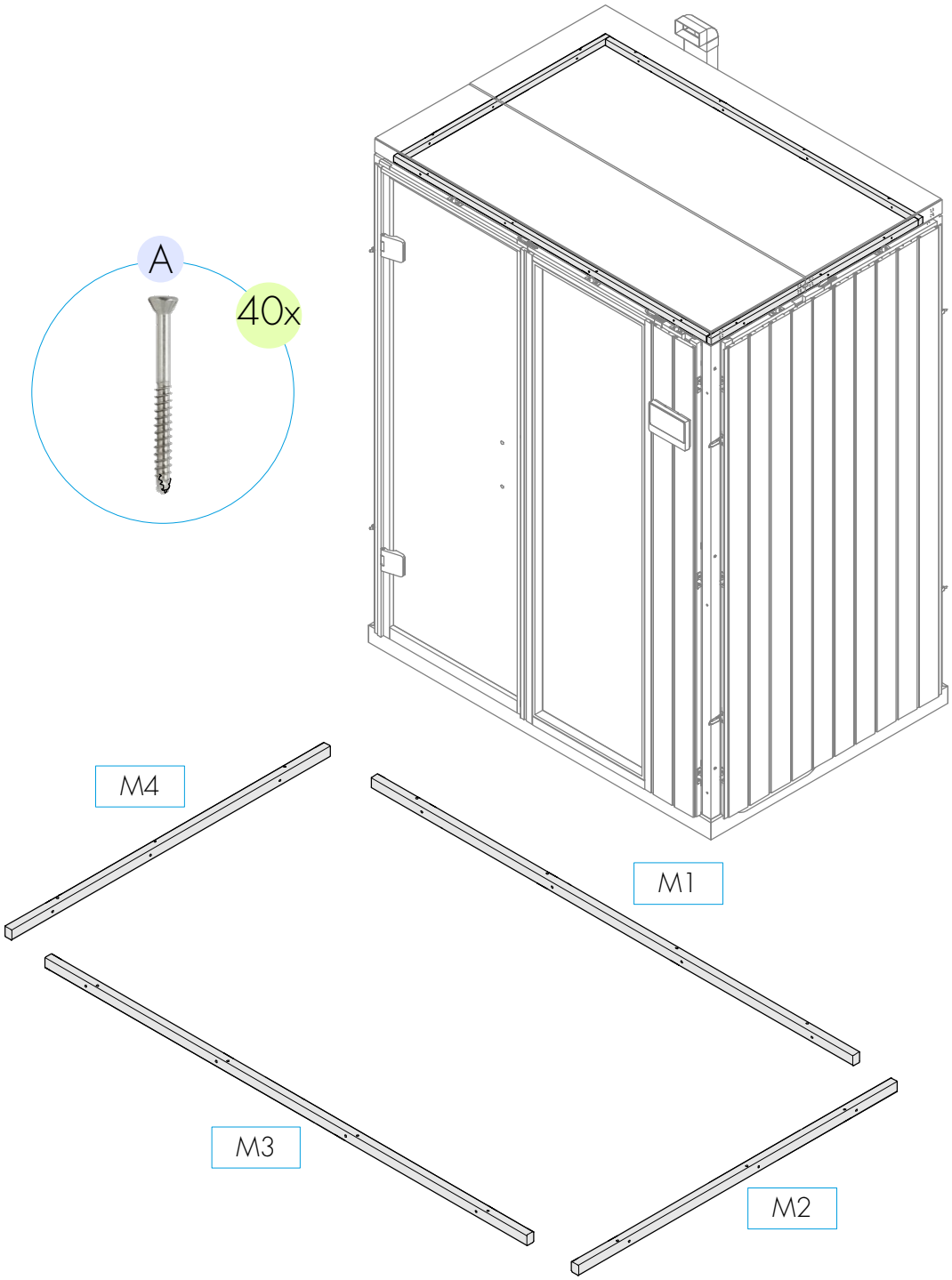

24 8.16. Cabin Body – fitting the cover strips

A	4x	= MP440210
B	3x	= MP440210
C	4x	= MP440210
D	3x	= MP440210

1. Fit the cover strips in the cabin interior.
2. Position cover strip M1 on the cabin's rear wall as far over to the right-hand wall of the cabin as possible (A).
3. Screw cover strip M1 into the corresponding holes on the rear wall of the cabin at a distance of 0.08"/2 mm from the cabin ceiling (A).

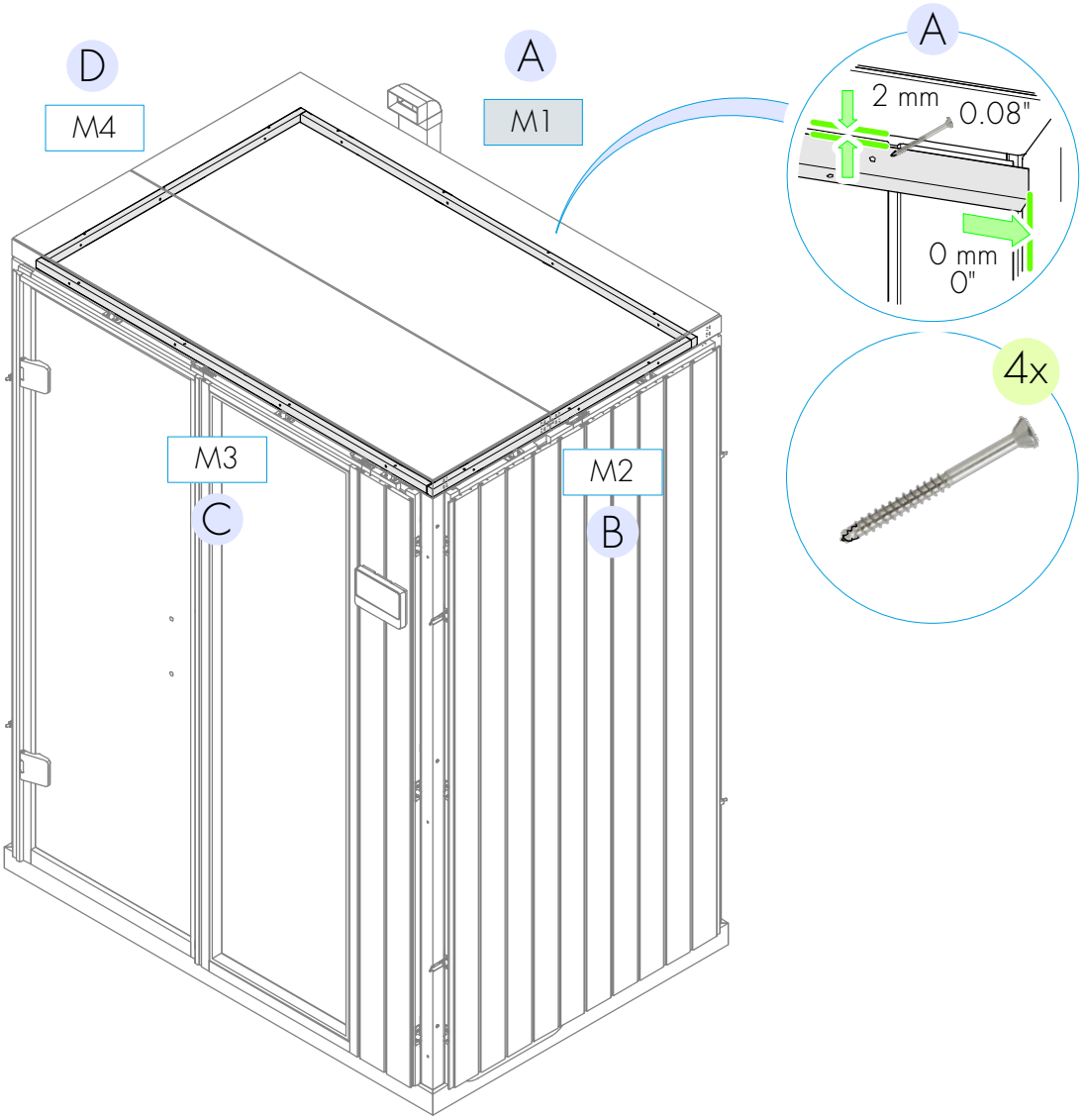

25 8.16. Cabin Body – fitting the cover strips

A	4x	= MP440210
B	3x	= MP440210
C	4x	= MP440210
D	3x	= MP440210

1. Fasten the left-hand edge of the next cover strip M2 (B) to the cover strip that is already fitted (A).
2. In the same way as before, screw cover strips M3–M4 into the corresponding holes on the cabin wall at a distance of 0.08"/2 mm from the cabin ceiling.

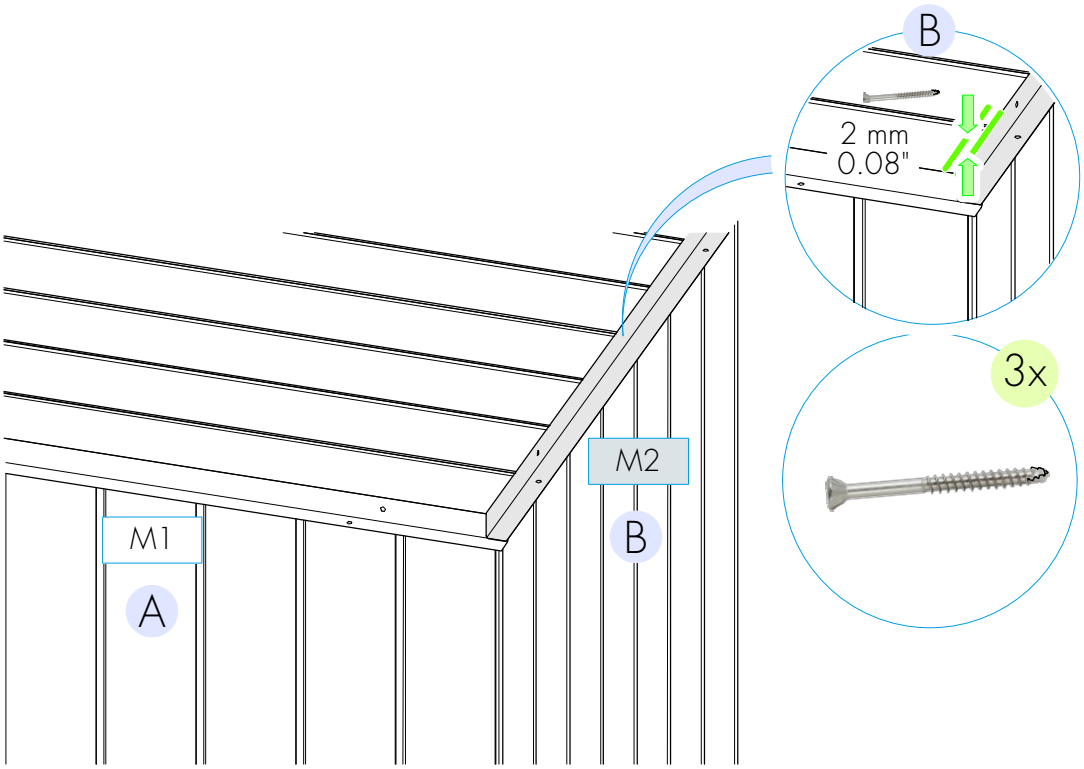

26 8.16. Cabin Body – fitting the cover strips

A	4x	= MP440210
B	3x	= MP440210
C	4x	= MP440210
D	3x	= MP440210

1. Screw all cover strips M1–M4 into the cabin ceiling from below (A–D).

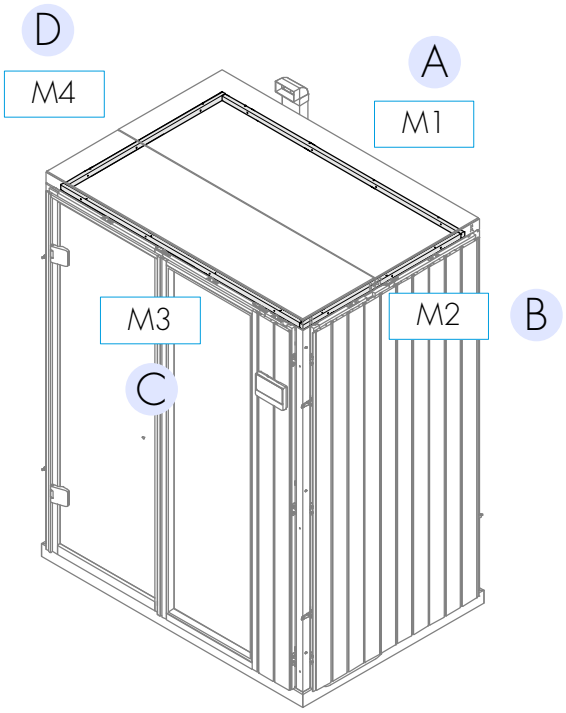

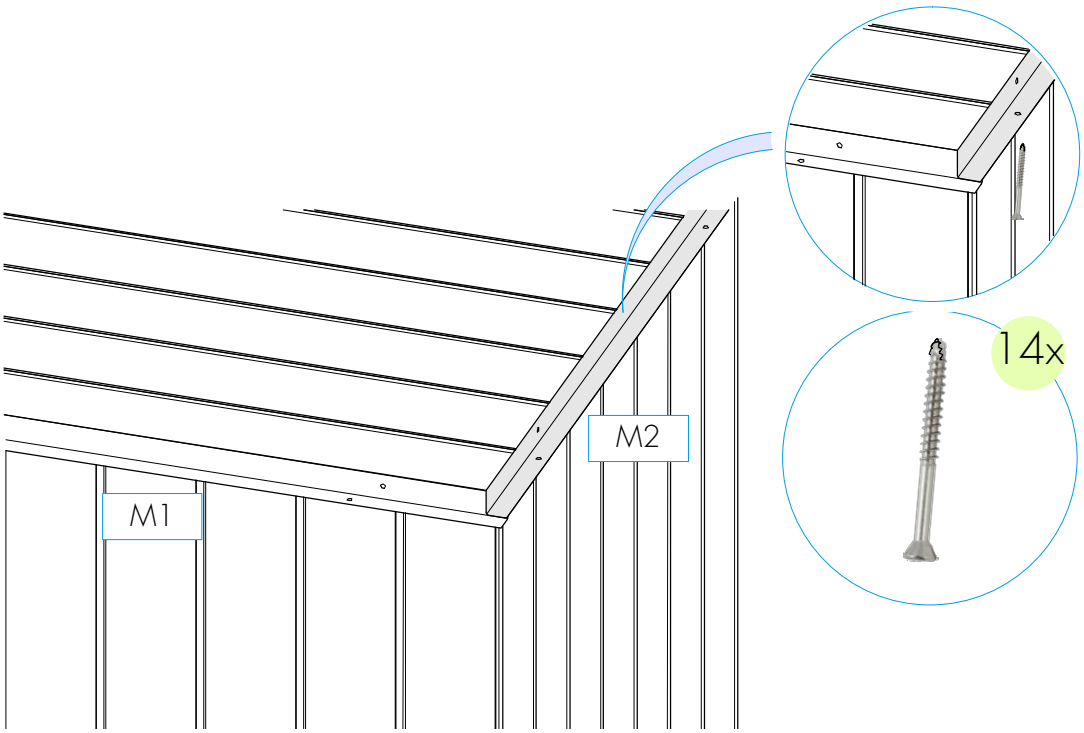

27

8.17. Sauna heater – installation

1. Attach mounting bracket (A) to the sauna heater with two screws.
2. Place the sauna heater at a distance of 1.57"/40 mm from the wall element (B).
3. Move the mounting holes on the mounting bracket over to the wall element (C).

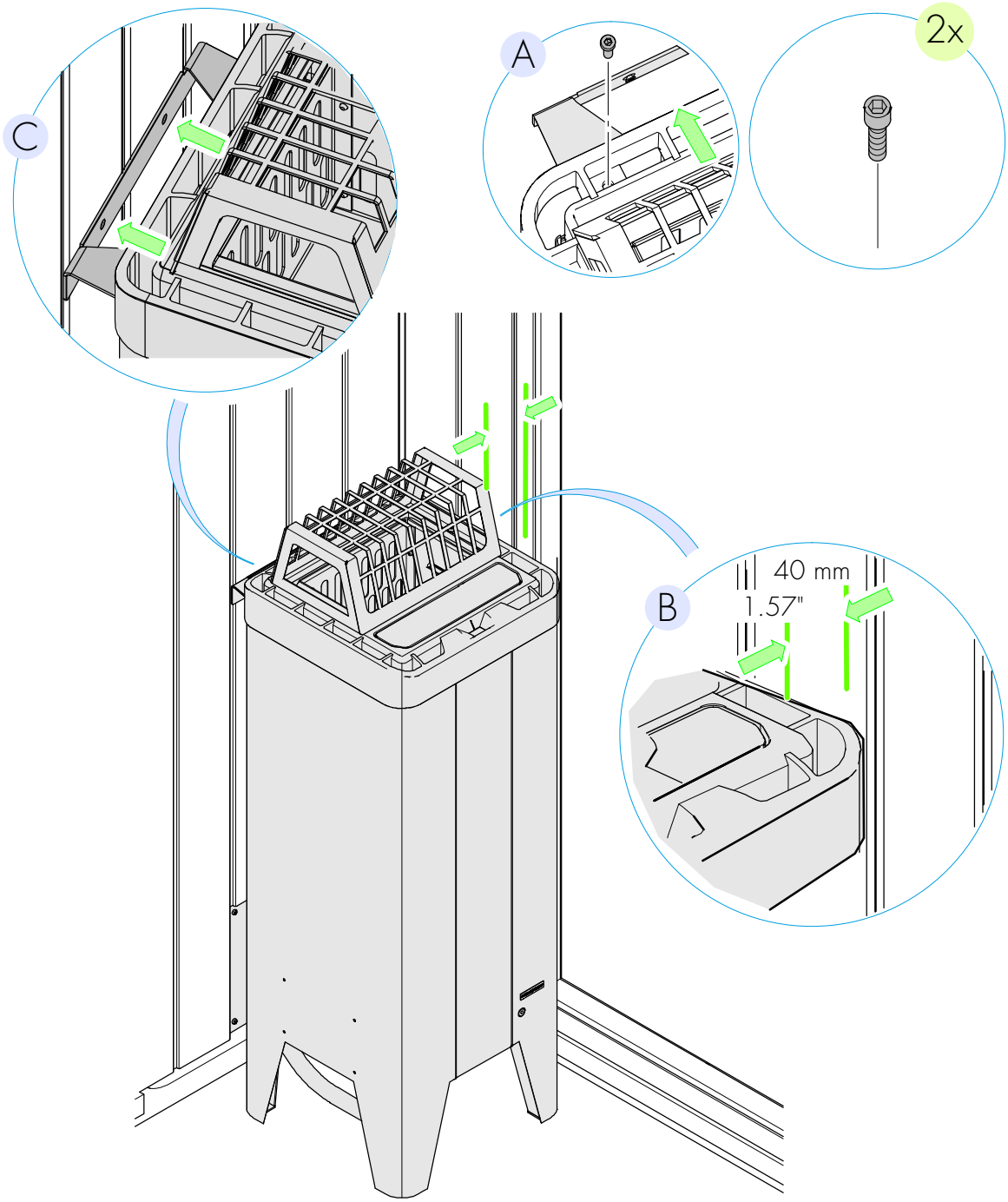

28 8.17. Sauna heater – installation

1. Warning sign: Two metal signs are included in the installation instructions supplied with every sauna heater. Attach the CAUTION sign (A) to the inside wall of the sauna cabin directly above the sauna heater where it is visible to sauna visitors.
2. Using two screws, screw the mounting bracket into the indicated position on the cabin wall (B).

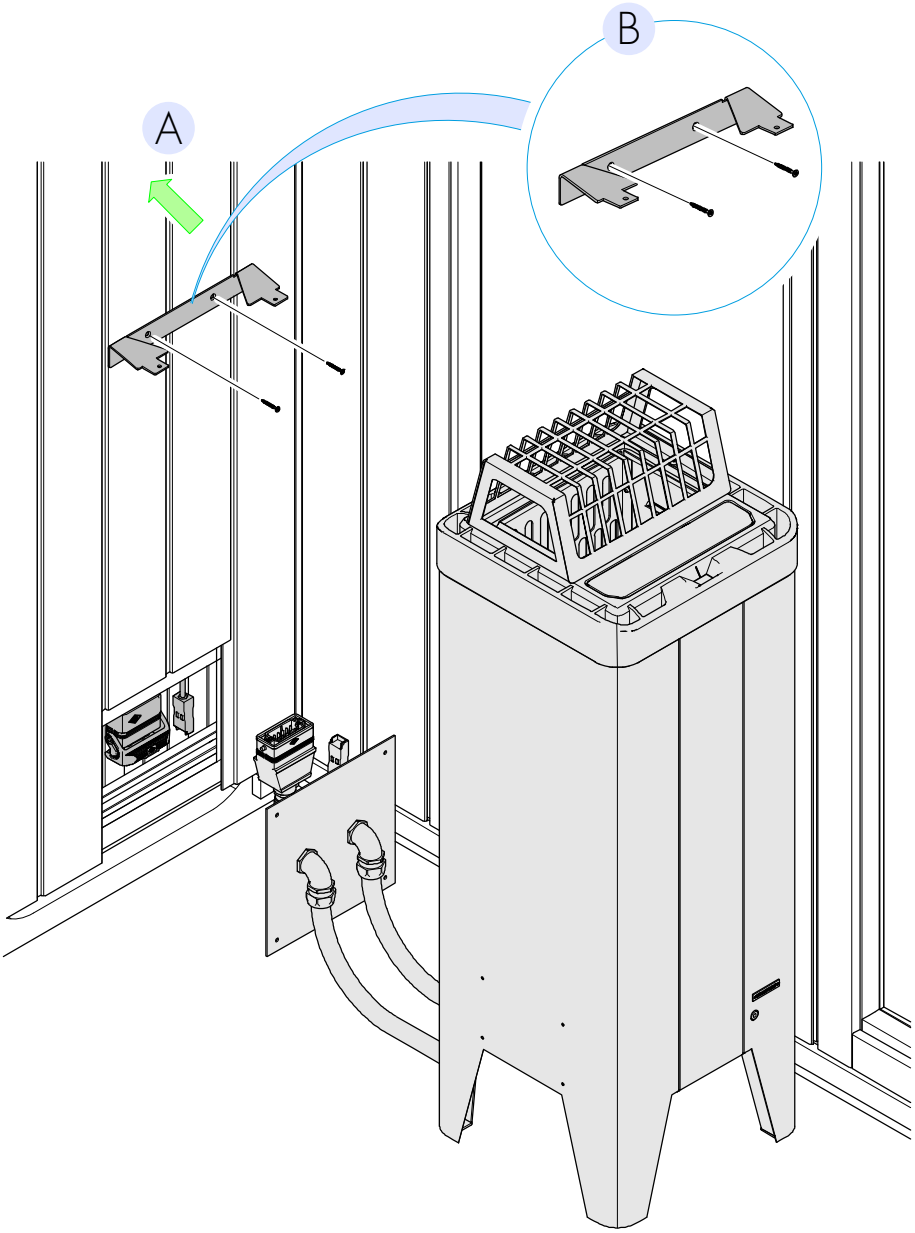

29 8.17. Sauna heater – installation

1. Plug together 1x connector with retaining brackets (A).
2. Plug together 1x RJ connector (B).
3. Stow away all cables and connectors in the cutout of the wall element.

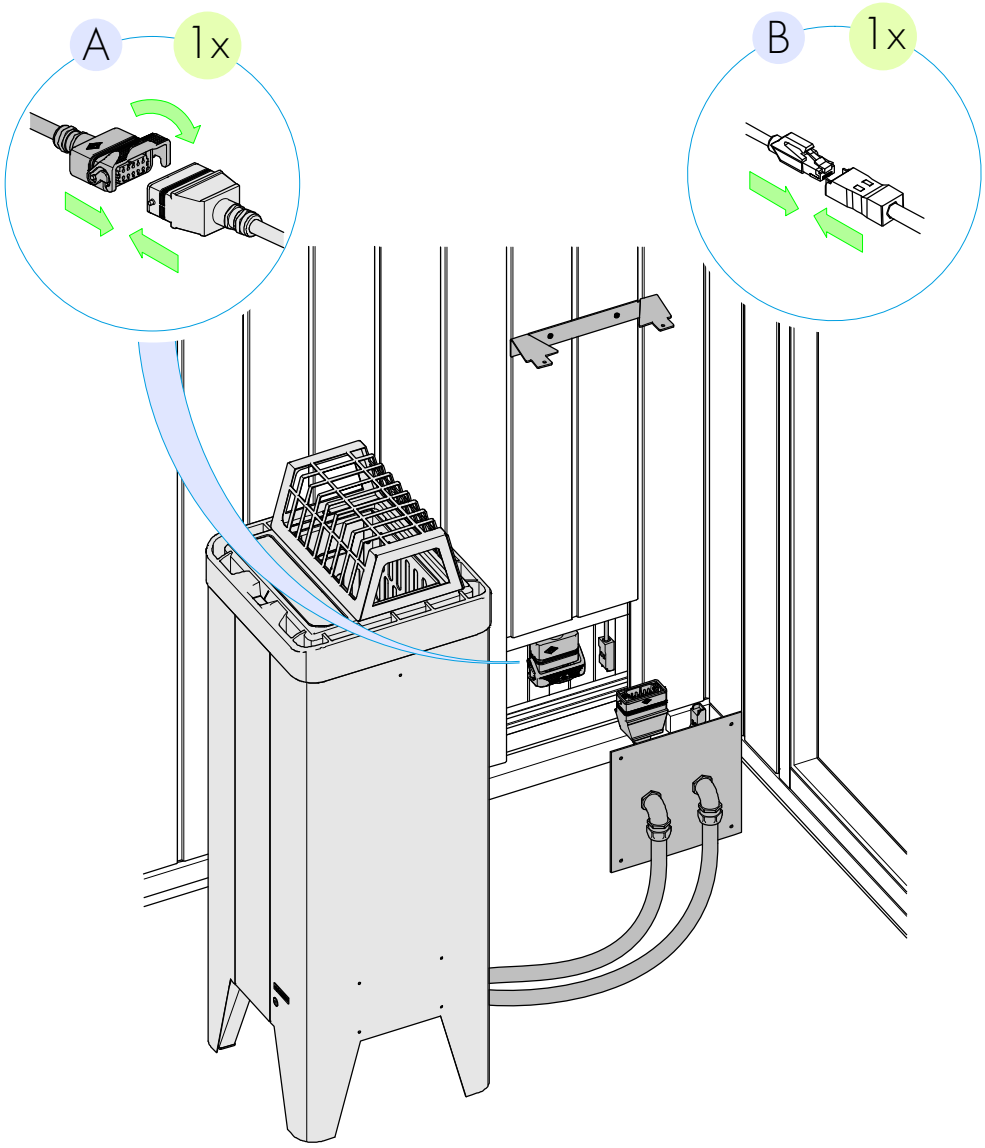

ATTENTION

Risk of damage to property.
Electrical cables can get damaged.
Do not bend electrical cables. Lay electrical cables with a loop in the cutout on the wall element.

30

8.17. Sauna heater – installation

A	4x	= F0100030409

1. Using four screws, screw the sheet cover into the cutout on the wall element (A).

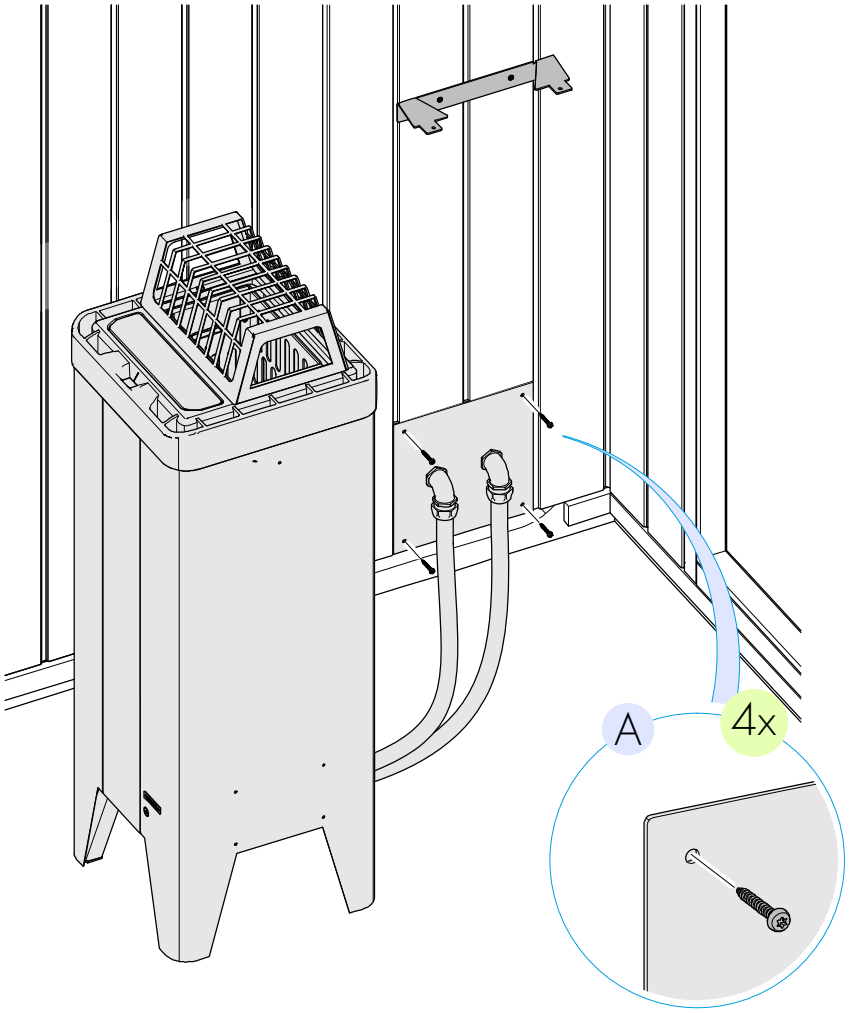

31

8.17. Sauna heater – installation

1. Holding it by its main body, carry the sauna heater and move it up to the mounting bracket on the wall element (A).
2. Fix the sauna heater to the mounting bracket using two screws (B).

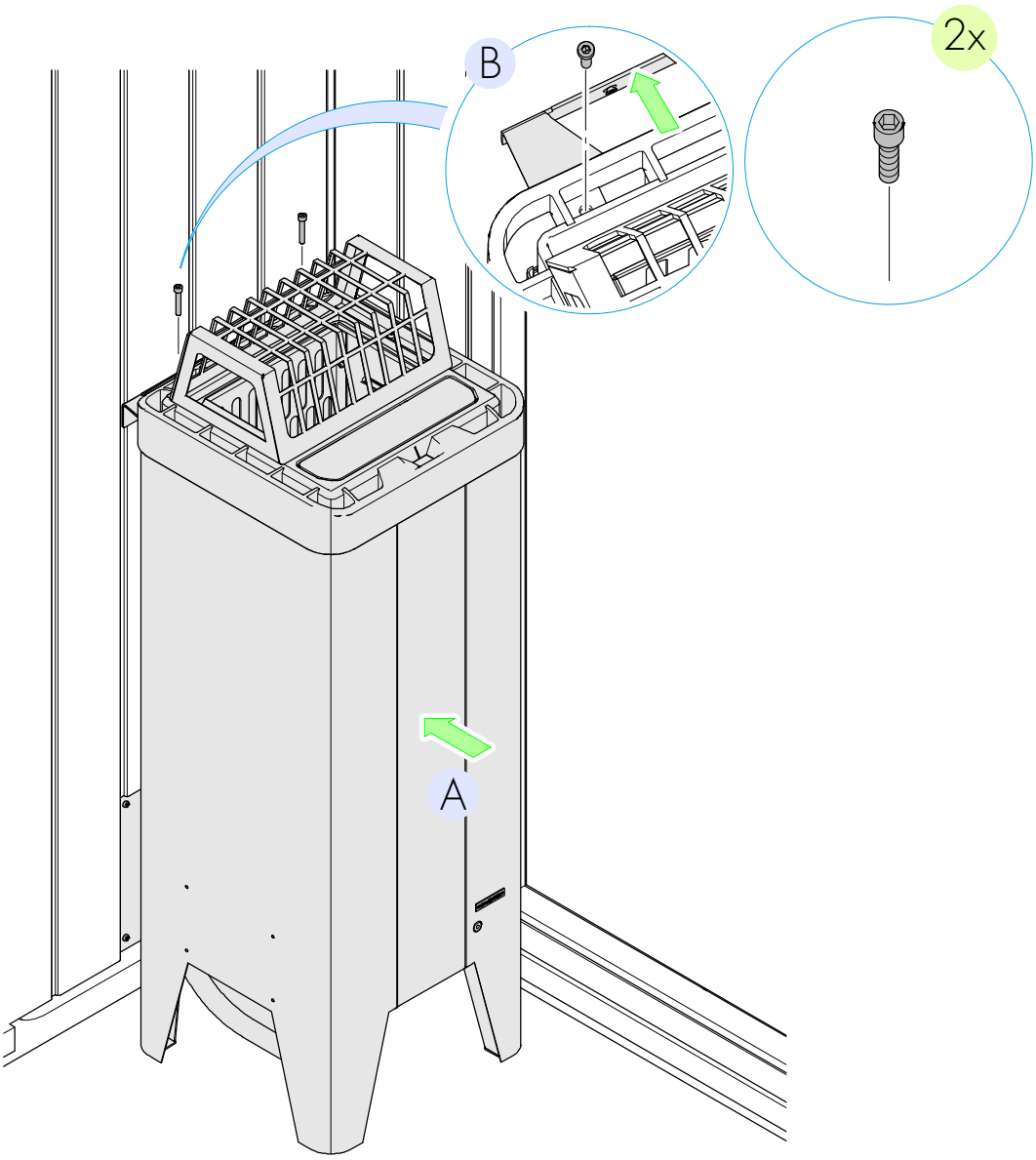

32 8.18. Sauna heater – installing the rail

1. Insert both rail holders into the mounting slot on the sauna heater (A).
2. Fix the rail to the sauna heater from above, using two screws.

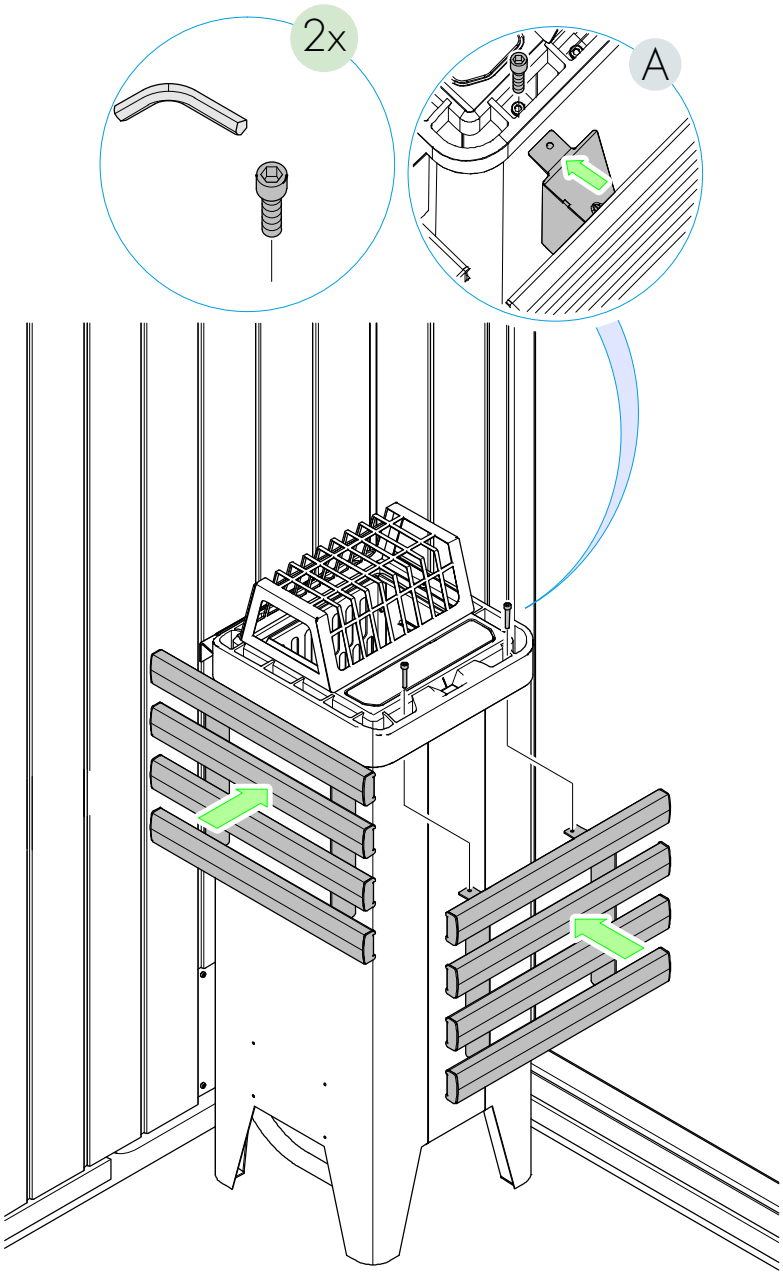

33

8.19. Sauna heater – filling with stones

1. Unscrew the two screws on the protective grille (A). Remove the protective grille.
2. There should be approx. 31 lbs (14 kg) of stones (B) in the stone basket. Put large stones at the bottom, small stones at the top. There may be a few stones left over.
3. Re-attach protective grille (A) with two screws.

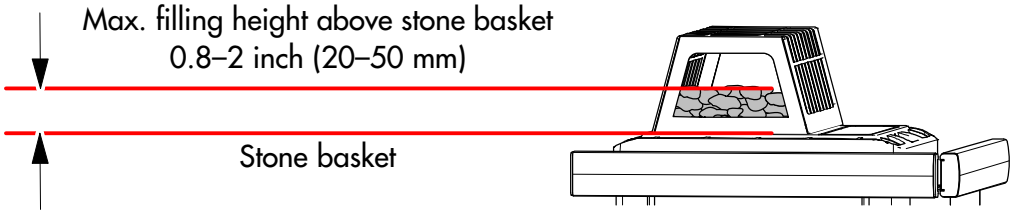

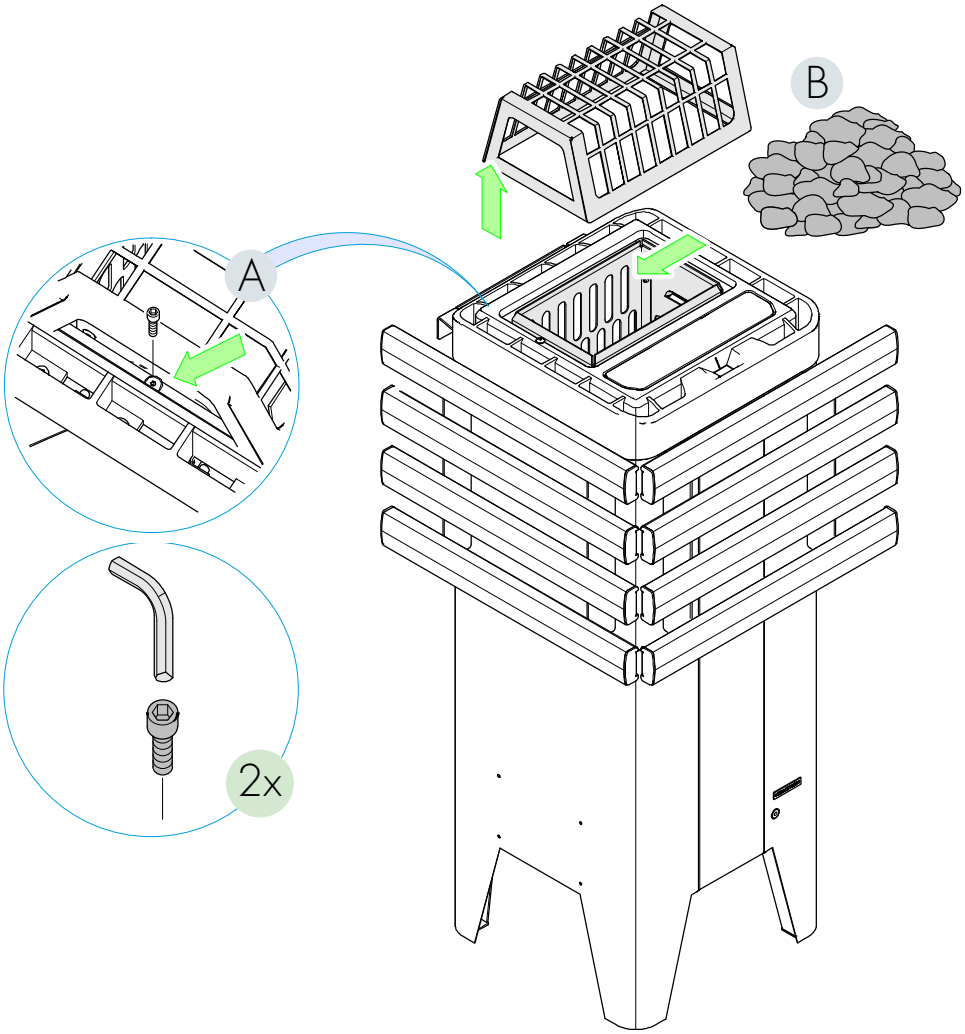

34 8.20. Cabin Body – fitting the exterior panel

1. Notice: Exterior panels are labeled with the same number as the wall sections on which they are to be installed.
2. Hang the exterior panel from above on the corner of the cabin in the three anchor fixtures and slide left so the tongue slots into the wall board.
3. Place exterior panels down on all four corners of the cabin as far into the anchor fixtures as they will go.

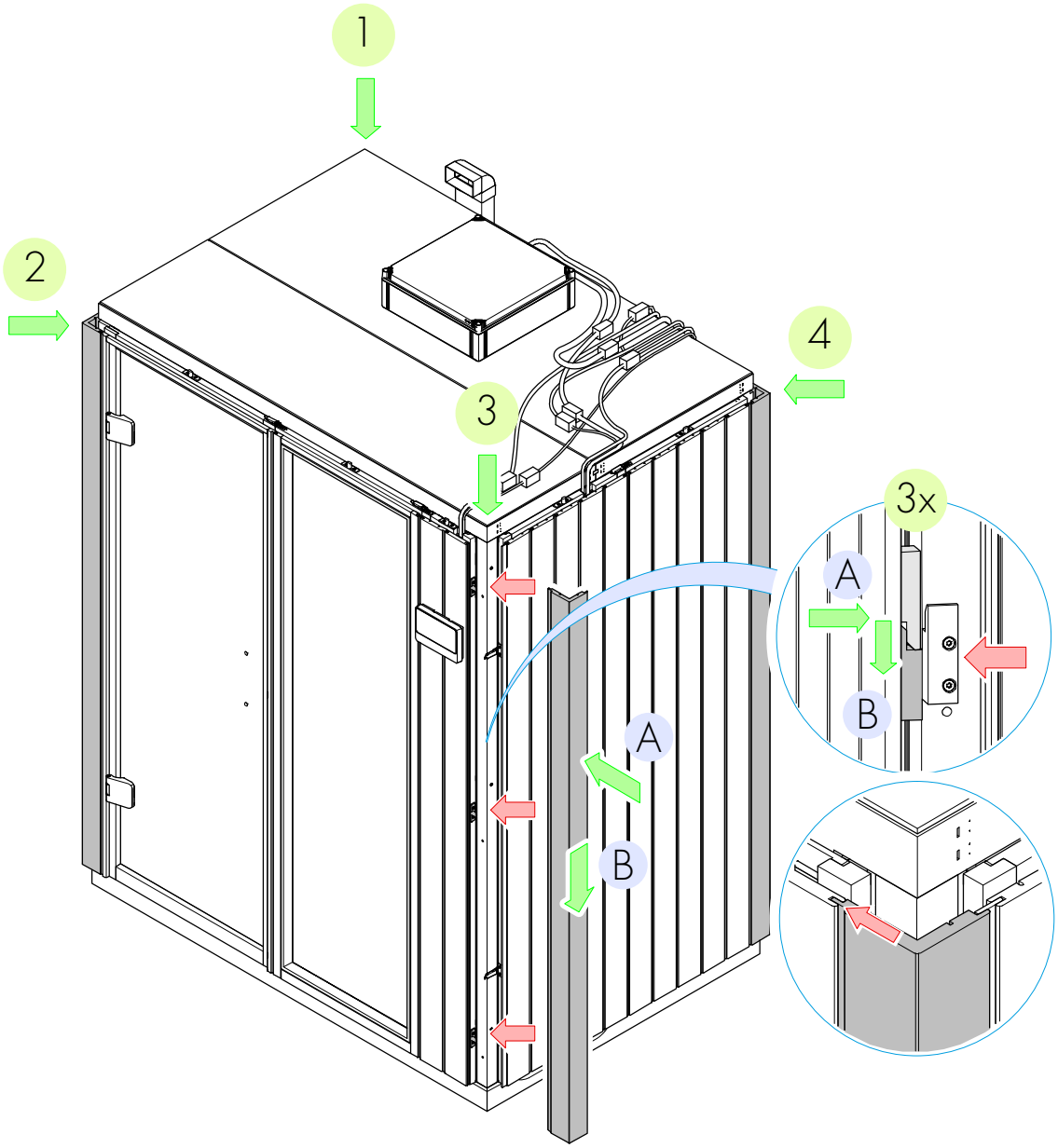

35 8.21. Cabin Body – fitting the door handle

Outside

1. Screw in both threaded rods (A) into the aluminum handle (B) by making 4-5 turns.
2. Push the pre-assembled aluminum handle (B) into the holes (C) on the glass door.

Inside

3. Push the silicone sleeves (D) onto the threaded rods.
4. From inside the cabin, attach the wooden handle (E) to the threaded rods.
5. Notice: Do not turn the sleeve nut over. Position the slit in the sleeve nut so it is horizontal (F).
6. Screw the sleeve nut (F) tight onto the threaded rods.

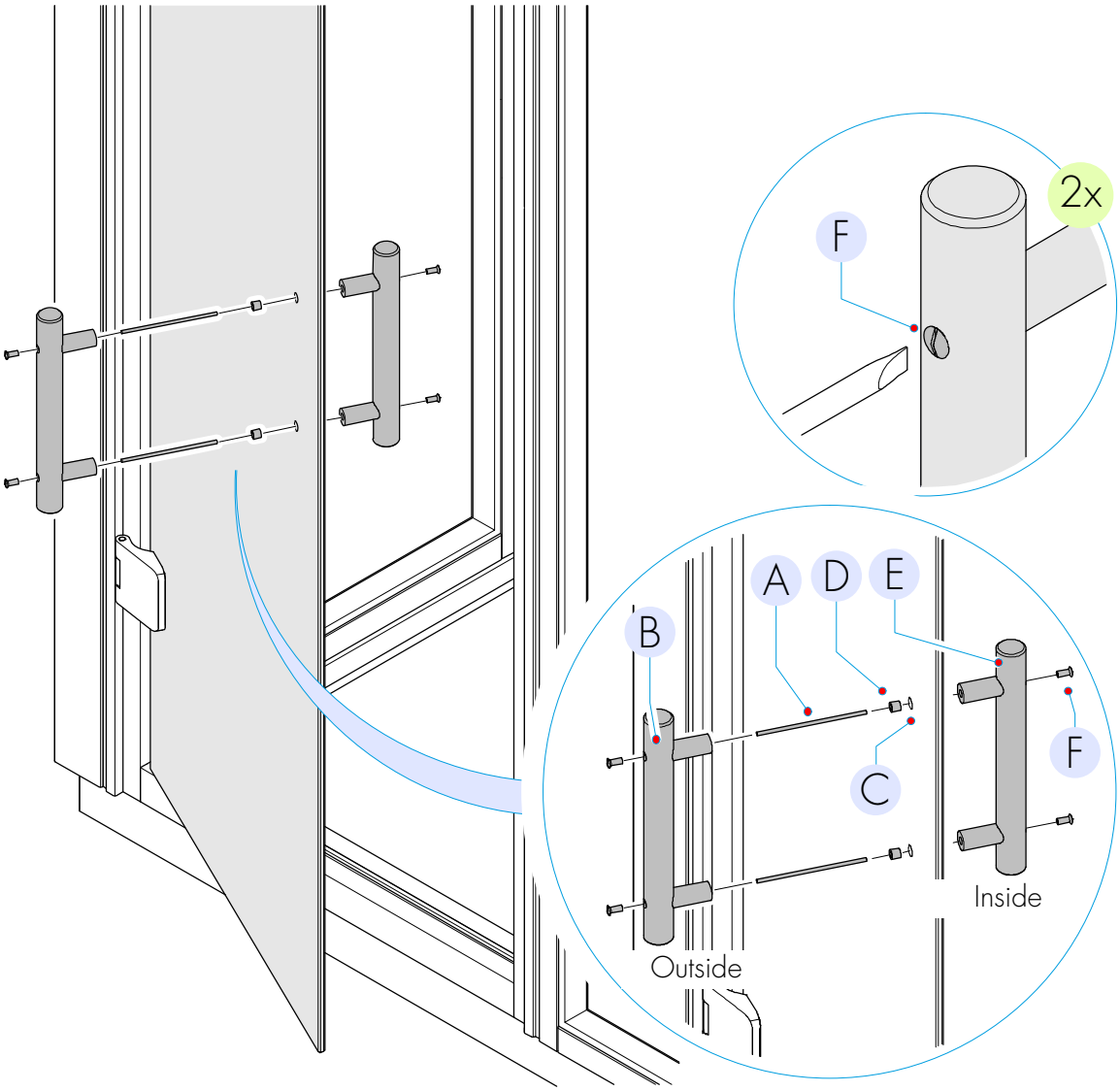

36	8.22. Lounger setup – fitting the backrest	C 2x = MP440054

1. Insert cables of the SUNSET connector (A) into the SUNSET socket (B) of the backrest.
2. Screw the backrest into the cabin wall (C) using two screws.
3. Push the cable of the connector back into the hole on the cabin wall.

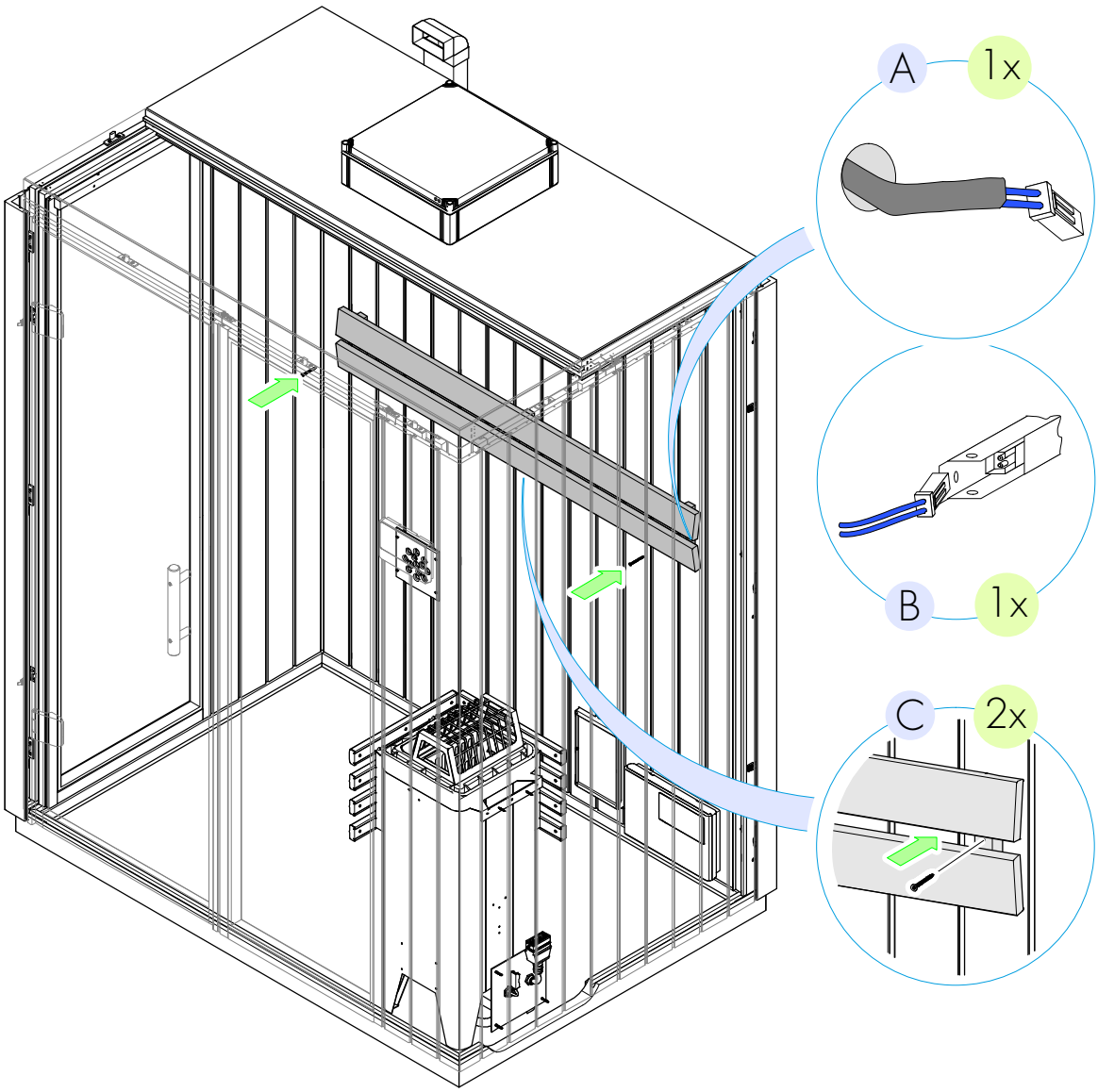

ATTENTION

Risk of damage to property.
Connector or electrical cables can get damaged.
Take care screwing the backrest onto the cabin wall. Make sure that neither the connector nor the electrical cables get damaged in the process.

37	8.23.	Lounger setup – fitting support strips	A	7x	= MP440054

1. Fasten two support strips to the wall element on the left and right in the corresponding holes (A).

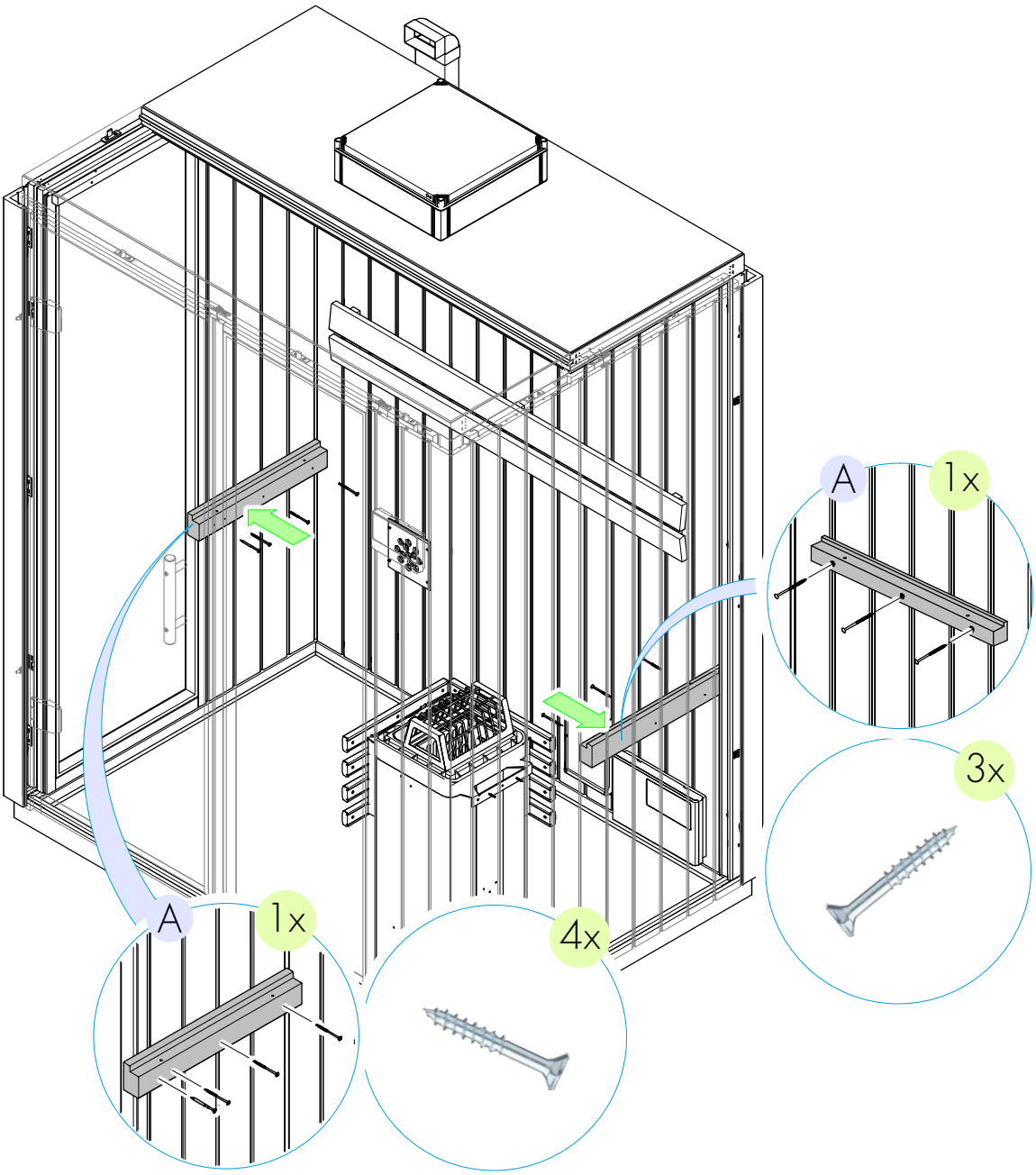

38	8.24.	Lounger setup – fitting the lower large lounger	A 4x = MP440054

1. Hang the lounger in the support strips on the left and right cabin walls (A).
2. Secure the lounger to the support strips using four screws.

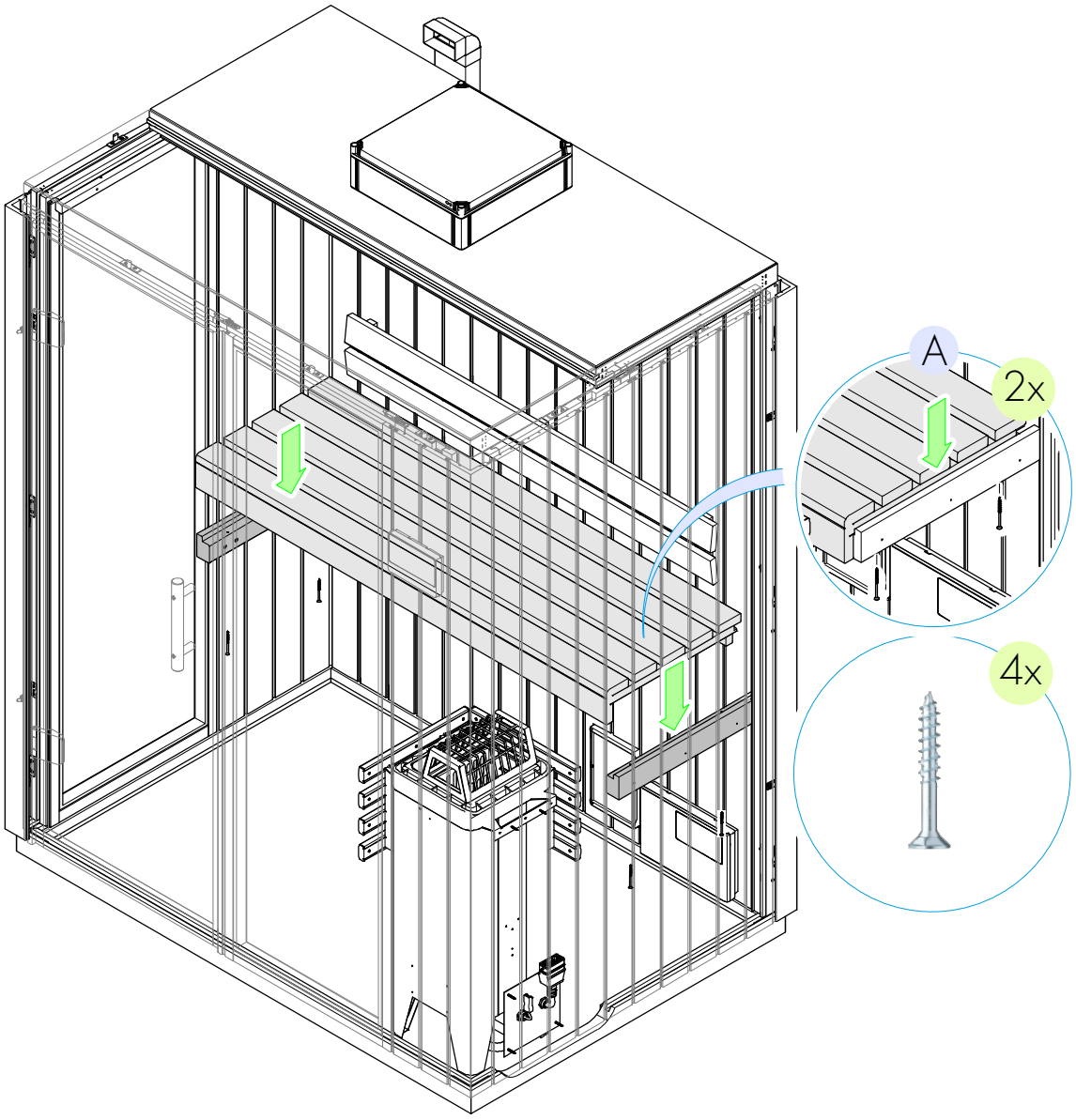

KOHLER

39	8.25.	Lounger setup – fitting the lounger panel to the lower large lounger

A	3x	= MP440054

1. Secure the lounger panel to the lounger using four screws (A).

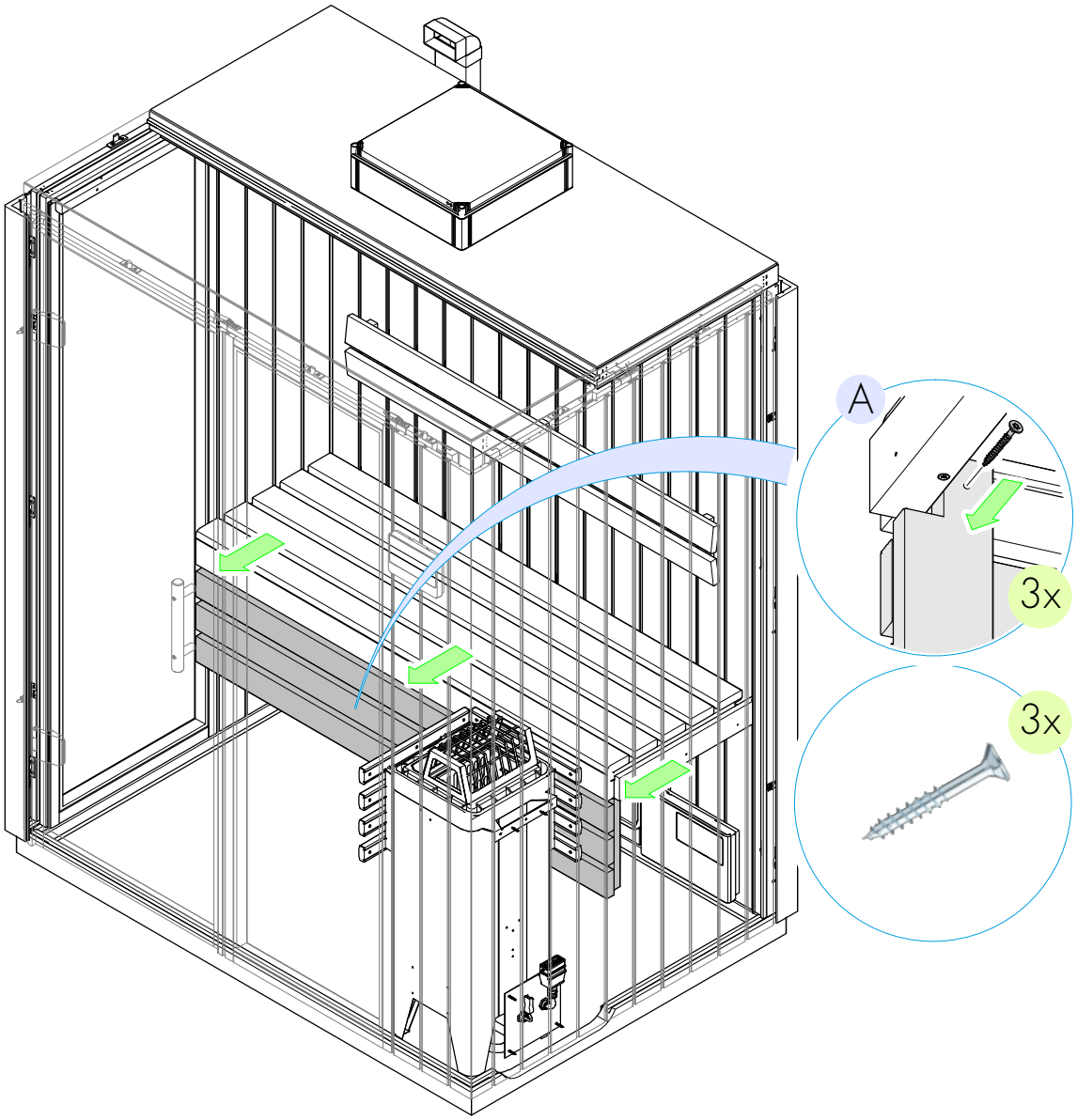

40 8.26. Cabin body – overview of the roof panel

1. For sauna cabin 38440-0FNC-SPS, 38440-1FNC-SPS with tongue-groove board exterior cladding, the roof panel is installed. See step 41.
2. For sauna cabin 39963-0FNC-CGS, 39963-1FNC-CGS with paneled exterior cladding, no roof panel is installed. Continue with step 42.

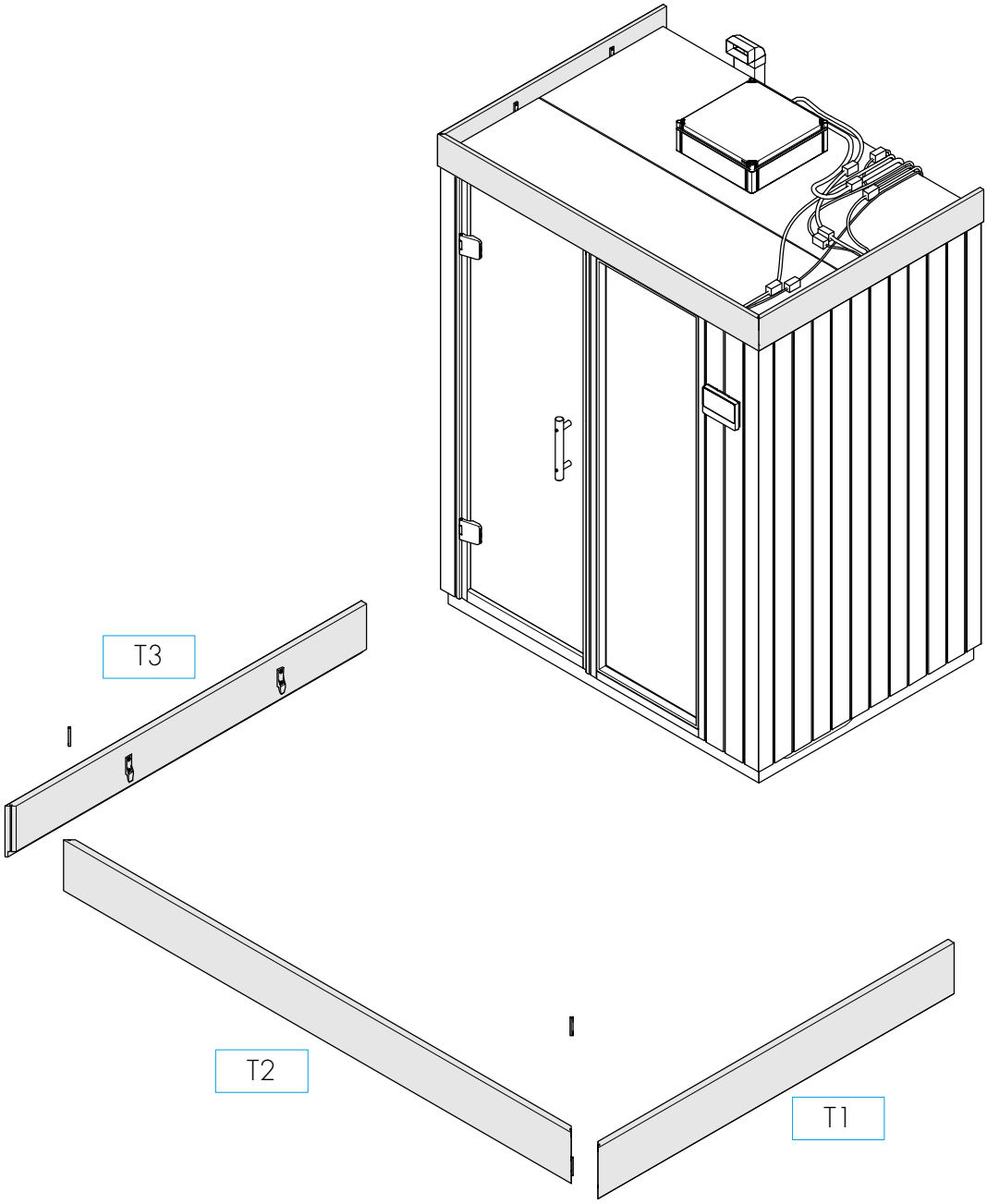

41 8.27. Cabin body – fitting the roof panel

1. Assemble the roof panels (T1, T2, T3) on the floor (A, B, C) beforehand.
2. Push the dovetail tongue from below into the groove of the roof panels (T1, T2, T3) (A).
3. Hang the assembled roof panels (T1, T2, T3) two at a time in the anchor fixture (D) on the cabin roof.

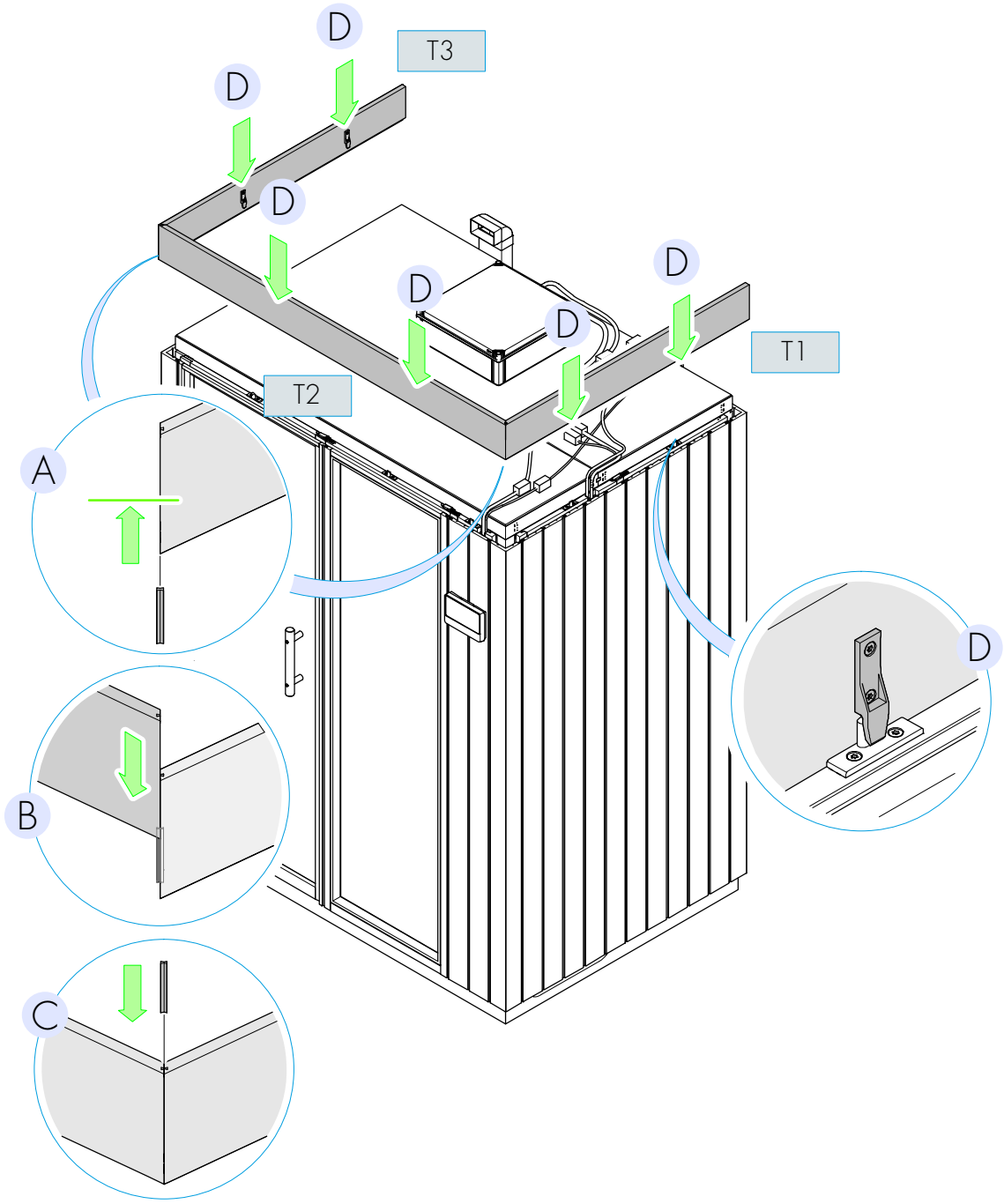

42 8.28. Electrical connection

1. Plug the electrical connection cable into the electrical outlet on the wall (A).
2. Warning sign: Two metal signs are included in the installation instructions supplied with every sauna heater. Attach the WARNING sign (B) above the control unit on the sauna cabin.

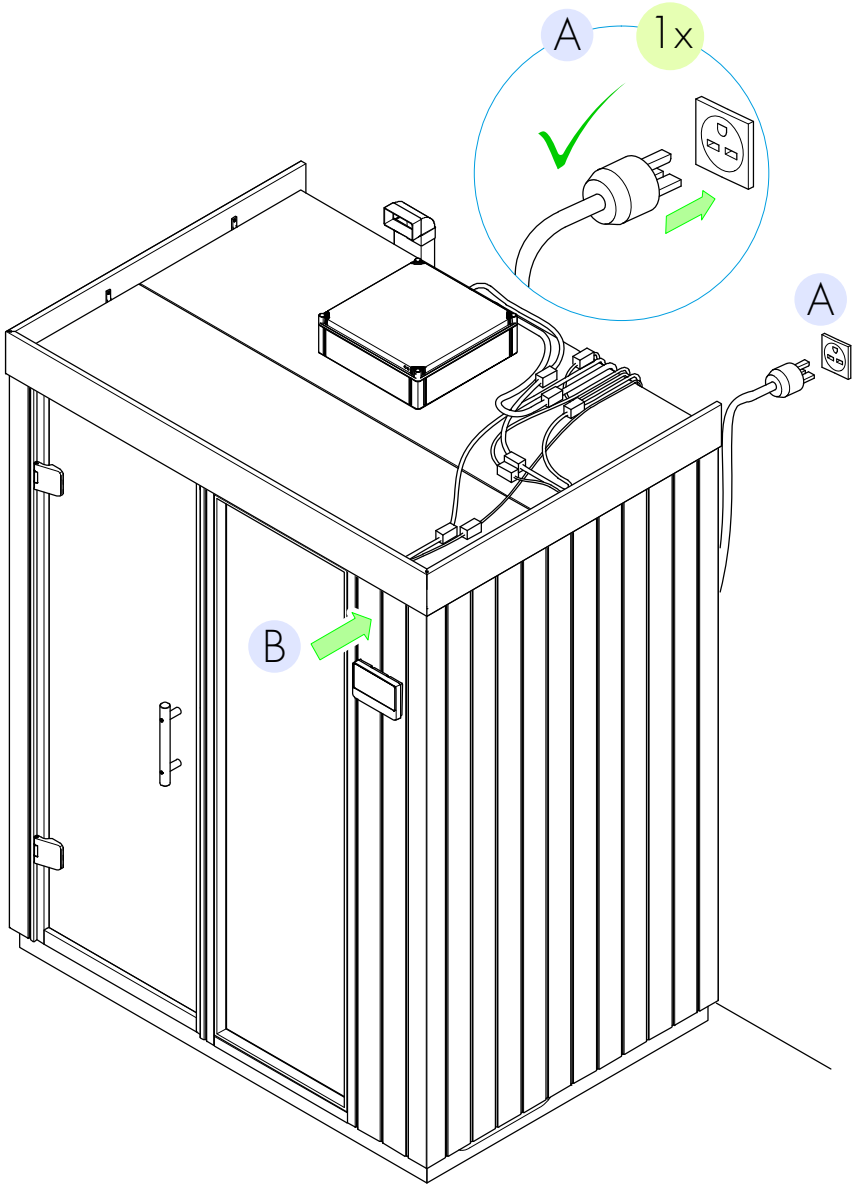

Installation option:
Option – Cabin body – cabin roof – cable covering
➧ see sheet 42.1

42.1 8.29. Option – Cabin body – cabin roof – cable covering

Installation option:
A 15 = MP440061
B = 39193-NA

1. Position the electrical cables beside the frame timbers.
2. Screw the frame timbers onto the cabin roof (A).
3. Lay cable coverings (B) flat on the cabin roof.

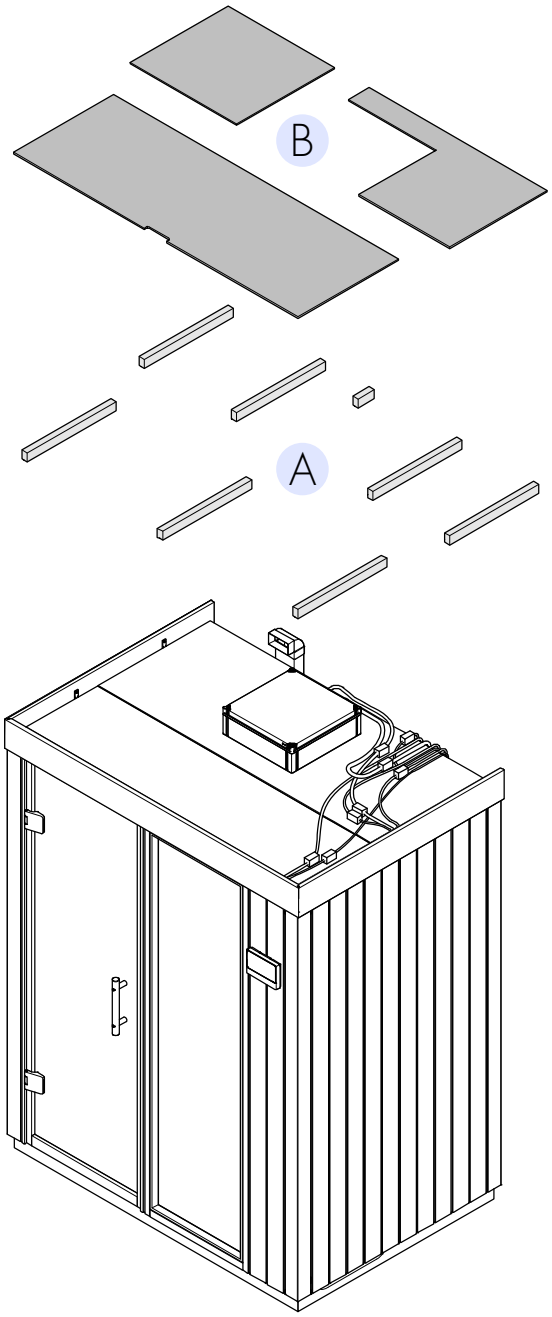

NOTICE Position the electrical cables between the frame timbers of the cover plates.

43

8.30. Instruments – Thermometers, sand timer

1. Hang thermometer (A) on the two screws in the wall element.
2. Screw the sand timer (B) onto the sauna wall using the corresponding holes.

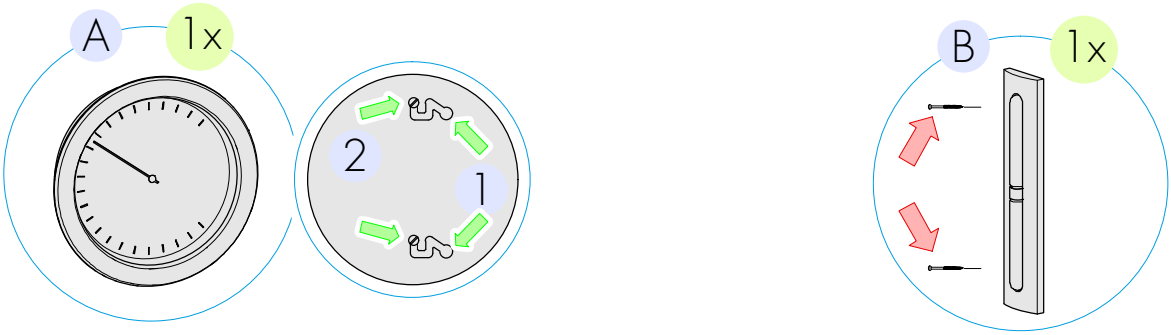

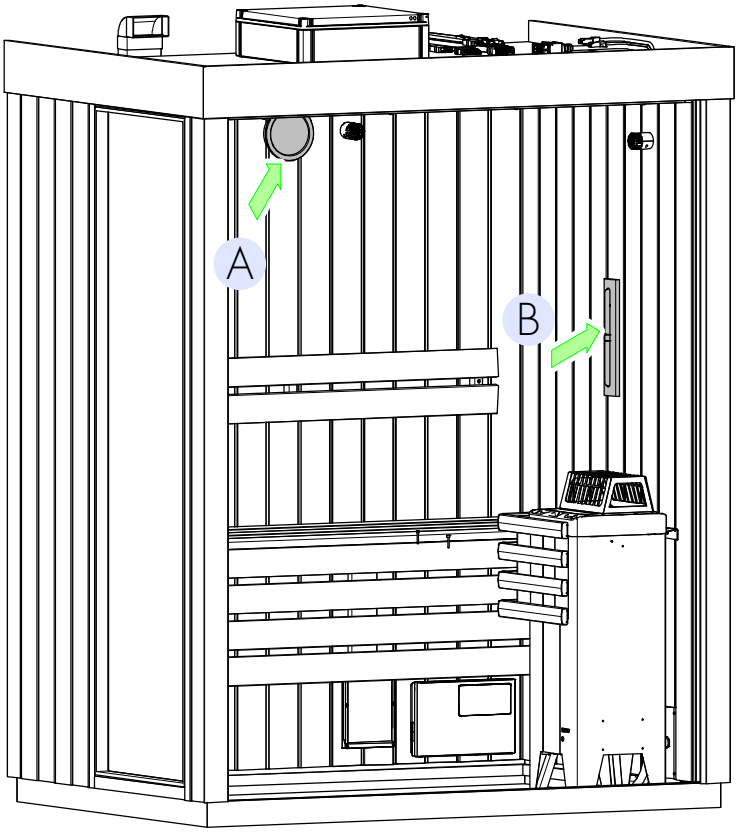

44 8.31. Lounger setup – stool

1. Place the stool in the sauna cabin, under the lounger.

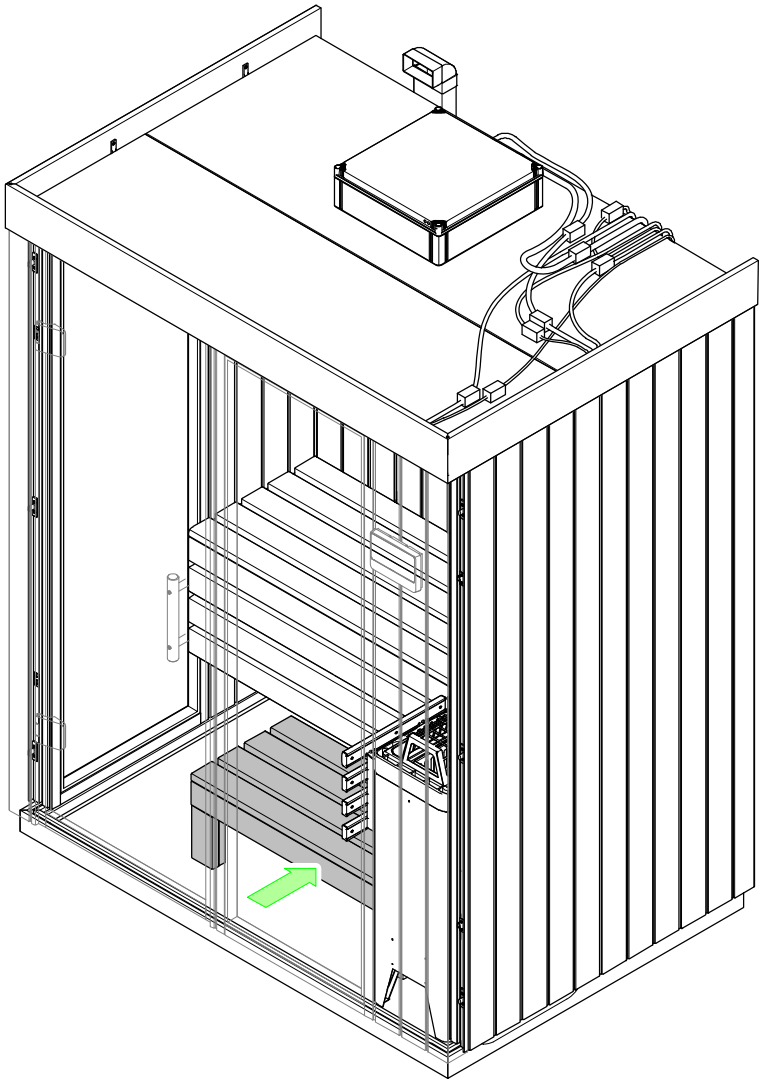

NOTICE The installation is complete.

45

8.32. Connectors

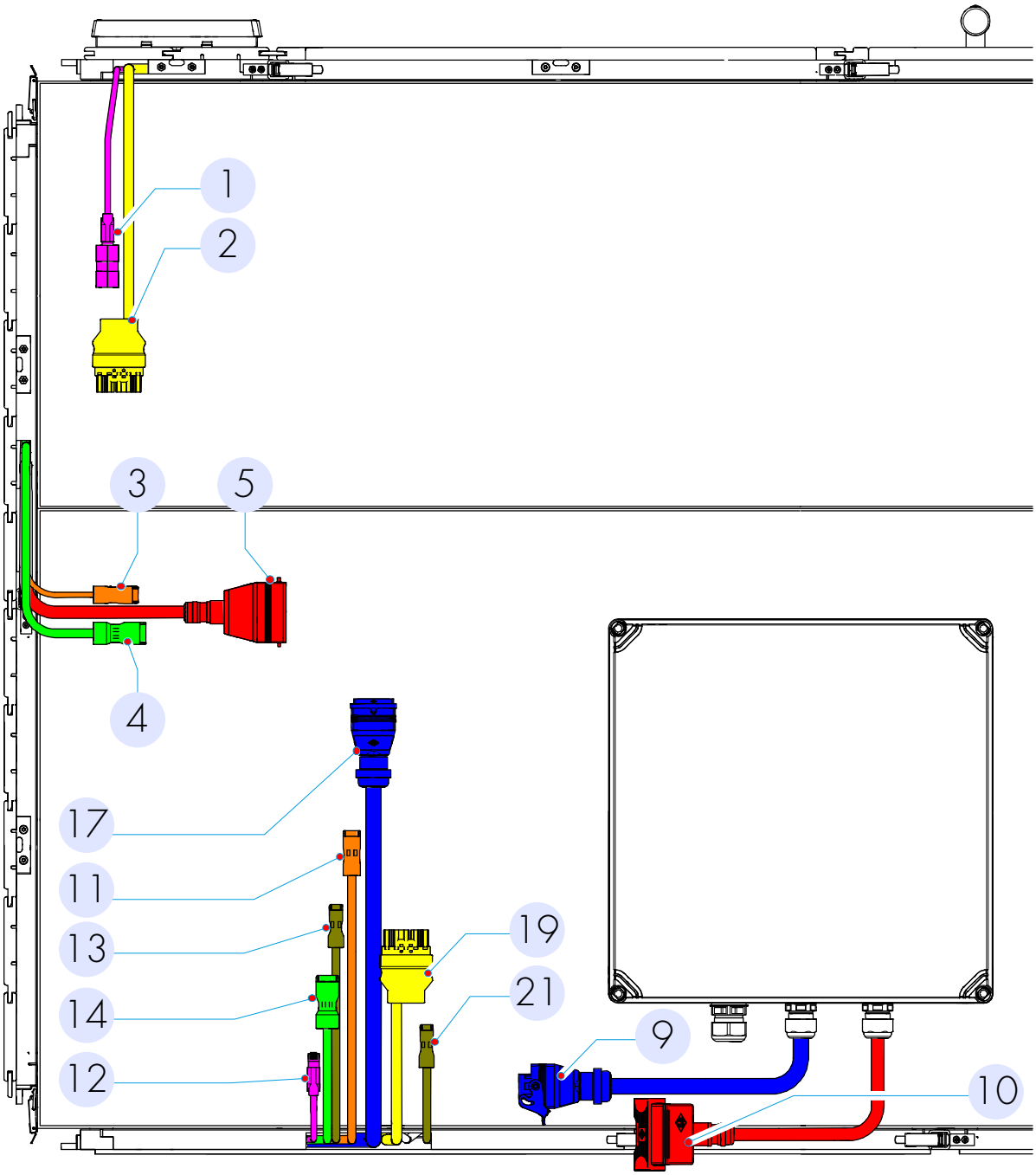

8.33. Cable list

Item	Article number	Designation Name	Connection 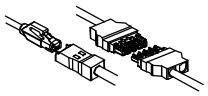
1	30601809	Sensor 1 (heater) - connect on sensor 1	1 <-> 12
2	30601804	Light/main switch_ on control 21T	2 <-> 19
3	30601806	Data cable_ on control 21 T	3 <-> 11
4	30601823	Heat limiter _ connect cable (in wall)	4 <-> 14
5	30601826	240V heater supply _ connect cable (in wall)	5 <-> 10
9	30601831	junction connection _ on junction box	9 <-> 17
10	30601824	240V heater supply _ junction box	10 <-> 5
11	30601807	Data cable_ on power unit	11 <-> 3
12	30601808	Sensor 1 (heater) _ on power unit	12 <-> 1
13	30601810	Sensor 2 (at bench) - on power unit	13 <-> 21
14	30601821	Heat limiter _ on power unit	14 <-> 4
17	30601830	junction connection _ on power unit	17 <-> 9
19	30601805	Light/main switch_ on power unit	19 <-> 2
21	30601811	Sensor 2 (at bench) - connect on sensor 2	21 <-> 13

NOTES

NOTES

NOTES

USA/Canada: 1-800-4KOHLER (1-800-456-4537)
Mexico: 001-800-456-4537
kohler.com

THE BOLD LOOK OF KOHLER®

©2025 Kohler Co.
1657796-2-**A**

08.25 / 50001397 / Reserve technical changes

Instructions de montage

C1 INDOOR Sauna
38440-0FNC-SPS
38440-1FNC-SPS
39963-0FNC-CGS
39963-1FNC-CGS

KOHLER®

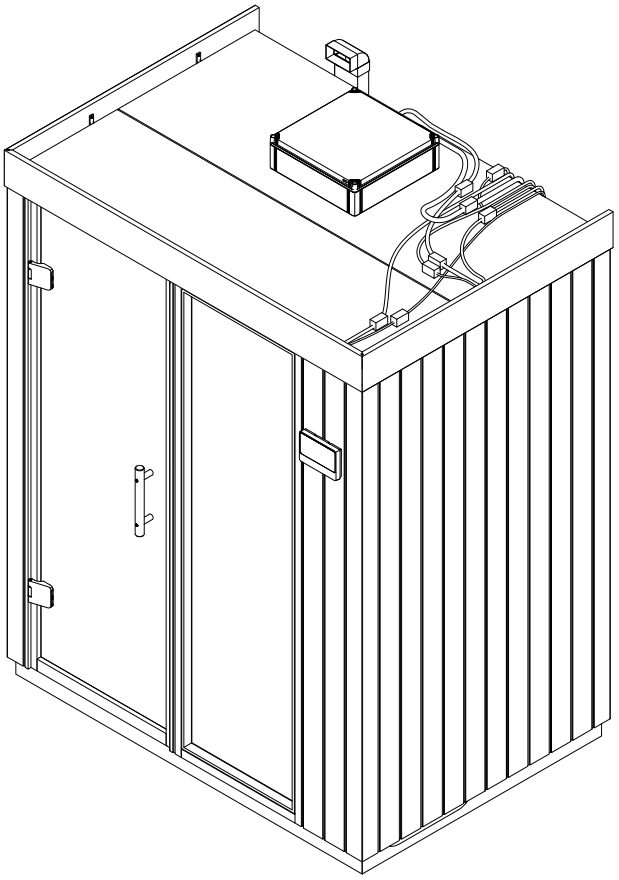

38440-0FNC-SPS
38440-1FNC-SPS

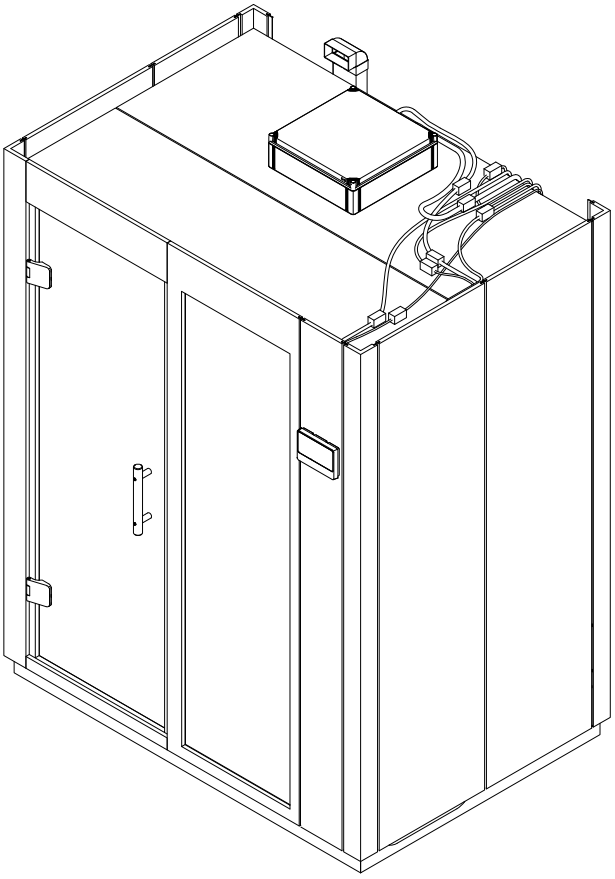

39963-0FNC-CGS
39963-1FNC-CGS