MITSUBISHI ELECTRIC

SPLIT-TYPE AIR CONDITIONERS

Revision A:
• Some descriptions have been changed.
OBH957 is void.

INDOOR UNIT

No. OBH957
REVISED EDITION-A

SERVICE MANUAL

Models

MLZ-KX09NL - U1
MLZ-KX12NL - U1
MLZ-KX18NL - U1

Outdoor unit service manual
MXZ-D•NL Series (OBH949)
MXZ-SM•NL Series
MXZ-SM•NLHZ Series
SUZ-AA•NL Series
SUZ-AA•NLHZ Series

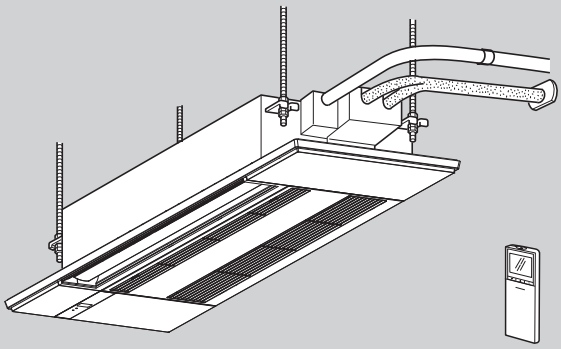

CONTENTS

1. TECHNICAL CHANGES 2
2. SAFETY PRECAUTION 3
3. PART NAMES AND FUNCTIONS 8
4. SPECIFICATION 9
5. OUTLINES AND DIMENSIONS 12
6. WIRING DIAGRAM 13
7. REFRIGERANT SYSTEM DIAGRAM 14
8. SERVICE FUNCTIONS 15
9. MICROPROCESSOR CONTROL 20
10. TROUBLESHOOTING 29
11. DISASSEMBLY INSTRUCTIONS 48

PARTS CATALOG (OBB957)

Use the specified refrigerant only

Never use any refrigerant other than that specified.

Doing so may cause a burst, an explosion, or fire when the unit is being used, serviced, or disposed of.
Correct refrigerant is specified in the manuals and on the spec labels provided with our products.
We will not be held responsible for mechanical failure, system malfunction, unit breakdown or accidents caused by failure to follow the instructions.

<Preparation before the repair service>

- Prepare the proper tools.
- Prepare the proper protectors.
- Provide adequate ventilation.
- After stopping the operation of the air conditioner, turn off the power-supply breaker and pull the power plug.
- Discharge the capacitor before the work involving the electric parts.

<Precautions during the repair service>

- Do not perform the work involving the electric parts with wet hands.
- Do not pour water into the electric parts.
- Do not touch the refrigerant.
- Do not touch the hot or cold areas in the refrigeration cycle.
- When the repair or the inspection of the circuit needs to be done without turning off the power, exercise great caution not to touch the live parts.

⚠ WARNING

- **When the refrigerant circuit has a leak, do not execute pump down with the compressor.**
- **When pumping down the refrigerant, stop the compressor before disconnecting the refrigerant pipes. The compressor may burst if air etc. get into it.**
- **When opening or closing the valve below freezing temperatures, refrigerant may spurt out from the gap between the valve stem and the valve body, resulting in injuries.**

Revision A:

• Some descriptions have been changed.

1 TECHNICAL CHANGES

MLZ-KX09NL - U1
MLZ-KX12NL - U1
MLZ-KX18NL - U1

1. New model

2 SAFETY PRECAUTION

MEANINGS OF SYMBOLS DISPLAYED ON THE UNIT

Refrigerant Safety Group A2L	**WARNING** (Risk of fire)	This unit uses a flammable refrigerant. If the refrigerant leaks and comes in contact with fire or a heating part, it will create a harmful gas and there is a risk of fire.
	Read the OPERATION MANUAL carefully before operation.	
	Service personnel are required to carefully read the OPERATION MANUAL and INSTALLATION MANUAL before operation.	
	Further information is available in the OPERATION MANUAL, INSTALLATION MANUAL, and the like.	

2-1. ALWAYS OBSERVE FOR SAFETY

Before obtaining access to terminal, all supply circuits must be disconnected.

2-2. CAUTIONS RELATED TO NEW REFRIGERANT

Cautions for units utilizing refrigerant R454B

Do not use the existing refrigerant piping.

The old refrigerant and lubricant in the existing piping contains a large amount of chlorine which may cause the lubricant deterioration of the new unit.

Make sure that the inside and outside of refrigerant piping is clean and it has no contaminants such as sulfur, oxides, dirt, shaving particles, etc., which are hazard to refrigerant cycle.
In addition, use pipes with specified thickness.

Contamination inside refrigerant piping can cause deterioration of refrigerant oil, etc.

Store the piping indoors, and keep both ends of the piping sealed until just before brazing.
(Leave elbow joints, etc. in their packaging.)

If dirt, dust or moisture enters into refrigerant cycle, that can cause deterioration of refrigerant oil or malfunction of compressor.

The refrigerant oil applied to flare and flange connections must be ester oil, ether oil or alkylbenzene oil in a small amount.

If large amount of mineral oil enters, that can cause deterioration of refrigerant oil, etc.

Charge refrigerant from liquid phase of gas cylinder.

If the refrigerant is charged from gas phase, composition change may occur in refrigerant and the efficiency will be lowered.

Ventilate the room if refrigerant leaks during operation. If refrigerant comes into contact with a flame, poisonous gases will be released.

Use a vacuum pump with a reverse flow check valve.

Vacuum pump oil may flow back into refrigerant cycle and that can cause deterioration of refrigerant oil, etc.

Use the following tools specifically designed for use with R454B refrigerant.

The following tools are necessary to use R454B refrigerant.

Tools for R454B	
Gauge manifold	Flare tool
Charge hose	Size adjustment gauge
Gas leak detector	Vacuum pump adaptor
Torque wrench	Electronic refrigerant charging scale

Handle tools with care.

If dirt, dust or moisture enters into refrigerant cycle, that can cause deterioration of refrigerant oil or malfunction of compressor.

Do not use a charging cylinder.

If a charging cylinder is used, the composition of refrigerant will change and the efficiency will be lowered.

Use the specified refrigerant only.

Never use any refrigerant other than that specified.
Doing so may cause a burst, an explosion, or fire when the unit is being used, serviced, or disposed of.
Correct refrigerant is specified on name plate of outdoor unit.
If other refrigerant (R22, etc.) is used, chlorine in refrigerant can cause deterioration of refrigerant oil, etc.
We will not be held responsible for mechanical failure, system malfunction, unit breakdown or accidents caused by failure to follow the instructions.

[1] Warning for service

(1) Do not alter the unit.
(2) For installation and relocation work, follow the instructions in the Installation Manual and use tools and pipe components specifically made for use with refrigerant specified in the outdoor unit installation manual.
(3) Ask a dealer or an authorized technician to install, relocate and repair the unit.
(4) This unit should be installed in rooms which exceed the floor space specified in outdoor unit installation manual. Refer to outdoor unit installation manual.
(5) Install the indoor unit at least 2.2 m above floor or grade level.
For appliances not accessible to the general public.
(6) Refrigerant pipes connection shall be accessible for maintenance purposes.
(7) If the air conditioner is installed in a small room or closed room, measures must be taken to prevent the refrigerant concentration in the room from exceeding the safety limit in the event of refrigerant leakage. Should the refrigerant leak and cause the concentration limit to be exceeded, hazards due to lack of oxygen in the room may result.
(8) Keep gas-burning appliances, electric heaters, and other fire sources (ignition sources) away from the location where installation, repair, and other air conditioner work will be performed.
If refrigerant comes into contact with a flame, poisonous gases will be released.
(9) When installing or relocating, or servicing the air conditioner, use only the specified refrigerant written on outdoor unit to charge the refrigerant lines.
Do not mix it with any other refrigerant and do not allow air to remain in the lines.
If air is mixed with the refrigerant, then it can be the cause of abnormal high pressure in the refrigerant line, and may result in an explosion and other hazards.
(10) After installation has been completed, check for refrigerant leaks. If refrigerant leaks into the room and comes into contact with the flame of a heater or portable cooking range, poisonous gases will be released.
(11) Do not use low temperature solder alloy in case of brazing the refrigerant pipes.
(12) When performing brazing work, be sure to ventilate the room sufficiently. Make sure that there are no hazardous or flammable materials nearby.
When performing the work in a closed room, small room, or similar location, make sure that there are no refrigerant leaks before performing the work.
If refrigerant leaks and accumulates, it may ignite or poisonous gases may be released.
(13) Do not install the unit in places where refrigerant may build-up or places with poor ventilation such as a semi-basement or a sunken place in outdoor: Refrigerant is heavier than air, and inclined to fall away from the leak source.
(14) Do not use means to accelerate the defrosting process or to clean, other than those recommended by the manufacturer.
(15) The appliance shall be stored in a room without continuously operating ignition sources (for example: open flames, an operating gas appliance or an operating electric heater).
(16) Do not pierce or burn.
(17) Be aware that refrigerants may not contain an odour.
(18) Pipe-work shall be protected from physical damage.
(19) The installation of pipe-work shall be kept to a minimum.
(20) Compliance with national gas regulations shall be observed.
(21) Keep any required ventilation openings clear of obstruction.
(22) Servicing shall be performed only as recommended by the manufacturer.
(23) The appliance shall be stored in a well-ventilated area where the room size corresponds to the room area as specified for operation.
(24) Maintenance, service and repair operations shall be performed by authorized technician with required qualification.
(25) Pipe-work including piping material, pipe routing, and installation shall include protection from physical damage in operation and service, and be in compliance with national and local codes and standards, such as ASHRAE 15, ASHRAE 15.2, IAPMO Uniform Mechanical Code, ICC International Mechanical Code, or CSA 852.
(26) All field joints shall be accessible for inspection prior to being covered or enclosed.

[2] Cautions for service

(1) Perform service after recovering the refrigerant left in unit completely.
(2) Do not release refrigerant in the air.
(3) After completing service, charge the cycle with specified amount of refrigerant.
(4) When performing service, install a filter drier simultaneously.
Be sure to use a filter drier for new refrigerant.

[3] Additional refrigerant charge

When charging directly from cylinder
(1) Check that cylinder for R454B available on the market is a syphon type.
(2) Charging should be performed with the cylinder of syphon stood vertically. (Refrigerant is charged from liquid phase.)

[4] Cautions for unit using R454B refrigerant

Basic work procedures are the same as those for conventional units using refrigerant R410A. However, pay careful attention to the following points.

(1) Information on servicing

(1-1) Checks to the area

Prior to beginning work on systems containing FLAMMABLE REFRIGERANTS, safety checks are necessary to ensure that the risk of ignition is minimized.

For repair to the REFRIGERATING SYSTEM, 1-2 to 1-6 shall be completed prior to conducting work on the system.

(1-2) Work Procedure

Work shall be undertaken under a controlled procedure so as to minimize the risk of a flammable gas or vapour being present while the work is being performed.

(1-3) General work area

All maintenance staff and others working in the local area shall be instructed on the nature of work being carried out.

Work in confined spaces shall be avoided.

(1-4) Checking for presence of refrigerant

The area shall be checked with an appropriate refrigerant detector prior to and during work, to ensure the technician is aware of potentially toxic or flammable atmospheres.

Ensure that the leak detection equipment being used is suitable for use with all applicablerefrigerants, i.e. non-sparking, adequately sealed or intrinsically safe.

(1-5) Presence of fire extinguisher

If any hot work is to be conducted on the refrigerating equipment or any associated parts, appropriate fire extinguishing equipment shall be available to hand.

Have a dry powder or CO_2 fire extinguisher adjacent to the charging area.

(1-6) No ignition sources

No person carrying out work in relation to a REFRIGERATING SYSTEM which involves exposing any pipe work shall use any sources of ignition in such a manner that it may lead to the risk of fire or explosion.

All possible ignition sources, including cigarette smoking, should be kept sufficiently far away from the site of installation, repairing, removing and disposal, during which refrigerant can possibly be released to the surrounding space.

Prior to work taking place, the area around the equipment is to be surveyed to make sure that there are no flammable hazards or ignition risks. “No Smoking” signs shall be displayed.

(1-7) Ventilated area

Ensure that the area is in the open or that it is adequately ventilated before breaking into the system or conducting any hot work. A degree of ventilation shall continue during the period that the work is carried out.

The ventilation should safely disperse any released refrigerant and preferably expel it externally into the atmosphere.

(1-8) Checks to the refrigerating equipment

Where electrical components are being changed, they shall be fit for the purpose and to the correct specification.

At all times the manufacturer’s maintenance and service guidelines shall be followed. If in doubt, consult the manufacturer’s technical department for assistance.

The following checks shall be applied to installations using FLAMMABLE REFRIGERANTS:

- the actual REFRIGERANT CHARGE is in accordance with the room size within which the refrigerant containing parts are installed.
- the ventilation machinery and outlets are operating adequately and are not obstructed.
- marking to the equipment continues to be visible and legible. Markings and signs that are illegible shall be corrected.
- refrigerating pipe or components are installed in a position where they are unlikely to be exposed to any substance which may corrode refrigerant containing components, unless the components are constructed of materials which are inherently resistant to being corroded or are suitably protected against being so corroded.

(1-9) Checks to electrical devices

Repair and maintenance to electrical components shall include initial safety checks and component inspection procedures. If a fault exists that could compromise safety, then no electrical supply shall be connected to the circuit until it is satisfactorily dealt with.

If the fault cannot be corrected immediately but it is necessary to continue operation, an adequate temporary solution shall be used. This shall be reported to the owner of the equipment so all parties are advised.

Initial safety checks shall include:

- that capacitors are discharged: this shall be done in a safe manner to avoid possibility of sparking.
- that no live electrical components and wiring are exposed while charging, recovering or purging the system.
- that there is continuity of earth bonding.

(2) Repairs to sealed components

Sealed electrical components shall be replace.

(3) Repair to intrinsically safe components
Intrinsically safe components must be replaced.

(4) Cabling
Check that cabling will not be subject to wear, corrosion, excessive pressure, vibration, sharp edges or any other adverse environmental effects.
The check shall also take into account the effects of aging or continual vibration from sources such as compressors or fans.

(5) Detection of flammable refrigerants
Under no circumstances shall potential sources of ignition be used in the searching for or detection of refrigerant leaks.
A halide torch (or any other detector using a naked flame) shall not be used.
The following leak detection methods are deemed acceptable for all refrigerant systems.
Electronic leak detectors may be used to detect refrigerant leaks but, in the case of FLAMMABLE REFRIGERANTS, the sensitivity may not be adequate, or may need re-calibration. (Detection equipment shall be calibrated in a refrigerant-free area.)
Ensure that the detector is not a potential source of ignition and is suitable for the refrigerant used.
Leak detection equipment shall be set at a percentage of the LFL of the refrigerant and shall be calibrated to the refrigerant employed, and the appropriate percentage of gas (25 % maximum) is confirmed.
Leak detection fluids are also suitable for use with most refrigerants but the use of detergents containing chlorine shall be avoided as the chlorine may react with the refrigerant and corrode the copper pipe-work.
If a leak is suspected, all naked flames shall be removed / extinguished.
If a leakage of refrigerant is found which requires brazing, all of the refrigerant shall be recovered from the system, or isolated (by means of shut off valves) in a part of the system remote from the leak. Removal of refrigerant shall be according to 2-4.6.

(6) Removal and evacuation
When breaking into the refrigerant circuit to make repairs - or for any other purpose -conventional procedures shall be used. However, for flammable refrigerants it is important that best practice be followed, since flammability is a consideration.
The following procedure shall be adhered to:
- safely remove refrigerant following local and national regulations;
  - evacuate
  - purge the circuit with inert gas
  - evacuate
  - continuously flush or purge with inert gas when using flame to open circuit
  - open the circuit

The refrigerant charge shall be recovered into the correct recovery cylinders if venting is not allowed by local and national codes.
For appliances containing flammable refrigerants, the system shall be purged with oxygen-free nitrogen to render the appliance safe for flammable refrigerants. This process might need to be repeated several times.
Compressed air or oxygen shall not be used for purging refrigerant systems.
For appliances containing flammable refrigerants, refrigerants purging shall be achieved by breaking the vacuum in the system with oxygen-free nitrogen and continuing to fill until the working pressure is achieved, then venting to atmosphere, and finally pulling down to a vacuum.
This process shall be repeated until no refrigerant is within the system. When the final oxygen-free nitrogen charge is used, the system shall be vented down to atmospheric pressure to enable work to take place.
The outlet for the vacuum pump shall not be close to any potential ignition sources, and ventilation shall be available.

(7) Charging procedures
In addition to conventional charging procedures, the following requirements shall be followed.
- Ensure that contamination of different refrigerants does not occur when using charging equipment. Hoses or lines shall be as short as possible to minimize the amount of REFRIGERANT contained in them.
- Cylinders shall be kept in an appropriate position according to the instructions.
- Ensure that the REFRIGERATING SYSTEM is earthed prior to charging the system with refrigerant.
- Label the system when charging is complete (if not already).
- Extreme care shall be taken not to overfill the REFRIGERATING SYSTEM.

Prior to recharging the system, it shall be pressure-tested with the appropriate purging gas. The system shall be leak-tested on completion of charging but prior to commissioning. A follow up leak test shall be carried out prior to leaving the site.

(8) Decommissioning

Before carrying out this procedure, it is essential that the technician is completely familiar with the equipment and all its detail. It is recommended good practice that all refrigerants are recovered safely.

Prior to the task being carried out, an oil and refrigerant sample shall be taken in case analysis is required prior to re-use of recovered refrigerant. It is essential that electrical power is available before the task is commenced.

a) Become familiar with the equipment and its operation.

b) Isolate system electrically.

c) Before attempting the procedure, ensure that:

- mechanical handling equipment is available, if required, for handling refrigerant cylinders.
- all personal protective equipment is available and being used correctly.
- the recovery process is supervised at all times by a competent person.
- recovery equipment and cylinders conform to the appropriate standards.

d) Pump down refrigerant system, if possible.

e) If a vacuum is not possible, make a manifold so that refrigerant can be removed from various parts of the system.

f) Make sure that cylinder is situated on the scales before recovery takes place.

g) Start the recovery machine and operate in accordance with instructions.

h) Do not overfill cylinders. (no more than 80 % volume liquid charge)

i) Do not exceed the maximum working pressure of the cylinder, even temporarily.

j) When the cylinders have been filled correctly and the process completed, make sure that the cylinders and the equipment are removed from site promptly and all isolation valves on the equipment are closed off.

k) Recovered refrigerant shall not be charged into another REFRIGERATING SYSTEM unless it has been cleaned and checked.

(9) Labelling

Equipment shall be labelled stating that it has been de-commissioned and emptied of refrigerant.

The label shall be dated and signed. For appliances containing FLAMMABLE REFRIGERANTS, ensure that there are labels on the equipment stating the equipment contains FLAMMABLE REFRIGERANT.

(10) Recovery

When removing refrigerant from a system, either for servicing or decommissioning, it is recommended good practice that all refrigerants are removed safely.

When transferring refrigerant into cylinders, ensure that only appropriate refrigerant recovery cylinders are employed. Ensure that the correct number of cylinders for holding the total system charge is available.

All cylinders to be used are designated for the recovered refrigerant and labelled for that refrigerant (i.e. special cylinders for the recovery of refrigerant). Cylinders shall be complete with pressure-relief valve and associated shut-off valves in good working order.

Empty recovery cylinders are evacuated and, if possible, cooled before recovery occurs.

The recovery equipment shall be in good working order with a set of instructions concerning the equipment that is at hand and shall be suitable for the recovery of the flammable refrigerant.

If in doubt, the manufacturer should be consulted. In addition, a set of calibrated weighing scales shall be available and in good working order. Hoses shall be complete with leak-free disconnect couplings and in good condition.

The recovered refrigerant shall be processed according to local legislation in the correct recovery cylinder, and the relevant waste transfer note arranged. Do not mix refrigerants in recovery units and especially not in cylinders.

If compressors or compressor oils are to be removed, ensure that they have been evacuated to an acceptable level to make certain that flammable refrigerant does not remain within the lubricant.

The compressor body shall not be heated by an open flame or other ignition sources to accelerate this process. When oil is drained from a system, it shall be carried out safely.

3 PART NAMES AND FUNCTIONS

INDOOR UNIT

MLZ-KX09NL MLZ-KX12NL MLZ-KX18NL

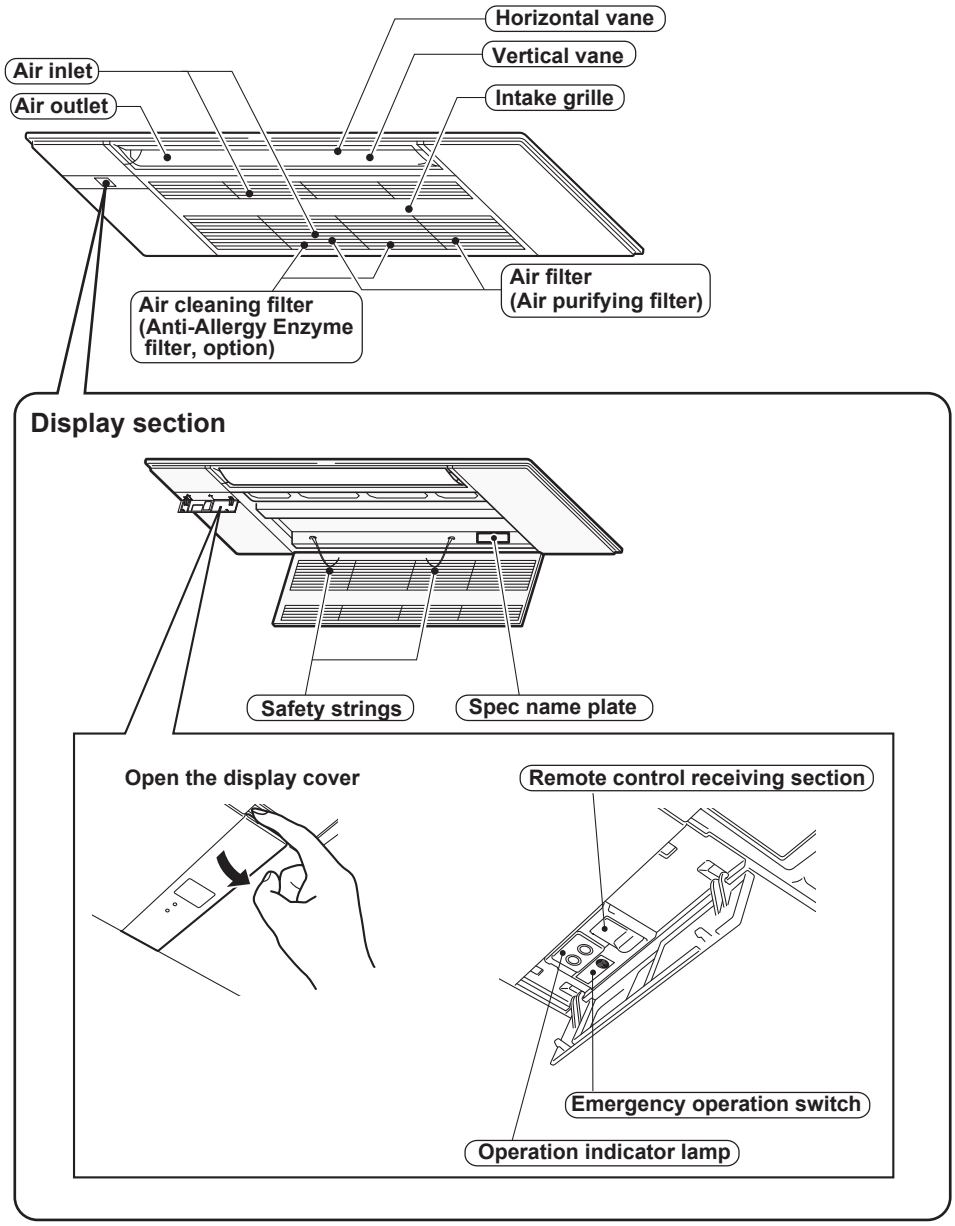

ACCESSORIES

	MODELS	MLZ-KX09NL MLZ-KX12NL MLZ-KX18NL
(1)	Alkaline battery (AAA) for remote controller	2
(2)	Drain hose (with insulation)	1
(3)	Special washer (with cushion, 4pcs)	8
(4)	Installation template	1
(5)	Fixing screw for (4) M5 × 30 mm	4
(6)	Band	1
(7)	Fixing screw for (6) 4 × 16 mm	2
(8)	Remote controller	1
(9)	Remote controller holder	1
(10)	Fixing screw for (9) 3.5 × 16 mm (Black)	2

4 SPECIFICATION

1. Single connection

Indoor model			MLZ-KX09NL
Power supply	V, phase, Hz		208/230, 1, 60
Max. fuse size (time delay)/Disconnect switch		A	15
Airflow High - Med. - Low - SLow	COOL Dry (Wet)	CFM	311 - 282 - 254 - 201
	HEAT Dry	CFM	325 - 290 - 247 - 212
Sound level High - Med. - Low - SLow	Cooling	dB (A)	38 - 34 - 31 - 27
	Heating	dB (A)	37 - 34 - 29 - 26
Cond. drain connection O.D.		in.	ø1 (26 mm)
Dimensions	W	in.	43-3/8
	D		14-3/16
	H		7-5/16
Weight		lb.	34
External finish			White

NOTE: Test conditions are based on ARI 210/240.

Indoor model			MLZ-KX12NL	MLZ-KX18NL
Power supply	V, phase, Hz		208/230, 1, 60	
Max. fuse size (time delay)/Disconnect switch		A	15	
Airflow High - Med. - Low - SLow	COOL Dry (Wet)	CFM	332 - 297 - 258 - 212	403 - 346 - 293 - 212
	HEAT Dry	CFM	350 - 311 - 272 - 212	417 - 364 - 311 - 212
Sound level High - Med. - Low - SLow	Cooling	dB (A)	40 - 36 - 32 - 27	47 - 41 - 36 - 29
	Heating	dB (A)	40 - 36 - 32 - 26	48 - 42 - 37 - 26
Cond. drain connection O.D.		in.	ø1 (26 mm)	
Dimensions	W	in.	43-3/8	
	D		14-3/16	
	H		7-5/16	
Weight		lb.	34	
External finish			White	

NOTE: Test conditions are based on ARI 210/240.

Specifications and rated conditions of main electric parts

Item \ Model		MLZ-KX09NL MLZ-KX12NL MLZ-KX18NL
Fuse	(F11)	T6.3AL250V
Horizontal vane motor	(MV1)	12 V DC
Vertical vane motor	(MV2)	12 V DC
Varistor	(NR11)	470 V
DRAIN PUMP	(DP)	13 V DC 3.9 W
FLOAT SENSOR	(FS)	5 V DC

2. Multi connection

Indoor model			MLZ-KX09NL
Power supply	V, phase, Hz		208/230, 1, 60
Max. fuse size (time delay)/Disconnect switch		A	15
Airflow High - Med. - Low - SLow	COOL Dry (Wet)	CFM	311 - 282 - 254 - 212
	HEAT Dry	CFM	325 - 290 - 247 - 212
Sound level High - Med. - Low - SLow	Cooling	dB (A)	38 - 34 - 31 - 27
	Heating	dB (A)	37 - 34 - 29 - 26
Cond. drain connection O.D.		in.	ø1 (26 mm)
Dimensions	W	in.	43-3/8
	D		14-3/16
	H		7-5/16
Weight		lb.	34
External finish			White

NOTE: Test conditions are based on ARI 210/240.

Indoor model			MLZ-KX12NL	MLZ-KX18NL
Power supply	V, phase, Hz		208/230, 1, 60	
Max. fuse size (time delay)/Disconnect switch		A	15	
Airflow High - Med. - Low - SLow	COOL Dry (Wet)	CFM	332 - 297 - 258 - 212	403 - 346 - 293 - 212
	HEAT Dry	CFM	350 - 311 - 272 - 212	417 - 364 - 311 - 212
Sound level High - Med. - Low - SLow	Cooling	dB (A)	40 - 36 - 32 - 27	47 - 41 - 36 - 29
	Heating	dB (A)	40 - 36 - 32 - 26	48 - 42 - 37 - 26
Cond. drain connection O.D.		in.	ø1 (26 mm)	
Dimensions	W	in.	43-3/8	
	D		14-3/16	
	H		7-5/16	
Weight		lb.	34	
External finish			White	

NOTE: Test conditions are based on ARI 210/240.

Specifications and rated conditions of main electric parts

Item \ Model		MLZ-KX09NL MLZ-KX12NL MLZ-KX18NL
Fuse	(F11)	T6.3AL250V
Horizontal vane motor	(MV1)	12 V DC
Vertical vane motor	(MV2)	12 V DC
Varistor	(NR11)	470 V
DRAIN PUMP	(DP)	13 V DC 3.9 W
FLOAT SENSOR	(FS)	5 V DC

4-1. OPERATING RANGE

(1) POWER SUPPLY

	Rated voltage	Guaranteed voltage (V)
Indoor unit	208/230 V 1 phase 60 Hz	Min. 187 208 230 Max. 253

(2) OPERATION

*The operating range of the outdoor unit depends on the connected outdoor unit.

Mode	Condition	Intake air temperature (°F)			
		Indoor		Outdoor	
		DB	WB	DB	WB
Cooling	Standard temperature	80	67	95	—
	Maximum temperature	90	73	115	—
	Minimum temperature	67	57	14	—
	Maximum humidity	78%		—	
Heating	Standard temperature	70	60	47	43
	Maximum temperature	80	67	75	65
	Minimum temperature	70	60	-13	-14

4-2. OUTLET AIR SPEED AND COVERAGE

Single/Multi connection

Model	Mode	Function	Airflow (CFM)	Air speed (ft./s.)	Coverage (ft.)
MLZ-KX09NL	HEAT	Dry	325	13.6	21.7
	COOL	Dry	311	13.0	20.7
		Wet	—	—	—
MLZ-KX12NL	HEAT	Dry	350	14.6	23.3
	COOL	Dry	332	13.9	22.1
		Wet	—	—	—
MLZ-KX18NL	HEAT	Dry	417	17.5	27.6
	COOL	Dry	403	16.9	26.7
		Wet	—	—	—

- The air coverage is the figure up to the position where the air speed is 1 ft./s., when air is blown out horizontally from the unit properly at the High speed position.
  The coverage should be used only as a general guideline since it varies according to the size of the room and furniture arranged inside the room.

5 OUTLINES AND DIMENSIONS

MLZ-KX09NL MLZ-KX12NL MLZ-KX18NL **Unit: inch**

INDOOR UNIT

INDOOR UNIT OUTLINE DRAWING

(TOP VIEW)

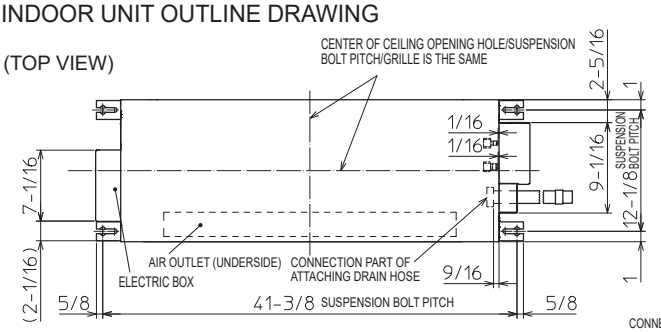

REMOTE CONTROLLER OUTLINE DRAWING

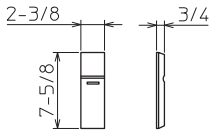

(FRONT VIEW)

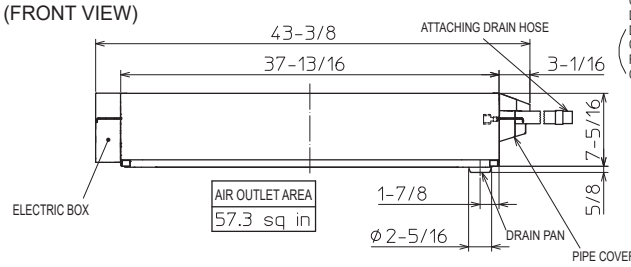

(RIGHT SIDE VIEW)

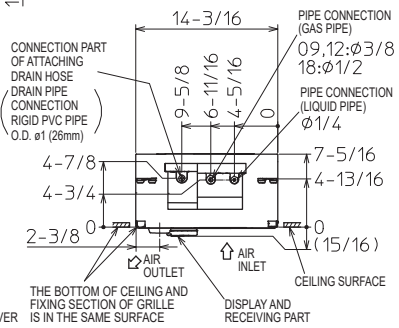

GRILLE OUTLINE DRAWING
(MLP-449WU)

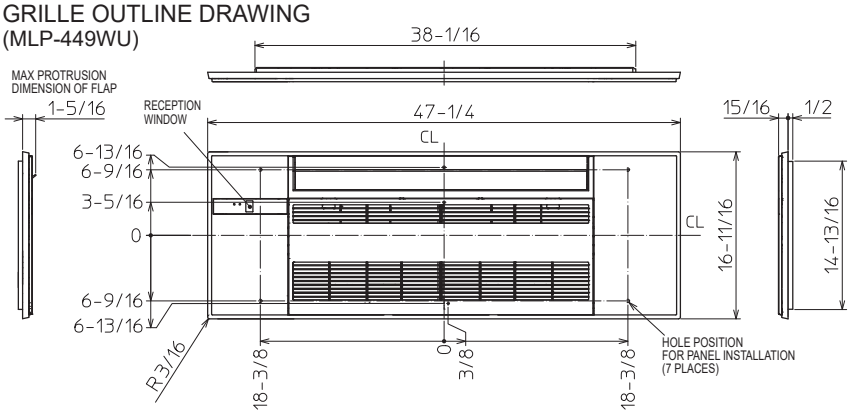

		KX09/12NL	KX18NL
EXTENSION PIPE	LIQUID PIPE O.D.	ø1/4	
	GAS PIPE O.D.	ø3/8	ø1/2
CONNECTIONG OF PIPE	LIQUID PIPE	FLARED CONNECTION ø1/4	
	GAS PIPE	FLARED CONNECTION ø3/8	FLARED CONNECTION ø1/2
DRAIN HOSE		HEAT INSULATER O.D. ø1-1/4 / CONNECTION I.D. ø1	EFFECTIVE LENGTH 18-7/8
DRAIN PIPE CONNECTION		RIGID PVC PIPE O.D. ø1 (26mm)	

NOTE 1. CUT THE DRAIN HOSE (ACCESSORY) FOR USE, IF NECESSARY.

INDOOR UNIT DETAIL VIEW
(TOP VIEW)

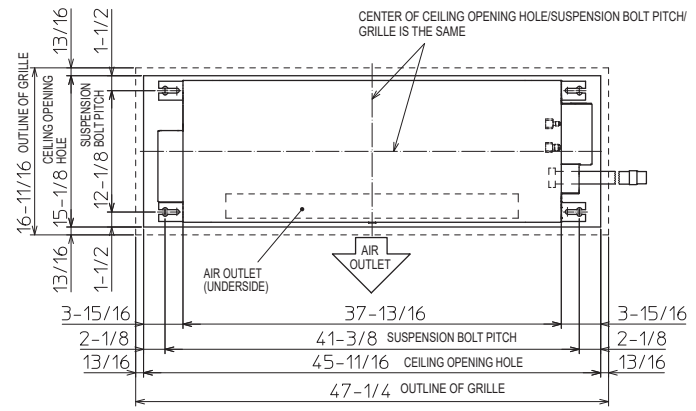

(FRONT VIEW)

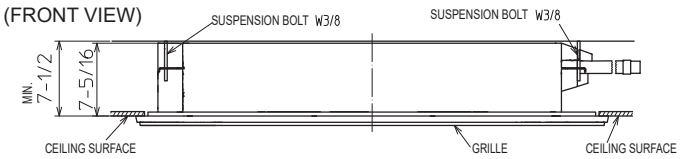

THE METHOD FOR STANDING DRAIN FROM INDOOR UNIT
* CUT THE DRAIN HOSE (ACCESSORY) FOR USE, IF NECESSARY.

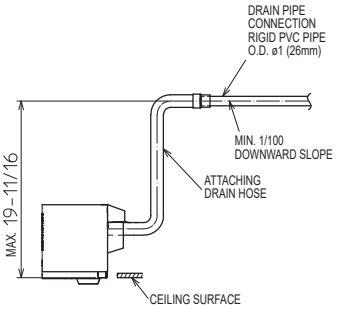

6 WIRING DIAGRAM

INDOOR UNIT

MLZ-KX09NL MLZ-KX12NL

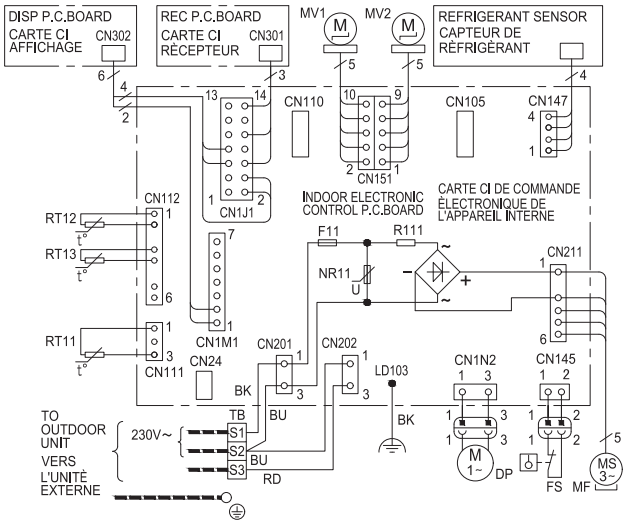

SYMBOL SYMBOLE	NAME NOM	SYMBOL SYMBOLE	NAME NOM
MF	FAN MOTOR MOTEUR DE VENTILATEUR	NT11	VARISTOR VARISTANCE
DP	DRAIN PUMP PUMPE DE VIDANGE	R111	RESISTOR RÉSISTANCE
FS	FLOAT SENSOR CAPTEUR DE FLOTTEMENT	F11	FUSE FUSIBLE (T6.3AL250V)
TB	TERMINAL BLOCK BORNIER	CN110	WIRELESS LAN MODULE MODULE LAN SANS FIL
MV1	VERTICAL VANE MOTOR MOTEUR DE L'AILETTE VERTICALE	MV2	HORIZONTAL VANE MOTOR MOTEUR DE L'AILETTE HORIZONTALE
RT11	ROOM TEMP. THERMISTOR THERMISTANCE DE TEMP. AMBIANTE		
RT12	COIL TEMP. THERMISTOR THERMISTANCE DE TEMP. DE BOBINE (MAIN PRINCIPALE)		
RT13	COIL TEMP. THERMISTOR THERMISTANCE DE TEMP. DE BOBINE (SUB SECONDAIRE)		

* A disconnect should be required by local code.
* Se procurer un sectionneur conforme aux réglementations locales.

NOTES:
1. About the outdoor side electric wiring refer to the outdoor unit electric wiring diagram for servicing.
2. Use copper conductors only. (For field wiring)
3. Symbols below indicate.

REMARQUES:
1. Pour le câblage électronique côté extérieur, se reporter au schéma d'entretien du câblage électronique de l'appareil extérieur.
2. Utiliser des fils d'alimentation en cuivre.
3. Les symboles ont les significations suivantes.

: Terminal block Borne

: Connector Connecteur

This refrigerant sensor shall only be replaced with manufacturer approved sensor.
Ce capteur de réfrigérant ne doit être remplacé que par un capteur approuvé par le fabricant.

MLZ-KX18NL

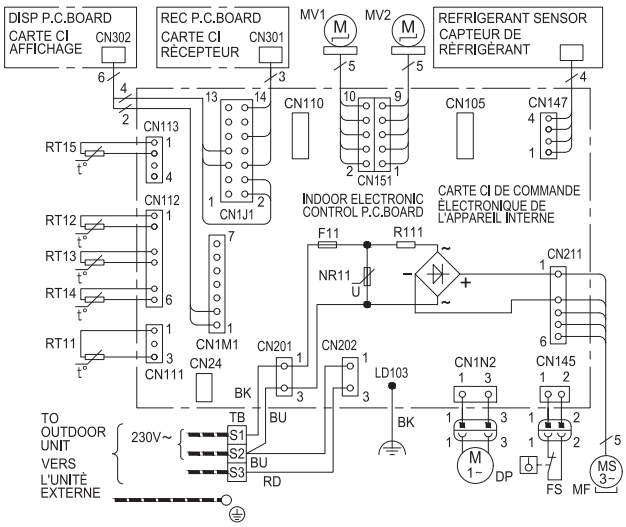

SYMBOL SYMBOLE	NAME NOM	SYMBOL SYMBOLE	NAME NOM
MF	FAN MOTOR MOTEUR DE VENTILATEUR	NT11	VARISTOR VARISTANCE
DP	DRAIN PUMP PUMPE DE VIDANGE	R111	RESISTOR RÉSISTANCE
FS	FLOAT SENSOR CAPTEUR DE FLOTTEMENT	F11	FUSE FUSIBLE (T6.3AL250V)
TB	TERMINAL BLOCK BORNIER	CN110	WIRELESS LAN MODULE MODULE LAN SANS FIL
MV1	VERTICAL VANE MOTOR MOTEUR DE L'AILETTE VERTICALE	MV2	HORIZONTAL VANE MOTOR MOTEUR DE L'AILETTE HORIZONTALE
RT11	ROOM TEMP. THERMISTOR THERMISTANCE DE TEMP. AMBIANTE	RT14	COIL TEMP. THERMISTOR THERMISTANCE DE TEMP. DE BOBINE (MAIN2 PRINCIPALE2)
RT12	COIL TEMP. THERMISTOR THERMISTANCE DE TEMP. DE BOBINE (MAIN1 PRINCIPALE1)	RT15	COIL TEMP. THERMISTOR THERMISTANCE DE TEMP. DE BOBINE (MAIN3 PRINCIPALE3)
RT13	COIL TEMP. THERMISTOR THERMISTANCE DE TEMP. DE BOBINE (SUB SECONDAIRE)		

* A disconnect should be required by local code.
* Se procurer un sectionneur conforme aux réglementations locales.

NOTES:
1. About the outdoor side electric wiring refer to the outdoor unit electric wiring diagram for servicing.
2. Use copper conductors only. (For field wiring)
3. Symbols below indicate.

REMARQUES:
1. Pour le câblage électronique côté extérieur, se reporter au schéma d'entretien du câblage électronique de l'appareil extérieur.
2. Utiliser des fils d'alimentation en cuivre.
3. Les symboles ont les significations suivantes.

: Terminal block Borne

: Connector Connecteur

This refrigerant sensor shall only be replaced with manufacturer approved sensor.
Ce capteur de réfrigérant ne doit être remplacé que par un capteur approuvé par le fabricant.

7 REFRIGERANT SYSTEM DIAGRAM

Unit: inch(mm)

INDOOR UNIT

MLZ-KX09NL
MLZ-KX12NL

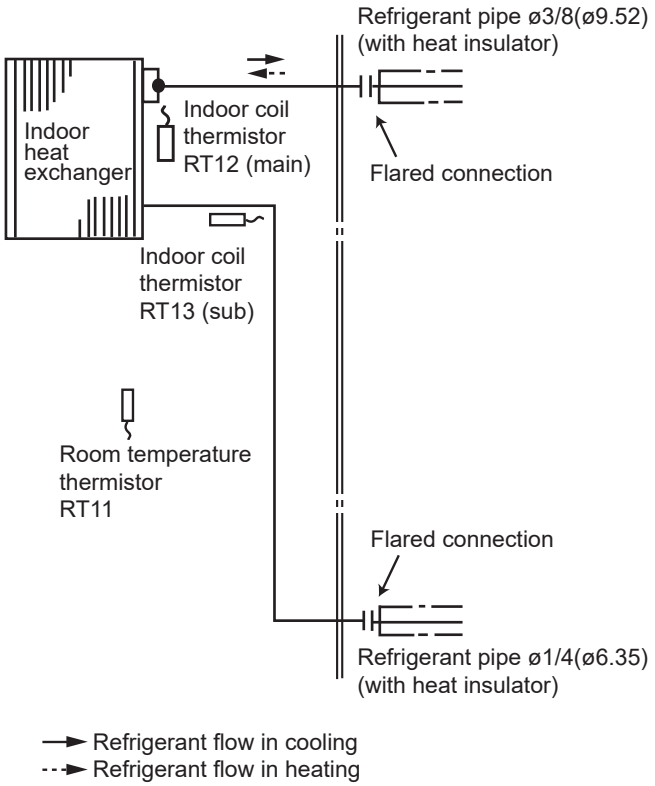

MLZ-KX18NL

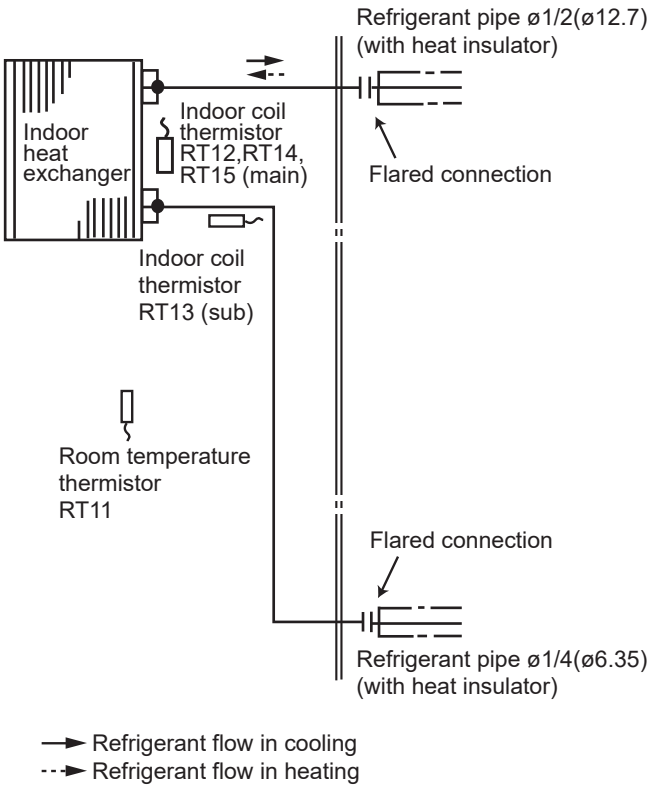

8 SERVICE FUNCTIONS

MLZ-KX09NL MLZ-KX12NL MLZ-KX18NL

8-1. TIMER SHORT MODE

- For service, the following set time can be shortened by bridging the timer short mode point on the electronic control P.C. board. (Refer to 10-7.)
- The set time for the ON/OFF timer can be reduced to 1 second for each minute.
- After the breaker is turned on, the time for starting the compressor, which normally takes 3 minutes, can be reduced to 3 seconds. Restarting the compressor, which takes 3 minutes, cannot be reduced.

8-2. HOW TO SET REMOTE CONTROLLER EXCLUSIVELY FOR A PARTICULAR INDOOR UNIT

A maximum of 4 indoor units with wireless remote controllers can be used in a room.
To operate the indoor units individually with each remote controller, assign a number to each remote controller according to the number of the indoor unit.

This setting can be set only when all of the following conditions are met:

- The remote controller is powered OFF.
- Weekly timer is not set.
- Weekly timer is not being edited.

1. How to modify the electronic control P.C. board

Turn OFF the power supply before modification. To assign a number to each indoor unit , cut off “JR05” and “JR06” on the electronic control P.C. board as shown in Table 1. (Refer to 10-7.)

Table 1

	JR05	JR06
Unit No. 1	No modification	No modification
Unit No. 2	Cut off JR05	No modification
Unit No. 3	No modification	Cut off JR06
Unit No. 4	Cut off JR05	Cut off JR06

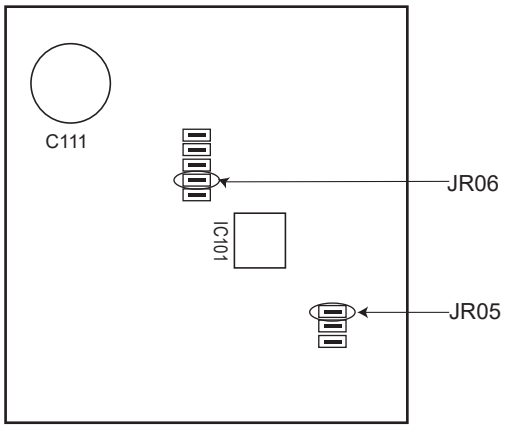

2. How to set the remote controller

(1) Hold down [1~4] button on the remote controller for 2 seconds to enter the pairing mode.
(2) Press [1~4] button again and assign a number to each remote controller.
Each press of [1~4] button advances the number in the following order: 1 → 2 → 3 → 4.
(3) Press [EDIT/SEND SET] button to complete the pairing setting.

After the setting, turn ON the power supply and with the remote controller headed towards the indoor unit, press the STOP/OPERATE (OFF/ON) button. If 1 or 2 beeps is heard from the indoor unit, the setting is completed correctly.
The remote controller that first sends a signal to an indoor unit will be regarded as the remote controller for the indoor unit. Once they are set, the indoor unit will only receive the signal from the assigned remote controller afterwards.

8-3. AUTO RESTART FUNCTION

When the indoor unit is controlled with the remote controller, the operation mode, the set temperature, and the fan speed are memorized by the indoor electronic control P.C. board. “AUTO RESTART FUNCTION” automatically starts operation in the same mode just before the shutoff of the main power.

Operation

① If the main power has been cut, the operation settings remain.

② After the power is restored, the unit restarts automatically according to the memory.
(However, it takes at least 3 minutes for the compressor to start running.)

How to disable “AUTO RESTART FUNCTION”

① Turn off the main power for the unit.

② Cut the jumper wire to JR77 on the indoor electronic control P.C. board. (Refer to 10-7.)

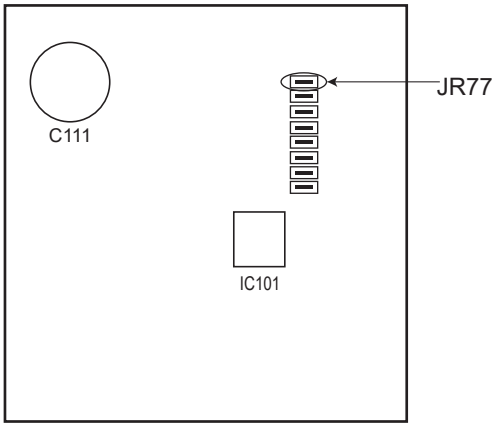

NOTE:

- The operation settings are memorized when 10 seconds has passed after the indoor unit was operated with the remote controller.
- If main power is turned OFF or a power failure occurs while AUTO START/STOP timer is active, the timer setting is cancelled.
- If the unit has been off with the remote controller before power failure, the auto restart function does not work as the power button of the remote controller is off.
- To prevent breaker tripping due to inrush current at start up, systematize other home appliance not to turn on at the same time.
- When some air conditioners are connected to the same supply system, if they are operated before power failure, the starting current of all the compressors may flow simultaneously at restart.
  Therefore, the special counter-measures are required to prevent the main voltage-drop or the rush of the starting current by adding to the system that allows the units to start one by one.

8-4. P.C. BOARD MODIFICATION FOR CHANGING AIRFLOW VOLUME

Change Slide switch SW3 setting according to the height of ceiling.

Slide switch SW3	Normal	Increase airflow volume
Ceiling height	8.0 ft. (2.4 m) or below	above 8.0 ft. (2.4 m) and 9.0 ft. (2.7 m) or below

NOTE: When the ceiling is above 9.0 ft. (2.7 m), airflow volume may be insufficient even with the Slide switch (SW3) set to "increase airflow".

How to change Dip switch (SW3) setting (Factory setting is normal)

1. Make sure that the breaker for air conditioner is turned OFF.
2. Remove electrical cover (1) and (2) of the indoor unit.
3. Slide out the electronic control P.C. board, and switch up the slide switch (SW).
4. Put the electronic control P.C. board back to the original position, and install electrical cover (1) and (2).

NOTE:

• Perform static elimination before setting.

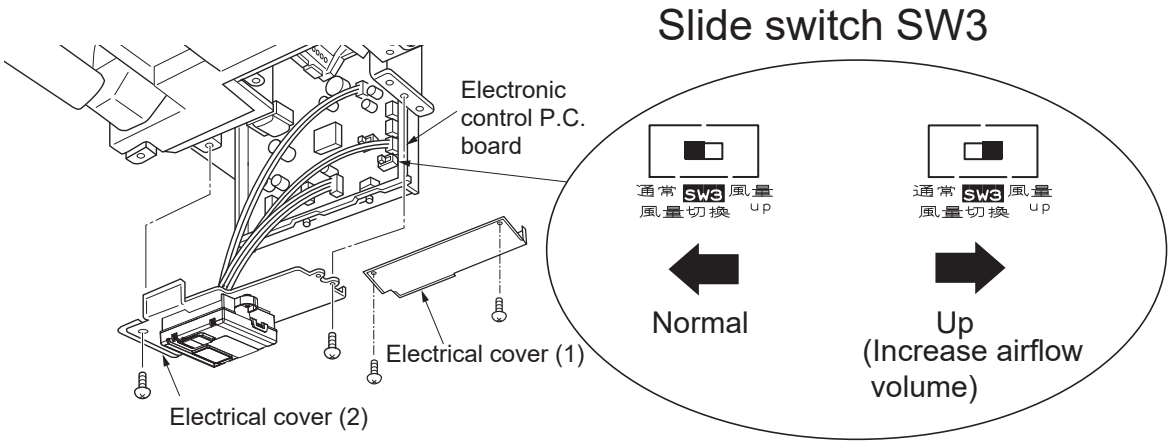

8-5. P.C. BOARD MODIFICATION FOR CHANGING AIRFLOW DIRECTION ADJUSTMENT

The setting when the higher airflow is preferred in the Airflow direction (1)

The angle of airflow direction (1) can be slightly heightened by changing SWV1 to up.
However, it may cause the dirt on the ceiling.

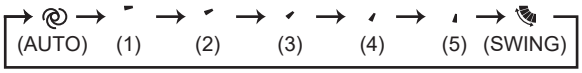

How to change Slide switch (SWV1) setting (Factory setting is normal)

1. Make sure that the breaker for air conditioner is turned OFF.
2. Remove the electrical cover (1) and (2) of the indoor unit.
3. Slide out the electronic control P.C. board, and change the slide switch (SWV1) to up.
4. Put the electronic control P.C. board back to the original position, and install the electrical cover (1) and (2).

NOTE:

• Perform static elimination before setting.

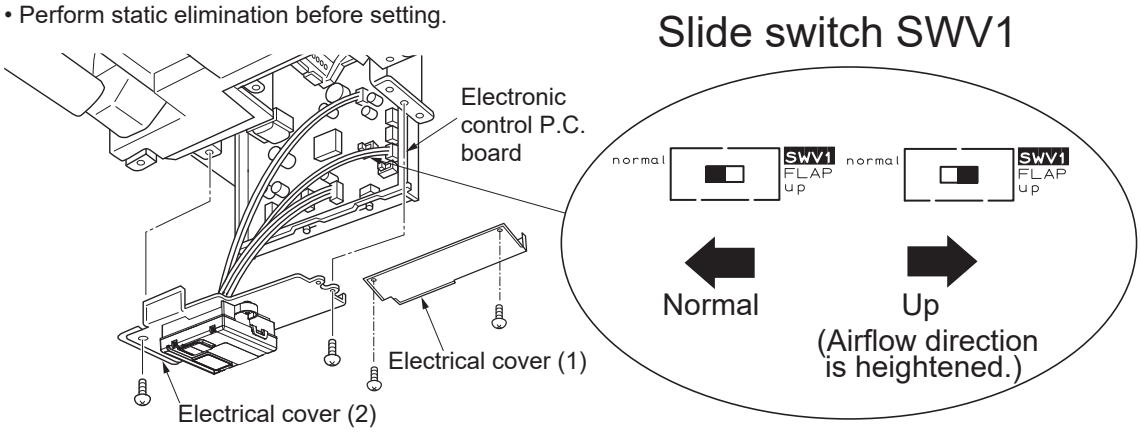

8-6. WIRELESS LAN CONTROL

1. Radio wave usage precautions

Contains FCC ID:NKR-MB43
Contains IC:4441A-MB43

⚠ CAUTION	
⃠	• Changes or modifications not expressly approved by the party responsible for compliance could void the user's authority to operate the equipment. This device must not be co-located or operating in conjunction with any other antenna or transmitter.
	• This device complies with FCC/IC radiation exposure limits set forth for an uncontrolled environment and meets the FCC radio frequency (RF) Exposure Guidelines and RSS-102 of the IC radio frequency (RF) Exposure rules. This device should be installed and operated keeping the radiator at least 7-7/8 in. (20 cm) or more away from person's body.
	• This device complies with part 15 of the FCC Rules and Industry Canada license-exempt RSSs. Operation is subject to the following two conditions: (1) This device may not cause harmful interference; and (2) This device must accept any interference received, including interference that may cause undesired operation.
	NOTE: This device has been tested and found to comply with the limits for a Class B digital device, pursuant to part 15 of the FCC Rules. These limits are designed to provide reasonable rotection against harmful interference in a residential installation. This equipment generates, uses and can radiate radio frequency energy and, if not installed and used in accordance with the instructions, may cause harmful interference to radio communications. However, there is no guarantee that interference will not occur in a particular installation. If this equipment does cause harmful interference to radio or television reception, which can be determined by turning the equipment off and on, the user is encouraged to try to correct the interference by one or more of the following measures: • Reorient or relocate the receiving antenna. • Increase the separation between the equipment and receiver. • Connect the equipment into an outlet on a circuit different from that to which the receiver is connected. • Consult the dealer or an experienced radio/TV technician for help.

2. Wireless LAN module introduction

This Wireless LAN module, communicates the status information and controls the commands from the kumo cloud® by connecting to an indoor unit.

3. Setting up

3-1. Download the kumo cloud® application

https://www.mitsubishicomfort.com/kumocloud

3-2. Create an account and log into it according to the owner manual of the kumo cloud®

Owner manual
https://docs.kumocloud.com/owner_manual.pdf

* Professional work is required to complete the setup of connecting the indoor unit to the kumo cloud®.

4. When it doesn't connect well

Check the following, and pair the Wireless LAN module and the Router.

- Make sure that the Wireless LAN module connect to a 2.4 GHz Wi-Fi network. The Wireless LAN module will not work on 5 GHz Wi-Fi network.
- Make sure that the communication distance is not too far between the Wireless LAN module and the Router.
- Make sure that the number of connected devices to the Router does not exceed the limit.
- Check if the Router is connected to Internet.
- Set up the Wireless LAN module after operating the air conditioner using the wireless remote controller at least once.

4-1. Reconnect the Wireless Network

At the first install, the system will automatically start into network configuration mode. After the system has been configured to connect to a wireless network, in order to change the settings to a different network, the user can follow the instructions below to place the system back into network configuration mode.

Reconnect the wireless network after a new wireless router has been installed and connected to the internet or reconnect the wireless network if kumo cloud® was set up in a new construction with a temporary network.

Sending "¯3" with the remote controller switches the connection mode.

- Press ⏻OFF/ON to stop the operation.
- Hold down the Temperature ⊕ for 5 seconds.
- Select "¯ 3" by pressing Temperature ⊕ and ⊖.
- Point the remote controller toward the indoor unit and press the ⏻OFF/ON .

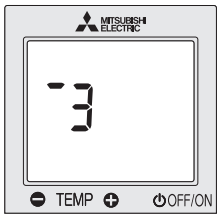

You can check the connection mode by the blinking state of the Connection mode LED (green light).

* The blinking state of the LED can change due to an update. Refer to the latest operation manual of the kumo cloud®.

NOTE:
The connection modes and the lighting/blinking state of each mode can change due to an update. Refer to the latest operation manual of the kumo cloud®.

5. Checking the wireless setting status

You can check the transmission conditions with operation indicator lamp on indoor unit. Follow the procedure below when you cannot connect the wireless LAN module to the wireless network or transmission error occurs.

5-1. Wireless status display mode

- Press ⏻OFF/ON to stop the operation.
- Hold down the Temperature ⊕ for 5 seconds.
- Select "¯ 9" by pressing Temperature ⊕ and ⊖.
- Point the remote controller toward the indoor unit and press the ⏻OFF/ON .

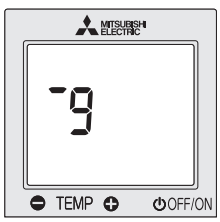

- Refer to the operation manual of the kumo cloud® for operation indicator lamp on indoor unit and wireless LAN module.

NOTE:

- When operating the air conditioner from a position where you cannot see it, check the air conditioner, its surroundings, and the conditions of people in the room in advance.
- When there are people in the room, let them know in advance that you will be operating the air conditioner from a distance.
- Ensure that the Router supports the WPA2-AES encryption setting before starting the Wireless LAN module setup.
- The End user should read and accept the terms and conditions of the kumo cloud® service before using this Wireless LAN module.
- Use of the Wireless LAN module implies acceptance of our terms and conditions.
- To complete connection to the kumo cloud® physical access to the access point may be required.
- This Wireless LAN module will not commence transmission of any operational data from the system until the End user registers and accepts the terms and conditions of the Wi-Fi service.
- This Wireless LAN module should not be connected to any Mitsubishi Electric system which is to provide cooling or heating to critical applications.
- Mitsubishi Electric's Wireless LAN module is designed for communication to Mitsubishi Electric's kumo cloud®.
  Mitsubishi Electric is not responsible for any (i) underperformance of a system or any product;
  (ii) system or product fault; or (iii) loss or damage to any system or product; which is caused by or arises from connection to and/or use of any third party Wireless LAN module or any third party wireless or Wi-Fi service with Mitsubishi Electric equipment

The Wireless LAN module uses Open Source Software. To view the Open Source software licence(s), refer to the Licenses.
https://docs.kumocloud.com/software_licenses.pdf

"Wi-Fi", "WPA2." are trademarks or registered trademarks of the Wi-Fi Alliance.

6. Specifications

Wireless LAN module specifications

Wireless LAN-compatible standard	IEEE802.11b/g/n
RF channel	1ch~11ch
Frequency Band	2.4GHz only
Security	WPA2 only
FCC ID	NKR-MB43
IC	4441A-MB43

9 MICROPROCESSOR CONTROL

MLZ-KX09NL MLZ-KX12NL MLZ-KX18NL

WIRELESS REMOTE CONTROLLER

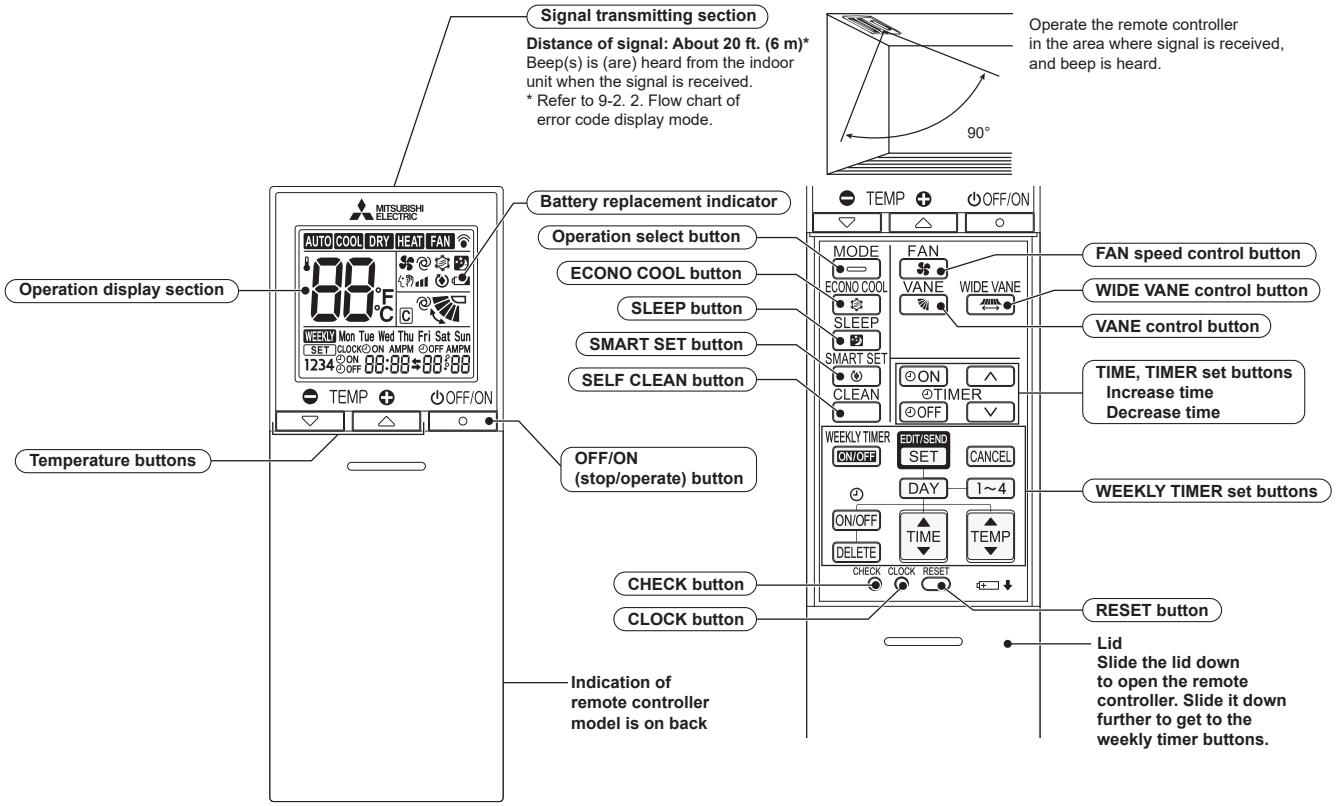

NOTE: Last setting will be stored after the unit is turned OFF with the remote controller. Indoor unit receives the signal of the remote controller with beeps.

INDOOR UNIT DISPLAY SECTION

Operation Indicator lamp

The operation indicator at the right side of the indoor unit indicates the operation state.

• The following indication applies regardless of shape of the indication.

Indication	Operation state	Room temperature
● ●	The unit is operating to reach the set temperature	About 4°F(2°C) or more away from set temperature
● ○	The room temperature is approaching the set temperature	About 2 to 4°F(1 to 2°C) from set temperature
● ☼	Standby mode (Refer to multi system operation)	—

● Lit
☼ Blinking
○ Not lit

9-1. COOL (COOL) OPERATION

(1) Press OFF/ON(stop/operate) button.
OPERATION INDICATOR lamp of the indoor unit turns on with a beep tone.
(2) Select COOL mode with Operation select button.
(3) Press Temperature buttons TEMP ⊖ or ⊕ button to select the desired temperature. The setting range is 61 - 88°F (16 - 31°C).

1. Coil frost prevention

The compressor operational frequency is controlled by the temperature of the indoor heat exchanger to prevent the coil from frosting.
When the temperature of indoor heat exchanger becomes too low, the coil frost prevention mode works.
The indoor fan operates at the set speed and the compressor stops. This mode continues until the temperature of indoor heat exchanger rises.

NOTE: Do not operate in COOL mode at low outside temperature [less than 14°F (-10°C)]. Water condensed in the unit may drip and wet or damage furniture, etc.

9-2. DRY (DRY) OPERATION

(1) Press OFF/ON(stop/operate) button.
OPERATION INDICATOR lamp of the indoor unit turns on with a beep tone.
(2) Select DRY mode with Operation select button.
(3) The set temperature is determined from the initial room temperature.

1. Coil frost prevention

Coil frost prevention works the same way as that in COOL mode. (9-1.1.)

9-3. FAN (FAN) OPERATION

(1) OPERATION INDICATOR lamp of the indoor unit turns on with a beep tone.
(2) Select FAN mode with Operation select button.
(3) Select the desired fan speed. When AUTO, it becomes Low.
Only indoor fan operates.
Outdoor unit does not operate.

9-4. HEAT (HEAT) OPERATION

(1) Press OFF/ON(stop/operate) button.
OPERATION INDICATOR lamp of the indoor unit turns on with a beep tone.
(2) Select HEAT mode with Operation select button.
(3) Press Temperature buttons TEMP ⊖ or ⊕ button to select the desired temperature. The setting range is 50 – 88°F (10 – 31°C).

1. Cold air prevention control

When the compressor is not operating or is starting, and the temperature of indoor heat exchanger and/or the room temperature is low or when defrosting is being done, the indoor fan will stop or rotate in Very Low speed.

2. Defrosting

Defrosting starts when the temperature of outdoor heat exchanger becomes too low.
The compressor stops once, the indoor/outdoor fans stop, the 4-way valve reverses, and the compressor re-starts.
This mode continues until the temperature of outdoor heat exchanger rises or the fixed time passes.

9-5. AUTO CHANGE OVER ··· AUTO MODE OPERATION

Once desired temperature is set, unit operation is switched automatically between COOL and HEAT operation.

Mode selection

(1) Initial mode
When unit starts the operation with AUTO operation from OFF:
- If the room temperature is higher than the set temperature, operation starts in COOL mode.
- If the room temperature is equal to or lower than the set temperature, operation starts in HEAT mode.

(2) Mode change
COOL mode changes to HEAT mode when about 15 minutes have passed with the room temperature 4°F (2°C) below the set temperature.
HEAT mode changes to COOL mode when about 15 minutes have passed with the room temperature 4°F (2°C) above the set temperature.

NOTE 1

If 2 or more indoor units are operating in multi system, there might be a case that the indoor unit, which is operating in AUTO (AUTO), cannot change over to the other operating mode (COOL ↔ HEAT) and becomes a state of standby.
Refer to **NOTE 2 "FOR MULTI SYSTEM AIR CONDITIONER"**.

NOTE 2
FOR MULTI SYSTEM AIR CONDITIONER
OUTDOOR UNIT: MXZ series

Multi system air conditioner can connect 2 or more indoor units with one outdoor unit.

- When you try to operate 2 or more indoor units with one outdoor unit simultaneously, one for the cooling and the others for heating, the operation mode of the indoor unit that operates first is selected. Other indoor units cannot operate, and operation indicator lamp blinks as shown in the figure below. In this case, set all the indoor units to the same operation mode.

OPERATION INDICATOR

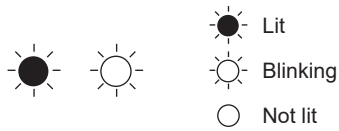

- When indoor unit starts the operation while the defrosting of outdoor unit is being done, it takes a few minutes (max. 10 minutes) to blow out the warm air.
- In the heating operation, though indoor unit that does not operate may get warm or the sound of refrigerant flowing may be heard, they are not malfunction. The reason is that the refrigerant continuously flows into it.

9-6. AUTO VANE OPERATION

1. Horizontal vane

(1) Vane motor drive

These models are equipped with a stepping motor for the horizontal vane. The rotating direction, speed, and angle of the motor are controlled by pulse signals (approximately 12 V) transmitted from indoor microprocessor.

(2) The horizontal vane angle and mode change as follows by pressing VANE control button.

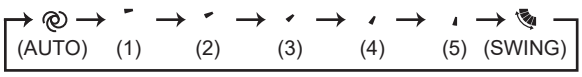

NOTE: The setting when the higher airflow is preferred in the Airflow direction (1)
The angle of airflow direction (1) can be slightly heightened by changing SWV1 to up.
(Refer to 8-5. P.C. BOARD MODIFICATION FOR CHANGING AIRFLOW DIRECTION ADJUSTMENT.)
However, it may cause the dirt on the ceiling.
Factory setting is normal.

(3) Positioning

To confirm the standard position, the vane moves until it touches the vane stopper. Then the vane is set to the selected angle.

Confirming of standard position is performed in the following cases:

(a) When the power supply turns on.
(b) When the operation starts or finishes (including timer operation).
(c) When the test run starts.
(d) When multi-standby starts or finishes.
(e) When the swing operation finishes.

(4) VANE AUTO (@) mode

In VANE AUTO mode, the microprocessor automatically determines the vane angle and operation to make the optimum room-temperature distribution.

(1) In COOL and DRY operation Vane angle is fixed to Angle 1.

(2) In HEAT operation Vane angle is fixed to Angle 4.

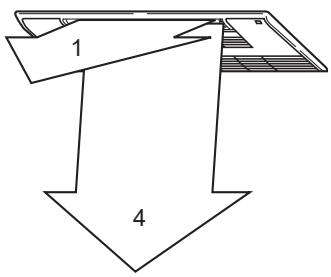

(5) STOP (operation OFF) and ON TIMER standby

In the following cases, the horizontal vane returns to the closed position.

(a) When OFF/ON(stop/operate) button is pressed (POWER OFF).
(b) When the operation is stopped by the emergency operation.
(c) When ON TIMER is ON standby.

(6) SWING ( ) mode
By selecting SWING mode with VANE control button, the horizontal vanes swing vertically.
When COOL, DRY or FAN mode is selected, only the upper vane swings.

(7) Cold air prevention in HEAT operation
The horizontal vane position is set to Upward.

(8) ECONO COOL ( ) operation (ECONOmical operation)
When ECONO COOL button is pressed in COOL mode, set temperature is automatically set 4°F(2°C) higher by micro-processor. However, the temperature on the LCD screen on the remote controller is not changed.
Also the horizontal vane swings in various cycle.
SWING operation makes you feel cooler than set temperature. So, even though the set temperature is higher, the air conditioner can keep comfort. As a result, energy can be saved.
To cancel this operation, select a different mode or press one of the following buttons in ECONO COOL operation: ECONO COOL, WIDE VANE control or VANE control button.

2. Vertical vane

(1) Press WIDE VANE control button to change horizontal airflow direction.
- The vertical vane moves for about 30 seconds.
  (After 30 seconds, the vertical vane moves to its original position. In this case, press WIDE VANE control button again.)

(2) Press WIDE VANE control button again to set horizontal airflow direction.
- The vertical vane stops and the airflow direction is set.

(3) Positioning
To confirm the standard position, the vane moves until it touches the vane stopper. Then the vane set to the desired angle.
Confirming of standard position is performed in the following cases:
(a) When OFF/ON(stop/operate) button is pressed (POWER ON).
(b) When SWING is started.

9-7. DRAIN PUMP/FLOAT SENSOR CONTROL

1. Drain pump

Operating condition:
1. During COOL, DRY, or emergency COOL operation
2. When float sensor detects water level above fixed point during:
   (a) HEAT operation.
   (b) emergency HEAT operation.
   (c) standby when during multi system operation.
   (d) standby when ON timer is set.
   (e) operation STOP.

Drain pump operates in conditions 1 or 2.

Operation stop condition:
Condition other than 1 or 2 indicated above.

2. Float sensor

Float moves with the up and down of water surface inside the drain pan, and judges water level.
(Fixed point differs at raised and lowered water levels.)

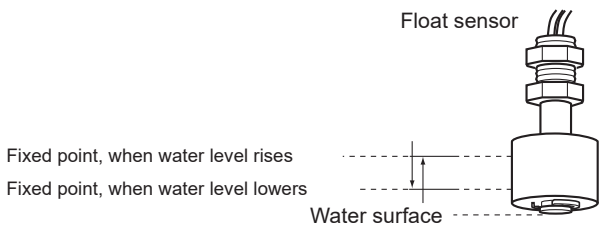

9-8. TIMER OPERATION

1. How to set the time

(1) Check that the current time is set correctly.

NOTE: Timer operation will not work without setting the current time. Initially “0:00” blinks at the current time display of TIME MONITOR, so set the current time correctly with CLOCK button.

How to set the current time

(a) Press the CLOCK button.

(b) Press the TIME set buttons (∧ and ∨) to set the current time.

- Each time Increase time button (∧) is pressed, the set time increases by 1 minute, and each time Decrease time button (∨) is pressed, the set time decreases by 1 minute.
- Pressing those buttons longer, the set time increases/decreases by 10 minutes.

(c) Press the CLOCK button.

(2) Press OFF/ON(stop/operate) button to start the air conditioner.

(3) Set the time of timer.

ON timer setting

(a) Press ON TIMER button(ON) during operation.

(b) Set the time of the timer using TIME set buttons (∧ and ∨). *

OFF timer setting

(a) Press OFF TIMER button (OFF) during operation.

(b) Set the time of the timer using TIME set buttons (∧ and ∨). *

* Each time Increase time button (∧) is pressed, the set time increases by 10 minutes: each time Decrease time button (∨) is pressed, the set time decreases by 10 minutes.

2. To release the timer

To release ON timer, press ON TIMER button (ON).

To release OFF timer, press OFF TIMER button(OFF).

TIMER is cancelled and the display of set time disappears.

PROGRAM TIMER

- OFF timer and ON timer can be used in combination. The set time that is reached first will operate first.
- “ ⬅ ” and “ ➡ ” display shows the order of OFF timer and ON timer operation.

(Example 1) The current time is 8:00 PM.
The unit turns off at 11:00 PM, and on at 6:00 AM.

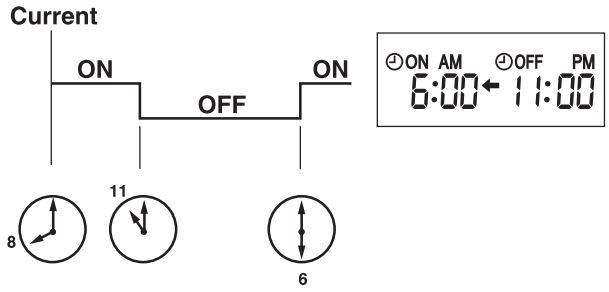

(Example 2) The current time is 11:00 AM.
The unit turns on at 5:00 PM, and off at 9:00 PM.

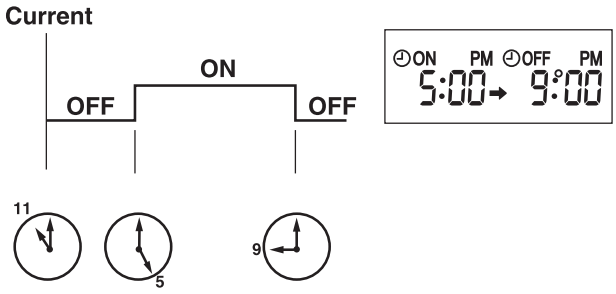

NOTE: If the main power is turned OFF or a power failure occurs while ON/OFF timer is active, the timer setting is cancelled. As these models are equipped with an auto restart function, the air conditioner starts operating with timer cancelled when power is restored.

9-9. WEEKLY TIMER OPERATION

- A maximum of 4 ON or OFF timers can be set for individual days of the week.
- A maximum of 28 ON or OFF timers can be set for a week.

E.g. : Runs at 75°F (24°C) from waking up to leaving home, and runs at 81°F (27°C) from getting home to going to bed on weekdays. Runs at 81°F (27°C) from waking up late to going bed early on weekends.

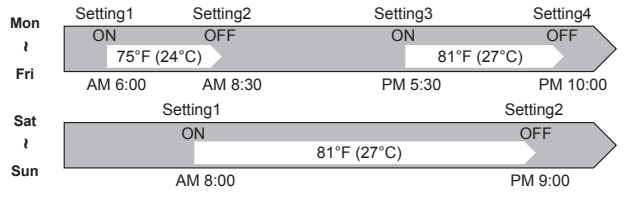

NOTE:

- The simple ON/OFF timer setting is available while the weekly timer is on. In this case, the ON/OFF timer has priority over the weekly timer; the weekly timer operation will start again after the simple ON/OFF timer is complete.
- When the weekly timer is set, temperature cannot be set to 50°F(10°C).
- The weekly timer operation and SMART SET operation cannot be used together.

1. How to set the weekly timer

* Make sure that the current time and day are set correctly.

(1) Press [EDIT/SEND SET] button to enter the weekly timer setting mode.

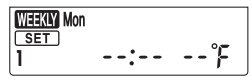

* [SET] blinks.

(2) Press [DAY] and [1~4] buttons to select setting days and/or numbers.

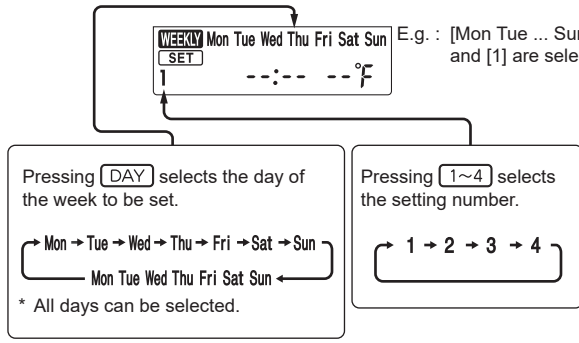

(3) Press [ON/OFF], [TIME], and [TEMP] buttons to set ON/OFF, time, and temperature.

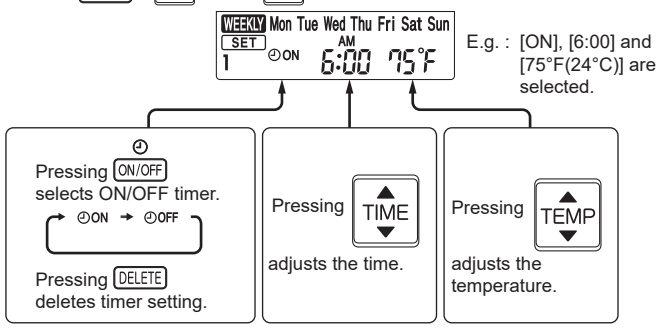

* Hold down the button to change the time quickly.

* The temperature can be set between 61°F and 88°F (16°C and 31°C) at weekly timer.

Press [DAY] and [1~4] buttons to continue setting the timer for other days and/or numbers.

(4) Press [EDIT/SEND SET] button to complete and transmit the weekly timer setting.

* [SET] which was blinking goes out, and the current time will be displayed.

NOTE:

- Press [EDIT/SEND SET] button to transmit the setting information of weekly timer to the indoor unit. Point the remote controller toward the indoor unit for 3 seconds.
- When setting the timer for more than one day of the week or one number, [EDIT/SEND SET] button does not have to be pressed per each setting. Press [EDIT/SEND SET] button once after all the settings are complete. All the weekly timer settings will be saved.
- Press [EDIT/SEND SET] button to enter the weekly timer setting mode, and press and hold [DELETE] button for 5 seconds to erase all weekly timer settings. Point the remote controller toward the indoor unit.

(5) Press [WEEKLY TIMER ON/OFF] button to turn the weekly timer ON. ([WEEKLY] lights.)

- When the weekly timer is ON, the day of the week whose timer setting is complete, will light.

Press [WEEKLY TIMER ON/OFF] button again to turn the weekly timer OFF. ([WEEKLY] goes out.)

NOTE:

The saved settings will not be cleared when the weekly timer is turned OFF.

2. Checking weekly timer setting

(1) Press [EDIT/SEND SET] button to enter the weekly timer setting mode.
*[SET] blinks.

(2) Press [DAY] or [1~4] buttons to view the setting of the particular day or number.

(3) Press [CANCEL] button to exit the weekly timer setting.

9-10. SMART SET (⊛) OPERATION

1. How to set SMART SET operation

(1) Press OFF/ON(stop/operate) button.

(2) Select COOL or HEAT mode.

(3) Press SMART SET button.

(4) Set the temperature, fan speed, and airflow direction for SMART SET operation.

NOTE:

- SMART SET operation cannot be selected during DRY, FAN or AUTO mode operation.
- The setting range of HEAT mode SMART SET operation is 50 – 88°F (10 – 31°C).
- 2 groups of setting can be saved. (One for COOL, one for HEAT)
- SMART SET operation and the weekly timer operation cannot be used together.
- SMART SET operation and SLEEP operation cannot be set at the same time.

2. How to cancel operation

- Press SMART SET button again.
- SMART SET operation can also be cancelled by pressing Operation select button to change the operation mode. The preferred setting can be saved for the next time with a single press of SMART SET button.

9-11. SLEEP ( ) OPERATION

1. How to set SLEEP operation

(1) Press STOP/OPERATE (OFF/ON) button.

(2) Select COOL, DRY, HEAT or FAN mode.

(3) Press SLEEP ( ) button.

(4) PRESS Temperature buttons [(Increase) and (Decrease)] to set the temperature of SLEEP operation.

Fan speed: AUTO

Horizontal vane: Position set on the remote controller

Operation indicator lamp: Dimly lit

- Once the above procedure is completed, the settings will be saved.
- After the settings are saved, a single push of SLEEP ( ) button during operation activates SLEEP operation with the same settings every time.
- Temperature for SLEEP operation cannot be set during DRY or FAN mode.

Set temperature for SLEEP operation

For about 30 minutes after SLEEP ( ) button is pressed, the set temperature remains as set for the operation running when SLEEP button is pressed. It will change to the set temperature for SLEEP operation in about 30 minutes.

Pressing SLEEP ( ) button again returns the operation to the previous settings.

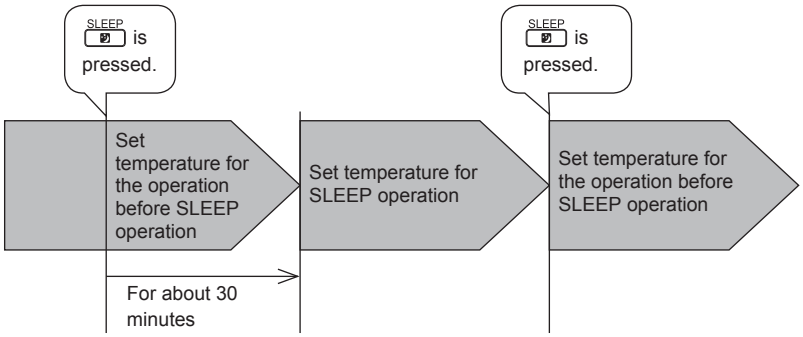

NOTE:

- ON/OFF timer is available during SLEEP operation.
- When a preset ON time for the weekly timer becomes during SLEEP operation, the weekly timer operation has priority. SLEEP operation will be cancelled, and the operation set on the weekly timer will start.

2. How to cancel operation

- Press SLEEP ( ) button again.
- The operation returns to the previous settings.
- SLEEP operation is also cancelled when the FAN button is pressed or the operation mode is changed.

NOTE: SLEEP operation and SMART SET operation cannot be set at same time.

9-12. SELF CLEAN OPERATION

SELF CLEAN operation helps to keep the unit clean by performing FAN operation for about 25 minutes. It is recommended to keep SELF CLEAN operation active at all times.

(1) Press SELF CLEAN button to activate SELF CLEAN operation.

- The unit performs SELF CLEAN operation when it is stopped with the (OFF/ON) button or OFF timer after COOL/DRY operation. Operation indicator lamp turns on. (Display section)
- SELF CLEAN operation is not performed when: COOL/DRY is operated less than 3 minutes.

(2) Press SELF CLEAN button again to deactivate SELF CLEAN operation.

- Pressing (OFF/ON) button does not deactivate SELF CLEAN operation.

NOTE:

- Fan is stopped for the first 3 minutes of SELF CLEAN operation.
- During multi system operation, air from the unit may become warm. In this case, SELF CLEAN operation is cancelled automatically to prevent undesirable rise in room temperature.

9-13. EMERGENCY/TEST OPERATION

In the case of test run operation or emergency operation, use the emergency operation switch on the right side of the indoor unit. Emergency operation is available when the remote controller is missing or has failed, or the batteries in the remote controller are running out. The unit will start and OPERATION INDICATOR lamp will light up.
The first 30 minutes of operation is the test run operation. This operation is for servicing. The indoor fan runs at High speed and the temperature control does not work.
After 30 minutes of test run operation, the system shifts to EMERGENCY COOL/HEAT MODE with a set temperature of 75°F(24°C). The fan speed shifts to Medium.
The coil frost prevention works even in the test run or the emergency operation.
In the test run or emergency operation, the horizontal vane operates in VANE AUTO (@) mode.
Emergency operation continues until the emergency operation switch is pressed once or twice or the unit receives any signal from the remote controller. In the latter case, normal operation will start.

NOTE: Do not press the emergency operation switch during normal operation.

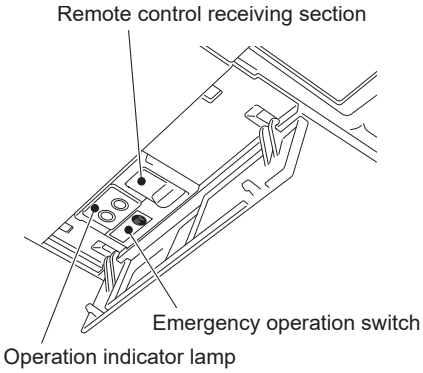

Operation mode	COOL/HEAT
Set temperature	75°F(24°C)
Fan speed	Medium
Horizontal vane	Auto

The operation mode is indicated by the Operation indicator lamp as following

Operation indicator lamp

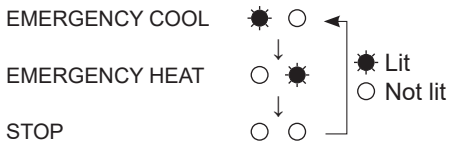

9-14. 3-MINUTE TIME DELAY OPERATION

When the system turns OFF, compressor will not restart for 3 minutes as 3-minute time delay function operates to protect compressor from overload.

9-15. Changing temperature indication (°F/°C)

- The preset unit is °F.
- °F → °C / °C → °F : Press RESET button while Temperature buttons are pressed.

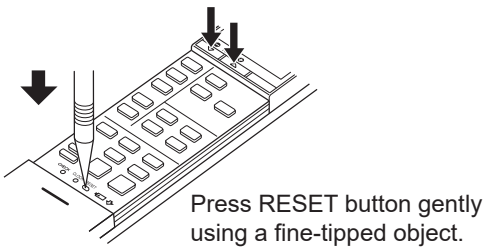

10 TROUBLESHOOTING

MLZ-KX09NL MLZ-KX12NL MLZ-KX18NL

10-1. CAUTIONS ON TROUBLESHOOTING

1. Before troubleshooting, check the following:

1) Check the power supply voltage.
2) Check the indoor/outdoor connecting wire for miswiring.

2. Take care of the following during servicing

1) Before servicing the air conditioner, be sure to turn off the unit first with the remote controller, and then after confirming the horizontal vane is closed, turn off the breaker and/or disconnect the power plug.
2) Be sure to turn OFF the power supply before removing the front panel, the cabinet, the top panel, and the electronic control P.C. board.
3) When removing the electronic control P.C. board, hold the edge of the board with care NOT to apply stress on the components.
4) When connecting or disconnecting the connectors, hold the connector housing. DO NOT pull the lead wires.

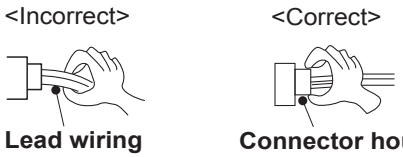

3. Troubleshooting procedure

1) Check if the OPERATION INDICATOR lamp on the indoor unit is blinking ON and OFF to indicate an abnormality. To make sure, check how many times the OPERATIONAL INDICATOR lamp is blinking ON and OFF before starting service work.
2) Before servicing, verify that all connectors and terminals are connected properly.
3) When the electronic control P.C. board seems to be defective, check for disconnection of the copper foil pattern and burnt or discolored components.
4) Refer to 10-2, 10-3 and 10-4.

4. How to replace batteries

Weak batteries may cause the remote controller malfunction.
In this case, replace the batteries to operate the remote controller normally.

① Remove the front lid and insert batteries. Then reattach the front lid.

② Press RESET button with a fine-tipped object, and then use the remote controller.

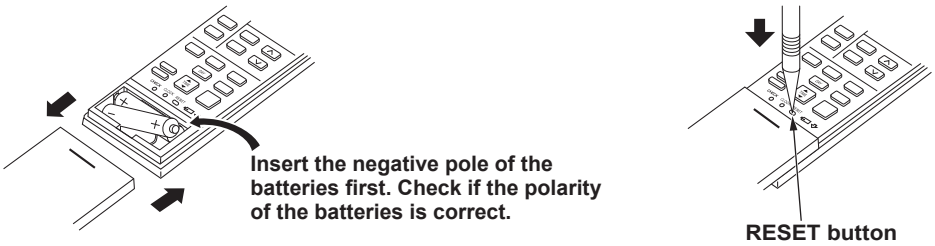

NOTE: 1. If RESET button is not pressed, the remote controller may not operate correctly.
2. This remote controller has a circuit to automatically reset the microprocessor when batteries are replaced. This function is equipped to prevent the microprocessor from malfunctioning due to the voltage drop caused by the battery replacement.
3. Do not use the leaking batteries.

INFORMATION FOR MULTI SYSTEM AIR CONDITIONER

OUTDOOR UNIT : MXZ series

Multi system air conditioner can connect two or more indoor units with one outdoor unit.

- Unit will not operate in case the total capacity of indoor units exceeds the capacity of outdoor units. Do not connect indoor units beyond the outdoor unit capacity. Operation indicator lamp blinks as shown in the figure below.
- When you try to operate two or more indoor units with one outdoor unit simultaneously, one for the cooling and the other for heating, the operation mode of the indoor unit that operates earlier is selected. The other indoor units cannot operate and indicate as shown in the figure below. In this case, set all the indoor units to the same operation mode.

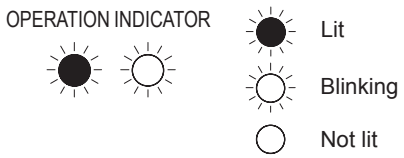

- When indoor units start operation while the defrosting of outdoor unit is being done, it takes a few minutes (maximum 10 minutes) to blow out the warm air.
- In the heating operation, though indoor unit that does not operate may get warm or the sound of refrigerant flowing may be heard, they are not malfunction. The reason is that the refrigerant continuously flows into it.

10-2. FAILURE MODE RECALL FUNCTION AND ERROR CODE DISPLAY MODE

Outline of the function

This air conditioner can memorize the failure which has occurred last time.

Even though LED indication listed on the troubleshooting check table (10-4.) disappears, the memorized failure can be recalled.

Also, error code can be checked on the display of remote controller while the left operation indicator lamp on the indoor unit is blinking.

1. Flow chart of failure mode recall function for the indoor/outdoor unit

Operational procedure

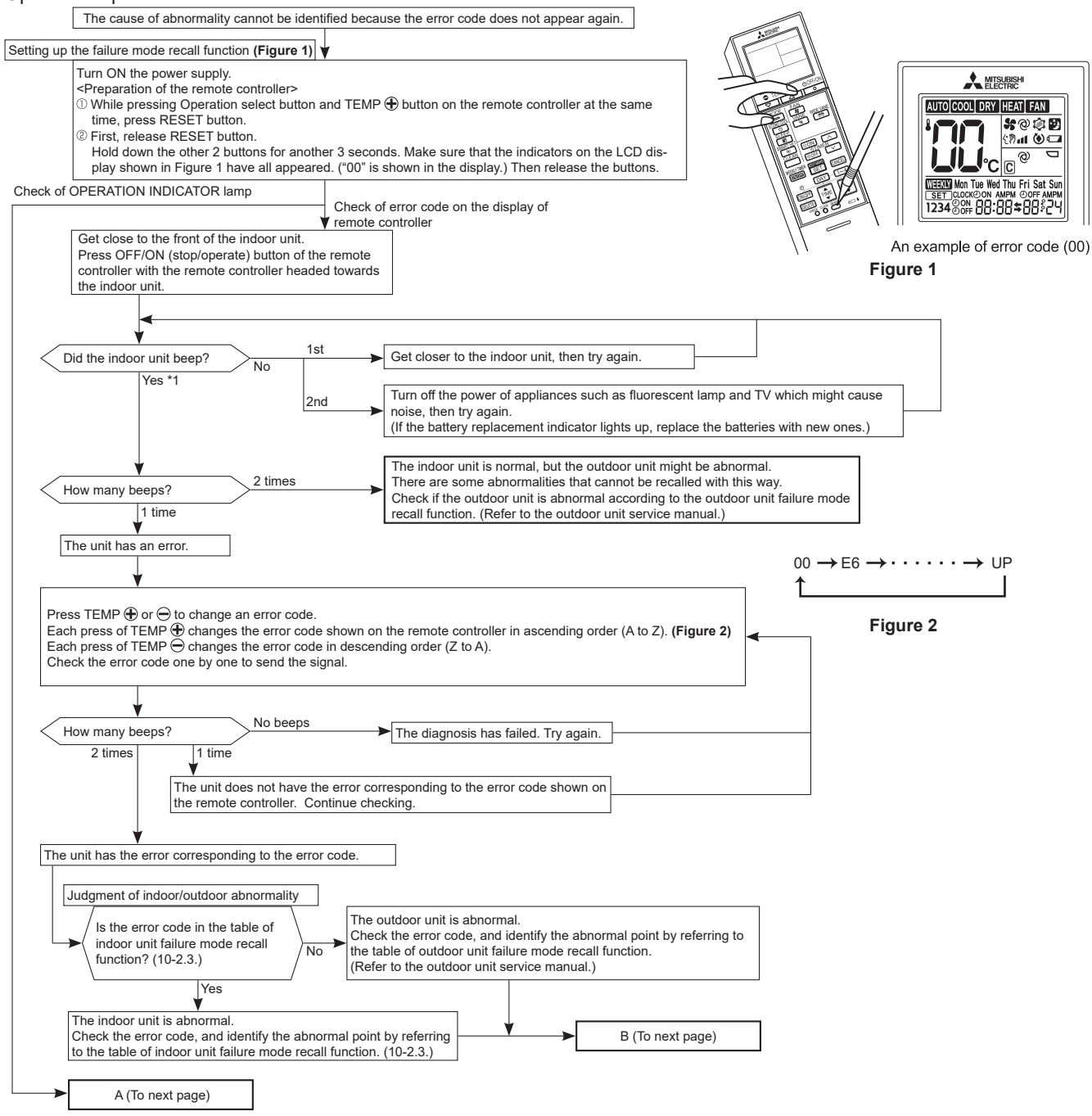

A (From previous page)

Press OFF/ON (stop/operate) button of the remote controller with the remote controller headed towards the indoor unit. *1.

Does the left OPERATION INDICATOR lamp on the indoor unit blink at the interval of 0.5 seconds?

No (OFF) → The indoor unit is normal, but the outdoor unit might be abnormal.
There are some abnormalities that cannot be recalled with this way.
Check if the outdoor unit is abnormal according to the outdoor unit failure mode recall function. (Refer to the outdoor unit service manual.)

NOTE: It takes up to 1 minute to indicate the outdoor unit abnormality.
Even if the OPERATION INDICATOR lamp is not blinking, keep checking at least 1 minute or longer.

Yes (Blinks)

Judgment of indoor/outdoor abnormality

Before blinking, does the left OPERATION INDICATOR lamp stay ON for 3 seconds?

Yes → The outdoor unit is abnormal.
Check the blinking pattern, and identify the abnormal point by referring to the table of outdoor unit failure mode recall function.
(Refer to outdoor unit service manual.)
Make sure to check at least 2 consecutive blinking cycles. *3

No → The indoor unit is abnormal.
Check the blinking pattern, and identify the abnormal point by referring to the table of indoor unit failure mode recall function. (10-2.3.)
Make sure to check at least 2 consecutive blinking cycles. *2

B (From previous page)

Releasing the failure mode recall function

Release the failure mode recall function by the following procedures.
Turn OFF the power supply and turn it ON again.
Press RESET button of the remote controller.

Repair the failure parts.

Deleting the memorized abnormal condition

① After repairing the unit, recall the failure mode again according to “Setting up the failure mode recall function” mentioned above.
② Press OFF/ON (stop/operate) button of the remote controller with the remote controller headed towards the indoor unit.
③ Press the emergency operation switch so that the memorized abnormal condition is deleted.
④ Release the failure mode recall function according to “Releasing the failure mode recall function” mentioned above.

NOTE: 1. Make sure to release the failure mode recall function after it is set up, otherwise the unit cannot operate properly.
2. If the abnormal condition is not deleted from the memory, the last abnormal condition is kept memorized.

*1. Regardless of normal or abnormal condition, a short beep is emitted once the signal is received.

*2. Blinking pattern when the indoor unit is abnormal:

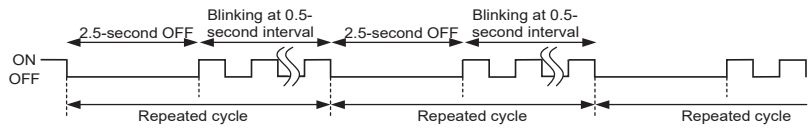

*3. Blinking pattern when the outdoor unit is abnormal:

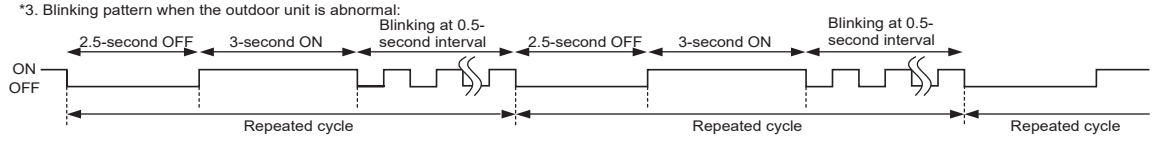

2. Flow chart of error code display mode

This explains how customers can check the error code on their own.
This is included in OPERATING INSTRUCTIONS.

Operational procedure

The remote controller is powered OFF.

Get close to the front of the indoor unit. Point the remote controller at the receiving section of the indoor unit, and keep pressing CHECK with a fine-tipped object. **(Figure 1)**
"00" is shown in the display. **(Figure 2)**
Keep pointing the remote controller at the receiving section of the indoor unit until the indoor unit beeps.

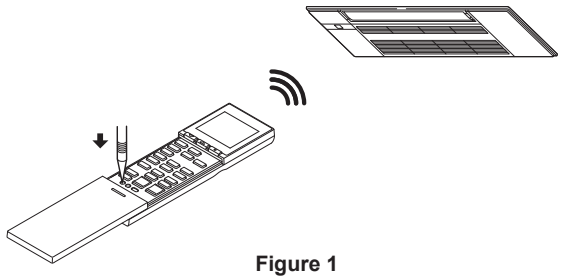

Figure 1

Did the indoor unit beep?

- No, 1st → Get closer to the indoor unit, then try again.
- No, 2nd → Turn off the power of appliances such as fluorescent lamp and TV which might cause noise, then try again.
  (If the battery replacement indicator lights up, replace the batteries with new ones.)
- Yes ↓

How many beeps?

- 2 times → The indoor unit is normal, but the outdoor unit might be abnormal. There are some abnormalities that cannot be recalled with this way. Check if the outdoor unit is abnormal according to the outdoor unit failure mode recall function. (Refer to the outdoor unit service manual.)
- 1 time ↓

The unit has an error.

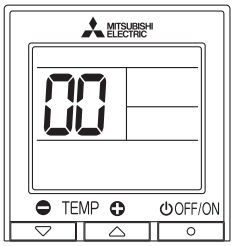

Figure 2

NOTE: Even though the air conditioner operates normally, the memorized indication for the last error appears if it has not been deleted.

Press TEMP ⊕ or ⊖ to change an error code.
Each press of TEMP ⊕ changes the error code shown on the remote controller in ascending order (A to Z).
(Figure 3)
Each press oTEMP ⊖ changes the error code in descending order (Z to A).
Check the error code one by one to send the signal.

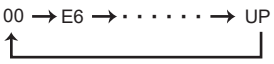

Figure 3

How many beeps?

- No beeps → The diagnosis has failed. Try again.
- 1 time → The unit does not have the error corresponding to the error code shown on the remote controller. Continue checking.
- 2 times ↓

The unit has the error corresponding to the error code.

Refer to the error code on the table of indoor unit failure mode recall function (10-2.3.) or the table of outdoor unit failure mode recall function (refer to the outdoor unit service manual).

3. Table of indoor unit failure mode recall function

Left OPERATION INDICATOR lamp	Error code	Abnormal point (Failure mode)	Condition	Remedy
Not blink	00	Normal	—	—
1-time blink every 0.5-second	P1	Room temperature thermistor	The room temperature thermistor short or open circuit is detected every 8 seconds during operation.	Refer to the characteristics of the room temperature thermistor (10-7).
2-time blink 2.5-second OFF	P2 P9	Indoor coil thermistor (Main 1, 2 and sub) **[Main 2: MLZ-KX18NL]**	The indoor coil thermistor short or open circuit is detected every 8 seconds during operation.	Refer to the characteristics of the main indoor coil thermistor, the sub indoor coil thermistor (10-7).
3-time blink 2.5-second OFF	E6 E7	Serial signal	The serial signal from outdoor unit is not received for a maximum time of 6 minutes.	• Refer to 10-6. Ⓓ "How to check miswiring and serial signal error". • Refer to "Check of compressor protector" of outdoor unit service manual.
5-time blink 2.5-second OFF	P5	Drain pump Float sensor	• Float sensor is open. • Float sensor detects abnormal water level.	• Check the float sensor and the drain pump. • Check the connectors of float sensor and the drain pump. • Refer to 10-6. Ⓔ "Check of float sensor ".
7-time blink 2.5-second OFF	EE	Combination of indoor and outdoor units	The refrigerant types specified for the indoor and outdoor units do not match.	The refrigerant types specified for the indoor and outdoor units do not match.
11-time blink 2.5-second OFF	Pb	Indoor fan motor	The rotational frequency feedback signal is not emitted for the 12 seconds after the indoor fan is operated.	Refer to 10-6.Ⓐ "Check of indoor fan motor".
12-time blink 2.5-second OFF	Fb	Indoor control system	It cannot properly read data in the nonvolatile memory of the indoor electronic control P.C. board.	Replace the indoor electronic control P.C. board. "EE" error may be detected together with "Fb" error for the outdoor unit. When the indoor and outdoor units are connected in the allowed combination, respond only to "Fb" error.
13-time blink 2.5-second OFF	Pd	Indoor coil thermistor (Main 3) **[MLZ-KX18NL]**	When the indoor coil thermistor short or open circuit is detected every 8 seconds during operation.	Refer to the characteristic of the main 3 indoor coil thermistor (10-7).
14-time blink 2.5-second OFF	FL	Refrigerant leakage Abnormal if refrigerant leakage detected by a refrigerant sensor.	1. Refrigerant leaks from the piping or the heat exchanger in the indoor unit. 2. The following items are used around the indoor unit. • Spray (LP gas including Freon, and whose main ingredient is propane and butane) • Aerosol insecticide (including ethanol) • Air spray painting (including dichloromethane) • Charcoal (charcoal fire) • Chemicals (such as ethanol) 3. Refrigerant leaks from piping or heat exchangers, or sensor errors in indoor units in other rooms.	• While the error message is displayed, the indoor unit continues fan operation. • Please turn off the power supply after ventilating the room sufficiently and confirming that there is no ignition source. • Check the indoor unit to detect the part where refrigerant leaks. • Repair the part where refrigerant leaks. • Turn on the power again. • Replace the refrigerant sensor if the problem is not fixed.
	FH	Refrigerant sensor error Abnormal if refrigerant sensor cannot detect errors normally. (Sensor detection)	1. The refrigerant sensor mounted on the indoor unit does not work. 2. The refrigerant sensor is not connected properly or the wire is broken.	Connect the connector of the refrigerant sensor properly. Replace the refrigerant sensor.

NOTE: Blinking patterns of this mode differ from the ones of TROUBLESHOOTING CHECK TABLE (10-4).

10-3. INSTRUCTION OF TROUBLESHOOTING

1. Check of the unit

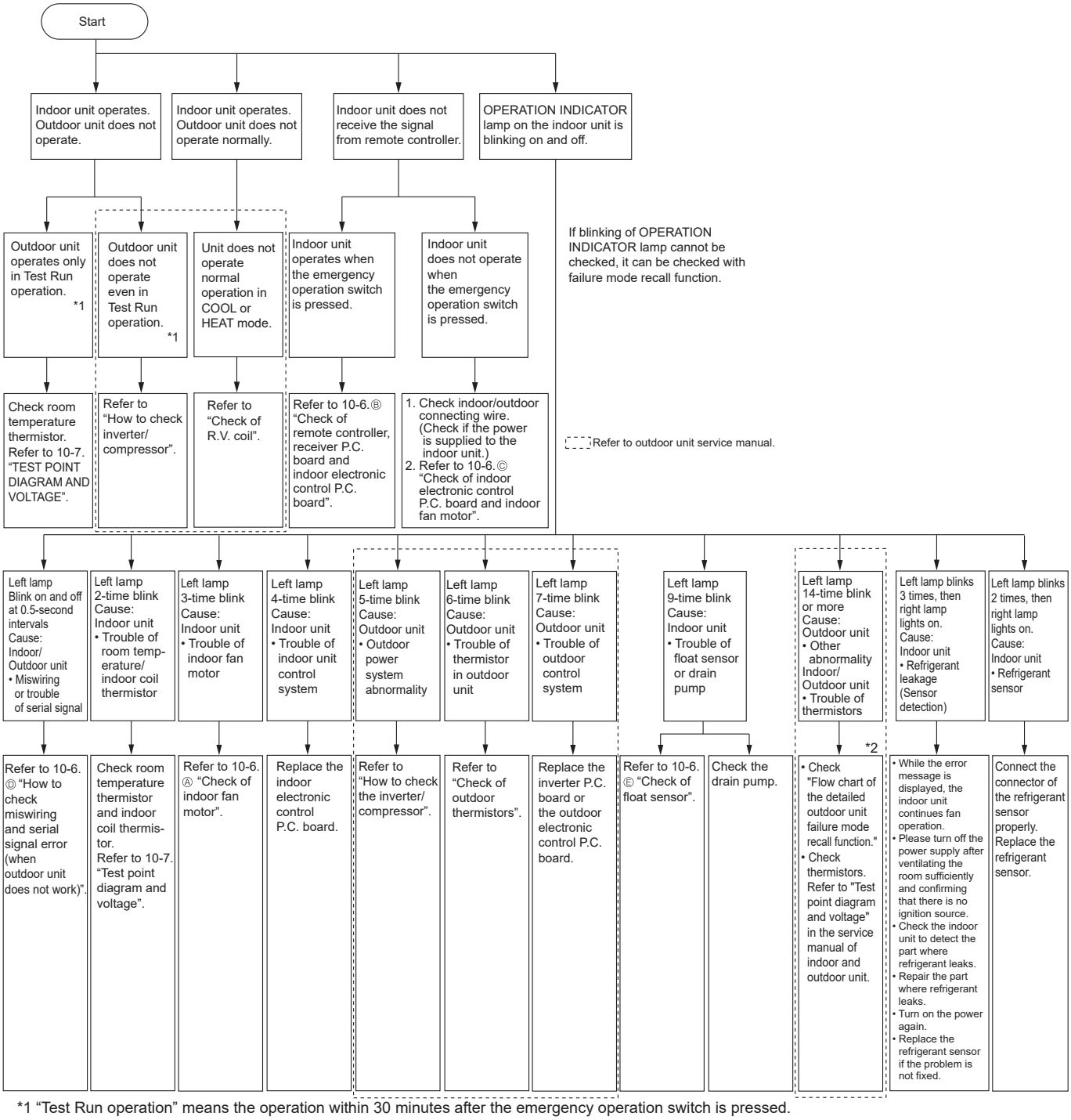

*1 "Test Run operation" means the operation within 30 minutes after the emergency operation switch is pressed.

*2 There is possibility that diesel explosion may occur due to the air mixed in the refrigerant circuit.
First, ensure that there are no leakage points on the valves, flare connections, etc. that allow the air to flow into the refrigerant circuit, or no blockage points (e.g. clogged or closed valves) in the refrigerant circuit that cause an increase in pressure.
If there is no abnormal point like above and the system operates cooling and heating modes normally, the indoor thermistor might have a problem, resulting in false detection.
Check both the indoor coil thermistor and the room temperature thermistor, and replace faulty thermistor(s), if any.
NOTE: Do not start the operation again without repair to prevent hazards.

2. Check of Wireless LAN module

Follow the procedure below if the air conditioner cannot be monitored or controlled with a device such as a smartphone.

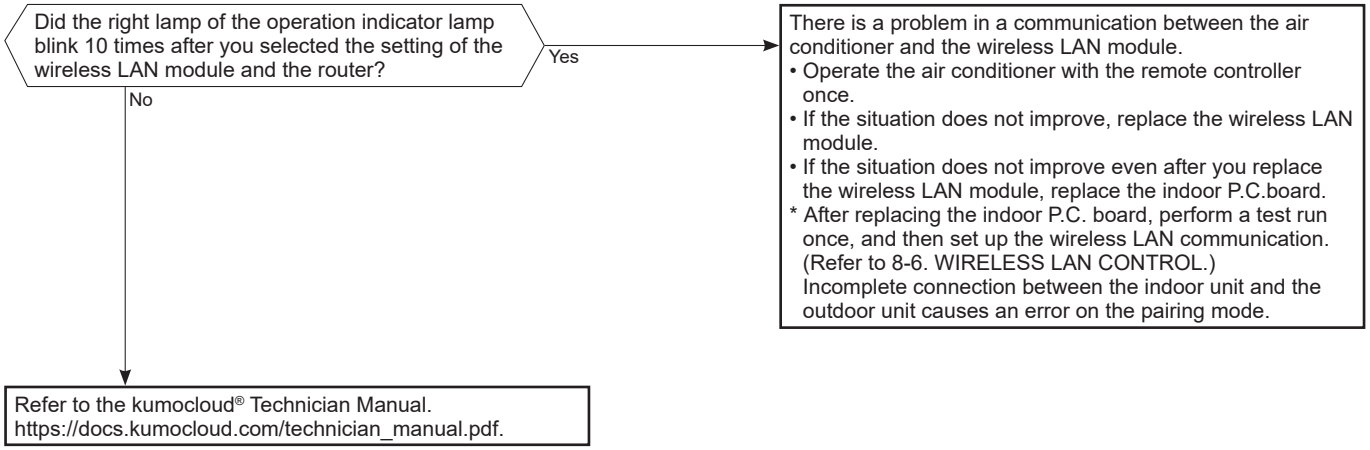

10-4. TROUBLESHOOTING CHECK TABLE

OPERATION INDICATOR

• Blinking of OPERATION INDICATOR lamp (left-hand side lamp) indicates abnormalities.

NOTE: Before taking measures, make sure that the symptom reappears for accurate troubleshooting.

Self check table

No.	Abnormal point	Operation indicator lamp	Symptom	Condition	Remedy
1	Miswiring or serial signal	Left lamp blinks. 0.5-second ON 0.5-second OFF	Indoor unit and outdoor unit do not operate.	When the serial signal from the outdoor unit is not received for a maximum of 6 minutes.	• Refer to 10-6.Ⓓ "How to check miswiring and serial signal error".
2	Indoor coil thermistor Room temperature thermistor	Left lamp blinks. 2-time blink 2.5-second OFF	Indoor unit and outdoor unit do not operate.	When the indoor coil or the room temperature thermistor is shorts or opens circuit.	• Refer to the characteristics of indoor coil thermistor, and the room temperature thermistor on 10-7.
3	Indoor fan motor	Left lamp blinks. 3-time blink 2.5-second OFF	Indoor unit and outdoor unit do not operate.	When the rotational frequency feedback signal is not emitted during the indoor fan operation.	• Refer to 10-6. Ⓐ"Check of indoor fan motor".
4	Indoor control system	Left lamp blinks. 4-time blink 2.5-second OFF	Indoor unit and outdoor unit do not operate.	When it cannot properly read data in the nonvolatile memory of the indoor electronic control P.C. board.	• Replace the indoor electronic control P.C. board.
5	Outdoor power system	Left lamp blinks. 5-time blink 2.5-second OFF	Indoor unit and outdoor unit do not operate.	The compressor stops 3 times consecutively for over current protection or start-up failure protection within 1 minute after start-up.	• Refer to "Check of inverter/ compressor". • Check the stop valve. Refer to outdoor unit service manual.
6	Outdoor thermistors	Left lamp blinks. 6-time blink 2.5-second OFF	Indoor unit and outdoor unit do not operate.	When the outdoor thermistors short or open circuit during the compressor operation.	• Refer to "Check of outdoor thermistor". Refer to outdoor unit service manual.
7	Outdoor control system	Left lamp blinks. 7-time blink 2.5-second OFF	Indoor unit and outdoor unit do not operate.	When it cannot properly read data in the nonvolatile memory of the inverter P.C. board or the outdoor electronic control P.C. board.	• Replace the inverter P.C. board or the outdoor electronic control P.C. board. Refer to outdoor unit service manual.
8	Drain pump	Left lamp blinks. 9-time blink 2.5-second OFF	Indoor unit and outdoor unit do not operate.	• Float sensor is open. • Float sensor detects abnormal water level.	• Check the float sensor characteristics. • Check the drain pump. • Check the drain pipe. • Check the connectors of float sensor and the drain pump. • Refer to 10-6. Ⓔ"Check of float sensor".
9	Other abnormality	Left lamp blinks. 14-time blink or more 2.5-second OFF	Indoor unit and outdoor unit do not operate.	An abnormality other than above mentioned is detected.	• Check the abnormality in detail using the failure mode recall function. Refer to outdoor unit service manual.

NOTE: When the indoor unit has started operation and the above failures are detected (the first detection after the power ON), the indoor electronic control P.C. board turns OFF the indoor fan motor with OPERATION INDICATOR lamp blinking.

No.	Abnormal point	Operation indicator lamp	Symptom	Condition	Remedy
10	Refrigerant leakage (Sensor detection)	Left lamp blinks 3 times, then right lamp lights on. Left lamp ●○●○●○○○○○○● 3.0-second OFF Right lamp ○○○○○●●●●●●○ 3.0-second ON	• The buzzer sounds. • FAN operation starts, and the air blows upward from the horizontal vane. • It cannot be controlled by the remote controller.	1. Refrigerant leaks from the piping or the heat exchanger in the indoor unit. 2. The following items are used around the indoor unit. • Spray (LP gas including Freon, and whose main ingredient is propane and butane) • Aerosol insecticide (including ethanol) • Air spray painting (including dichloromethane) • Charcoal (charcoal fire) • Chemicals (such as ethanol) 3. Refrigerant leaks from piping or heat exchangers.	• Press and hold the emergency operation button to turn off the buzzer. • While the error message is displayed, the indoor unit continues fan operation. • Please turn off the power supply after ventilating the room sufficiently and confirming that there is no ignition source. • Check the indoor unit to detect the part where refrigerant leaks. • Repair the part where refrigerant leaks. • Turn on the power again. • Replace the refrigerant sensor if the problem is not fixed.
11	Refrigerant sensor eroor	Left lamp blinks 2 times, then right lamp lights on. Left lamp ●○●○○○○○○○● 3.0-second OFF Right lamp ○○○●●●●●●○ 3.0-second ON	• Indoor unit and outdoor unit do not operate. • FAN operation starts, and the air blows upward from the horizontal vane. • It cannot be controlled by the remote controller.	1. The refrigerant sensor mounted on the indoor unit does not work. 2. The refrigerant sensor is not connected properly or the wire is broken.	• While the error message is displayed, the indoor unit continues fan operation. • Please turn off the power supply after ventilating the room sufficiently and confirming that there is no ignition source. • Check the connection of some parts such as connectors and turn the power on again. • When the error has not been cleared, replace the refrigerant sensor.

NOTE: When the indoor unit has started operation and the above failures are detected (the first detection after the power ON), the indoor electronic control P.C. board turns OFF the indoor fan motor with OPERATION INDICATOR lamp blinking.

OPERATION INDICATOR

Lit

Blinking

Not lit

· Blinking of OPERATION INDICATOR lamp (right-hand side lamp) indicates abnormality.
· OPERATION INDICATOR lamp (left-hand side lamp) is lighted.

No.	Abnormal point	Operation indicator lamp	Symptom	Condition	Remedy
1	**MXZ type** Operation mode setting	Right lamp blinks. ●○○○○○○●○○○○○● 2.5-second OFF	Outdoor unit operates but indoor unit does not operate.	When the operation mode of the each indoor unit is differently set to COOL (includes DRY) and HEAT at the same time, the operation mode of the indoor unit that has operated at first has the priority.	• Unify the operation mode. Refer to outdoor unit service manual.

NOTE: When the indoor unit has started operation and the above failures are detected (the first detection after the power ON), the indoor electronic control P.C. board turns OFF the indoor fan motor with OPERATION INDICATOR lamp blinking.

FL: Refrigerant leakage

Abnormal points and detection methods

Refrigerant is leaking from the air conditioner.
The refrigerant sensor has detected refrigerant leak.
Refrigerant is leaking in the room where the alarm is beeping. (Optional)
A refrigerant sensor has failed.

Causes and checkpoints

- Refrigerant leak from air conditioner
- Refrigerant leak from piping
- False detection (The refrigerant sensor reacted to other gas.)

Notes:

- When this error occurs, both of the alarm in the applicable room and the supervisor mode alarm beep. Also, the system closes the shut-off valve and performs refrigerant recovery.
- When this error occurs, ventilate the room.
- When this error occurs, do not turn off the power until the fan in the outdoor unit stops.

Diagnosis of failure

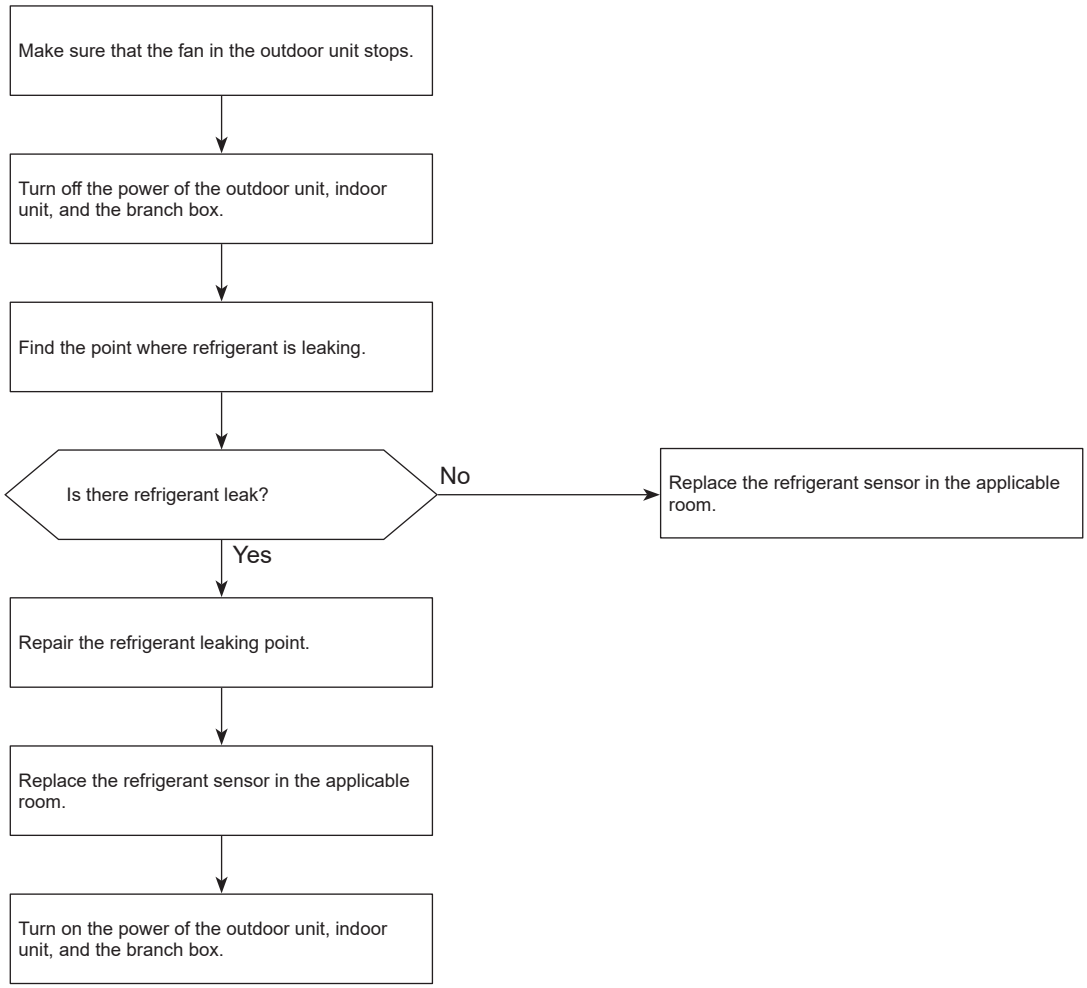

FH: Refrigerant sensor error

Abnormal points and detection methods

A refrigerant sensor has failed.

Causes and checkpoints

- A refrigerant sensor connected to an M-IC has failed.
- A Sensor and Alarm Kit connected to a branch box has failed.

Diagnosis of failure

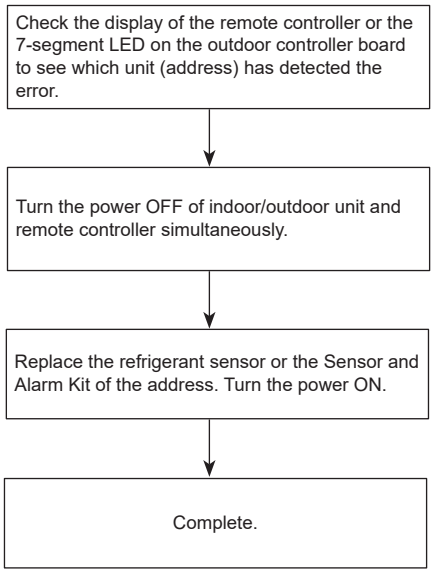

10-5. TROUBLESHOOTING CRITERION OF MAIN PARTS

MLZ-KX09NL MLZ-KX12NL MLZ-KX18NL

<table>
<tr><th>Part name</th><th>Check method and criteria</th><th>Figure</th></tr>
<tr><td>Room temperature thermistor (RT11)
Indoor coil thermistor (RT12,RT14,RT15 (MAIN), RT13 (SUB))</td><td>Measure the resistance with a multimeter.
[Part temperature 50°F – 86°F (10°C – 30°C)]
<table><tr><th>Normal</th></tr><tr><td>8 kΩ – 20 kΩ</td></tr></table></td><td></td></tr>
<tr><td>Indoor fan motor</td><td>Check 10-6.Ⓐ.</td><td></td></tr>
<tr><td>Float sensor (FS)</td><td>Disconnect connector and check with a multimeter.
Check open or short according to the float position.
<table><tr><td>Float position</td><td>Float sensor

Float</td><td>Float sensor

Float</td></tr><tr><td>Normal</td><td>Short</td><td>Open</td></tr></table></td><td></td></tr>
<tr><td>Drain pump (DP)</td><td>Measure the resistance between the terminals with a multimeter.
[Part temperature 50°F – 86°F (10°C – 30°C)]
<table><tr><th>Color of the lead wire</th><th>Normal</th></tr><tr><td>BLUE-BLUE (Drain pump side)</td><td rowspan="2">520Ω – 620Ω</td></tr><tr><td>RED-RED (Control P.C. board side)</td></tr></table></td><td></td></tr>
<tr><td>Horizontal vane motor (MV1)</td><td>Measure the resistance between the terminals with a multimeter.
[Part temperature 68°F – 86°F (20°C – 30°C)]
<table><tr><th>Color of the lead wire</th><th>Normal</th></tr><tr><td>RED-YLW</td><td>Each phase 300Ω</td></tr></table></td><td rowspan="2"> 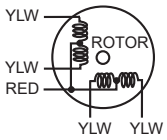 </td></tr>
<tr><td>Vertical vane motor (MV2)</td><td>Measure the resistance between the terminals with a multimeter.
[Part temperature 68°F – 86°F (20°C – 30°C)]
<table><tr><th>Color of the lead wire</th><th>Normal</th></tr><tr><td>RED-YLW</td><td>Each phase 300Ω</td></tr></table></td></tr>
</table>

10-6. TROUBLESHOOTING FLOW

When the left lamp of OPERATION INDICATOR lamp blinks 3 times and the right lamp of OPERATION INDICATOR lamp is not lighted, indoor fan does not operate.

Ⓐ Check of indoor fan motor

The indoor fan motor error has occurred, and the indoor fan does not operate.

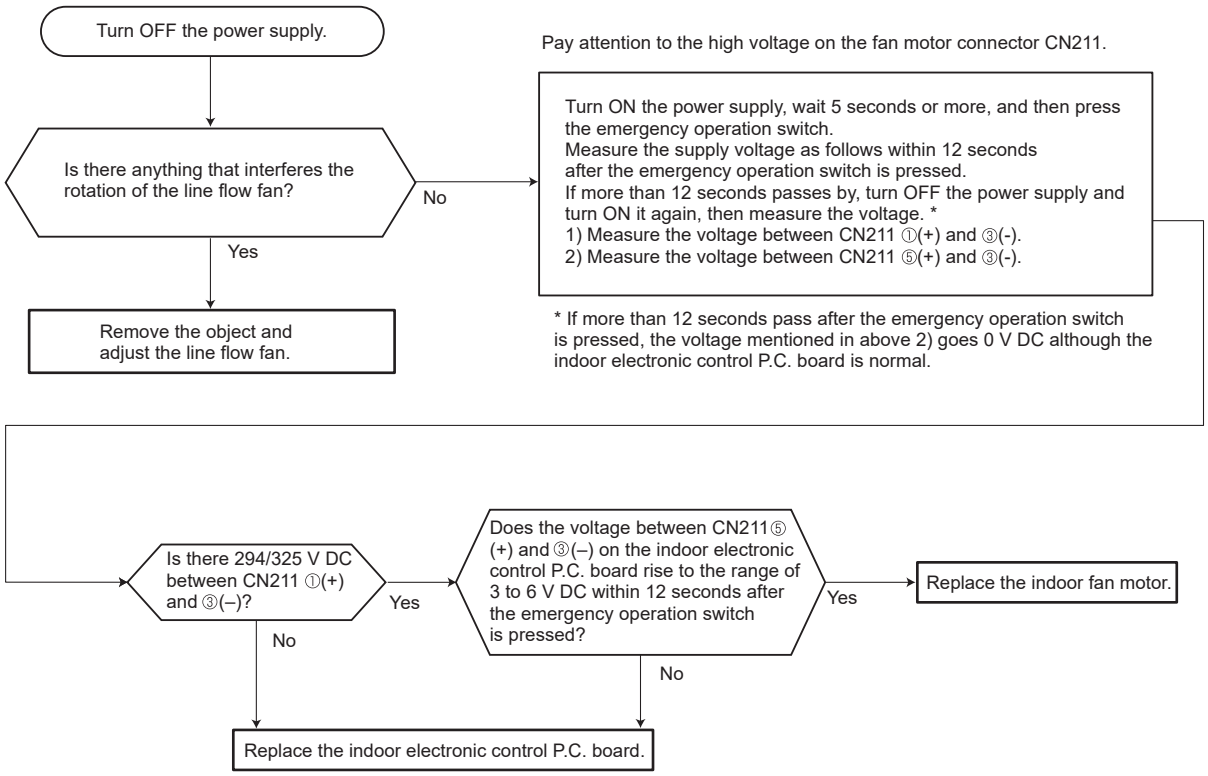

The indoor fan motor error has occurred, and the indoor fan repeats "12-second ON and 30-second OFF" 3 times, and then stops.

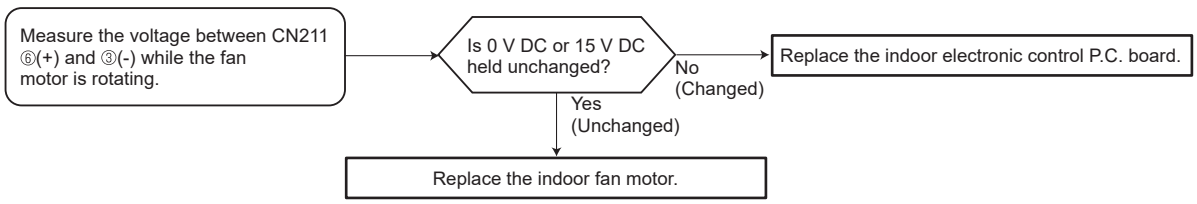

Indoor electronic control P.C. Board

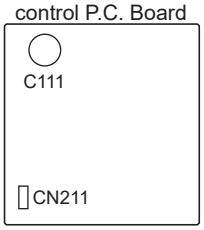

Indoor unit operates by pressing the emergency operation switch, but does not operate with the remote controller.

Ⓑ Check of remote controller, receiver P.C. board and indoor electronic control P.C. board

* Check if the remote controller is exclusive for this air conditioner.

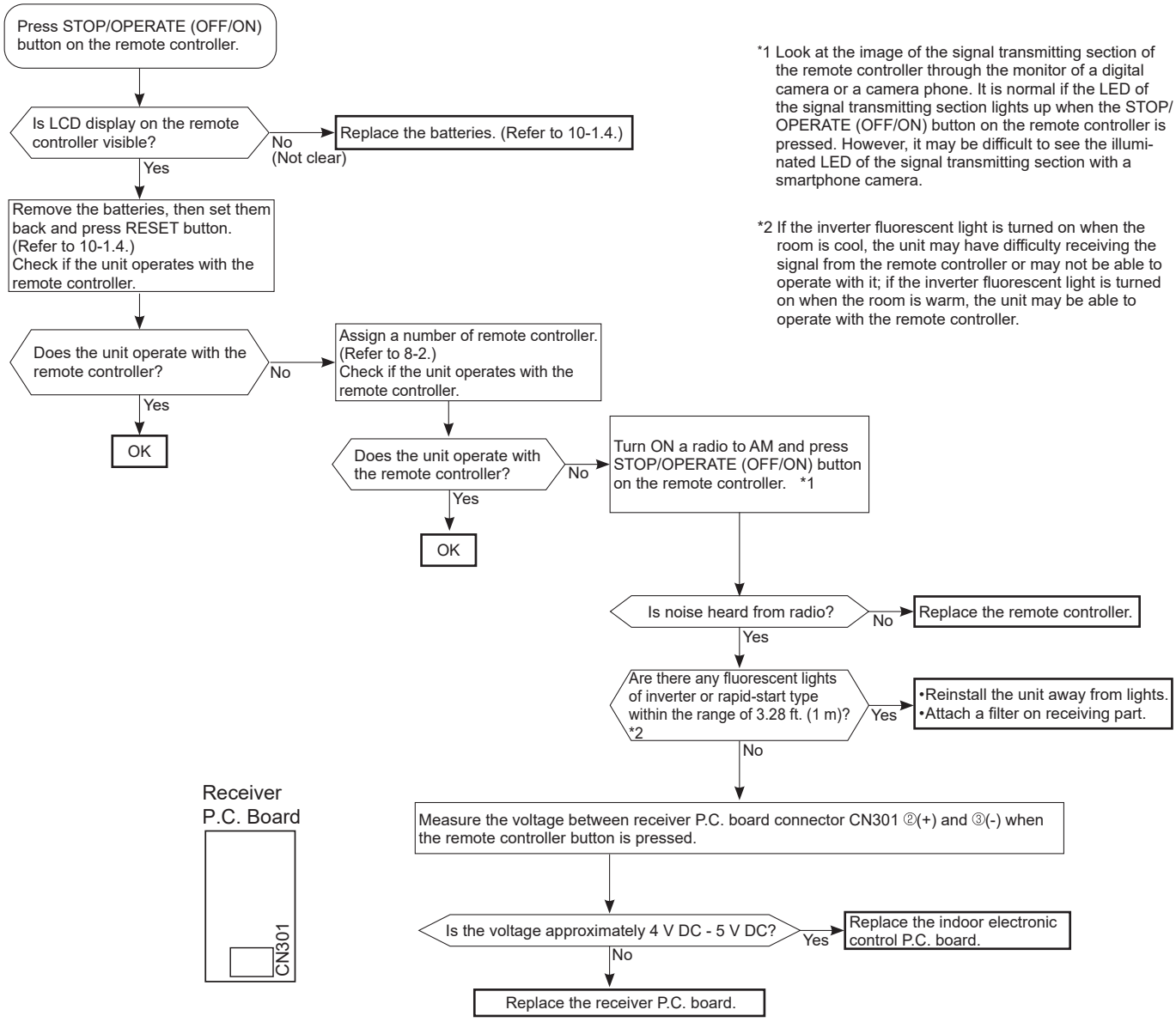

*1 Look at the image of the signal transmitting section of the remote controller through the monitor of a digital camera or a camera phone. It is normal if the LED of the signal transmitting section lights up when the STOP/OPERATE (OFF/ON) button on the remote controller is pressed. However, it may be difficult to see the illuminated LED of the signal transmitting section with a smartphone camera.

*2 If the inverter fluorescent light is turned on when the room is cool, the unit may have difficulty receiving the signal from the remote controller or may not be able to operate with it; if the inverter fluorescent light is turned on when the room is warm, the unit may be able to operate with the remote controller.

The unit cannot be operated with the remote controller.
Also, OPERATION INDICATOR lamp does not light up by pressing the emergency operation switch.

Ⓒ Check of indoor electronic control P.C. board and indoor fan motor

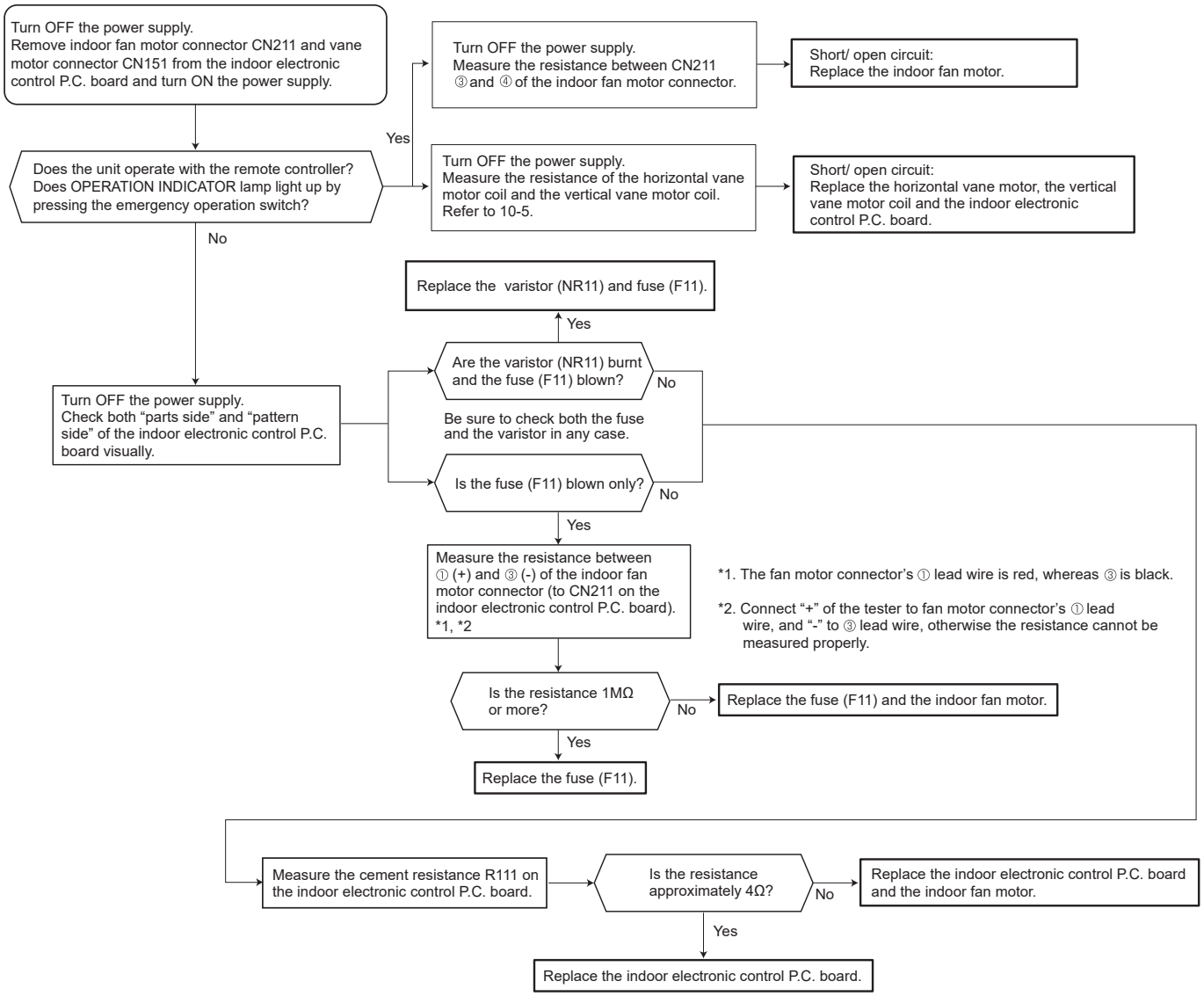

Indoor electronic control P.C. Board

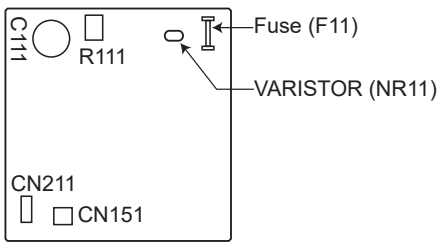

When the left lamp of OPERATION INDICATOR lamp blinks ON and OFF in every 0.5-second, outdoor unit does not operate.

Ⓓ How to check miswiring and serial signal error

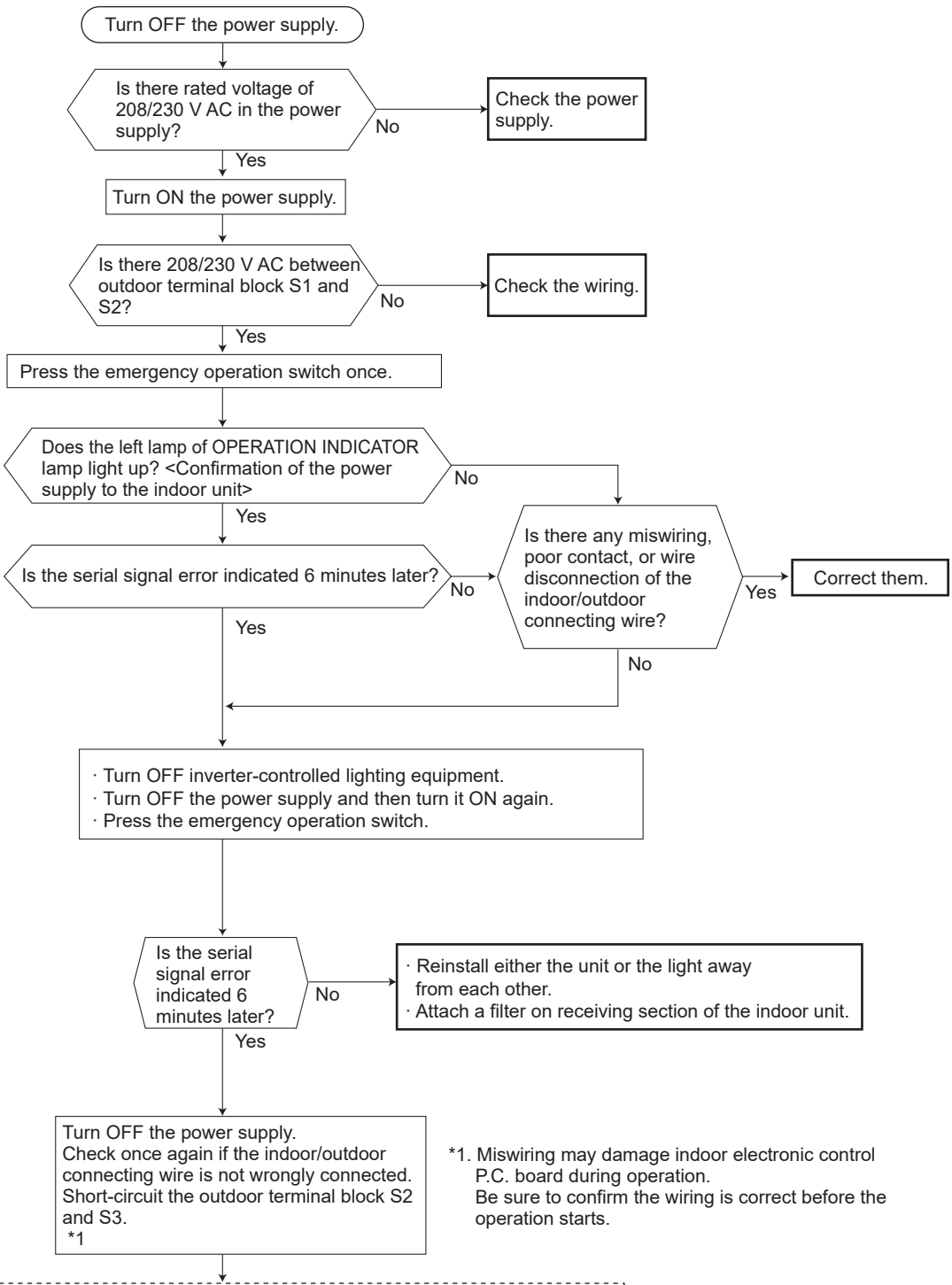

When the left lamp of OPERATION INDICATOR lamp blinks 9-time, indoor unit and outdoor unit do not operate.

Ⓔ Check of float sensor

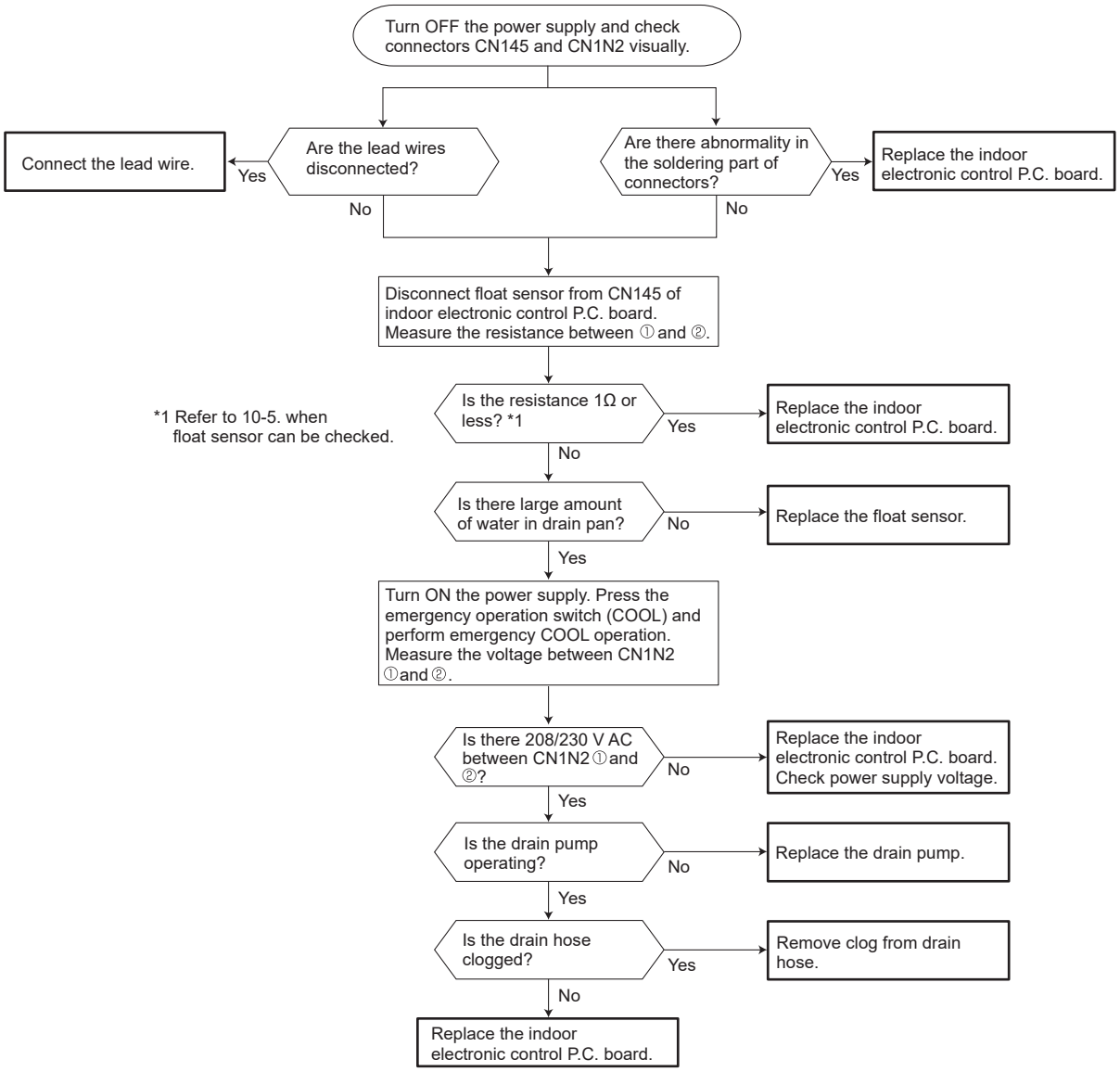

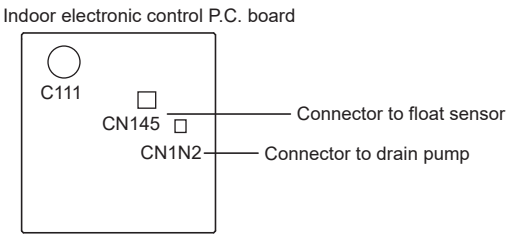

Ⓕ Electromagnetic noise enters into TV sets or radios

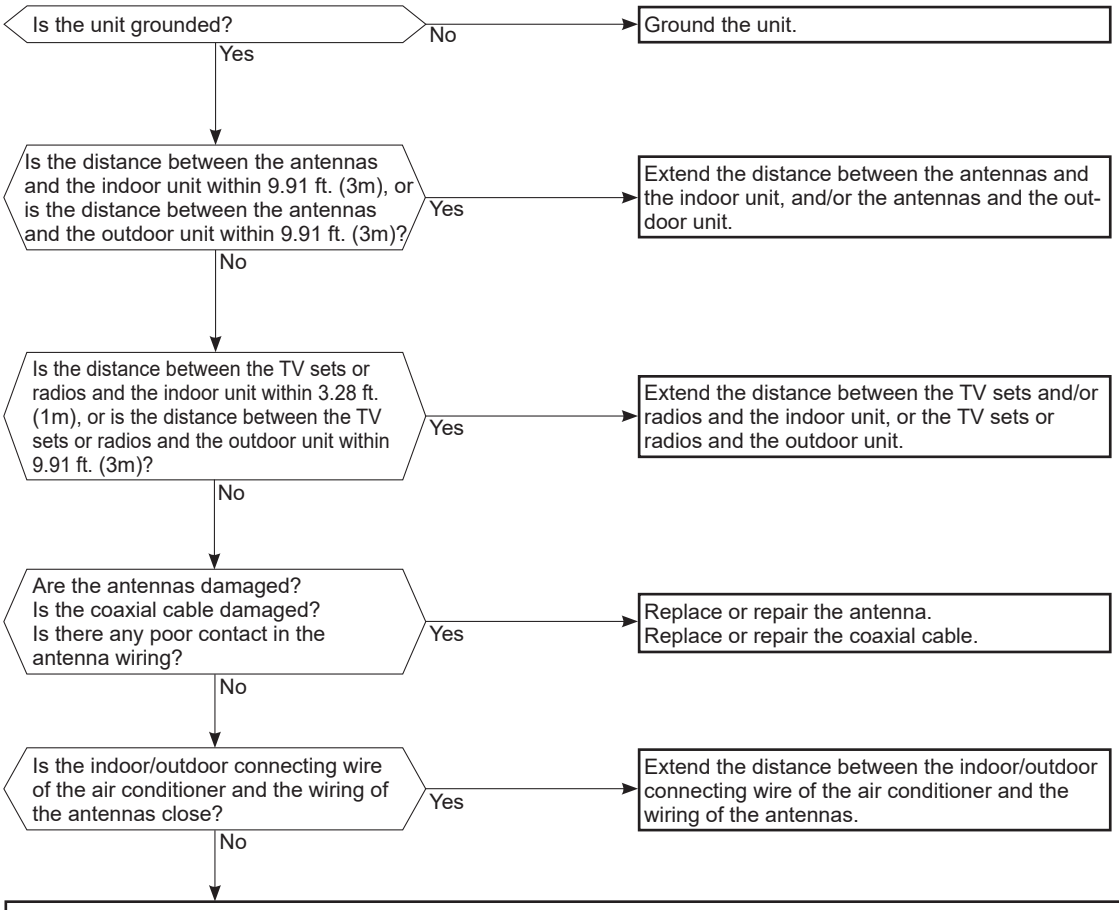

Even if all of the above conditions are fulfilled, the electromagnetic noise may enter, depending on the electric field strength or the installation condition (combination of specific conditions such as antennas or wiring).
Check the following before asking for service.

1. Devices affected by the electromagnetic noise
   TV sets, radios (FM/AM broadcast, shortwave)
2. Channel, frequency, broadcast station affected by the electromagnetic noise
3. Channel, frequency, broadcast station unaffected by the electromagnetic noise
4. Layout of:
   indoor/outdoor unit of the air conditioner, indoor/outdoor wiring, ground wire, antennas, wiring from antennas, receiver
5. Electric field intensity of the broadcast station affected by the electromagnetic noise
6. Presence or absence of amplifier such as booster
7. Operation condition of air conditioner when the electromagnetic noise enters in
   1) Turn OFF the power supply once, and then turn ON the power supply. In this situation, check for the electromagnetic noise.
   2) Within 3 minutes after turning ON the power supply, press STOP/OPERATE (OFF/ON) button on the remote controller for power ON, and check for the electromagnetic noise.
   3) After a short time (3 minutes later after turning ON), the outdoor unit starts running. During operation, check for the electromagnetic noise.
   4) Press STOP/OPERATE (OFF/ON) button on the remote controller for power OFF, when the outdoor unit stops but the indoor/outdoor communication still runs on. In this situation, check for the electromagnetic noise.

10-7. TEST POINT DIAGRAM AND VOLTAGE

MLZ-KX09NL MLZ-KX12NL MLZ-KX18NL

Indoor electronic control P.C. board

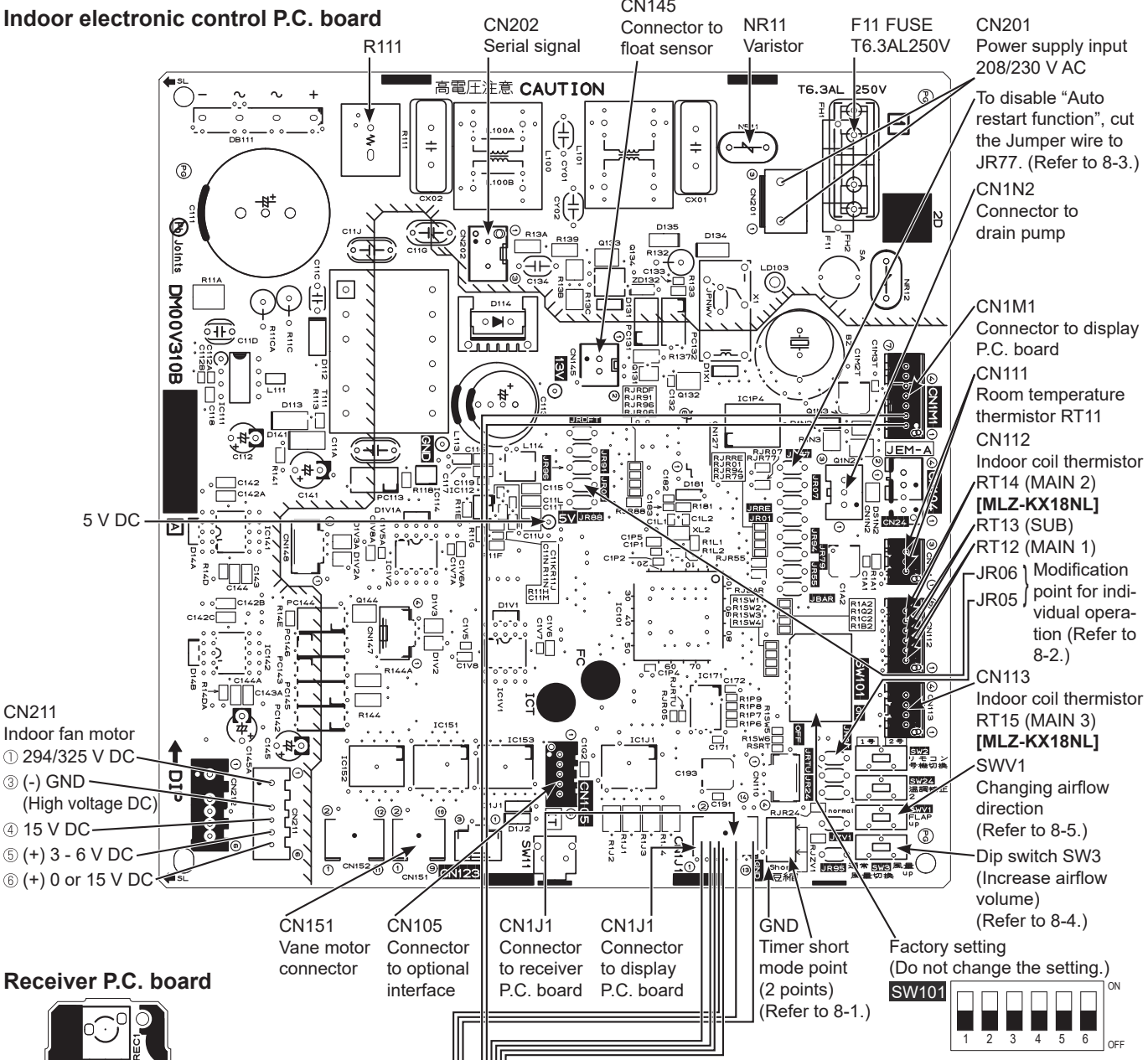

Receiver P.C. board

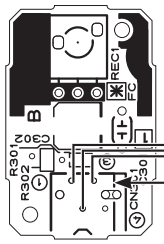

CN301
Indoor electronic control
P.C. board connector

Display P.C. board

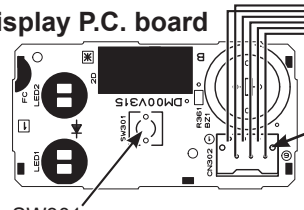

CN302
Indoor electronic control
P.C. board connector

SW301
Emergency operation switch

Indoor coil thermistor [RT12,RT14,RT15 (MAIN), RT13 (SUB)]
Room temperature thermistor (RT11)

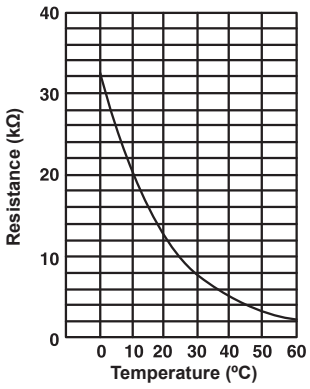

11 DISASSEMBLY INSTRUCTIONS

<Detaching method of the terminal with locking mechanism>

The terminal which has the locking mechanism can be detached as shown below.
There are 2 types of the terminal with locking mechanism.
The terminal without locking mechanism can be detached by pulling it out.
Check the shape of the terminal before detaching.

(1) Slide the sleeve and check if there is a locking lever or not.

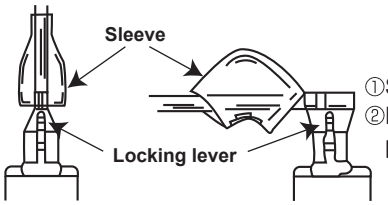

①Slide the sleeve.
②Pull the terminal while pushing the locking lever.

(2) The terminal with this connector shown below has the locking mechanism.

①Hold the sleeve, and pull out the terminal slowly.

11-1. MLZ-KX09NL MLZ-KX15NL MLZ-KX18NL

NOTE: Turn OFF the power supply before disassembly.

→: Indicates the visible parts in the photos/figures.
- - →: Indicates the invisible parts in the photos/figures.

OPERATING PROCEDURE	PHOTOS/FIGURES
1. Removing the intake grille (1) Slide the tabs (2 places) of intake grille in the direction of the arrow (Figure 1). (2) Hold the intake grille and pull it down to open (Figure 2). (3) Slide the grille shafts (1 each on the left and right sides) off the intake grille and remove the intake grille (Figure 3). (4) Remove the safety strings of intake grille from the hooks (Figure 4).	**Photo 1** 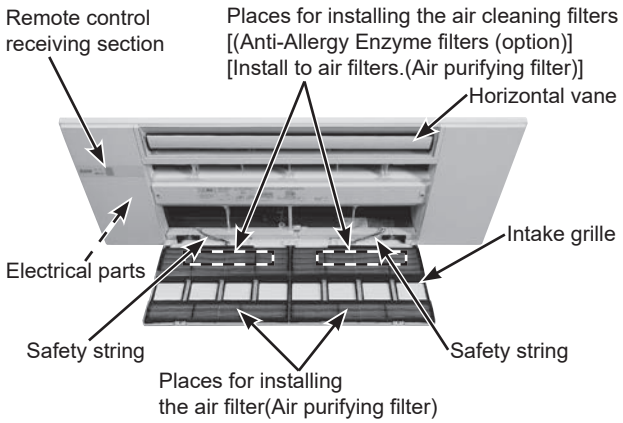

Figure 1

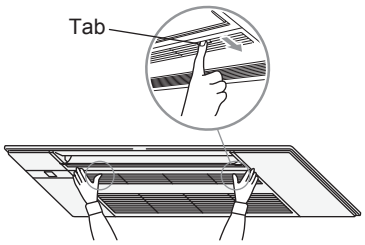

Figure 2

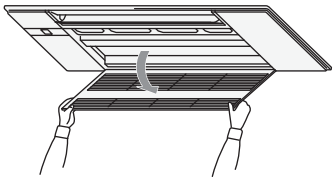

Figure 3

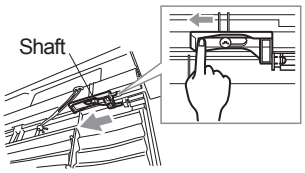

Figure 4

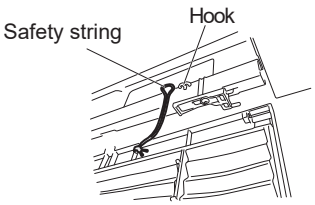

OPERATING PROCEDURE	PHOTOS/FIGURES

2. Removing the grille

(1) Remove the intake grille.
(2) Remove the fixing screws for side panels (2 screws) on the left and right sides (Figure 5).
(3) Open the side panels on the left and right sides. Remove the safety strings from the grille and remove the side panels (Figure 5).
(4) Open the horizontal vane completely.
(5) Remove the screw cap in the center of air outlet (Figure 5).
(6) Remove the fixing screws ① at 4 places on the left and right sides (Figure 6).
(7) Remove the fixing screws ① at 2 places in the middle and the fixing screw ② in the center (Figure 6).
(8) Remove the temporary holding tabs of the grille from the hooks of the indoor unit (Figure 6).

Figure 5

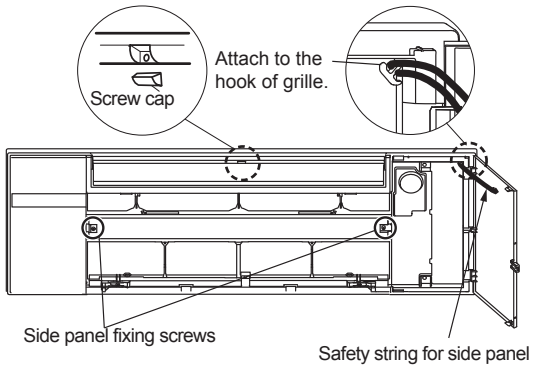

Figure 6

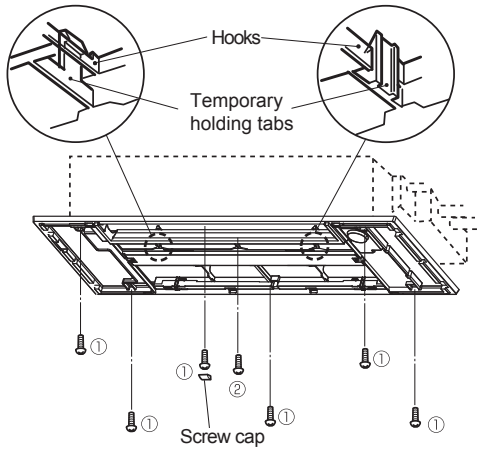

<Installing the grille>

(1) Open the horizontal vane completely.
(2) Remove the screw cap in the center of air outlet (Figure 5).
(3) Attach the temporary holding tabs of the grille to the hooks of the indoor unit (Figure 6).
(4) Place the grille so that it fits closely with the ceiling surface. Loosely fasten with the provided fixing screws ① at 4 places on the left and right side (Figure 6).
(5) Tighten the fixing screws ① at 2 places in the middle and the fixing screw ② in the center (Figure 6).
(6) Tighten the fixing screws ① at 4 places on the left and right sides.

NOTE: Make sure there are no gaps between the indoor unit and the grille, or between the grille and the ceiling surface. If there are any gaps, the wind may come in and it may cause water to drip (Figure 7).

NOTE: Tighten the fixing screws ① and ② completely (Figure 6).

NOTE: If there are any gaps between the grille and the ceiling, with the grille attached, slightly adjust the installation height of the unit and clear the gap (Figure 8).

Figure 7

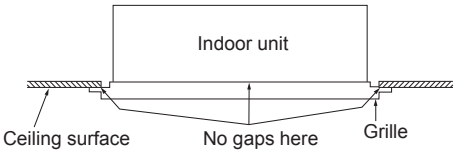

Figure 8

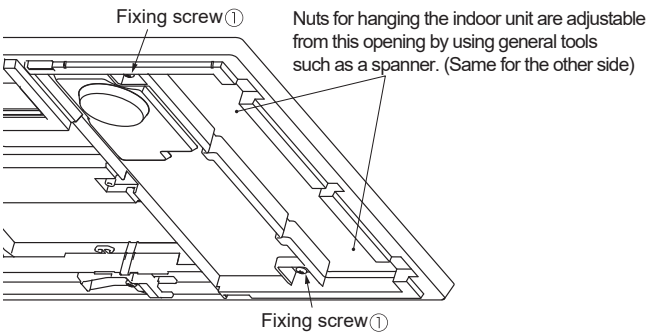

OPERATING PROCEDURE

(7) Install the screw cap.
(8) After attaching the safety strings for the left and right side panels to the grille, install the side panels (Figure 9).
NOTE: Make sure that the tabs of the side panels securely fit into place (Figure 9).
NOTE: Open the display cover to make sure the positioning marks are aligned.
NOTE: Make sure that there are no gaps between the emergency operation switch and the side panel (Figure 10).
NOTE: Make sure that the safety strings do not hang out of the side panels.
(9) Fix with the side panel fixing screws on the left and right sides (Figure 10).
(10) Attach the air cleaning filters (Anti-Allergy Enzyme filters), if any, to the catches on the air filters(Air purifier filters) (Figure 11).
(11) Attach the safety strings for intake grille to the grille and insert the grille shafts into the holes of the intake grille (Figure 11).
(12) Close the intake grille (Figure 12).

NOTE: Press the intake grille firmly against the grille until a click is heard from each tab on the left and right sides.

<Check after installing>

(1) Check that there are no gaps between the indoor unit and the grille, or between the grille and the ceiling surface.
NOTE: If there are any gaps, the wind may come in and it may cause water to drip.
(2) Check that the screw cap is installed.
(3) Check that the left and right side panels are installed securely.
(4) Check that the emergency operation switch is installed securely.
(5) Check that the display cover of side panel is installed securely.
(6) Check that the filters are installed securely.
NOTE: If the filters are not installed securely, the intake grille may not close properly.
(7) Check that the safety strings (4 places) are attached securely.

PHOTOS/FIGURES

Figure 9

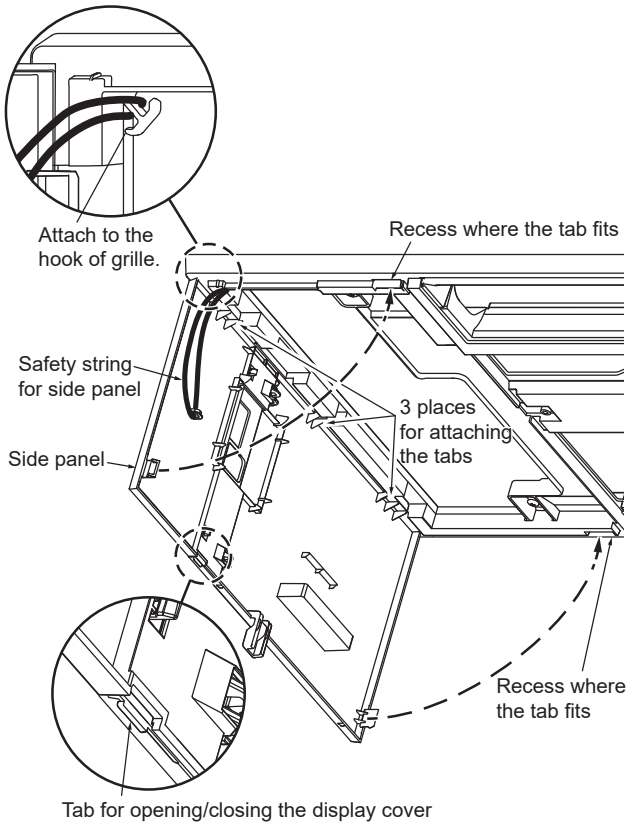

Figure 10

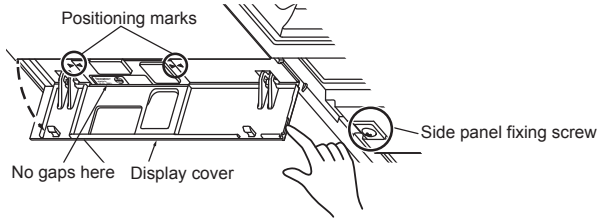

Figure 11

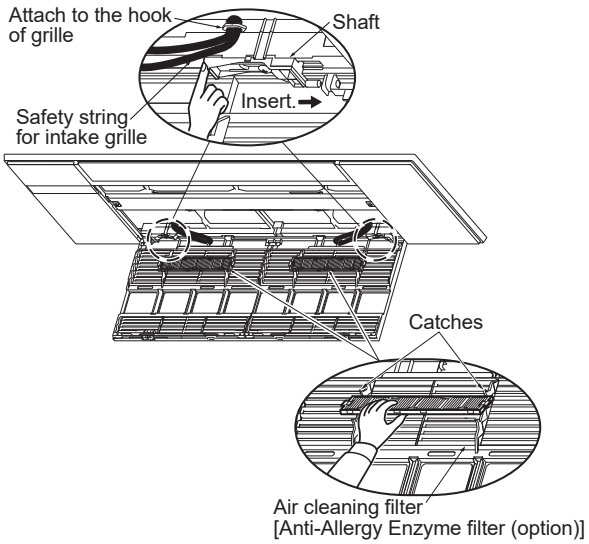

Figure 12

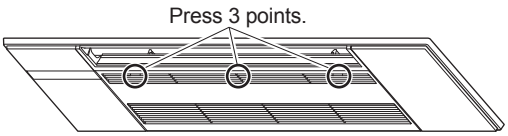

OPERATING PROCEDURE	PHOTOS/FIGURES

3. Removing the indoor electric control P.C. board, the receiver P.C. board and the display P.C. board

(1) Remove the intake grille.
(2) Remove the side panel (L).
(3) Remove the electrical cover Ⓐ and Ⓑ (4 fixing screws) (Photo 2).
(4) Partially slide the indoor electronic control P.C. board out.
(5) Disconnect all the connectors and lead wires on the board to remove the indoor electric control P.C. board.
(6) Remove the tabs at the top and bottom of lamp cover, and open the lamp cover.
(7) Disconnect the connectors and lead wires, and remove the receiver P.C. board and the display P.C. board.

Photo 2

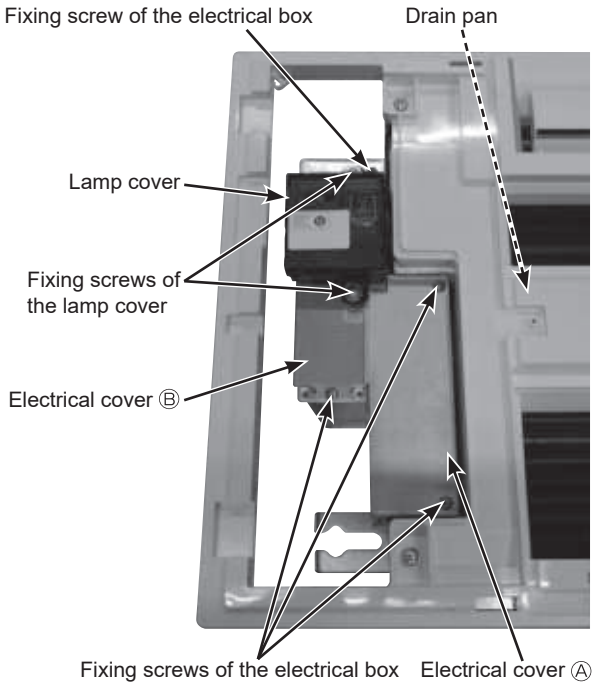

4. Removing the heat exchanger and stabilizer

(1) Remove the grille.
(2) Remove the room temperature thermistor.
(3) Remove the tabs (2 places) in the center of stabilizer and remove the drain pan (4 fixing screws).
(4) Remove the electrical cover Ⓐ and Ⓑ.
(5) Disconnect the connectors of the horizontal and vertical vane motors.
(6) Remove the indoor coil thermistors (main and sub).
(7) Remove the drain cover (3 fixing screws).
(8) Remove the pipe band.
(9) Remove the heat exchanger (6 fixing screws).
(10) Remove the stabilizer (2 fixing screws).

Photo 3

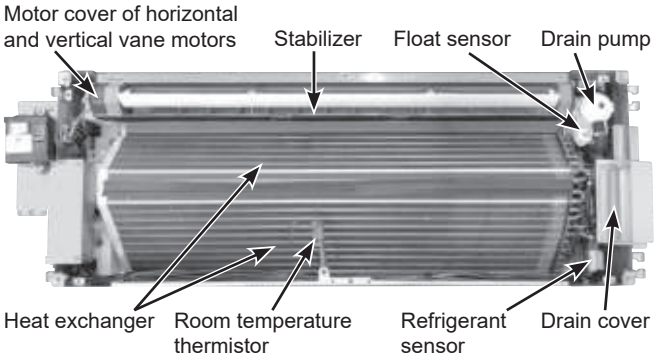

5. Removing the horizontal and vertical vane motors

(1) Remove the grille.
(2) Remove the drain pan.
(3) Remove the horizontal vane.
(4) Remove the cover of horizontal and vertical vane motors (2 fixing screws).
(5) Remove the vertical vane motor (2 fixing screws) and disconnect the connector (Photo 4).
(6) Remove the horizontal vane motor (2 fixing screws) and disconnect the connector (Photo 4).

Photo 4

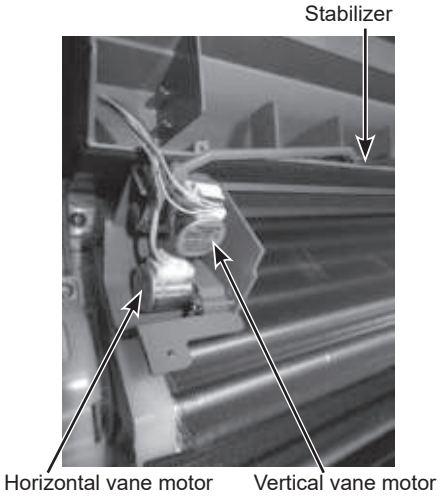

OPERATING PROCEDURE	PHOTOS/FIGURES
6. Removing the drain pump and float sensor (1) Remove the grille. (2) Remove the drain pan. (3) Disconnect the connector of the drain pump (Photo 5). (4) Disconnect the connector of the float sensor (Photo 5). (5) Remove the drain hose (Photo 5). (6) Remove the screws securing the drain pump to the unit (3 fixing screws) (Photo 5). (7) Remove the screws securing the drain pump to the base part.(3 fixing screws) (Photo 5).	**Photo 5** 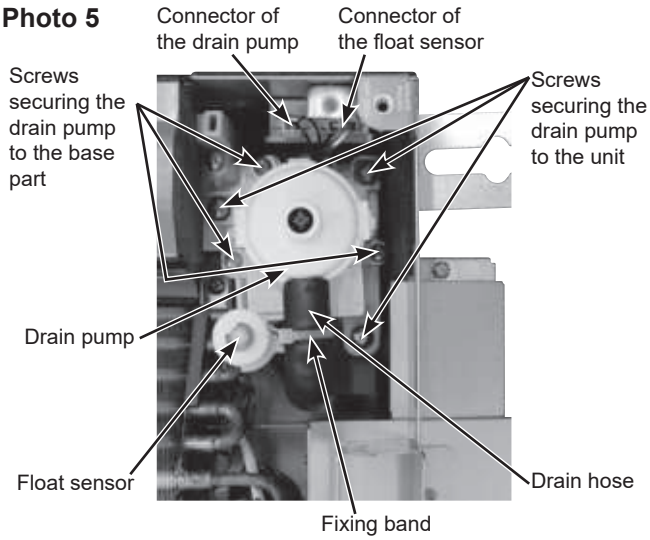
7. Removing the fan motor and line flow fan (1) Remove the grille. (2) Remove the drain pan. (3) Remove the drain cover. (4) Remove the pipe band. (5) Remove the electrical cover Ⓐ and Ⓑ. (6) Remove the terminal box (2 fixing screws). (7) Remove the safety strings (2 places) from the clamps and untie (Photo 6). (8) Hook the safety strings to the tabs on the side plate of indoor heat exchanger. (9) Remove the indoor heat exchanger (6 fixing screws) and slide it downward. (10) Remove the stabilizer (2 fixing screws). (11) Partially slide the indoor electric control P.C. board out. (12) Disconnect the connector (CN211) of indoor fan motor. (13) Remove the motor band (2 fixing screws) (Figure 6). (14) Remove the indoor fan motor and line flow fan. (No need to remove the indoor heat exchanger to remove these 2 items.)	**Photo 6** 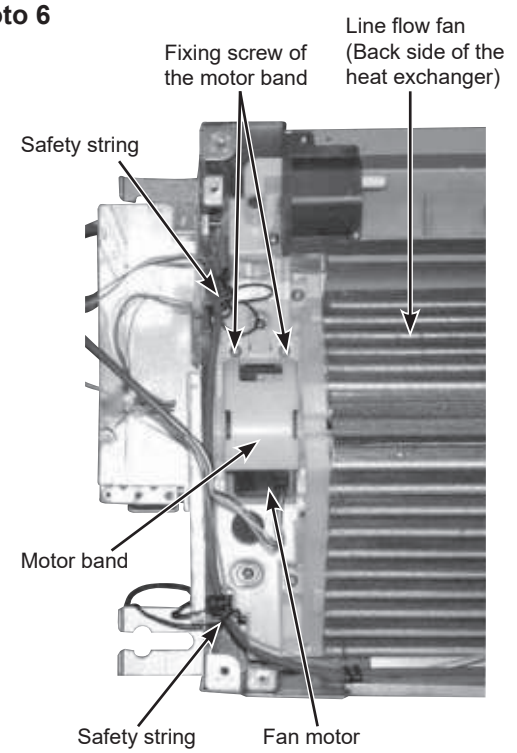

OPERATING PROCEDURE	PHOTOS/FIGURES
8. Removing the refrigerant sensor (1) Remove the panel. (Refer to section 1.) (2) Loosen the screw of the refrigerant sensor plate, and take the refrigerant sensor plate. (3) Remove the screw of the V.A. clamp cover and remove the V.A. clamp cover. (4) Remove the screw of the electrical cover and remove the electrical cover. (5) Loosen the screw of the terminal bed, and pull the terminal bed downwards. (6) Pull the P.C. board upwards and disconnect the connector of the refrigerant sensor. (7) Cut the band fixing the lead wire. (8) Disengage the refrigerant sensor cover from the refrigerant sensor plate. (9) Disengage the catches to open the refrigerant sensor cover. (10) Take the refrigerant sensor, then disconnect the lead wire.	**Photo 7** 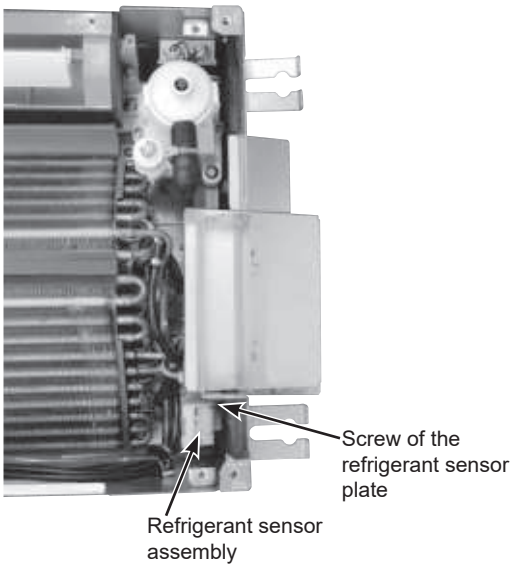
Photo 9 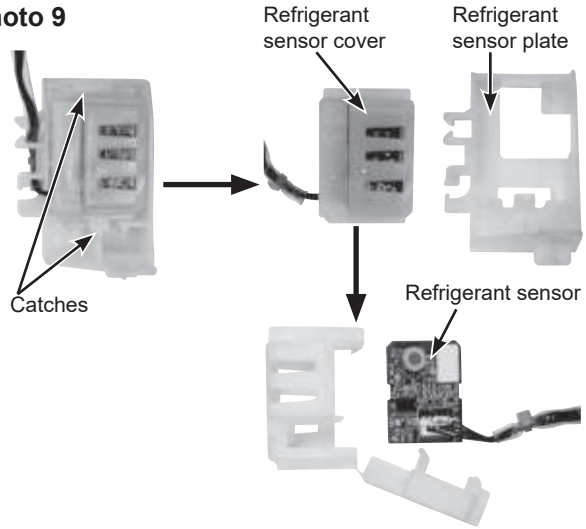 	**Photo 8** 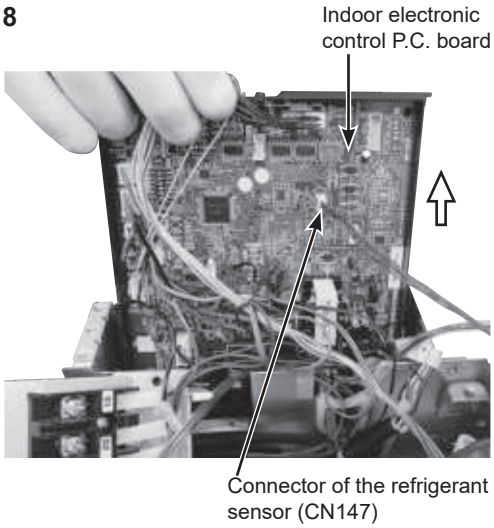

MITSUBISHI ELECTRIC CORPORATION

HEAD OFFICE: TOKYO BUILDING, 2-7-3, MARUNOUCHI, CHIYODA-KU, TOKYO 100-8310, JAPAN

© Copyright 2024 MITSUBISHI ELECTRIC CORPORATION
Issued: Jun. 2025. No. OBH957 REVISED EDITION-A
Published: Oct. 2024. No. OBH957
Made in Japan

Specifications are subject to change without notice.