MITSUBISHI ELECTRIC

SPLIT-TYPE AIR CONDITIONERS

Revision E:

- Electronic control P.C. boards for MSZ-GE06/09/12/15/18NA-8, MSZ-GE06/09/12/15/18NA-9 have been changed.

OBB548 REVISED EDITION-D is void.

INDOOR UNIT

PARTS CATALOG

No. OBB548
REVISED EDITION-E

Models

MSZ-GE06NA **MSZ-GE06NA-8,9**
MSZ-GE09NA **MSZ-GE09NA-8,9**
MSZ-GE12NA **MSZ-GE12NA-8,9**
MSZ-GE15NA **MSZ-GE15NA-8,9**
MSZ-GE18NA **MSZ-GE18NA-8,9**
MSZ-GE24NA
MSY-GE09NA **MSY-GE09NA-8,9**
MSY-GE12NA **MSY-GE12NA-8,9**
MSY-GE15NA **MSY-GE15NA-8,9**
MSY-GE18NA **MSY-GE18NA-8,9**
MSY-GE24NA

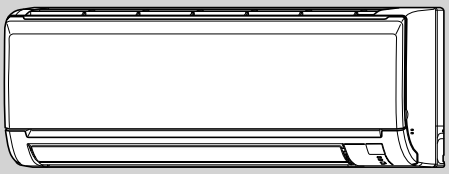

MSZ-GE06/09/12/15/18NA
MSY-GE09/12/15/18NA

CONTENTS

1. RoHS PARTS LIST 2
2. OPTIONAL PARTS 18

SERVICE MANUAL (OBH548)

NOTE:
RoHS compliant products have <G> mark on the spec name plate.

Mr.SLIM™

Revision A:
• MSZ-GE24NA and MSY-GE24NA have been added.

Revision B:
• MSZ-GE06/09/12/15/18NA-8 and MSY-GE09/12/15/18NA-8 have been added.

Revision C:
• Electronic control P.C. boards for MSZ-GE06/09/12/15/18/24NA have been changed.

Revision D:
• MSZ-GE06/09/12/15/18NA-9 and MSY-GE09/12/15/18NA-9 have been added.

Revision E:
• Electronic control P.C. boards for MSZ-GE06/09/12/15/18NA-8, MSZ-GE06/09/12/15/18NA-9 have been changed.

1 RoHS PARTS LIST

MSZ-GE06NA MSZ-GE09NA MSZ-GE12NA MSZ-GE15NA MSZ-GE18NA
MSY-GE09NA MSY-GE12NA MSY-GE15NA MSY-GE18NA

1-1. INDOOR UNIT STRUCTURAL PARTS

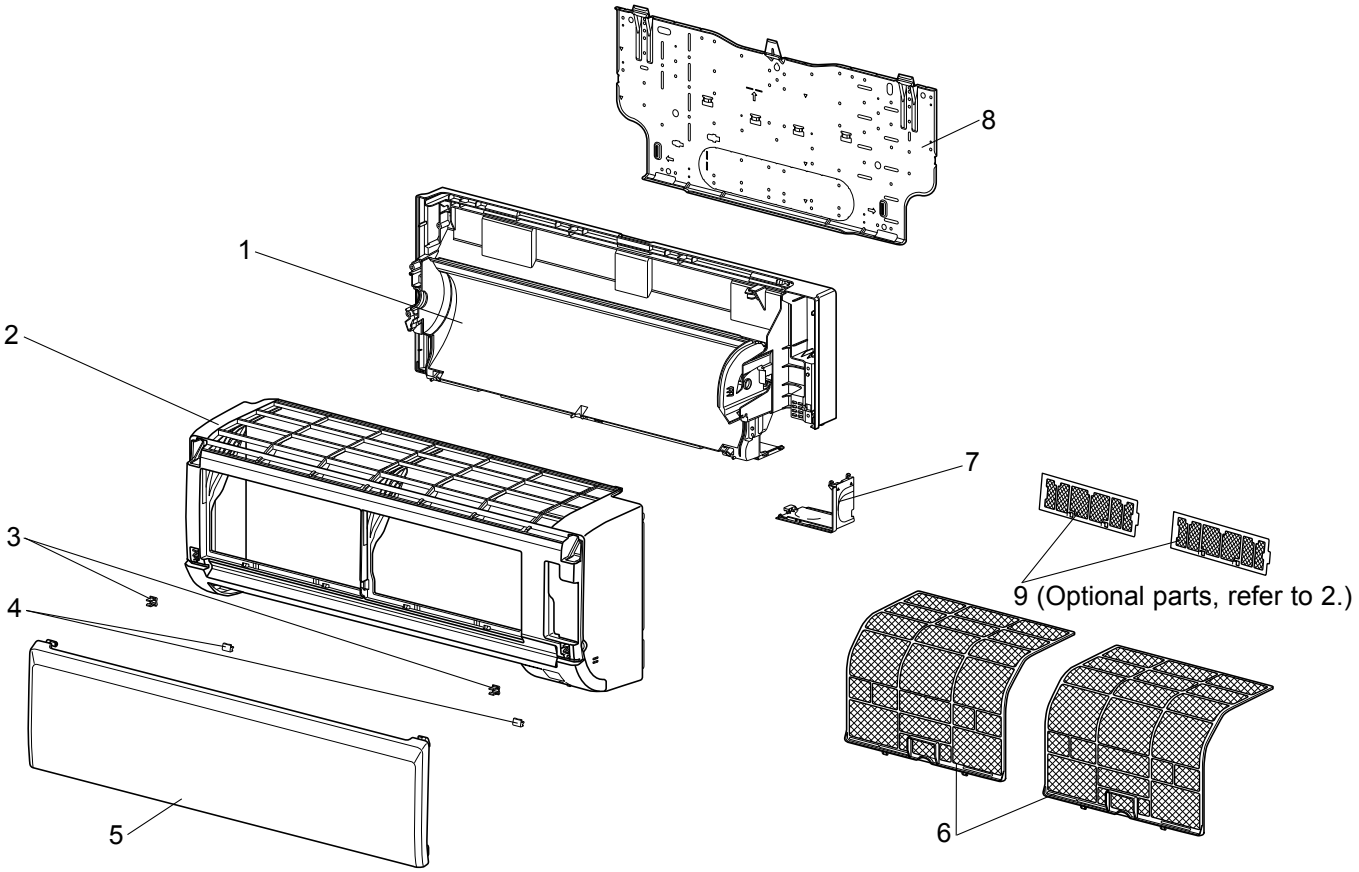

1-2. ACCESSORY AND REMOTE CONTROLLER

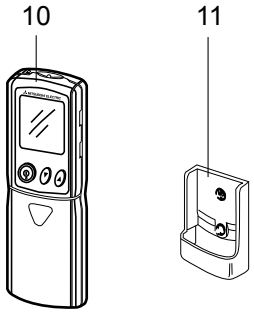

RoHS PARTS LIST

1-1. INDOOR UNIT STRUCTURAL PARTS

No.	RoHS	Part No.	Part name	Symbol in Wiring Diagram	Q'ty/unit									Remarks
					MSZ-GE					MSY-GE				
					06 NA	09 NA	12 NA	15 NA	18 NA	09 NA	12 NA	15 NA	18 NA	
1	G	E12 D68 234	BOX ASSEMBLY		1	1	1	1	1	1	1	1	1	
2	G	E12 E79 000	PANEL ASSEMBLY		1	1	1	1	1	1	1	1	1	Including No. 3,4,5
3	G	E12 408 142	CATCH		2	2	2	2	2	2	2	2	2	2 PCS/SET
4	G	E12 913 067	SCREW CAP		2	2	2	2	2	2	2	2	2	2 PCS/SET
5	G	E12 E79 010	FRONT PANEL		1	1	1	1	1	1	1	1	1	
6	G	E12 D68 100	CATECHIN AIR FILTER		2	2	2	2	2	2	2	2	2	1 PC/SET
7	G	E12 D68 975	CORNER BOX (RIGHT)		1	1	1	1	1	1	1	1	1	
8	G	E12 D68 970	INSTALLATION PLATE		1	1	1	1	1	1	1	1	1	
9	G	-	AIR CLEANING FILTER (ANTI-ALLERGY ENZYME FILTER)		2	2	2	2	2	2	2	2	2	MAC-408FT-E 2 PCS/SET

1-2. ACCESSORY AND REMOTE CONTROLLER

10	G	E12 E79 426	REMOTE CONTROLLER		1	1	1	1	1					KM09E
	G	E12 E83 426	REMOTE CONTROLLER							1	1	1	1	KM09F
11	G	E12 527 083	REMOTE CONTROLLER HOLDER		1	1	1	1	1	1	1	1	1	

RoHS PARTS LIST

MSZ-GE06NA MSZ-GE09NA MSZ-GE12NA MSZ-GE15NA MSZ-GE18NA
MSY-GE09NA MSY-GE12NA MSY-GE15NA MSY-GE18NA

1-3. INDOOR UNIT ELECTRICAL PARTS AND FUNCTIONAL PARTS

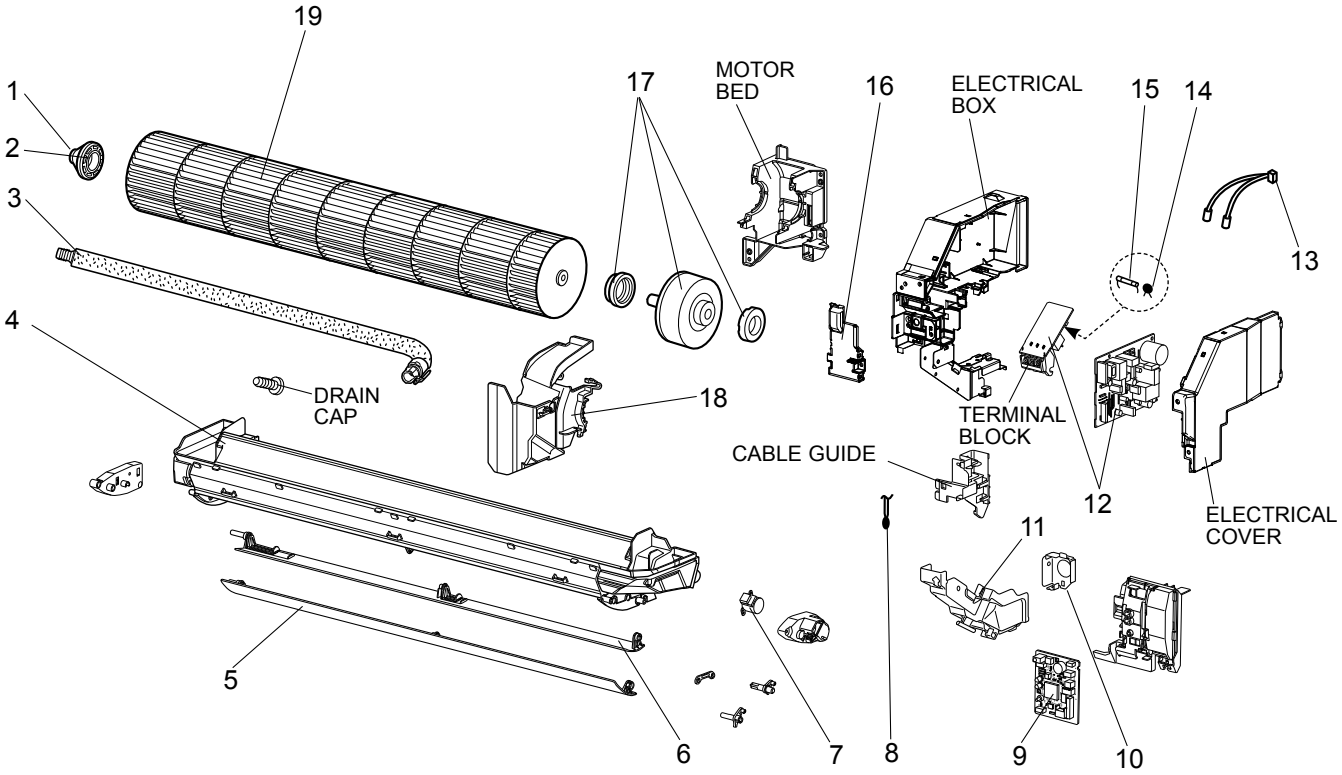

RoHS PARTS LIST

1-3. INDOOR UNIT ELECTRICAL PARTS AND FUNCTIONAL PARTS

No.	RoHS	Part No.	Part name	Symbol in Wiring Diagram	Q'ty/unit									Remarks
					MSZ-GE					MSY-GE				
					06 NA	09 NA	12 NA	15 NA	18 NA	09 NA	12 NA	15 NA	18 NA	
1	G	E12 751 509	BEARING MOUNT		1	1	1	1	1	1	1	1	1	
2	G	E12 001 504	SLEEVE BEARING		1	1	1	1	1	1	1	1	1	
3	G	E12 897 702	DRAIN HOSE		1	1	1	1	1	1	1	1	1	
4	G	E12 E79 235	NOZZLE ASSEMBLY		1	1	1	1	1	1	1	1	1	
5	G	E12 D68 040	VANE (UPPER)		1	1	1	1	1	1	1	1	1	
6	G	E12 D68 041	VANE (LOWER)		1	1	1	1	1	1	1	1	1	
7	G	E12 A89 303	VANE MOTOR	MV	1	1	1	1	1	1	1	1	1	UP & DOWN
8	G	E12 D68 308	ROOM TEMPERATURE THERMISTOR	RT11	1	1	1	1	1	1	1	1	1	
9	G	E12 G57 452	ELECTRONIC CONTROL P.C. BOARD		1									
	G	E12 G58 452				1								
	G	E12 G59 452					1							
	G	E12 G60 452						1						
	G	E12 G61 452							1					
	G	E12 E83 452								1				
	G	E12 E84 452									1			
	G	E12 E85 452										1		
	G	E12 E86 452											1	
10	G	E12 E79 978	CONDUIT PLATE		1	1	1	1	1	1	1	1	1	
11	G	E12 E79 979	CONDUIT COVER		1	1	1	1	1	1	1	1	1	
12	G	E12 E79 440	POWER P.C. BOARD ※1		1	1	1	1	1	1	1	1	1	
13	G	E12 D68 307	INDOOR COIL THERMISTOR	RT12,RT13	1	1	1	1	1	1	1	1	1	
14	G	E12 B75 385	VARISTOR	NR11	1	1	1	1	1	1	1	1	1	
15	G	E12 A49 382	FUSE	F11	1	1	1	1	1	1	1	1	1	T3.15AL250V
16	G	E12 E79 784	V.A. CLAMP		1	1	1	1	1	1	1	1	1	
17	G	E12 E79 300	INDOOR FAN MOTOR ※2	MF	1	1	1	1	1	1	1	1	1	RC0J40-□□
18	G	E12 D68 333	MOTOR BAND		1	1	1	1	1	1	1	1	1	
19	G	E12 A89 302	LINE FLOW FAN		1	1	1	1	1	1	1	1	1	

※1 Including TERMINAL BLOCK with TERMINAL P.C. BOARD
※2 Including FAN MOTOR RUBBER MOUNT (2 PCS/SET)

RoHS PARTS LIST

MSZ-GE06NA MSZ-GE09NA MSZ-GE12NA MSZ-GE15NA MSZ-GE18NA
MSY-GE09NA MSY-GE12NA MSY-GE15NA MSY-GE18NA

1-4. INDOOR UNIT HEAT EXCHANGER

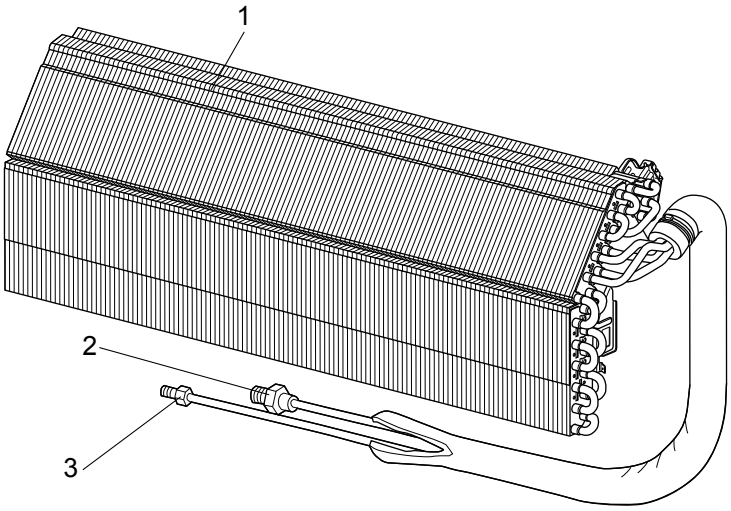

No.	RoHS	Part No.	Part name	Symbol in Wiring Diagram	Q'ty/unit									Remarks
					MSZ-GE					MSY-GE				
					06 NA	09 NA	12 NA	15 NA	18 NA	09 NA	12 NA	15 NA	18 NA	
1	G	E12 D68 620	INDOOR HEAT EXCHANGER		1	1	1			1	1			
	G	E12 D71 620						1	1			1	1	
2	G	E12 815 666	UNION (GAS) (ø9.52)		1	1	1			1	1			ø3/8
	G	E12 155 666	UNION (GAS) (ø12.7)					1	1			1	1	ø1/2
3	G	E12 151 667	UNION (LIQUID) (ø6.35)		1	1	1	1	1	1	1	1	1	ø1/4

RoHS PARTS LIST

MSZ-GE06NA-8 MSZ-GE09NA-8 MSZ-GE12NA-8 MSZ-GE15NA-8 MSZ-GE18NA-8
MSY-GE09NA-8 MSY-GE12NA-8 MSY-GE15NA-8 MSY-GE18NA-8

1-5. INDOOR UNIT STRUCTURAL PARTS

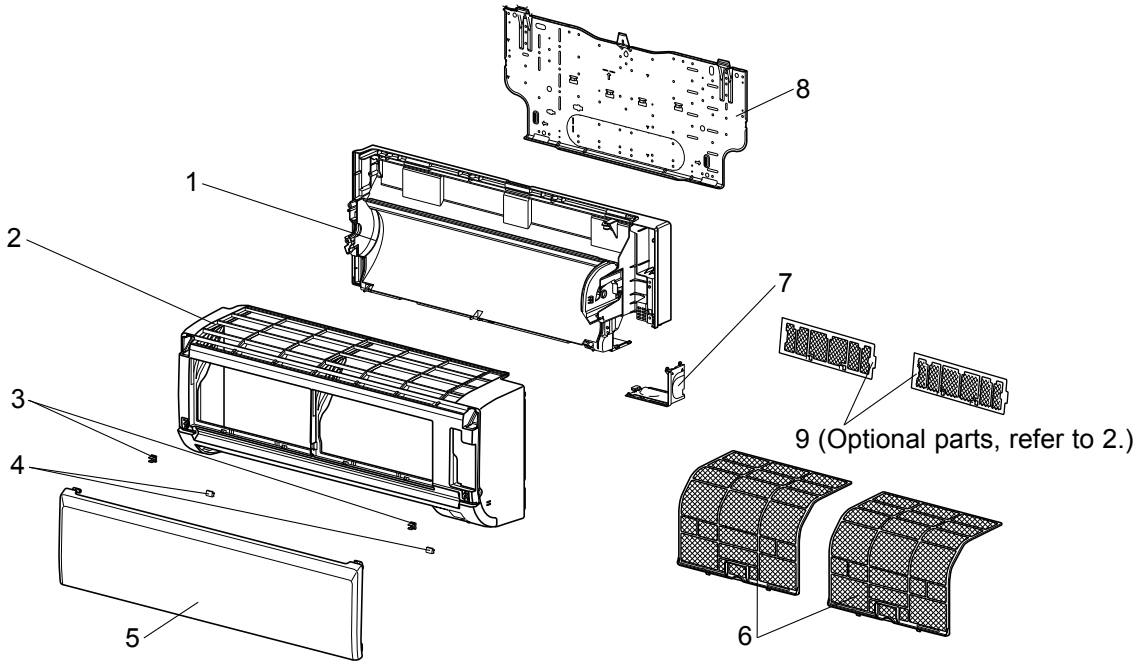

No.	RoHS	Part No.	Part name	Symbol in Wiring Diagram	Q'ty/unit MSZ-GE 06 NA -8	MSZ-GE 09 NA -8	MSZ-GE 12 NA -8	MSZ-GE 15 NA -8	MSZ-GE 18 NA -8	MSY-GE 09 NA -8	MSY-GE 12 NA -8	MSY-GE 15 NA -8	MSY-GE 18 NA -8	Remarks
1	G	E12 D68 234	BOX ASSEMBLY		1	1	1	1	1	1	1	1	1	
2	G	E12 E79 000	PANEL ASSEMBLY		1	1	1	1	1	1	1	1	1	Including No. 3,4,5
3	G	E12 408 142	CATCH		2	2	2	2	2	2	2	2	2	2 PCS/SET
4	G	E12 913 067	SCREW CAP		2	2	2	2	2	2	2	2	2	2 PCS/SET
5	G	E12 E79 010	FRONT PANEL		1	1	1	1	1	1	1	1	1	
6	G	E12 F63 100	NANO PLATINUM FILTER		2	2	2	2	2	2	2	2	2	1 PC/SET
7	G	E12 D68 975	CORNER BOX (RIGHT)		1	1	1	1	1	1	1	1	1	
8	G	E12 D68 970	INSTALLATION PLATE		1	1	1	1	1	1	1	1	1	
9	G	-	AIR CLEANING FILTER (ANTI-ALLERGY ENZYME FILTER)		2	2	2	2	2	2	2	2	2	MAC-408FT-E 2 PCS/SET

1-6. ACCESSORY AND REMOTE CONTROLLER

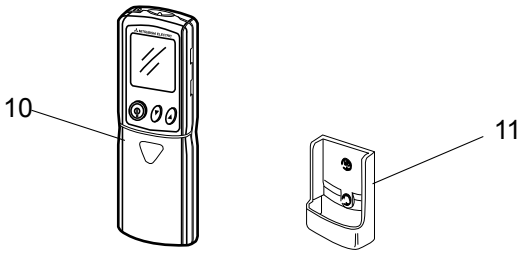

10	G	E12 09C 426	REMOTE CONTROLLER		1	1	1	1	1					KM09E
	G	E12 E83 426	REMOTE CONTROLLER							1	1	1	1	KM09F
11	G	E12 527 083	REMOTE CONTROLLER HOLDER		1	1	1	1	1	1	1	1	1	

RoHS PARTS LIST

MSZ-GE06NA-8 MSZ-GE09NA-8 MSZ-GE12NA-8 MSZ-GE15NA-8 MSZ-GE18NA-8
MSY-GE09NA-8 MSY-GE12NA-8 MSY-GE15NA-8 MSY-GE18NA-8

1-7. INDOOR UNIT ELECTRICAL PARTS AND FUNCTIONAL PARTS

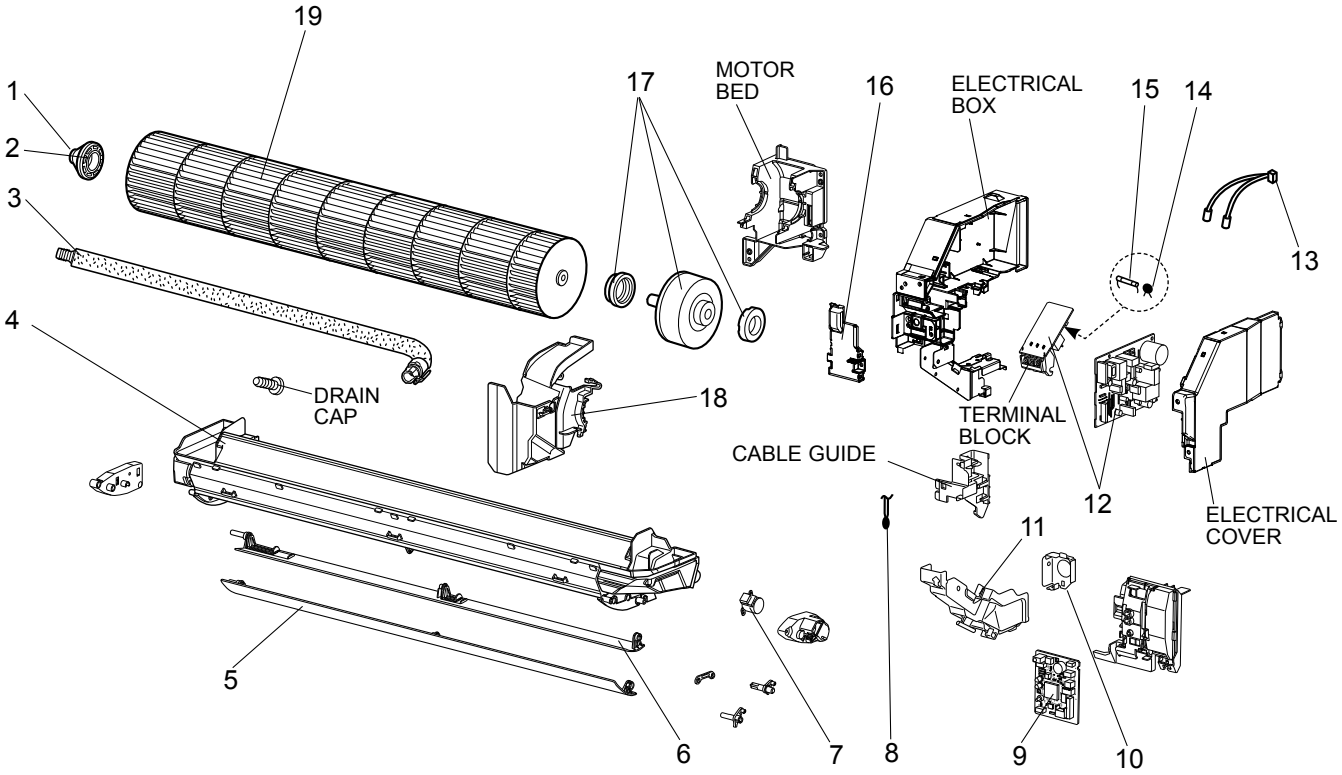

RoHS PARTS LIST

1-7. INDOOR UNIT ELECTRICAL PARTS AND FUNCTIONAL PARTS

No.	RoHS	Part No.	Part name	Symbol in Wiring Diagram	Q'ty/unit									Remarks
					MSZ-GE					MSY-GE				
					06 NA - 8	09 NA - 8	12 NA - 8	15 NA - 8	18 NA - 8	09 NA - 8	12 NA - 8	15 NA - 8	18 NA - 8	
1	G	E12 751 509	BEARING MOUNT		1	1	1	1	1	1	1	1	1	
2	G	E12 001 504	SLEEVE BEARING		1	1	1	1	1	1	1	1	1	
3	G	E12 P72 702	DRAIN HOSE		1	1	1	1	1	1	1	1	1	
4	G	E12 E79 235	NOZZLE ASSEMBLY		1	1	1	1	1	1	1	1	1	
5	G	E12 D68 040	VANE (UPPER)		1	1	1	1	1	1	1	1	1	
6	G	E12 D68 041	VANE (LOWER)		1	1	1	1	1	1	1	1	1	
7	G	E12 A89 303	VANE MOTOR	MV	1	1	1	1	1	1	1	1	1	UP & DOWN
8	G	E12 D68 308	ROOM TEMPERATURE THERMISTOR	RT11	1	1	1	1	1	1	1	1	1	
9	G	E12 09C 452	ELECTRONIC CONTROL P.C. BOARD		1									
	G	E12 10C 452				1								
	G	E12 16C 452					1							
	G	E12 17C 452						1						
	G	E12 18C 452							1					
	G	E12 G46 452								1				
	G	E12 G47 452									1			
	G	E12 G48 452										1		
	G	E12 G49 452											1	
10	G	E12 E79 978	CONDUIT PLATE		1	1	1	1	1	1	1	1	1	
11	G	E12 E79 979	CONDUIT COVER		1	1	1	1	1	1	1	1	1	
12	G	E12 E79 440	POWER P.C. BOARD ※1		1	1	1	1	1	1	1	1	1	
13	G	E12 D68 307	INDOOR COIL THERMISTOR	RT12,RT13	1	1	1	1	1	1	1	1	1	
14	G	E12 B75 385	VARISTOR	NR11	1	1	1	1	1	1	1	1	1	
15	G	E12 A49 382	FUSE	F11	1	1	1	1	1	1	1	1	1	T3.15AL250V
16	G	E12 G41 784	V.A. CLAMP		1	1	1	1	1	1	1	1	1	
17	G	E12 G41 300	INDOOR FAN MOTOR ※2	MF	1	1	1	1	1	1	1	1	1	RC0J40-□□
18	G	E12 D68 333	MOTOR BAND		1	1	1	1	1	1	1	1	1	
19	G	E12 A89 302	LINE FLOW FAN		1	1	1	1	1	1	1	1	1	

※1 Including TERMINAL BLOCK with TERMINAL P.C. BOARD
※2 Including FAN MOTOR RUBBER MOUNT (2 PCS/SET)

RoHS PARTS LIST

MSZ-GE06NA-8 MSZ-GE09NA-8 MSZ-GE12NA-8 MSZ-GE15NA-8 MSZ-GE18NA-8
MSY-GE09NA-8 MSY-GE12NA-8 MSY-GE15NA-8 MSY-GE18NA-8

1-8. INDOOR UNIT HEAT EXCHANGER

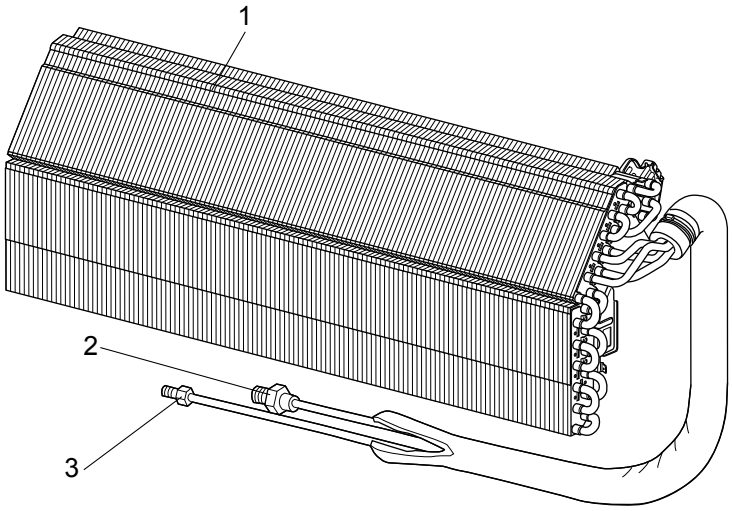

No.	RoHS	Part No.	Part name	Symbol in Wiring Diagram	Q'ty/unit									Remarks
					MSZ-GE					MSY-GE				
					06 NA -8	09 NA -8	12 NA -8	15 NA -8	18 NA -8	09 NA -8	12 NA -8	15 NA -8	18 NA -8	
1	G	E12 N38 620	INDOOR HEAT EXCHANGER		1	1	1			1	1			
	G	E12 N40 620						1	1			1	1	
2	G	E12 815 666	UNION (GAS) (ø9.52)		1	1	1			1	1			ø3/8
	G	E12 155 666	UNION (GAS) (ø12.7)					1	1			1	1	ø1/2
3	G	E12 151 667	UNION (LIQUID) (ø6.35)		1	1	1	1	1	1	1	1	1	ø1/4

RoHS PARTS LIST

MSZ-GE06NA-9 MSZ-GE09NA-9 MSZ-GE12NA-9 MSZ-GE15NA-9 MSZ-GE18NA-9 MSY-GE09NA-9 MSY-GE12NA-9 MSY-GE15NA-9 MSY-GE18NA-9

1-9. INDOOR UNIT STRUCTURAL PARTS

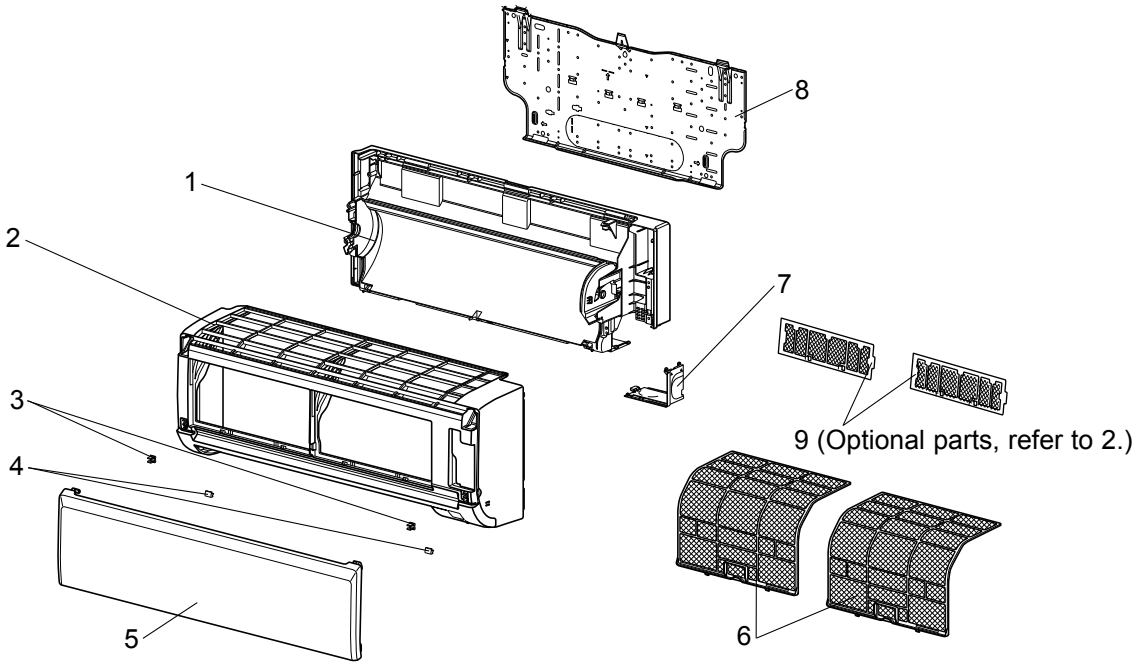

No.	RoHS	Part No.	Part name	Symbol in Wiring Diagram	Q'ty/unit									Remarks
					MSZ-GE					MSY-GE				
					06 NA -9	09 NA -9	12 NA -9	15 NA -9	18 NA -9	09 NA -9	12 NA -9	15 NA -9	18 NA -9	
1	G	U01 A01 234	BOX ASSEMBLY		1	1	1	1	1	1	1	1	1	
2	G	U01 A01 000	PANEL ASSEMBLY		1	1	1	1	1	1	1	1	1	Including No. 3,4,5
3	G	U01 A01 142	CATCH		2	2	2	2	2	2	2	2	2	2 PCS/SET
4	G	U01 A01 067	SCREW CAP		2	2	2	2	2	2	2	2	2	2 PCS/SET
5	G	U01 A01 010	FRONT PANEL		1	1	1	1	1	1	1	1	1	
6	G	U01 A01 100	NANO PLATINUM FILTER		2	2	2	2	2	2	2	2	2	1 PC/SET
7	G	U01 A01 975	CORNER BOX (RIGHT)		1	1	1	1	1	1	1	1	1	
8	G	U01 A01 970	INSTALLATION PLATE		1	1	1	1	1	1	1	1	1	
9	G	-	AIR CLEANING FILTER (ANTI-ALLERGY ENZYME FILTER)		2	2	2	2	2	2	2	2	2	MAC-408FT-E 2 PCS/SET

1-10. ACCESSORY AND REMOTE CONTROLLER

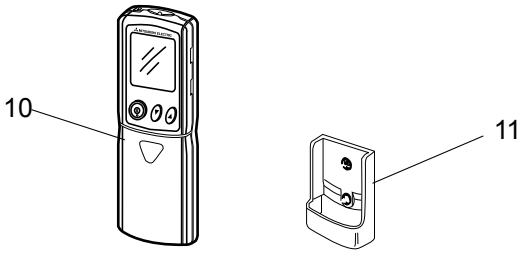

10	G	U01 A01 426	REMOTE CONTROLLER		1	1	1	1	1					KM09E
	G	U41 A02 426	REMOTE CONTROLLER							1	1	1	1	KM09F
11	G	U01 A01 083	REMOTE CONTROLLER HOLDER		1	1	1	1	1	1	1	1	1	

RoHS PARTS LIST

MSZ-GE06NA-9 MSZ-GE09NA-9 MSZ-GE12NA-9 MSZ-GE15NA-9 MSZ-GE18NA-9
MSY-GE09NA-9 MSY-GE12NA-9 MSY-GE15NA-9 MSY-GE18NA-9

1-11. INDOOR UNIT ELECTRICAL PARTS AND FUNCTIONAL PARTS

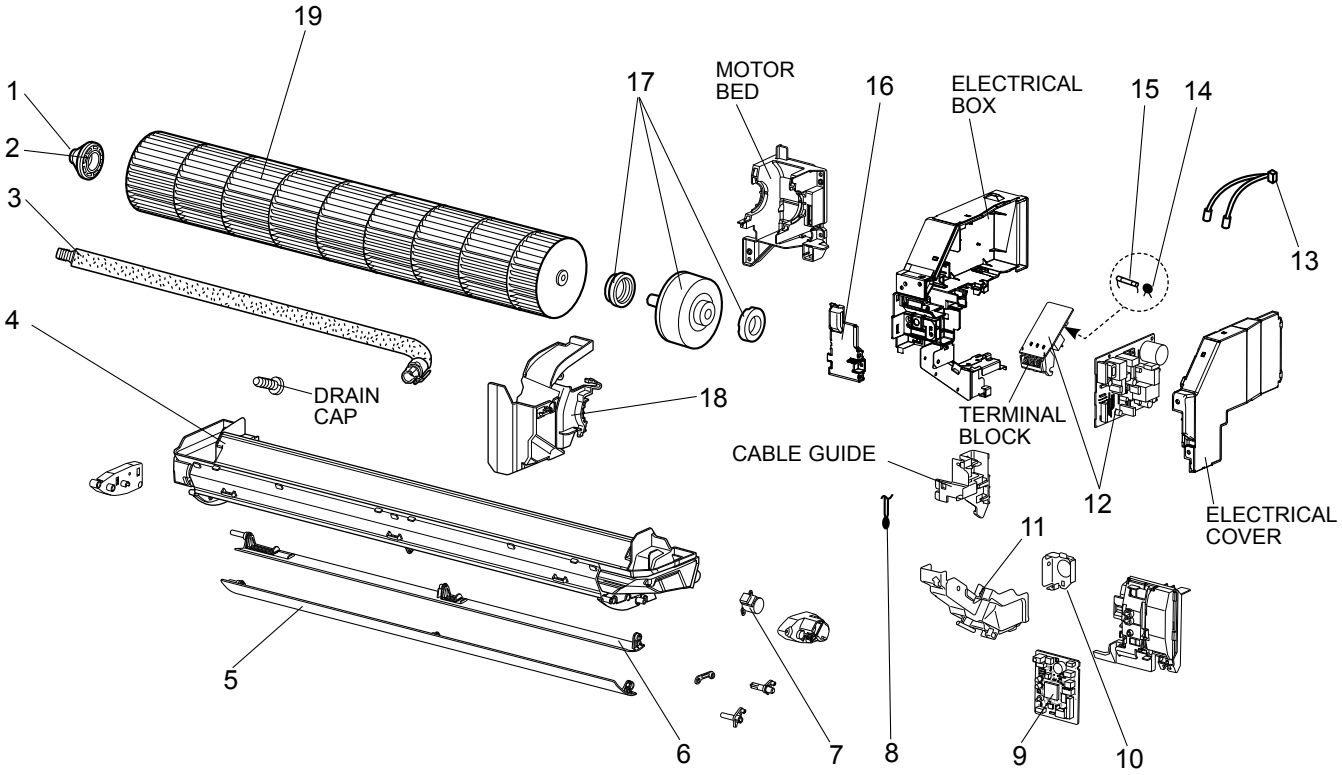

RoHS PARTS LIST

1-11. INDOOR UNIT ELECTRICAL PARTS AND FUNCTIONAL PARTS

No.	RoHS	Part No.	Part name	Symbol in Wiring Diagram	Q'ty/unit									Remarks
					MSZ-GE					MSY-GE				
					06 NA - 9	09 NA - 9	12 NA - 9	15 NA - 9	18 NA - 9	09 NA - 9	12 NA - 9	15 NA - 9	18 NA - 9	
1	G	U01 A01 509	BEARING MOUNT		1	1	1	1	1	1	1	1	1	
2	G	U01 A01 504	SLEEVE BEARING		1	1	1	1	1	1	1	1	1	
3	G	U01 A01 702	DRAIN HOSE		1	1	1	1	1	1	1	1	1	
4	G	U01 A01 235	NOZZLE ASSEMBLY		1	1	1	1	1	1	1	1	1	
5	G	U01 A01 040	VANE (UPPER)		1	1	1	1	1	1	1	1	1	
6	G	U01 A01 041	VANE (LOWER)		1	1	1	1	1	1	1	1	1	
7	G	U01 A01 303	VANE MOTOR	MV	1	1	1	1	1	1	1	1	1	UP & DOWN
8	G	U01 A01 308	ROOM TEMPERATURE THERMISTOR	RT11	1	1	1	1	1	1	1	1	1	
9	G	U01 A23 452	ELECTRONIC CONTROL P.C. BOARD		1									
	G	U01 A24 452				1								
	G	U01 A25 452					1							
	G	U01 A26 452						1						
	G	U01 A27 452							1					
	G	U01 A06 452								1				
	G	U01 A07 452									1			
	G	U01 A08 452										1		
	G	U01 A09 452											1	
10	G	U01 A01 978	CONDUIT PLATE		1	1	1	1	1	1	1	1	1	
11	G	U01 A01 979	CONDUIT COVER		1	1	1	1	1	1	1	1	1	
12	G	U01 A01 440	POWER P.C. BOARD ※1		1	1	1	1	1	1	1	1	1	
13	G	U01 A01 307	INDOOR COIL THERMISTOR	RT12,RT13	1	1	1	1	1	1	1	1	1	
14	G	U01 A01 385	VARISTOR	NR11	1	1	1	1	1	1	1	1	1	
15	G	U01 A01 382	FUSE	F11	1	1	1	1	1	1	1	1	1	T3.15AL250V
16	G	U01 A01 784	V.A. CLAMP		1	1	1	1	1	1	1	1	1	
17	G	U01 A01 300	INDOOR FAN MOTOR ※2	MF	1	1	1	1	1	1	1	1	1	RC0J40-□□
18	G	U01 A01 333	MOTOR BAND		1	1	1	1	1	1	1	1	1	
19	G	U01 A01 302	LINE FLOW FAN		1	1	1	1	1	1	1	1	1	

※1 Including TERMINAL BLOCK with TERMINAL P.C. BOARD
※2 Including FAN MOTOR RUBBER MOUNT (2 PCS/SET)

RoHS PARTS LIST

MSZ-GE06NA-9 MSZ-GE09NA-9 MSZ-GE12NA-9 MSZ-GE15NA-9 MSZ-GE18NA-9
MSY-GE09NA-9 MSY-GE12NA-9 MSY-GE15NA-9 MSY-GE18NA-9

1-12. INDOOR UNIT HEAT EXCHANGER

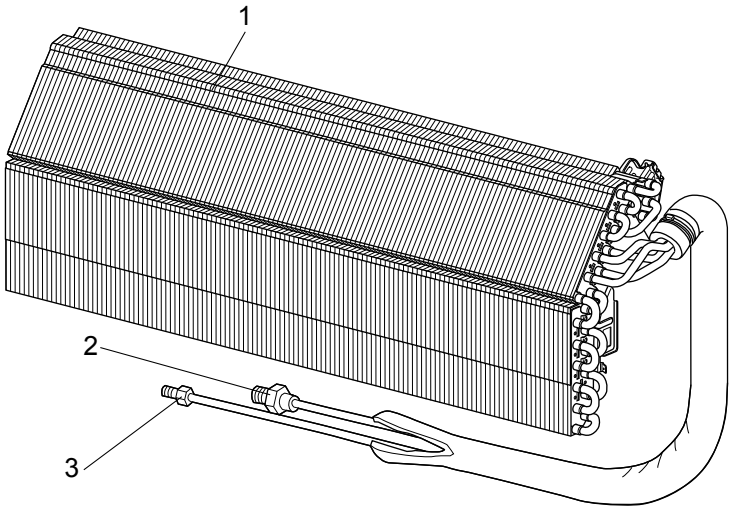

No.	RoHS	Part No.	Part name	Symbol in Wiring Diagram	Q'ty/unit									Remarks
					MSZ-GE					MSY-GE				
					06 NA -9	09 NA -9	12 NA -9	15 NA -9	18 NA -9	09 NA -9	12 NA -9	15 NA -9	18 NA -9	
1	G	U01 A01 620	INDOOR HEAT EXCHANGER		1	1	1			1	1			
	G	U01 A02 620						1	1			1	1	
2	G	U01 A01 666	UNION (GAS) (ø9.52)		1	1	1			1	1			ø3/8
	G	U04 A02 666	UNION (GAS) (ø12.7)					1	1			1	1	ø1/2
3	G	U01 A01 667	UNION (LIQUID) (ø6.35)		1	1	1	1	1	1	1	1	1	ø1/4

RoHS PARTS LIST

MSZ-GE24NA
MSY-GE24NA

1-13. INDOOR UNIT STRUCTURAL PARTS

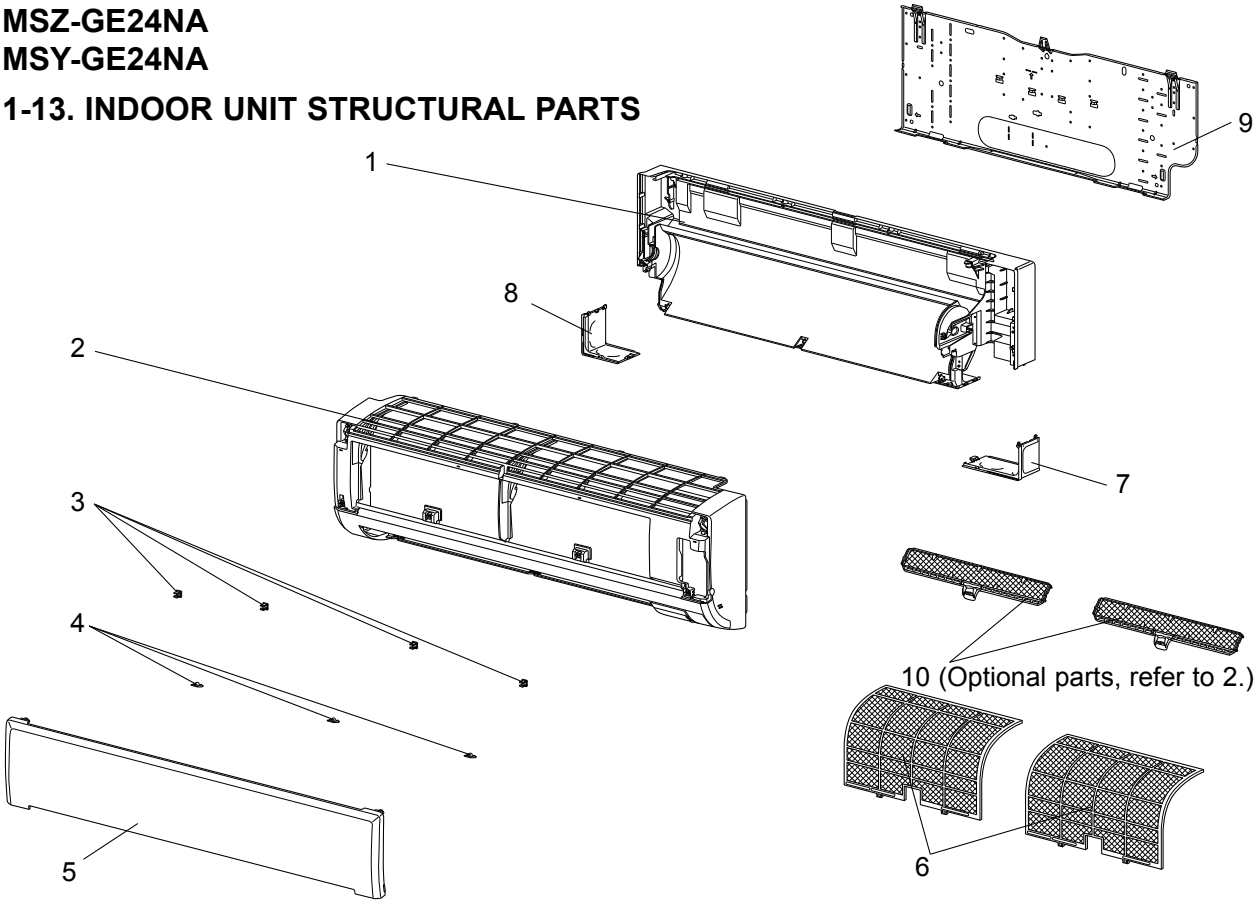

No.	RoHS	Part No.	Part name	Symbol in Wiring Diagram	Q'ty/unit		Remarks
					MSZ-GE24NA	MSY-GE24NA	
1	G	E12 J94 234	BOX ASSEMBLY		1	1	
2	G	E12 F76 000	PANEL ASSEMBLY		1	1	Including No. 3,4,5
3	G	E12 408 142	CATCH		4	4	4 PCS/SET
4	G	E12 F28 067	SCREW CAP		3	3	3 PCS/SET
5	G	E12 F28 010	FRONT PANEL		1	1	
6	G	E12 F28 100	NANO PLATINUM FILTER		2	2	1 PC/SET
7	G	E12 F28 975	CORNER BOX (RIGHT)		1	1	
8	G	E12 F28 976	CORNER BOX (LEFT)		1	1	
9	G	E12 F28 970	INSTALLATION PLATE		1	1	
10	G	-	AIR CLEANING FILTER (ELECTROSTATIC ANTI-ALLERGY ENZYME FILTER)		2	2	MAC-2310FT-E 2 PCS/SET

1-14. ACCESSORY AND REMOTE CONTROLLER

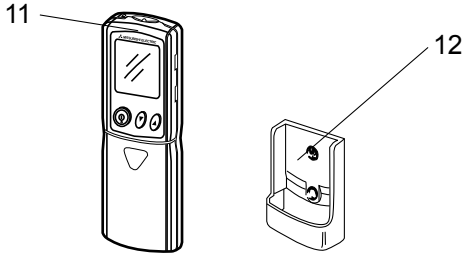

11	G	E12 C26 426	REMOTE CONTROLLER		1		KM07K
	G	E12 C29 426	REMOTE CONTROLLER			1	KM07M
12	G	E12 527 083	REMOTE CONTROLLER HOLDER		1	1	

RoHS PARTS LIST

MSZ-GE24NA
MSY-GE24NA
1-15. INDOOR UNIT ELECTRICAL PARTS AND FUNCTIONAL PARTS

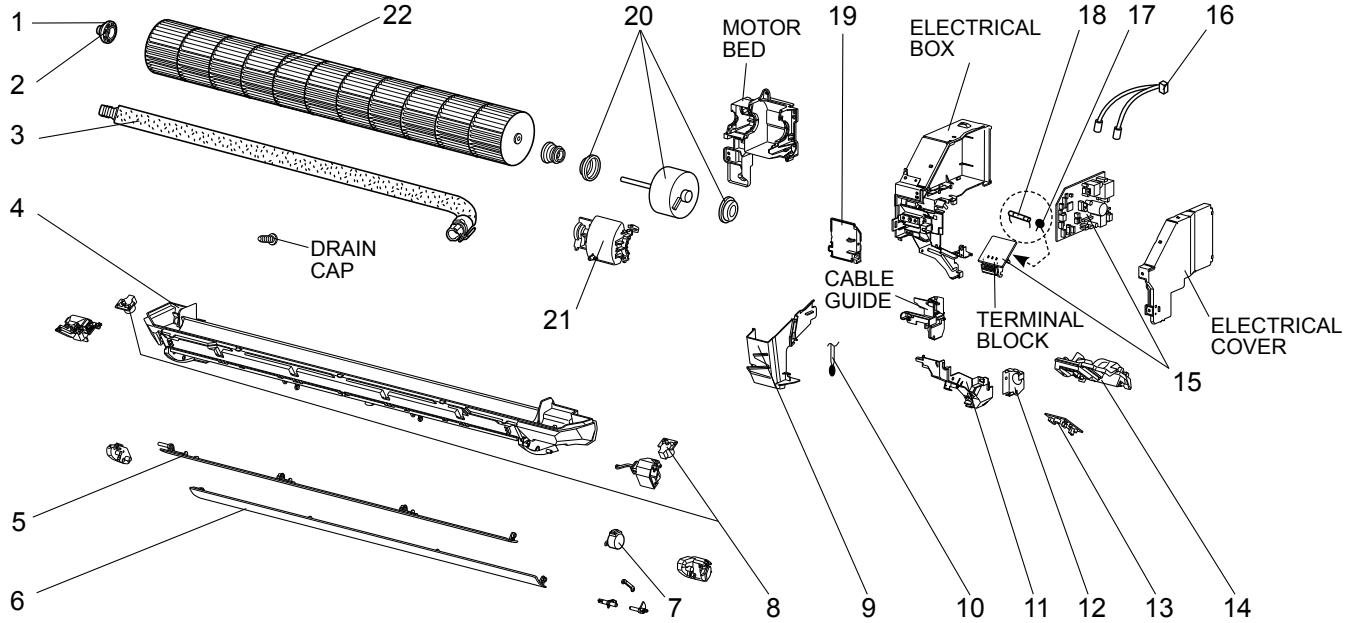

No.	RoHS	Part No.	Part name	Symbol in Wiring Diagram	Q'ty/unit		Remarks
					MSZ-GE24NA	MSY-GE24NA	
1	G	E12 751 509	BEARING MOUNT		1	1	
2	G	E12 001 504	SLEEVE BEARING		1	1	
3	G	E12 408 702	DRAIN HOSE		1	1	
4	G	E12 F76 235	NOZZLE ASSEMBLY		1	1	
5	G	E12 F76 040	VANE (UPPER)		1	1	
6	G	E12 F76 041	VANE (LOWER)		1	1	
7	G	E12 C33 303	VANE MOTOR (HORIZONTAL)	MV1	1	1	UP & DOWN
8	G	E12 C32 303	VANE MOTOR (VERTICAL)	MV2	2	2	RIGHT & LEFT
9	G	E12 F28 541	WATER CUT		1	1	
10	G	E12 C32 308	ROOM TEMPERATURE THERMISTOR	RT11	1	1	
11	G	E12 F76 979	CONDUIT COVER		1	1	
12	G	E12 F76 978	CONDUIT PLATE		1	1	
13	G	E12 F28 468	POWER MONITOR RECEIVER SW P.C. BOARD		1	1	
14	G	E12 F28 095	POWER MONITOR RECEIVER HOLDER		1	1	
15	G	E12 P66 452	ELECTRONIC CONTROL P.C. BOARD ※1		1		
	G	E12 F77 452	ELECTRONIC CONTROL P.C. BOARD ※1			1	
16	G	E12 F28 307	INDOOR COIL THERMISTOR	RT12,RT13	1	1	
17	G	E12 B75 385	VARISTOR	NR11	1	1	
18	G	E12 A49 382	FUSE	F11	1	1	T3.15AL250V
19	G	E12 F76 784	V.A. CLAMP		1	1	
20	G	E12 F28 300	INDOOR FAN MOTOR ※2	MF	1	1	RC0J56-□□
21	G	E12 F28 333	MOTOR BAND		1	1	
22	G	E12 F28 302	LINE FLOW FAN		1	1	

※1 Including TERMINAL BLOCK with TERMINAL P.C. BOARD
※2 Including FAN MOTOR RUBBER MOUNT (2 PCS/SET)

RoHS PARTS LIST

MSZ-GE24NA
MSY-GE24NA
1-16. INDOOR UNIT HEAT EXCHANGER

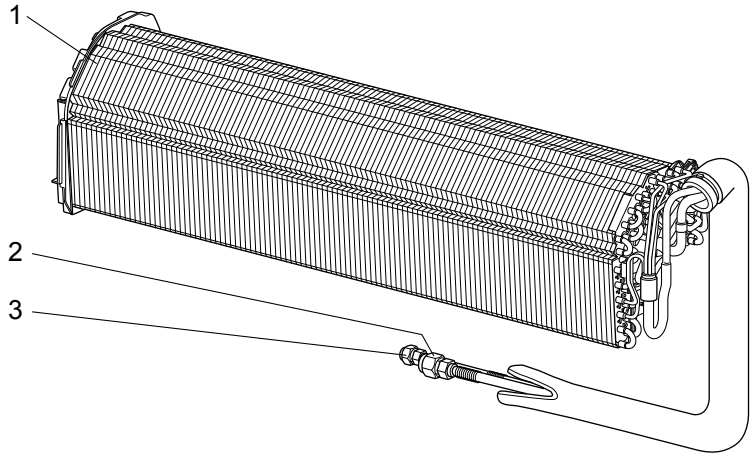

No.	RoHS	Part No.	Part name	Symbol in Wiring Diagram	Q'ty/unit		Remarks
					MSZ-GE24NA	MSY-GE24NA	
1	G	E12 N42 620	INDOOR HEAT EXCHANGER		1	1	
2	G	E12 527 666	UNION (GAS)		1	1	ø5/8
3	G	E12 815 666	UNION (LIQUID)		1	1	ø3/8

2 OPTIONAL PARTS

2-1. AIR CLEANING FILTER

Every 3 months:

● Remove dirt by a vacuum cleaner.

When dirt cannot be removed by vacuum cleaning:

● Soak the filter and its frame in lukewarm water before rinsing it.

● After washing, dry it well in shade.

Every year:

● Replace it with a new air cleaning filter for best performance.

NOTE 1: Clean the filters regularly for best performance and to reduce power consumption.

NOTE 2: Dirty filters cause condensation in the air conditioner which will contribute to the growth of fungi such as mold. It is therefore recommended to clean air filters every 2 weeks.

(ANTI-ALLERGY ENZYME FILTER)

Model			Part No.
MSZ-GE06NA	MSZ-GE06NA - 8	MSZ-GE06NA - 9	MAC-408FT-E
MSZ-GE09NA	MSZ-GE09NA - 8	MSZ-GE09NA - 9	
MSZ-GE12NA	MSZ-GE12NA - 8	MSZ-GE12NA - 9	
MSZ-GE15NA	MSZ-GE15NA - 8	MSZ-GE15NA - 9	
MSZ-GE18NA	MSZ-GE18NA - 8	MSZ-GE18NA - 9	
MSY-GE09NA	MSY-GE09NA - 8	MSY-GE09NA - 9	
MSY-GE12NA	MSY-GE12NA - 8	MSY-GE12NA - 9	
MSY-GE15NA	MSY-GE15NA - 8	MSY-GE15NA - 9	
MSY-GE18NA	MSY-GE18NA - 8	MSY-GE18NA - 9	

Pull to remove from the air flter

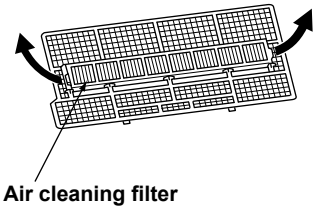

Air cleaning filter
(Blue bellows type)

(ELECTROSTATIC ANTI-ALLERGY ENZYME FILTER)

Model	Part No.
MSZ-GE24NA MSY-GE24NA	MAC-2310FT-E

Air cleaning filter
(Electrostatic anti-allergy enzyme filter)

MITSUBISHI ELECTRIC CORPORATION

HEAD OFFICE: TOKYO BUILDING, 2-7-3, MARUNOUCHI, CHIYODA-KU, TOKYO 100-8310, JAPAN

© Copyright 2009 MITSUBISHI ELECTRIC CORPORATION

Issued: Sep. 2017 No. OBB548 REVISED EDITION-E
Issued: Oct. 2014 No. OBB548 REVISED EDITION-D
Issued: Nov. 2011 No. OBB548 REVISED EDITION-C
Issued: Apr. 2011 No. OBB548 REVISED EDITION-B
Issued: Sep. 2010 No. OBB548 REVISED EDITION-A 5
Published: Jul. 2009 No. OBB548 5
Made in Japan

Specifications are subject to change without notice.