ENGLISH

MITSUBISHI ELECTRIC

JG79N281H05

SPLIT-TYPE AIR CONDITIONERS

INSTALLATION MANUAL

MSZ-GS30/36NA2
MSY-GS30/36NA2

Required tools for installation

Phillips screwdriver	5/32 inch (4 mm) hexagonal wrench
Level	Flare tool for R410A
Scale	Gauge manifold for R410A
Utility knife or scissors	Vacuum pump for R410A
3 inches (75 mm) hole saw	Charge hose for R410A
Torque wrench	Pipe cutter with reamer
Wrench (or spanner)	

1. Before Installation

1-1. The Following Should Always Be Observed for Safety

- Be sure to read these safety precautions and instructions.
- Be sure to observe the warnings and cautions specified here.
- After reading this manual, be sure to store it with the OPERATING INSTRUCTIONS for future reference.
- Please report to your supply authority or obtain their consent before connecting this equipment to the power supply system.

⚠ Warning (Could lead to death or serious injury.)

- **Do not install the unit by yourself (user).**
  Improper or incomplete installation could cause fire, electric shock, injury due to the unit falling, or water leakage. Consult a qualified installer or the dealer from whom you purchased the unit.
- **Follow the instructions detailed in the installation manual.**
  Incomplete installation could cause fire or electric shock, injury due to the unit falling, or leakage of water.
- **When installing the unit, use appropriate protective equipment and tools for safety.**
  Failure to do so could cause injury.
- **Install the unit securely in a place that can bear the weight of the unit.**
  If the installation location cannot bear the weight of the unit, the unit could fall causing injury.
- **Do not alter the unit.**
  It may cause fire, electric shock, injury or water leakage.
- **Perform electrical work according to the installation manual and be sure to use an exclusive circuit. Do not connect other electrical appliances to the circuit.**
  If the capacity of the power circuit is insufficient or there is incomplete electrical work, it could result in a fire or an electric shock.
- **Ground the unit correctly.**
  Do not connect the ground wire to a gas pipe, water pipe, lightning rod or telephone ground. Defective grounding could cause electric shock.
- **Do not damage the wires.**
  Damaged wires could cause fire.
- **Be sure to shut off the main power when setting up the indoor P.C. board or wiring.**
  Failure to do so could cause electric shock.
- **Use the specified wires to securely connect the indoor and outdoor units. Attach the wires firmly to avoid applying stress to the terminal block.**
  Improper connection could cause fire.
- **Do not install the unit in a place where flammable gas may leak.**
  If gas leaks and accumulates around the unit, it could cause an explosion.
- **Do not use intermediate connection of the power cord or the extension cord. Do not connect many devices to one AC outlet.**
  It could cause a fire or an electric shock.
- **Use the parts provided or specified parts for the installation work.**
  The use of defective parts could cause an injury or leakage of water due to a fire, an electric shock, the unit falling, etc.
- **When plugging the power supply plug into the outlet, make sure that there is no dust, blockage, or loose parts both in the outlet and on the plug. Verify that the power supply plug is completely in the outlet.**
  If there is dust, blockage, or loose parts on the power supply plug or the outlet, it could cause electric shock or fire. If loose parts are found on the power supply plug, replace it.
- **Securely attach the electrical cover to the indoor unit and the service panel to the outdoor unit.**
  If the electrical cover of the indoor unit and/or the service panel of the outdoor unit are not attached securely, dust, water, etc. could collect in the unit and could cause a fire or an electric shock.
- **When installing, relocating, or servicing the unit, make sure that no substance other than the specified refrigerant (R410A) enters the refrigerant circuit.**
  Any presence of foreign substance such as air can cause abnormal pressure rise and may result in explosion or injury. The use of any refrigerant other than that specified for the system will cause mechanical failure, system malfunction, or unit breakdown. In the worst case, this could lead to a serious impediment to securing product safety.
- **Do not discharge the refrigerant into the atmosphere. Check that the refrigerant gas does not leak after installation has been completed. If refrigerant leaks during installation, ventilate the room.**
  If refrigerant comes in contact with a fire, harmful gas could be generated.
  If refrigerant gas leaks indoors, and comes into contact with the flame of a fan heater, space heater, stove, etc., harmful gases will be generated.
- **Use appropriate tools and piping materials for installation.**
  The pressure of R410A is 1.6 times higher than R22. Not using the appropriate tools and materials, or improper installation could cause the pipes to burst causing an injury.
- **When pumping down the refrigerant, stop the compressor before disconnecting the refrigerant pipes.**
  If the refrigerant pipes are disconnected while the compressor is running and the stop valve is open, air could be drawn in and the pressure in the refrigeration cycle could become abnormally high, causing the pipes to burst.
- **When installing the unit, securely connect the refrigerant pipes before starting the compressor.**
  If the compressor is started before the refrigerant pipes are connected and the stop valve is open, air could be drawn in and the pressure in the refrigeration cycle could become abnormally high, causing the pipes to burst.
- **Fasten a flare nut with a torque wrench as specified in this manual.**
  If fastened too tight, a flare nut could break and cause refrigerant leakage.
- **Install the unit according to national wiring regulations.**
- **When opening or closing the valve below freezing temperatures, refrigerant may spurt out from the gap between the valve stem and the valve body, resulting in injuries.**
- **Exercise caution when using any auxiliary heat source and follow all third party manufacturer instructions and safety guidelines for installation and usage.**
  Any auxiliary heat source connected to this unit via the CN24 connection must have an independent temperature control mechanism. Failure to install and maintain such temperature control mechanism may void the warranty for this unit. Mitsubishi Electric shall not bear any warranty obligation or other liability for any damage or loss in connection with such third party auxiliary heaters.

⚠ Caution (Could lead to serious injury when operated incorrectly.)

- **Please follow applicable federal, state, or local codes to prevent potential leakage/electric shock. Or install a ground fault interrupt for the prevention of leakage and electric shock.**
- **Perform the drainage/piping work securely according to the installation manual.**
  If there is defect in the drainage/piping work, water could drip from the unit, and damage household items.
- **Do not touch the air inlet or the aluminum fins of the outdoor unit.**
  This could cause injury.
- **Please wear protective equipment when you touch the base of the outdoor unit.**
  It could cause injury if you do not wear the protective equipment.
- **Do not install the outdoor unit where small animals may live.**
  If small animals enter the unit and damage its electrical parts, it could cause a malfunction, smoke emission, or fire. Keep the area around the unit clean.

1-2. Selecting the Installation Location

Indoor Unit

- Where airflow is not blocked.
- Where cool (or warm) air spreads over the entire room.
- On a rigid wall to reduce the possibility of vibration.
- Where it is not exposed to direct sunlight. Do not expose to direct sunlight also during the period following unpacking to before use.
- Where it can be easily drained.
- At a distance 3 feet (1 m) or more away from a TV and radio. Operation of the air conditioner may interfere with radio or TV reception. An amplifier may be required for the affected device.
- In a place as far away as possible from fluorescent and incandescent lights. In order to make the infrared remote control operate the air conditioner normally. The heat from the lights may cause deformation or the ultraviolet may cause deterioration.
- Where the air filter can be removed and replaced easily.
- Where it is away from the other heat or steam source.

Note:
Install the indoor unit high on the wall where air can distribute over the entire room.

Remote Controller

- Where it is convenient to operate and easily visible.
- Where children cannot easily touch it.
- Select a position about 4 feet (1.2 m) above the floor. Check that signals from the remote controller from that position are received by the indoor unit ('beep' or 'beep beep' receiving tone sounds). When the remote controller holder is supplied, install it at a position from which the indoor unit can receive signals.

Note:
In rooms where inverter type fluorescent lamps are used, the signal from the wireless remote controller may not be received.

Outdoor Unit

- Where it is not overly exposed to strong winds.
- Where airflow is good and dustless.
- Where neighbours are not annoyed by operation sound or hot (or cool) air.
- Where rigid wall or support is available to prevent the increase of operation sound or vibration.
- Where there is no risk of combustible gas leakage.
- If installing the unit in a location high above the ground, be sure to secure the unit legs.
- Where it is at least 10 feet (3 m) away from the antenna of TV set or radio. Operation of the air conditioner may interfere with radio or TV reception in areas where reception is weak. An amplifier may be required for the affected device.
- Install the unit horizontally.
- Please install it in an area not affected by snowfall or blowing snow. In areas with heavy snow, please install a canopy, a pedestal and/or baffle boards.

Note:

- It is advisable to make a piping loop near outdoor unit so as to reduce vibration.
- For increased efficiency, install the outdoor unit in a location where continuous direct sunlight or excessive water can be avoided as much as possible.

Note:
When operating the air conditioner in low outside temperature, be sure to follow the instructions described below.

- Never install the outdoor unit in a place where its air inlet/outlet side may be exposed directly to wind.
- To prevent exposure to wind, install the outdoor unit with its air inlet side facing the wall and a baffle board on the air outlet side.

Avoid the following places for installation where air conditioner trouble is liable to occur.

- Where flammable gas could leak.
- Where there is an excessive amount of machine oil in the air.
- Where oil is splashed or where the area is filled with oily smoke (such as cooking areas and factories, in which the properties of plastic could be changed and damaged).
- Salty places such as the seaside.
- Where sulfide gas is generated such as a hot spring.
- Where there is high-frequency or wireless equipment.
- Where there is emission of high levels of VOCs, including phthalate compounds, formaldehyde, etc., which may cause chemical cracking.

1-3. Specifications

1-3-1. Power Supply and Indoor/Outdoor Wire Connection

- Power should be taken from an exclusive branched circuit.
- Wiring work should be based on applicable technical standards.
- Wiring connections should be made following the diagram.
- Securely tighten screws.

Connecting wires and the ground wire

- Use solid conductor Min. AWG14 or stranded conductor Min. AWG14.
- Use double insulated copper wire with 600 V insulation.
- Use copper conductors only.

* Follow local electrical codes.

Power supply cable and ground wire

- Use solid or stranded conductor Min. AWG12.
- Use copper conductors only.

* Follow local electrical codes.

Note:
When the indoor unit is powered from the outdoor unit, depending on local code, a disconnect switch needs to be installed to a power supply circuit.

Electrical specifications

MODEL		MSY-GS30NA2	MSY-GS36NA2	MSZ-GS30NA2	MSZ-GS36NA2
INDOOR UNIT					
Power supply (V, PHASE, Hz)		208/230, 1, 60			
Min. Circuit Ampacity	(A)	1.0			
Fan motor (F.L.A.)	(A)	0.76			
OUTDOOR UNIT					
Power supply (V, PHASE, Hz)		208/230, 1, 60			
Max. Fuse size (time delay)	(A)	25			
Min. Circuit Ampacity	(A)	22			
Fan motor (F.L.A.)	(A)	0.93			
Compressor	(R.L.A) (A)	13.8			
	(L.R.A) (A)	17.3			
Control voltage		Indoor unit - Remote controller: (Wireless) Indoor unit - Outdoor unit: DC12-24 V (Polar)			

1-3-2. Refrigerant Pipes

- To prevent condensation, insulate the two refrigerant pipes.
- Refrigerant pipe bending radius must be 4 inches (100 mm) or more.

⚠ Caution
Be sure to use the insulation of specified thickness (table on the right). Excessive insulation may cause incorrect installation of the indoor unit, and too little insulation may cause condensate to form.

Pipe	Outside diameter	Minimum wall thickness	Insulation thickness	Insulation material
	inch (mm)			
For liquid	1/4 (6.35)	0.0315 (0.8)	5/16 (8)	Heat resistant foam plastic 0.045 Specific gravity
For gas	5/8 (15.88)	0.0394 (1.0)	5/16 (8)	

- The unit has flared connections on both indoor and outdoor sides.
- Remove the valve cover from the outdoor unit, then connect the pipe.
- Refrigerant pipes are used to connect the indoor and outdoor units.
- Be careful not to crush or over bend the pipe in pipe bending.

Limits	
Pipe length	100 feet (30 m) max.
Height difference	50 feet (15 m) max.
No. of bends	10 max.

- Refrigerant adjustment... If pipe length exceeds 25 feet (7.5 m), additional refrigerant (R410A) charge is required.
  (The outdoor unit is charged with refrigerant for pipe length up to 25 feet [7.5 m])
- Please carefully consider the indoor unit location when piping lengths are less than 16 feet (5 m) as there could be intermittent noises during normal operation that would be noticeable in very quiet environments.

Pipe length	Up to 25 feet (7.5 m)	No additional charge is required.
	Exceeding 25 feet (7.5 m)	Additional charge is required. (Refer to the table below.)

Refrigerant to be added	1.08 oz. each 5 feet (20 g/m)

1-4. Installation Diagram

Accessories
Check the following parts before installation.
<Indoor unit>

(1)	Installation plate	1
(2)	Attachment screws for the installation plate 4 × 25 mm	7
(3)	Remote controller holder	1
(4)	Screws for the remote controller holder 3.5 × 16 mm (Black)	2
(5)	Battery (AAA) for (6)	2
(6)	Wireless remote controller	1
(7)	Felt tape (For left or left-rear piping)	2
(8)	Air cleaning filter	2

Field-supplied parts

(A)	Indoor/outdoor unit connecting wire*1	1
(B)	Extension pipe	1
(C)	Wall hole sleeve	1
(D)	Wall hole cover	1
(E)	Pipe attachment strap	2 to 5
(F)	Screw for (E) 4 × 20 mm	2 to 5
(G)	Piping tape	1
(H)	Putty	1
(I)	Drain hose (or soft PVC hose, 15 mm inner diameter or hard PVC pipe VP30)	1
(J)	Drain hose (or soft PVC hose, 15 mm inner diameter or hard PVC pipe VP16)	0 or 1
(K)	Power supply cord*1	1

Note:
*1 Place indoor/outdoor unit connecting wire (A) and power supply cord (K) at least 3 feet (1 m) away from the TV antenna wire.

Units should be installed by licensed contractor according to local code requirements.

Note:
- The dimensions indicated in the arrows (⟺) above show the required space to guarantee performance of the air conditioner. Install the outdoor unit where the maximum possible space can be provided, considering later relocation, services, or repairs.
- The cooling/heating performance and the efficiency of power usage may fall about 10% at the place where short cycle is likely occur due to poor ventilation. Installing the air outlet guide (optional) can improve performances.
- If air from the outlet blows against the wall, it may cause stains on the wall.

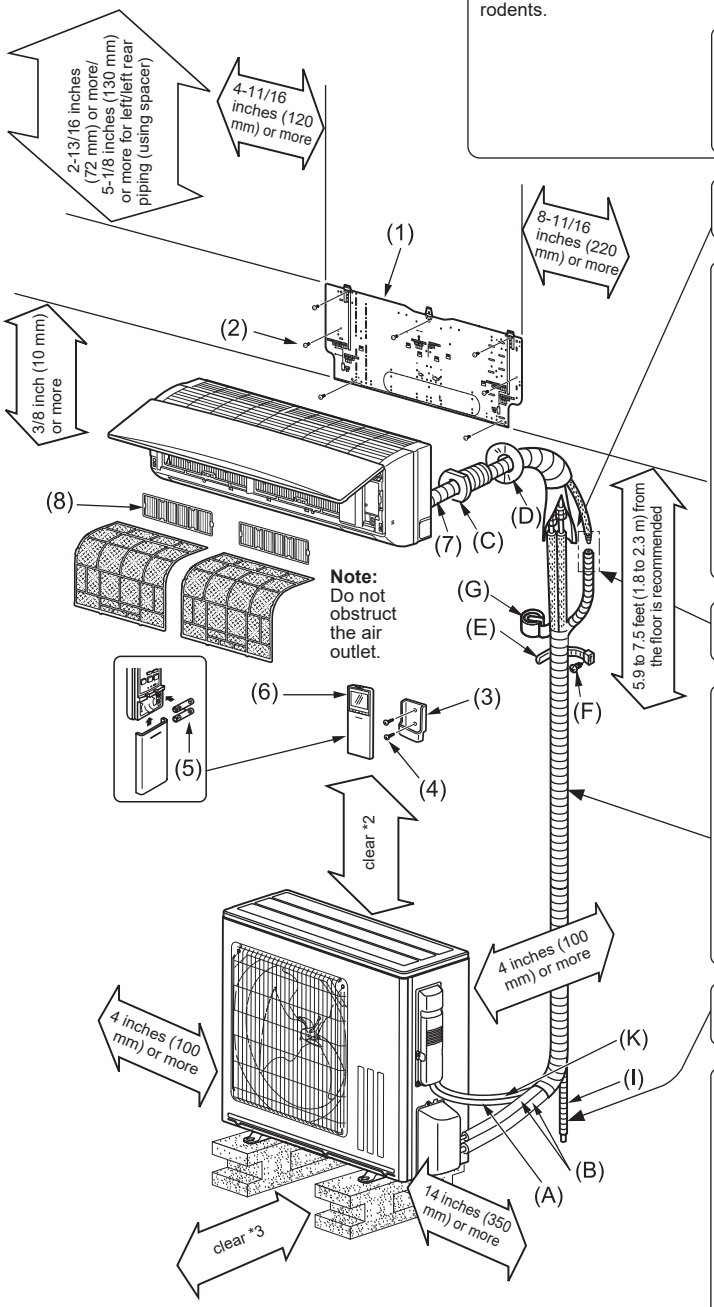

*2 When front and sides of unit are clear, 20 inches (500 mm) or more
*3 When any 2 sides of left, right and rear of unit are clear, 20 inches (500 mm) or more

Use the wall hole sleeve (C) to prevent indoor/outdoor connecting wire (A) from contacting metal parts in the wall and to protect the wiring from rodents.

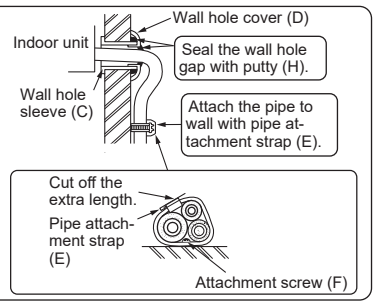

After the leak test, apply insulating material tightly so that there is no gap.

Space for indoor unit working
Please leave the space as shown in the picture for maintenance usage.

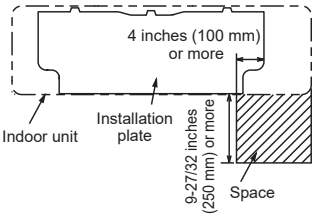

Cover the connection part with tape to prevent water from leaking.

When the piping is to be attached to a wall comprised of tin plate or metal netting, use chemically treated wooden piece 25/32 inch (20 mm) or thicker between the wall and the piping, or wrap insulation vinyl tape around the piping.
To use existing piping, perform COOL operation for 30 minutes and pump down before removing the old air conditioner.
Remake flare according to the dimension for new refrigerant.

Do not block the inlet of the outdoor unit with the excess part of the pipes.

Outdoor unit installation

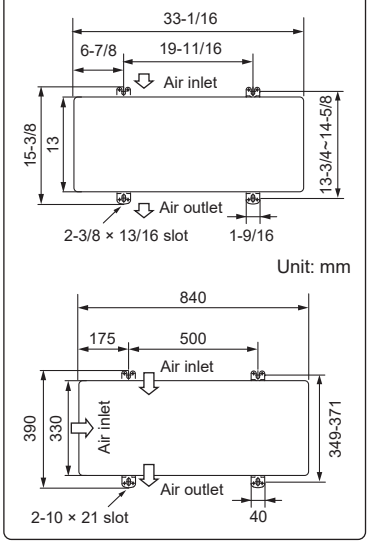

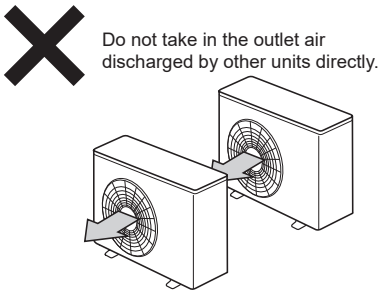
Do not take in the outlet air discharged by other units directly.

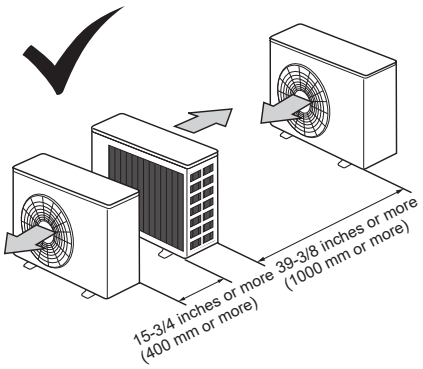

Drain piping for outdoor unit
Install the unit horizontally.
Do not use drain socket in cold regions. Drain may freeze and make the fan stop.
The outdoor unit produces condensate during the heating operation. Select the installation place to ensure to prevent the outdoor unit and/or the grounds from being wet by drain water or damaged by frozen drain water.

2. Indoor Unit Installation

2-1. Attaching the Installation Plate

- Find a stud in the wall to attach installation plate (1) horizontally by tightening the fixing screws (2) firmly.
- To prevent installation plate (1) from vibrating, be sure to install the attachment screws in the holes indicated in the illustration. For added support, additional screws may also be installed in other holes.
  When the indoor unit is to be attached to a concrete wall using recessed bolts, secure installation plate (1) using 7/16 inch × 13/16 inch · 7/16 inch × 1 inch (11 mm × 20 mm · 11 mm × 26 mm) oval hole (17-3/4 inches [450 mm] pitch).
- If the recessed bolt is too long, change it for a shorter one (field-supplied).

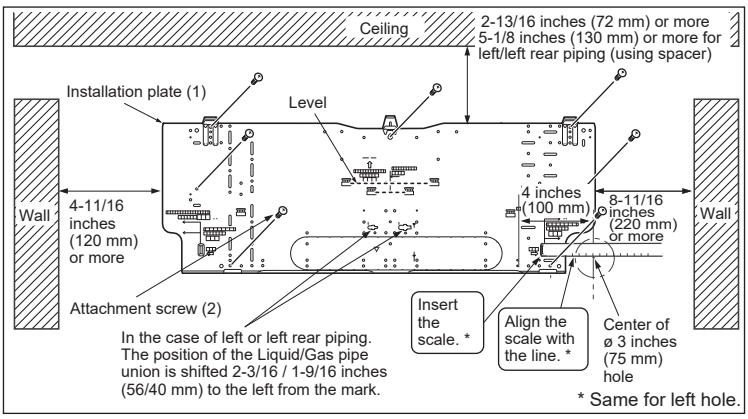

2-2. Drilling

1) Determine where the holes will be located on the wall.
2) Drill a ø 3 inches (75 mm) hole. The outdoor side should be 6/32 to 9/32 inch (5 to 7 mm) lower than the indoor side.
3) Insert wall hole sleeve (C).

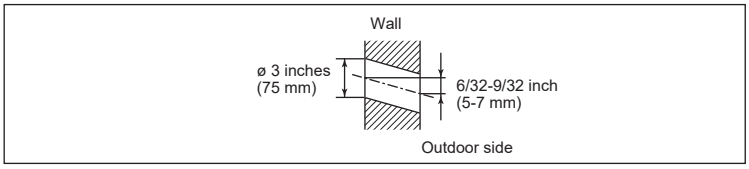

2-3. Connecting Wires for the Indoor Unit

Note:
When the indoor unit is powered from the outdoor unit, depending on local code, a disconnect switch needs to be installed to a power supply circuit.

1) Open the front panel.
2) Place the upper part of the indoor unit on the installation plate.
3) Remove electrical cover.
4) Remove VA clamp.
5) Remove corner box.
6) Remove cable guide.
7) Remove conduit plate.
8) Attach conduit pipe (for rear piping) / elbow joint (for right, left, or downward piping) to conduit plate with lock nut. The thread of the installed conduit pipe / elbow joint appearing inside should be less than 3/8 inch (10 mm). (Fig. 1) Elbow joint should appear less than 1-3/16 inches (30 mm) outside. (Fig. 2)
9) Process the end of ground wire (Fig. 3). Connect it to the ground terminal of electrical parts box.
10) Process the end of indoor/outdoor unit connecting wire (A) (Fig. 3). Attach it to the terminal block. Be careful not to make mis-wiring. Attach the wire to the terminal block securely so that its core cannot be seen, and no external force affects the connecting section of the terminal block.
11) Firmly tighten the terminal screws. After tightening, verify that the wires are tightly fastened.
12) Reinstall conduit plate.
13) Reinstall cable guide.
14) According to the piping direction, remove the shaded part of the left side of box (Fig. 4) or corner box (Fig. 5).
15) Reinstall VA clamp.
16) Reinstall electrical cover.
17) Reinstall panel assembly.

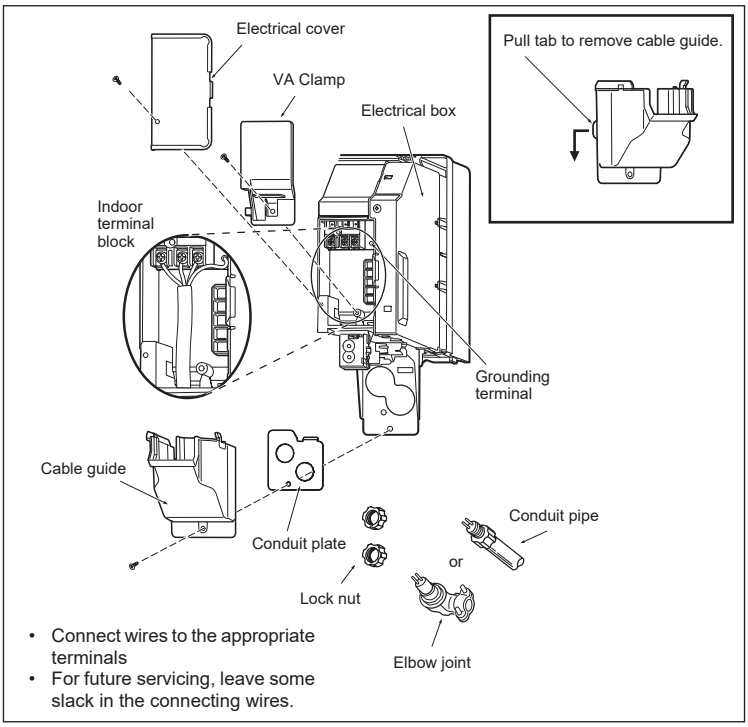

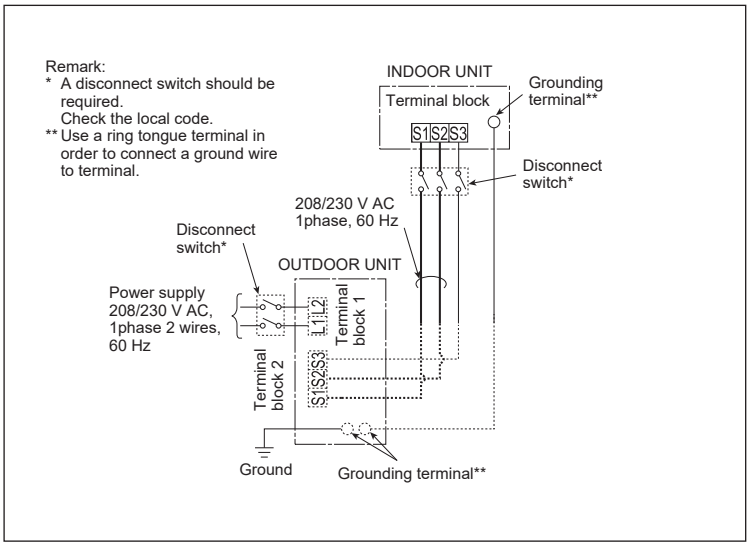

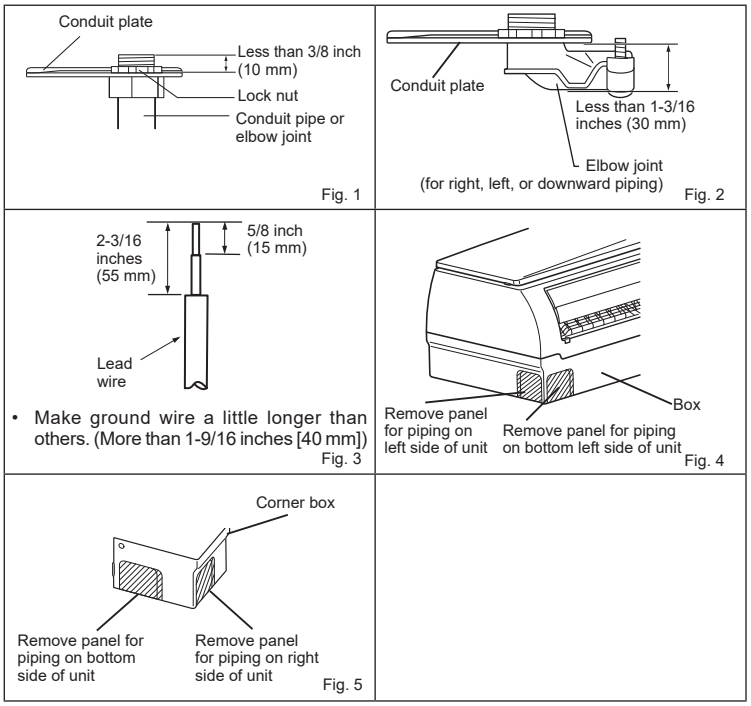

2-4. Pipe Forming and Drain Piping

2-4-1. Pipe Forming

- Place the drain hose below the refrigerant piping.
- Make sure that the drain hose is not crowded or bent.
- Do not pull the hose when applying the tape.
- When the drain hose passes the room, be sure to wrap it with insulation material (field-supplied).

Note:
Make sure not to damage the cover of refrigerant pipe when attaching it back on with screws.

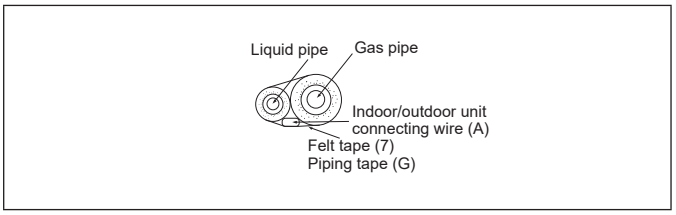

Left or left-rear piping

Note:
Be sure to reattach the drain hose and the drain cap if the piping is being installed on left or bottom left of unit, otherwise, water could drip down from the drain hose.

1) Place the refrigerant piping and the drain hose together, then firmly apply felt tape (7) from the end.
   Felt tape (7) overlap width should be 1/3 the tape width. Use a bandage stopper at the end of felt tape (7).
2) Pull out the drain cap at the back right of the indoor unit. (Fig. 1)
   - Hold the convex section at the end and pull the drain cap.
3) Pull out the drain hose at the back left of the indoor unit. (Fig. 2)
   - Hold the claw marked by the arrows and pull out the drain hose forward.
4) Put the drain cap into the section to which the drain hose is to be attached at the rear of the indoor unit. (Fig. 3)
   - Insert a screwdriver into the hole on the cap and insert the cap fully into the drain pan.
5) Insert the drain hose fully into the drain pan at the back right of the indoor unit. (Fig. 4)
   - Check if the hose is hooked securely to the projection of its inserting part at the drain pan.
6) Insert the drain hose into wall hole sleeve (C), and attach the upper part of indoor unit onto the installation plate (1). Then, shift the indoor unit completely to the left to make placing the piping in the back of the unit easier.
7) Cut out two pieces of cardboard from the shipping box (use any two pieces of the four pieces), roll each piece, hook them onto the back rib, and use them as spacer to lift the indoor unit. (Fig. 5)
8) Connect the refrigerant piping with the extension pipe (B).
9) Attach the lower part of the indoor unit into the installation plate (1).

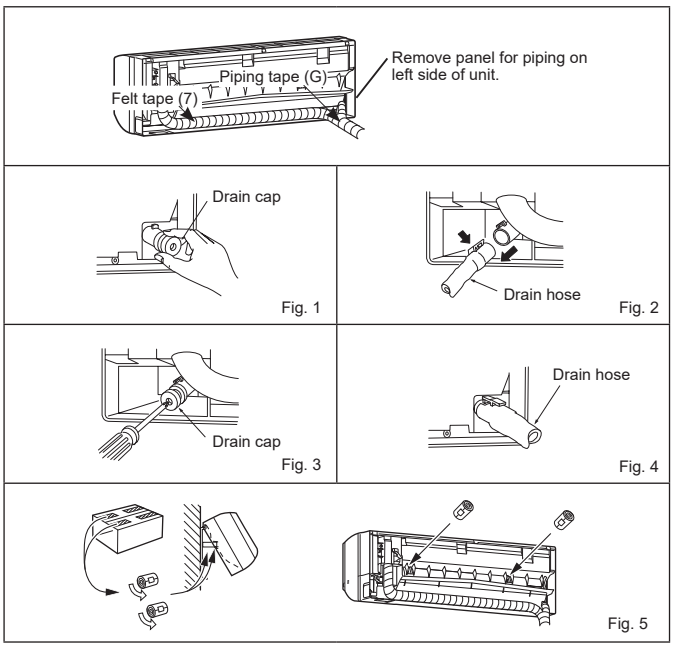

Rear or bottom piping

1) Place the refrigerant piping and the drain hose together, then firmly apply piping tape (G) from the end.
2) Insert the piping and the drain hose into the wall hole sleeve (C), and attach the upper part of the indoor unit on the installation plate (1).
3) Check if the indoor unit is attached securely on the installation plate (1) by moving the unit to left and right.
4) Attach the lower part of the indoor unit into the installation plate (1).

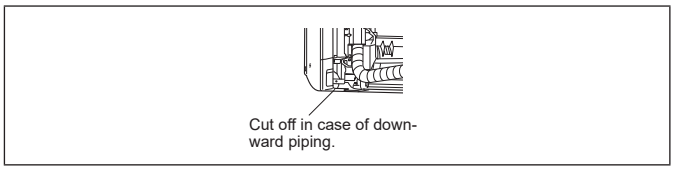

Right piping

Note:
Before performing the following, make sure that wiring is completed, and the conduit cover is installed. (Refer to 2-3.)

1) Place the refrigerant piping and the drain hose together, shift them to left side of the unit, and then firmly apply piping tape (G) from the end.
2) Insert the piping and the drain hose into the wall hole sleeve (C), and attach the upper part of the indoor unit on the installation plate (1).
3) Check if the indoor unit is attached securely on the installation plate (1) by moving the unit to left and right.
4) Attach the lower part of the indoor unit into the installation plate (1).

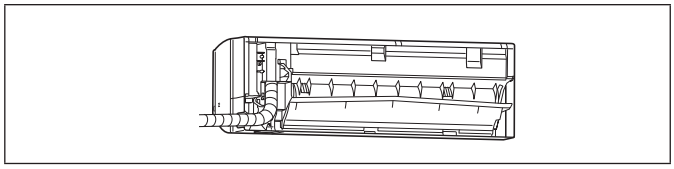

2-4-2. Drain Piping

- Do not cut the drain hose of the unit. (Fig. 1)
- If the extension drain hose has to pass through a room, be sure to wrap it with insulation (field-supplied).
- The drain hose should point downward for easy drain. (Fig. 2)
- If the drain hose provided with the indoor unit is too short, connect it with a field-supplied drain hose (I). (Fig. 3)
- When connecting the drain hose to a hard vinyl chloride pipe, be sure to insert it securely into the pipe. (Fig. 4)
- Make sure that no stress is applied to the connecting portion of the drain hose after installing the indoor unit. Otherwise, breakage or water leakage may result.
- Be sure to use the drain hose attached to the indoor unit. Otherwise, water leakage or breakage due to chemical may result.
- Do not apply any agent on the drain port. Doing so may cause breakage.

Do not put the drain pipe directly in a drainage ditch where Ammonia or Sulphuric gas may be generated. The evaporated corrosive gas may return to the indoor side through drain pipe and this may cause an unpleasant odor and corrosion on Heat exchanger may occur.

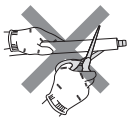

Fig. 1

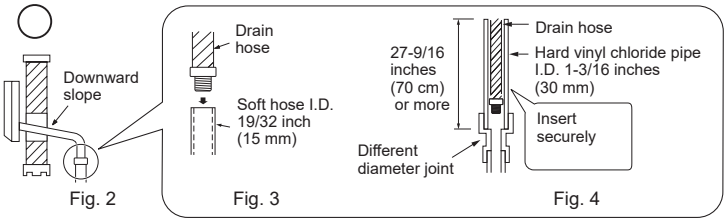

Do not make drain piping as shown below.

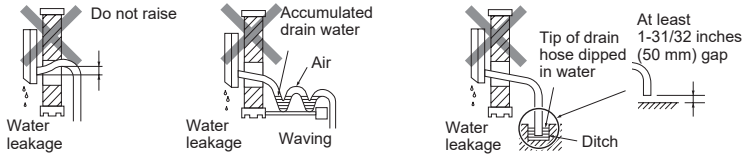

3. Outdoor Unit Installation

3-1. Connecting Wires for the Outdoor Unit

1) Remove the service panel.
2) Remove the conduit cover.
3) Attach the conduit connector to conduit plate with lock nut then secure it against unit with screws.
4) Connect ground wires of indoor/outdoor unit connecting wire (A) and power supply cord (K) to the TB support.
5) Loosen the terminal screw, and attach indoor/outdoor unit connecting wire (A) from the indoor unit correctly on the terminal block. Attach the wire to the terminal block securely so that its core cannot be seen, and no external force affects the connecting section of the terminal block.
6) Firmly tighten the terminal screws. After tightening, verify that the wires are tightly fastened.
7) Connect power supply cord (K).
8) Install the conduit cover.
9) Install the service panel securely.

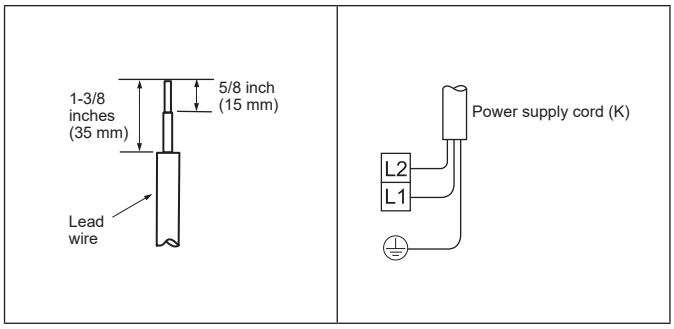

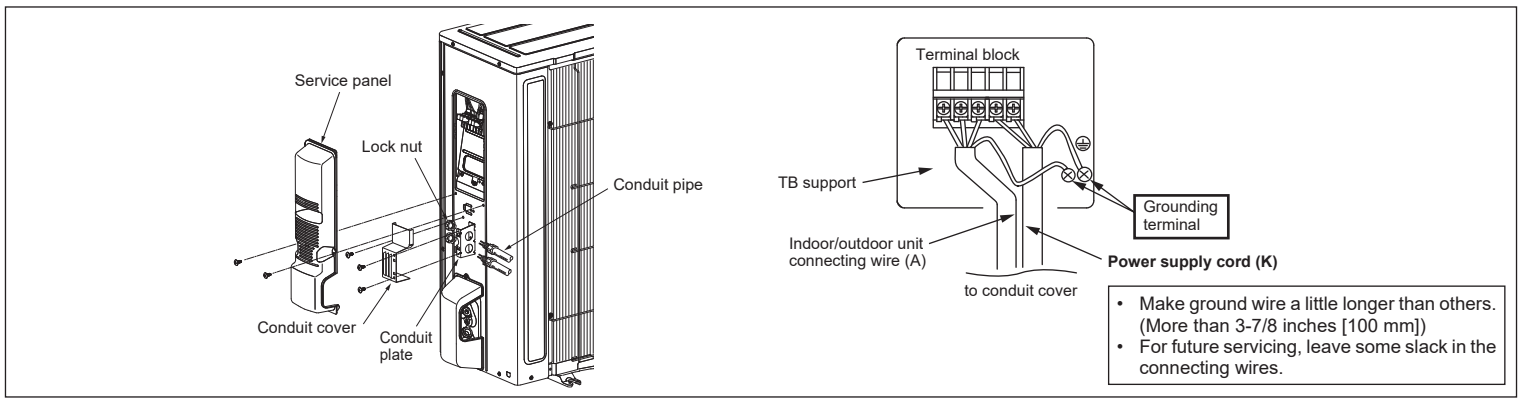

Pipe diameter inch (mm)	B inch (mm)	A inch (mm)			Tightening torque	
		Clutch type tool for R410A	Clutch type tool for R22	Wing nut type tool for R22	ft-lb (kgf•cm)	N•m
ø 1/4 (6.35)	21/32 (17)	0 to 0.02 (0 to 0.5)	0.04 to 0.06 (1.0 to 1.5)	0.06 to 0.08 (1.5 to 2.0)	10 to 13 (140 to 180)	13.7 to 17.7
ø 3/8 (9.52)	7/8 (22)				25 to 30 (350 to 420)	34.3 to 41.2
ø 1/2 (12.7)	1-1/32 (26)			0.08 to 0.10 (2.0 to 2.5)	36 to 42 (500 to 575)	49.0 to 56.4
ø 5/8 (15.88)	1-5/32 (29)				54 to 58 (750 to 800)	73.5 to 78.4

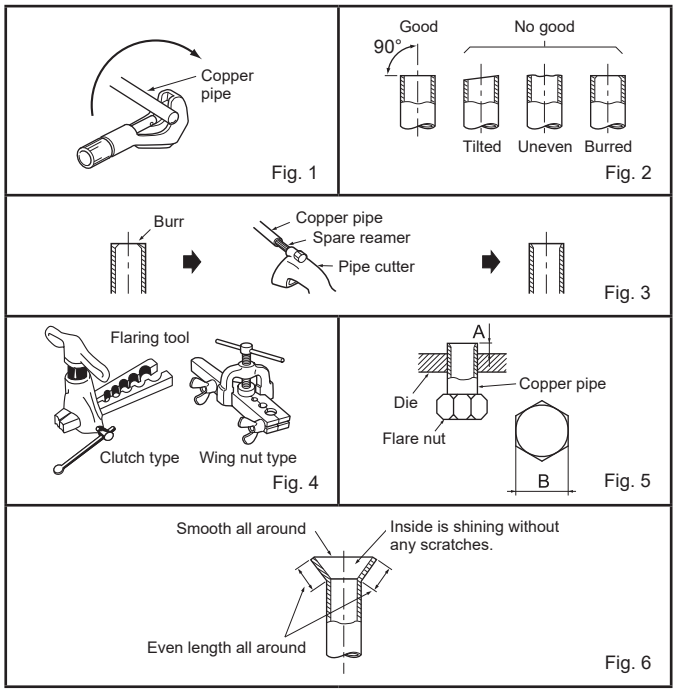

3-2. Flare Connection

1) Cut the copper pipe as straight as possible with a pipe cutter. (Fig. 1, 2)
2) Remove all burrs from the cut section of the pipe, ensuring that precautions are taken to avoid getting metal shavings into the piping. (Fig. 3)
3) Remove flare nuts attached to indoor and outdoor units, then put them on pipe.
4) Flaring work (Fig. 4, 5). Firmly hold copper pipe in the dimension shown in the table. Select A inch (mm) from the table according to the tool you use.
5) Check
   - Compare the flared work with Fig. 6.
   - If flare is defective, cut off the section and repeat procedure.

3-3. Pipe Connection

- Fasten flare nut with a torque wrench as specified in the table above.
- When fastened too tight, flare nut may eventually break and cause refrigerant leakage.
- Be sure to wrap insulation around the piping. Direct contact with the bare piping may result in burns or frostbite.

Indoor unit connection

Connect both liquid and gas piping to indoor unit.

- Do not apply refrigeration oil on screw threads. Excessive tightening torque will result in damage on the screw.
- To connect, first align the center, then tighten the first 3 to 4 turns of flare nut, by hand.
- Use tightening torque table above as a guideline for indoor unit side joints, and tighten using two wrenches. Excessive tightening damages the flare section.

Outdoor unit connection

Connect pipes to stop valve pipe joint of the outdoor unit following the same procedure detailed in Indoor unit connection.

- For tightening, use a torque wrench or spanner.

⚠ Warning

When installing the unit, securely connect the refrigerant pipes before starting the compressor.

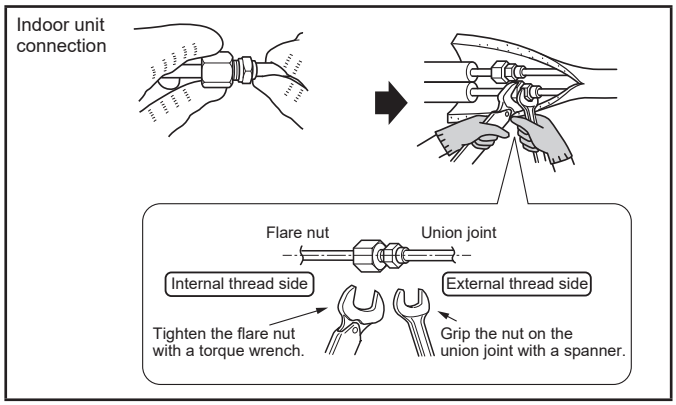

3-4. Insulation and Taping

1) Cover piping joints with pipe cover.
2) For outdoor unit side, insulate the piping, including valves.
3) Apply piping tape (G) starting from the connection on the outdoor unit.
   - When piping has to be installed through a ceiling, closet or where the temperature and humidity are high, use additional field-supplied insulation to prevent condensation.

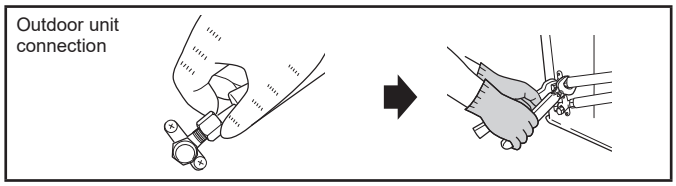

4. Purging Procedures, Leak Test, and Test Run

4-1. Purging Procedures and Leak Test

1) Remove service port caps from stop valves on both sides of refrigerant lines. (The stop valves are fully closed when shipped.) Leave closed.
2) Connect gauge manifold to ports of stop valves.
3) Evacuate the system to 4000 microns from both service valves. System manifold gauges must not be used to measure vacuum. A micron gauge must be used at all times. Break the vacuum with Nitrogen(N2) into the discharge service valve to 0 PSIG.
4) Evacuate the system to 1500 microns. Break the vacuum with Nitrogen(N2) into the discharge service valve to 0 PSIG.
5) Evacuate the system to 500 microns.
6) Close gauge manifold valves, stop the pump, and conduct a 30 minute rise test.
7) System should hold 500 microns for a minimum of 1 hour.
8) Fully open the valve stem of all stop valves on both sides of gas pipe and liquid pipe by the hexagonal wrench. If the valve stem hits the stopper, do not turn it any further. Operating without fully opening lowers the performance and this causes trouble.
9) Refer to 1-3 and charge the prescribed amount of additional refrigerant if needed. Be sure to charge slowly with liquid refrigerant. Otherwise composition of the refrigerant in the system may be changed and affect performance of the air conditioner.
10) Remove gauge manifolds and replace service port caps and tighten.
11) Leak test

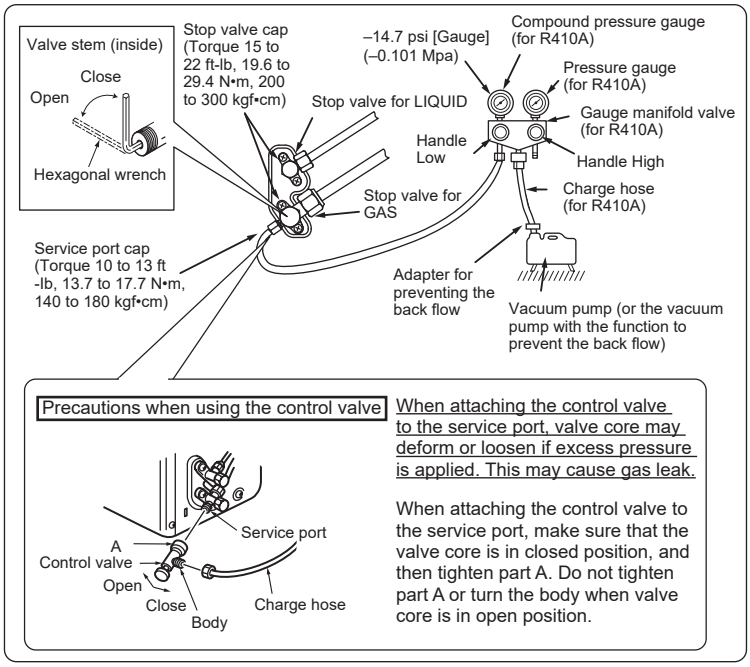

4-2. Test Run

1) Insert power supply plug into the power outlet and/or turn on the breaker.
2) Pressing the E.O. SW will perform a test run for 30 minutes. (For MSZ, pressing the switch once will perform COOL operation and twice will perform HEAT operation.) If the left lamp of the operation indicator light blinks every 0.5 seconds, inspect the indoor/outdoor unit connecting wire (A) for mis-wiring. After the test run, emergency mode (75°F [24°C]) will start.
3) To stop operation, press the E.O. SW several times until all LED lamps turn off. Refer to operating instructions for details.

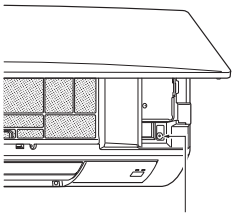

Emergency operation switch (E.O. SW)

Checking the remote (infrared) signal reception
Press the OFF/ON button on the remote controller and listen for an audible indicator from the indoor unit. Press the OFF/ON button again to turn the air conditioner off.

- Once the compressor stops, the restart preventive device operates so the compressor will not operate for 3 minutes to protect the air conditioner.

4-3. Auto Restart Function

This product is equipped with an auto restart function. When the power supply is cut off during operation, such as during blackouts, the function automatically starts operation in the previous setting once the power supply is resumed. (Refer to the operating instructions for details.)

Caution:

- After test run or remote signal reception check, turn off the unit with the E.O. SW or the remote controller before turning off the power supply. If this procedure is not performed, the unit will automatically begin operation when power supply is resumed.

To the user

- After installing the unit, explain to the user about auto restart function.
- If auto restart function is unnecessary, it can be deactivated. Consult the service representative to deactivate the function. Refer to the service manual for details.

4-4. Explanation to the User

- Using the OPERATING INSTRUCTIONS, explain to the user how to use the air conditioner (the remote controller, removing the air filters, placing or removing the remote controller from the remote controller holder, cleaning methods, precautions for operation, etc.)
- Recommend that the user read the OPERATING INSTRUCTIONS carefully.

5. Relocation and Maintenance

5-1. Removing and Installing the Panel Assembly

Removal procedure (Fig. 1, 2)

1) Remove the three screws that attach the panel assembly.
2) Open the front panel.
3) Remove the two screws that attach the panel assembly.
4) Close the front panel.
5) Remove the panel assembly. Be sure to remove its bottom end first.

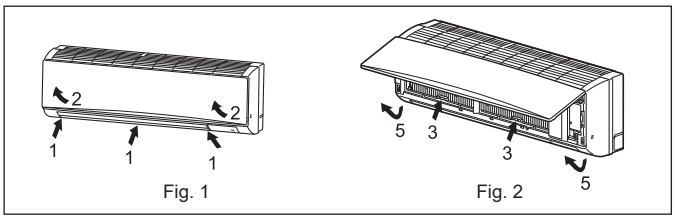

Installation procedure (Fig. 3, 4)

1) Point the horizontal vane slightly downward.
2) Attach the bottom of the panel assembly under the horizontal vane.
3) Fit in the top of the panel assembly.
4) Fit in the bottom of the panel assembly and tighten it using screws.
5) Push the section of the front panel marked by the arrows to close the front panel securely.

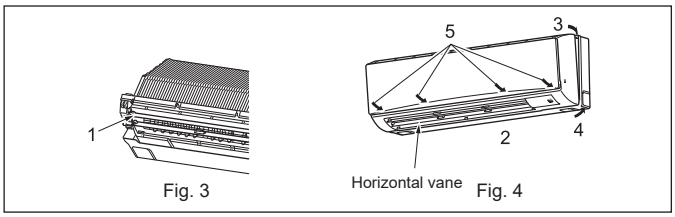

*Do not hold the A part when installing/removing or carrying the panel, or the panel might be damaged.

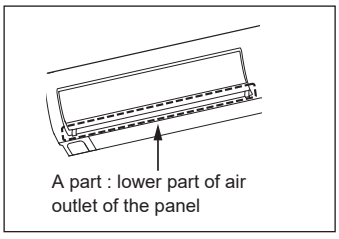

5-2. Removing the Indoor Unit

Remove the bottom of the indoor unit from the installation plate. (Fig. 1, 2)

- Remove the panel assembly. (Refer to 5-1)
- Insert flat screwdrivers into the square holes at the left and right bottom of the indoor unit and push them up; the bottom of the indoor unit goes down and the hooks are released.
  *1 Remove the screw.
  *2 Remove the tab of corner box from the indoor unit, and pull the corner box.
  *3 Pull the indoor unit to remove.

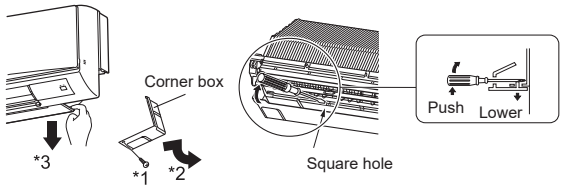

Fig. 1 Fig. 2

5-3. Pumping Down

When relocating or disposing of the air conditioner, pump down the system following the procedure below so that refrigerant is not released into the atmosphere.

1) Connect the gauge manifold valve to the service port of the stop valve on the gas pipe side of the outdoor unit.
2) Fully close the stop valve on the liquid pipe side of the outdoor unit.
3) Close the stop valve on the gas pipe side of the outdoor unit almost completely so that it can be easily closed fully when the pressure gauge shows 0 psi [Gauge] (0 Mpa).
4) Start the emergency COOL operation.
   To start the emergency operation in COOL mode, disconnect the power supply plug and/or turn off the breaker. After 15 seconds, connect the power supply plug and/or turn on the breaker, and then press the E.O. SW once. (The emergency COOL operation can be performed continuously for up to 30 minutes.)
5) Fully close the stop valve on the gas pipe side of the outdoor unit when the pressure gauge shows (0.1 to 0 psi [Gauge] (0.05 to 0 Mpa)).
6) Stop the emergency COOL operation.
   To stop operation, press the E.O. SW several times until all LED lamps turn off. Refer to operating instructions for details.

⚠ Warning

When pumping down the refrigerant, stop the compressor before disconnecting the refrigerant pipes. The compressor may burst if air etc. get into it.

6. Connecting the Interface/Connector Cable to the Air Conditioner

- Connect the INTERFACE/CONNECTOR CABLE to the Indoor electronic control P.C. board of the air conditioner with the connecting cable.
- Cutting or extending the connecting cable of the INTERFACE/CONNECTOR CABLE results in defects in connecting.
  Do not bundle the connecting cable together with power supply cord, indoor/outdoor connecting wire, and/or earth wire. Keep as much distance as possible between the connecting cable and those wires.
- The thin part of the connecting cable should be stored and placed where customers cannot touch it.

Connecting

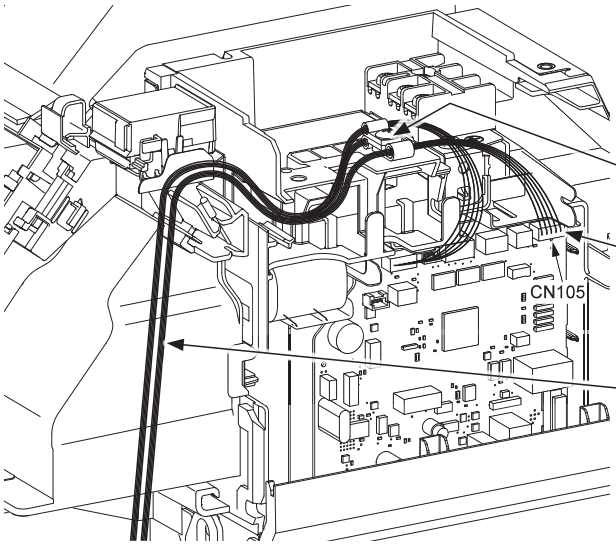

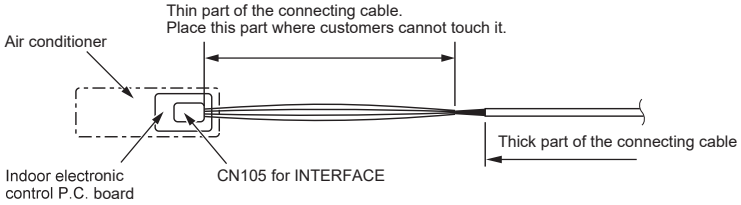

① Remove the panel and the lower right corner box.

② Open the covers of the Indoor electronic control P.C. board.

③ Connect the connecting cable to CN105 on the Indoor electronic control P.C. board.

④ Attach the cable clamp provided with Interface to the thick part of the connecting cable with a screw 4×16 as shown in the figure.

⑤ Pass the connecting cable through the rib as shown in the figure.

⑥ Close the covers of the Indoor electronic control P.C. board. Be careful not to catch the thin part of the connecting cable in the cover. Reinstall the panel and the lower right corner box.

⚠ Warning

Fix the connecting cable at the prescribed position securely. Incorrect installation may cause electric shock, fire, and/or malfunction.

MITSUBISHI ELECTRIC CORPORATION

HEAD OFFICE: TOKYO BUILDING, 2-7-3, MARUNOUCHI, CHIYODA-KU, TOKYO 100-8310, JAPAN