MITSUBISHI ELECTRIC

Mr. SLIM®
Split-ductless A/C and Heat Pumps

SUBMITTAL DATA: MSZ-FD09NA & MUZ-FD09NA

9,000 BTU/H WALL-MOUNTED HEAT PUMP SYSTEM

Job Name: Location: Date:

Purchaser: Engineer:

Submitted to: For ☐ Reference ☐ Approval ☐ Construction

Unit Designation: Schedule No.:

GENERAL FEATURES

- Highly energy-efficient system with quiet operation
- Updated sleek, compact indoor unit design
- Includes Standard, Platinum Deodorizing, and Anti-allergy Enzyme Filters for a complete air purifying system
- "Powerful Mode" function permits system to temporarily run at a lower/higher temperature with an increased fan speed, which quickly brings the room to the optimum comfort level
- Integrated i-see sensor automatically detects room air temperature
- Autochangeover for cooling and heating
- Wireless remote controller
- Limited warranty: five years on parts and defects and seven years on compressors

OPTIONAL ACCESSORIES

Outdoor Unit

- Drain Socket (MAC-851DS)

Indoor Unit

- M-NET Control Adapter (MAC-399IF)
- MA Contact Terminal Interface (MAC-397IF)
- Wired Remote Controller (PAR-21MAA; Requires MAC-3971F)
- Condensate Pump (SI3100-230; 230V)
- Replacement Platinum Deodorizing Filter (MAC-308FT)
- Replacement Anti-allergy Enzyme Filter (MAC-418FT; MERV 8)

Cooling*

Rated Capacity . . . . . 9,000 Btu/h
Minimum Capacity . . . . . 2,800 Btu/h
SEER . . . . . 25.0 Btu/h/W
Total Input . . . . . 650 W

Heating at 47° F*

Rated Capacity . . . . . 10,900 Btu/h
Minimum Capacity . . . . . 3,000 Btu/h
HSPF . . . . . 10.00 Btu/h/W
Total Input . . . . . 750 W

Heating at 17° F*

Maximum Capacity . . . . . 12,500 Btu/h
Total Input at Maximum Capacity . . . . . 1,730 W
Rated Capacity* . . . . . 5,500 Btu/h
Total Input* . . . . . 540 W

* Rating Conditions (Cooling) - Indoor: 80°F (27°C) DB, 67°F (19°C) WB; Outdoor: 95°F (35°C) DB, 75°F (24°C) WB.
(Heating at 47°F) - Indoor: 70°F (21°C) DB, 60°F (16°C) WB; Outdoor: 47°F (8°C) DB, 43°F (6°C) WB.
(Heating at 17°F) - Indoor: 70°F (21°C) DB, 60°F (16°C) WB; Outdoor: 17°F (-8°C) DB, 15°F (-9°C) WB.

Power Supply . . . . . 208 / 230V, 1-Phase, 60 Hz
Breaker Size . . . . . 15 A

Voltage

Indoor - Outdoor S1-S2 . . . . . AC 208 / 230V
Indoor - Outdoor S2-S3 . . . . . DC 12-24V
Indoor - Remote Controller . . . . . Wireless

OPERATING RANGE

		Indoor Intake Air Temp.	Outdoor Intake Air Temp.
Cooling	Maximum	90°F (32°C) DB, 73°F (23°C) WB	115°F (46°C) DB
	Minimum	67°F (19°C) DB, 57°F (14°C) WB	14°F (-10°C) DB
Heating	Maximum	80°F (27°C) DB, 67°F (19°C) WB	75°F (24°C) DB, 65°F (18°C) WB
	Minimum	70°F (21°C) DB, 60°F (16°C) WB	5°F (-15°C) DB, 4°F (-16°C) WB

Indoor Unit: MSZ-FD09NA

Wireless Remote Controller

Outdoor Unit: MUZ-FD09NA

Indoor Unit

MCA . . . . . 1 A
Fan Motor . . . . . 0.76 F.L.A.
Airflow
Cooling (Lo - Med - Hi - Powerful) . . . . 162 - 226 - 339 - 381 Dry CFM
144 - 202 - 307 - 343 Wet CFM
Heating (Lo - Med - Hi - Powerful) . . . . 166 - 240 - 367 - 381 Dry CFM
Sound Pressure Level
Cooling (Lo - Med - Hi - Powerful) . . . . . 22 - 31 - 39 - 42 dB(A)
Heating (Lo - Med - Hi - Powerful) . . . . . 22 - 31 - 40 - 42 dB(A)

DIMENSIONS	UNIT INCHES / MM
W	31-7/16 / 799
D	10-1/8 / 257
H	11-5/8 / 295

Weight . . . . . 27 lbs. / 12 kg
External Finish . . . . . Munsell No. 1.0Y 9.2 / 0.2
Field Drainpipe Size O.D. . . . . 5/8" / 15.88 mm

Outdoor Unit

Compressor . . . . . DC Inverter-driven Rotary
MCA . . . . . 12 A
Fan Motor . . . . . 0.56 F.L.A.
Sound Pressure Level
Cooling / Heating . . . . . 48 / 49 dB(A)

DIMENSIONS	INCHES / MM
W	31-1/2 / 800
D	11-1/4 / 286
H	21-5/8 / 549

Weight . . . . . 80 lbs. / 36 kg
External Finish . . . . . Munsell No. 3.0Y 7.8 / 1.1

Refrigerant Type R410A
Refrigerant Pipe Size O.D.
Gas Side . . . . . 3/8" / 9.52 mm
Liquid Side . . . . . 1/4" / 6.35 mm
Max. Refrigerant Pipe Length . . . . . 65' / 20 m
Max. Refrigerant Pipe Height Difference . . . . . 40' / 12 m
Connection Method . . . . . Flared

R410A INVERTER

DIMENSIONS: MSZ-FD09NA & MUZ-FD09NA

MSZ-FD09NA

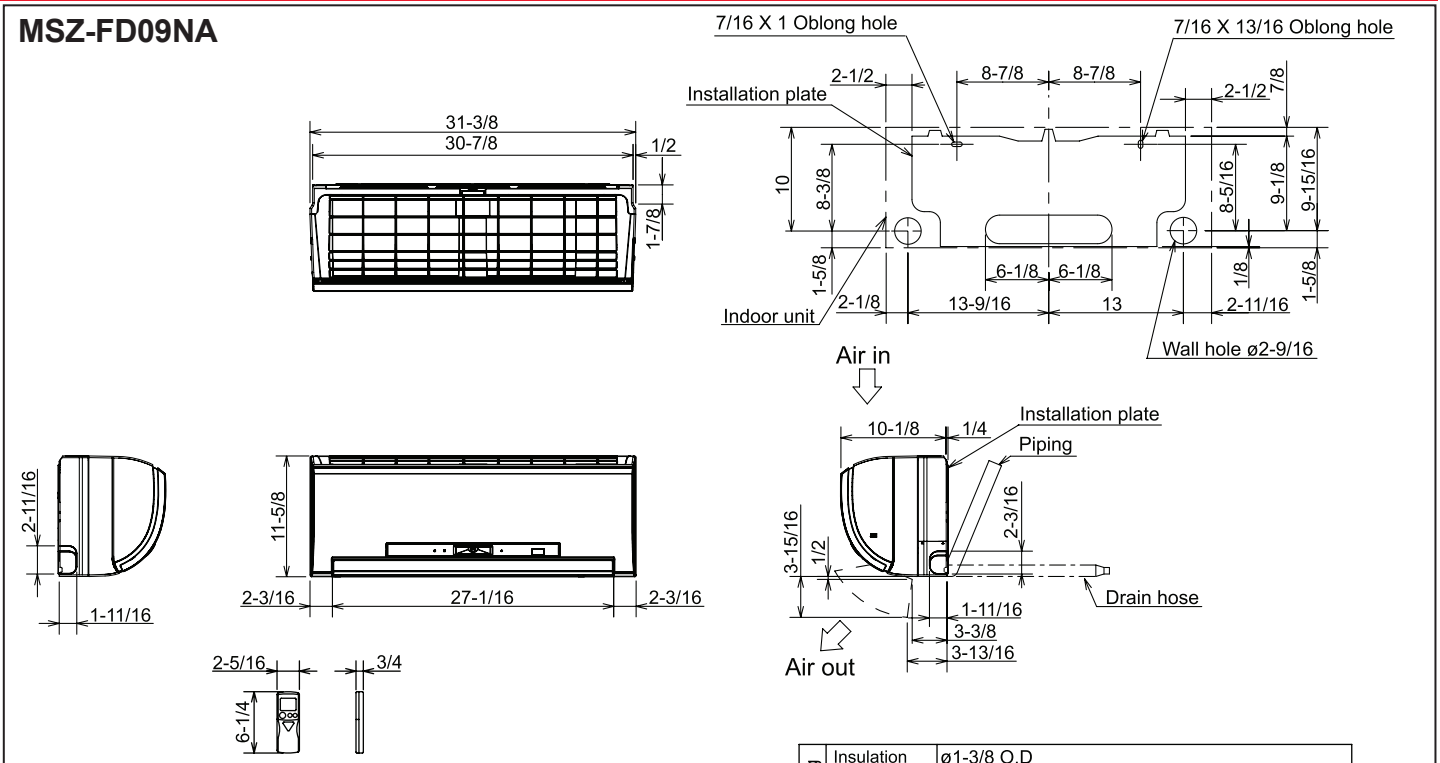

Piping	Insulation	ø1-3/8 O.D
	Liquid line	ø1/4 19-11/16 (Flared connection ø1/4)
	Gas line	ø3/8 16-15/16 (Flared connection ø3/8)
Drain hose		Insulation ø1-1/8 O.D Connected part ø5/8 O.D

Unit : inch

MUZ-FD09NA

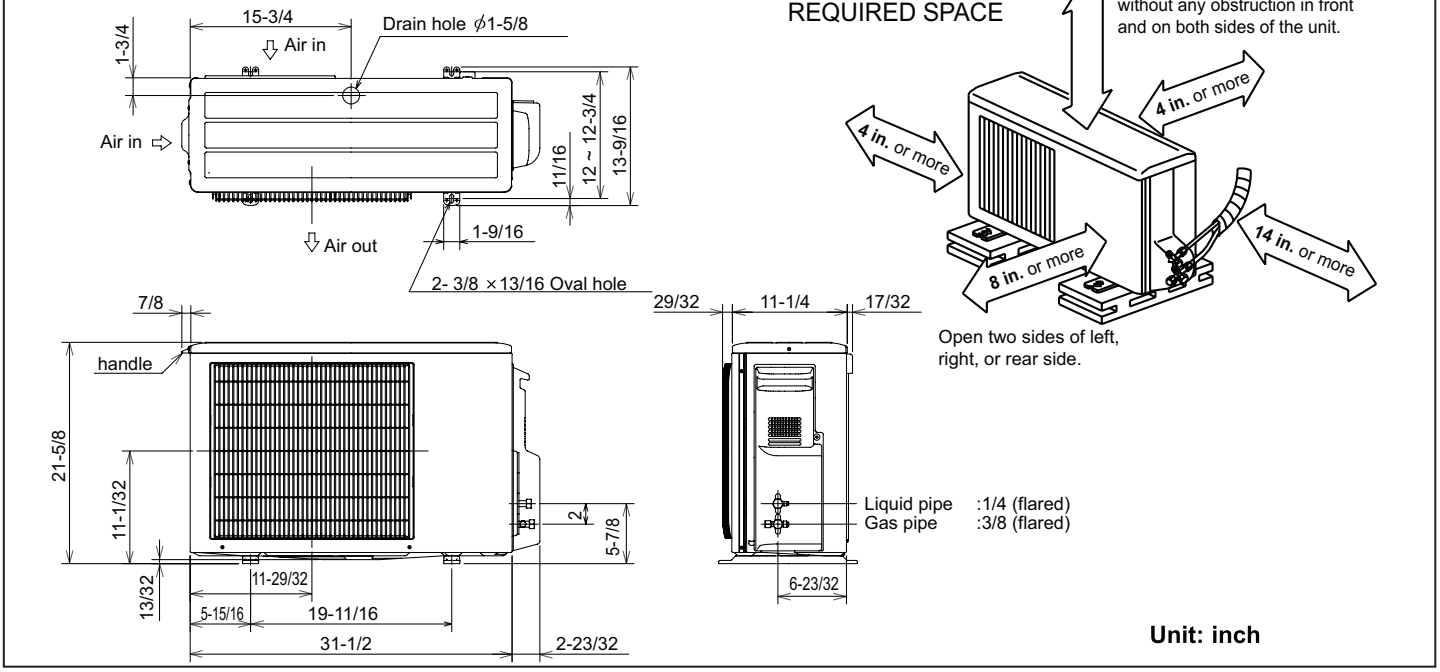

Unit: inch

ARI PERFORMANCE CERTIFIED ™
ARI Standard 210/240 Unitary Small HP
Certification applies only when the complete system is listed with ARI.
www.aridirectory.org

ETL LISTED ®

ENERGY STAR PARTNER

MITSUBISHI ELECTRIC

HVAC Advanced Products Division
3400 Lawrenceville Suwanee Rd
Suwanee, GA 30024
Tele: 678-376-2900 • Fax: 800-889-9904
Toll Free: 800-433-4822 (#3)
www.mehvac.com

Specifications are subject to change without notice.

 © MITSUBISHI ELECTRIC / HVAC 2009