MSZ-FS09NA-U1
9,000 BTU/H DELUXE WALL-MOUNTED INDOOR UNIT

Job Name:

System Reference: Date:

GENERAL FEATURES

- Slim wall-mounted indoor units provide zone comfort control
- Dual Barrier Coating applied to the heat exchanger, vanes and fan to prevent hydrophilic and hydrophobic dirt build-up
- Multiple fan speed options: Quiet, Low, Medium, High, Super-high, Auto
- 3D i-see Sensor® enables advance features:
  - Indirect or Direct Airflow for personalized comfort
  - Absence Detection for energy-saving mode
- Double Vane features:
  - Separates airflow to deliver air across a large area
  - Simultaneously deliver to air separate sections of a room
  - Generates more comfortable natural airflow pattern
- Multiple control options available:
  - Back-lit screen handheld remote controller (provided with unit)
  - kumo cloud® smart device app for remote access
  - Third-party interface options
  - Wired or wireless controllers
- Triple-action Filtration: Nano Platinum Filter, Deodorizing Filter, & Electrostatic Anti-Allergy Enzyme Filter
- Hot-Start Technology: no cold air rush at equipment startup or when restarting after Defrost Cycle
- Quiet operation

Specifications			System
Unit Type			MSZ-FS09NA
Cooling Capacity[1, 3]		BTU/H	9,000
Heating Capacity[2, 3]		BTU/H	9,600
Electrical	Voltage, Phase, Frequency		208/230, 1, 60
	Guaranteed Voltage Range	V AC	187 - 253
	Voltage: Indoor - Outdoor, S1-S2	V AC	208/230
	Voltage: Indoor - Outdoor, S2-S3	V DC	24
	Short-circuit Current Rating [SCCR]	kA	5
Indoor Unit	MCA	A	1.0
	Fan Motor Full Load Amperage	A	0.65
	Airflow Rate at Cooling, Dry	CFM	137–167–221–304–381
	Airflow Rate at Cooling, Wet	CFM	117–143–190–261–328
	Airflow Rate at Heating, Dry	CFM	140–167–225–325–437
	Sound Pressure Level [Cooling]	dB[A]	20–23–29–36–40
	Sound Pressure Level [Heating]	dB[A]	20–24–29–39–42
	Drain Pipe Size	In. [mm]	5/8 [15.88]
	Coating on Heat Exchanger		Dual Barrier Coating
	External Finish Color		Munsell 1.0Y 9.2/0.2
	Unit Dimensions	W x D x H: In. [mm]	36-7/16 x 9-3/16 x 12 (+11/16) [925 x 234 x 305 (+17)]
	Package Dimensions	W x D x H: In. [mm]	39 x 12-1/4 x 15-1/2 [990 x 310 x 400]
	Unit Weight	Lbs. [kg]	29 [13.5]
	Package Weight	Lbs. [kg]	34 [15.4]
Refrigerant	Type		R410A
Piping	Gas Pipe Size O.D. [Flared]	In.[mm]	3/8 [6.35]
	Liquid Pipe Size O.D. [Flared]	In.[mm]	1/4 [6.35]

NOTES:
Conditions

[1]Cooling (Indoor // Outdoor) °F 80 DB, 67 WB // 95 DB, 75 WB
[2]Heating at 47°F (Indoor // Outdoor) °F 70 DB, 60 WB // 47 DB, 43 WB

[3]Capacity varies based on the number of indoor units operating and the model of the Multi-zone Outdoor Unit. For reference to connected capacity charts, please refer Multi-zone Outdoor Unit Operational Performance.

Specifications are subject to change without notice.

© 2023 Mitsubishi Electric Trane HVAC US LLC. All rights reserved.

INDOOR UNIT ACCESSORIES: MSZ-FS09NA-U1

Control Interface	CN24 Relay Kit	☐ CN24RELAY-KIT-CM3
	IT Extender	☐ PAC-WHS01IE-E
	kumo station® for kumo cloud®	☐ PAC-WHS01HC-E
	Procon BACnet® and Modbus® Interface	☐ PAC-UKPRC001-CN-1
	System Control Interface	☐ MAC-334IF-E
	Thermostat Interface	☐ PAC-US444CN-1
	Thermostat Interface	☐ PAC-US445CN-1
	USNAP Adapter	☐ PAC-WHS01UP-E
	Wireless Interface for kumo cloud®	☐ PAC-USWHS002-WF-2
Remote Sensor	Wired Remote Sensor	☐ M21EAA307
	Wireless temperature and humidity sensor for kumo cloud®	☐ PAC-USWHS003-TH-1
Wired Remote Controller	Deluxe Wired MA Remote Controller†	☐ PAR-40MAAU
	Simple Ductless Wired Remote Controller	☐ PAC-SDW01RC-1
	Simple MA Remote Controller†	☐ PAC-YT53CRAU-J
	Touch MA Controller†	☐ PAR-CT01MAU-SB
Wireless Remote Controller	kumo touch™ RedLINK™ Wireless Controller	☐ MHK2
	Lockdown bracket for remote controller	☐ RCMKP1CB
Condensate	Blue Diamond (Advanced) Mini Condensate Pump w/ Reservoir & Sensor (208/230V) [recommended]	☐ X87-721
	Blue Diamond (MicroBlue) Mini Condensate Pump (110/208/230V) up to 18,000 BTU/H	☐ X86-003
	Blue Diamond Alarm Extension Cable—6.5 Ft.	☐ C13-192
	Blue Diamond MultiTank — collection tank for use with multiple pumps	☐ C21-014
	Blue Diamond Sensor Extension Cable — 15 Ft.	☐ C13-103
	Drain Pan Level Sensor/Control	☐ SS610E
	Fascia Kit for MicroBlue Pump, mounts the MicroBlue and sensor directly beneath indoor unit	☐ T18-016
	Refco Condensate Pump (100-240 VAC)	☐ GOBI-II
	Refco Condensate Pump (100-240 VAC) up to 120,000 BTU/H	☐ COMBI
	Sauermann Condensate Pump	☐ SI30-230
Disconnect Switch	(30A/600V/UL) [fits 2” X 4” utility box] - Black	☐ TAZ-MS303
	(30A/600V/UL) [fits 2” X 4” utility box] - White	☐ TAZ-MS303W
Filter	Electro Static Anti-allergy Enzyme Filter	☐ MAC-2330FT-E
	Platinum Deodorizing Filter	☐ MAC-3000FT-E
Lineset	15’ x 1/4” x 15’ / 3/8” Lineset (Twin-Tube Insulation)	☐ MLS143812T-15
	30’ x 1/4” x 30’ / 3/8” Lineset (Twin-Tube Insulation)	☐ MLS143812T-30
	50’ x 1/4” x 50’ / 3/8” Lineset (Twin-Tube Insulation)	☐ MLS143812T-50
	65’ x 1/4” x 65’ / 3/8” Lineset (Twin-Tube Insulation)	☐ MLS143812T-65

NOTES:
†Requires MAC-334IF-E
- M-Series EZ FIT® Recessed Ceiling Cassette, Floor-mount and Wall-mount
  Allows indoor units to connect to an MA Controller:
  Deluxe MA Remote Controller
  Simple MA Controller
  Touch MA Controller

© 2023 Mitsubishi Electric Trane HVAC US LLC. All rights reserved.

INDOOR UNIT DIMENSIONS: MSZ-FS09NA-U1

Unit: inch

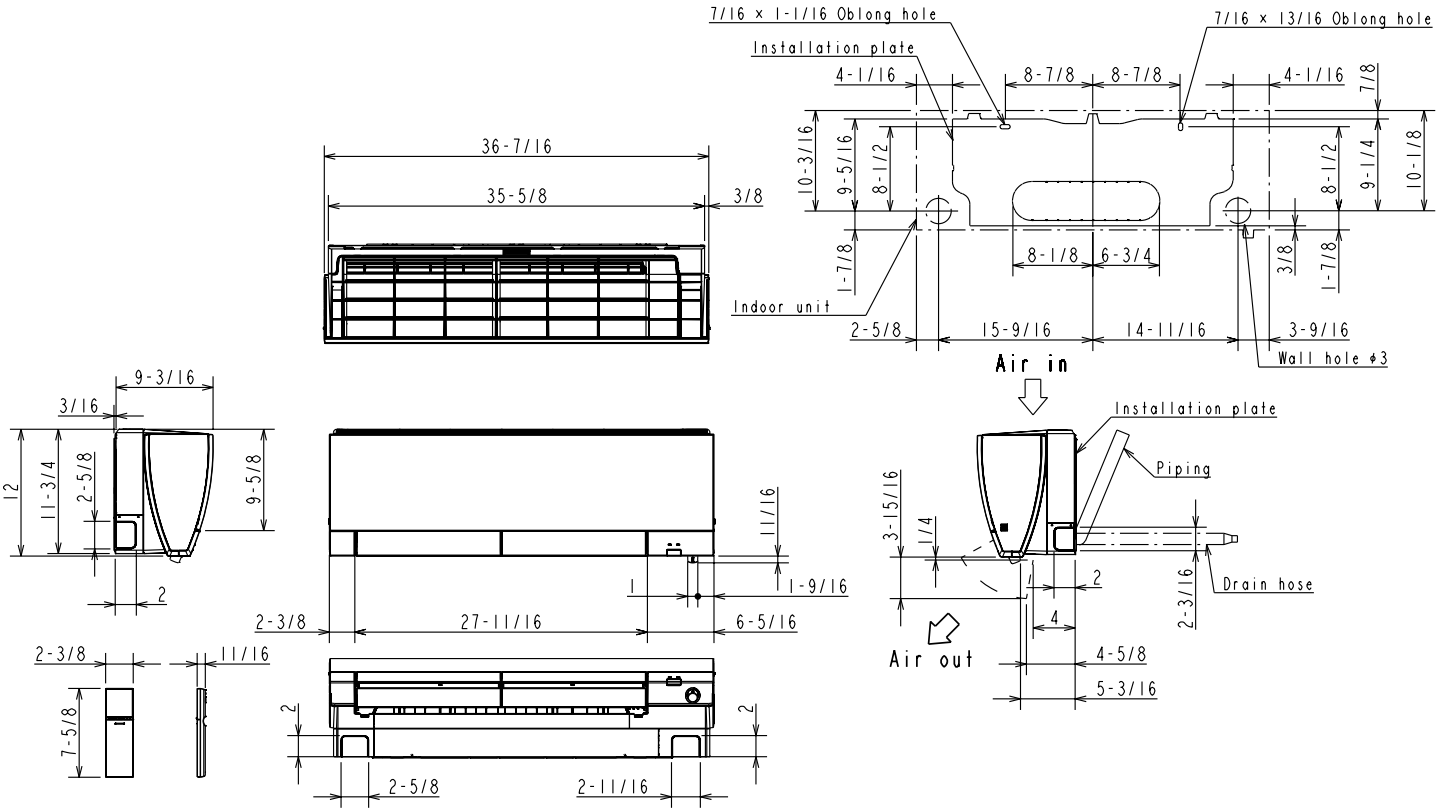

(06/09/12 KBTU/H)

Piping	Insulation	ϕ1-7/16 O.D
	Liquid line	ϕ1/4 19-11/16 (Flared connection ϕ1/4)
	Gas line	ϕ3/8 16-15/16 (Flared connection ϕ3/8)
Drain hose		Insulation ϕ1-1/8 Connected part ϕ5/8 O.D

(15/18 KBTU/H)

Piping	Insulation	ϕ1-7/16 O.D
	Liquid line	ϕ1/4 19-11/16 (Flared connection ϕ1/4)
	Gas line	ϕ3/8 16-15/16 (Flared connection ϕ1/2)
Drain hose		Insulation ϕ1-1/8 Connected part ϕ5/8 O.D

1340 Satellite Boulevard Suwanee, GA 30024
Toll Free: 800-433-4822 www.mehvac.com

FORM# MSZ-FS09NA-U1 - 202310

Specifications are subject to change without notice.

© 2023 Mitsubishi Electric Trane HVAC US LLC. All rights reserved.