MITSUBISHI ELECTRIC

SPLIT-TYPE AIR CONDITIONERS

Revision B:
• 3. SPECIFICATION has been corrected.

OBH945 REVISED EDITION-A is void.

INDOOR UNIT

No. OBH945
REVISED EDITION-B

SERVICE MANUAL

Models

MSZ-FX06NL - U1
MSZ-FX09NL - U1
MSZ-FX12NL - U1
MSZ-FX15NL - U1
MSZ-FX18NL - U1
MSZ-FX24NL - U1

Outdoor unit service manual
MUZ-FX•NLHZ Series (OBH946)
MXZ-D•NL/NLHZ Series (OBH949)

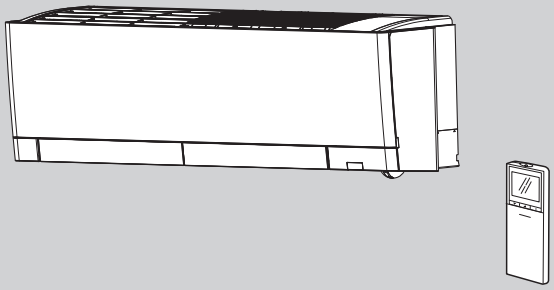

CONTENTS

• SERVICING PRECAUTIONS FOR UNITS USING REFRIGERANT R454B ····· 3
1. TECHNICAL CHANGES ····· 8
2. PART NAMES AND FUNCTIONS ····· 9
3. SPECIFICATION ····· 10
4. OUTLINES AND DIMENSIONS ····· 12
5. WIRING DIAGRAM ····· 13
6. REFRIGERANT SYSTEM DIAGRAM ····· 14
7. SERVICE FUNCTIONS ····· 15
8. MICROPROCESSOR CONTROL ····· 20
9. TROUBLESHOOTING ····· 29
10. DISASSEMBLY INSTRUCTIONS ····· 44
PARTS CATALOG (OBB945)

Use the specified refrigerant only

Never use any refrigerant other than that specified.

Doing so may cause a burst, an explosion, or fire when the unit is being used, serviced, or disposed of.
Correct refrigerant is specified in the manuals and on the spec labels provided with our products.
We will not be held responsible for mechanical failure, system malfunction, unit breakdown or accidents caused by failure to follow the instructions.

<Preparation before the repair service>

- Prepare the proper tools.
- Prepare the proper protectors.
- Provide adequate ventilation.
- After stopping the operation of the air conditioner, turn off the power-supply breaker and pull the power plug.
- Discharge the capacitor before the work involving the electric parts.

<Precautions during the repair service>

- Do not perform the work involving the electric parts with wet hands.
- Do not pour water into the electric parts.
- Do not touch the refrigerant.
- Do not touch the hot or cold areas in the refrigeration cycle.
- When the repair or the inspection of the circuit needs to be done without turning off the power, exercise great caution not to touch the live parts.

⚠ WARNING

- **When the refrigerant circuit has a leak, do not execute pump down with the compressor.**
- **When pumping down the refrigerant, stop the compressor before disconnecting the refrigerant pipes. The compressor may burst if air etc. get into it.**
- **When opening or closing the valve below freezing temperatures, refrigerant may spurt out from the gap between the valve stem and the valve body, resulting in injuries.**

Revision A:

• 4. OUTLINES AND DIMENSIONS has been corrected.

Revision B:

• 3. SPECIFICATION has been corrected.

SERVICING PRECAUTIONS FOR UNITS USING REFRIGERANT R454B

Servicing precautions for units using refrigerant R454B

Refrigerant Safety Group A2L **WARNING**

This unit uses a flammable refrigerant.
If refrigerant leaks and comes in contact with fire or heating part, it will create harmful gas and there is risk of fire.

Do not use means to accelerate the defrosting process or to clean, other than those recommended by the manufacturer.
The appliance should not be stored in a room with continuously operating ignition sources (for example: open flames, an operating gas appliance, or an operating electric heater).
Do not pierce or burn.
Be aware that refrigerants may not contain an odor.
- Maintenance, service and repair operations shall be performed by authorized technician with required qualification.
- Servicing shall be performed only by methods recommended by the manufacturer.
- Refrigerant piping shall be protected from physical damage.
- Field installed piping should be kept to a minimum.
- Compliance with national gas regulations shall be observed.
- All field joints shall be accessible for inspection prior to being covered or enclosed.

WARNING

- The mounting height of indoor unit shall be 5.9 ft (1.8 m) or more from the floor. Up to 7.5 ft (2.3 m) is recommended.
- The unit shall be installed in rooms exceed the minimum room area (A_{min}) determined by total refrigerant amount (M).

NOTE: For the corresponding table of the branch box system, refer to the multi-unit installation manual.

SYSTEM WITHOUT BRANCH BOX

M			A_{min}	
[kg]	[lbs, oz]		[m²]	[ft²]
0.5	1	1	1.9	21
0.6	1	5	2.3	25
0.7	1	8	2.6	28
0.8	1	12	3.0	33
0.9	1	15	3.4	37
1.0	2	3	3.8	41
1.1	2	6	4.1	45
1.2	2	10	4.5	49
1.3	2	13	4.9	53
1.4	3	1	5.2	56
1.5	3	4	5.6	61
1.6	3	8	6.0	65

M			A_{min}	
[kg]	[lbs, oz]		[m²]	[ft²]
1.7	3	11	6.3	68
1.8	3	15	6.8	74
1.9	4	3	7.2	78
2.0	4	6	7.6	82
2.1	4	10	7.9	86
2.2	4	13	8.3	90
2.3	5	1	8.7	94
2.4	5	4	9.1	98
2.5	5	8	9.4	102
2.6	5	11	9.8	106
2.7	5	15	10.2	110
2.8	6	2	10.6	115

1. REFRIGERANT PIPE NITROGEN PRESSURE TEST METHOD

(1) Connect the testing tools.
- Make sure the stop valves are closed and do not open them.
- Add pressure to the refrigerant lines through the service port of the stop valve for GAS.

(2) Do not add pressure to the specified pressure all at once; add pressure little by little.
1. Pressurize to 0.5 MPa (73 psig, 5 kgf/cm²G), wait 5 minutes, and make sure the pressure does not decrease.
2. Pressurize to 1.5 MPa (218 psig, 15 kgf/cm²G), wait 5 minutes, and make sure the pressure does not decrease.
3. Pressurize to 4.15 MPa (601 psig, 41.5 kgf/cm²G) and measure the surrounding temperature and refrigerant pressure.

(3) If the specified pressure holds for 24 Hours and does not decrease, the pipes have passed the test and there are no leaks.
- If the surrounding temperature changes by 1°F (0.5°C), the pressure will change by about 1 psig (0.007 MPa). Make the necessary corrections.

(4) If the pressure decreases in steps (2) or (3), there is a gas leak. Look for the source of the gas leak.

2. Additional refrigerant charge

Additional refrigerant charge

Refrigerant for the indoor units and the extended piping is not included in the outdoor unit when the unit is shipped from the factory. Therefore, charge each refrigerant piping system with additional refrigerant at the installation site. In addition, in order to carry out service, enter the size and length of each liquid pipe and additional refrigerant charge amounts in the spaces provided on the “Refrigerant amount” plate on the outdoor unit.

NOTE:

- When the unit is stopped, charge the unit with the additional refrigerant through the liquid stop valve after the pipe extensions and indoor units have been vacuumized.
- When the unit is operating, add refrigerant to the gas check valve using a safety charger. Do not add liquid refrigerant directly to the check valve.

Refrigerant adjustment *1

Model	**MSZ-FX06/09/12NL**	**MSZ-FX15/18/24NL**
Chargeless pipe length A	25 ft (7.5 m)	50 ft (15 m)
Refrigerant adjustment B	0.22 oz/ft (20 g/m)	
Additional refrigerant	Pipe length up to A : No need Pipe length exceeds A : B×(pipe length - A)	

*1 When installing multi units, refer to the installation manual of the multi outdoor unit for unit installation.

3. REFRIGERANT SENSOR INSTALLATION AND REPLACEMENT

- For system with branch box, the refrigerant sensor shall be installed to the indoor unit before turning on the breaker. The refrigerant sensor is located inside the branch box package or can be ordered separately Parts Number MAC-100RS-E.
- When the refrigerant sensor is installed in the indoor unit, the system may stop operation if refrigerant leaks are detected.
- If the refrigerant sensor fails, replace the refrigerant sensor.
- The refrigerant sensor shall only be replaced with manufacturer approved sensor.
- If the refrigerant sensor error occurs even if the sensor is installed, check the cable connection for the sensor side and the main board side.

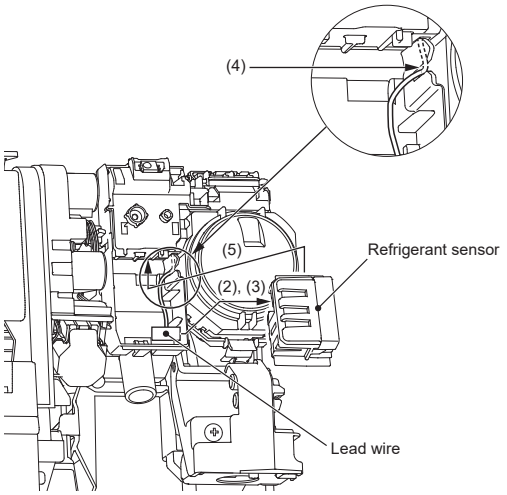

Fig. 1

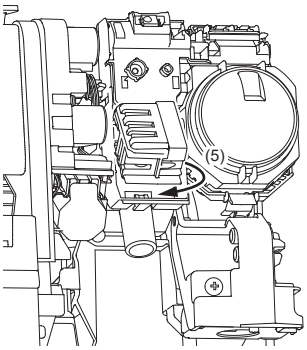

Fig. 2

(1) Remove the panel right assembly.
Refer to “How to install the refrigerant sensor” of 4. in 10. DISASSEMBLY INSTRUCTIONS.
(2) Take out the lead wire. (Fig. 1)
(3) Connect the lead wire to the refrigerant sensor. (Fig. 1)
(4) Push the lead wire into the slit so that the refrigerant sensor does not press it.
(5) Install the refrigerant sensor as shown in the figure. (Fig. 2)

4. Cautions for the unit using R454B refrigerant

Basic work procedures are the same as those for conventional units using refrigerant R410A. However, pay careful attention to the following points.

■ Information on servicing

1. Checks to the area
Prior to beginning work on systems containing FLAMMABLE REFRIGERANTS, safety checks are necessary to ensure that the risk of ignition is minimized. For repair to the REFRIGERATING SYSTEM, 2 to 6 below shall be completed prior to conducting work on the system.

2. Work procedure
Work shall be undertaken under a controlled procedure so as to minimize the risk of a flammable gas or vapour being present while the work is being performed.

3. General work area
All maintenance staff and others working in the local area shall be instructed on the nature of work being carried out.
Work in confined spaces shall be avoided.

4. Checking for presence of refrigerant
The area shall be checked with an appropriate refrigerant detector prior to and during work, to ensure the technician is aware of potentially toxic or flammable atmospheres. Ensure that the leak detection equipment being used is suitable for use with all applicable refrigerants, i.e. non-sparking, adequately sealed or intrinsically safe.

5. Presence of fire extinguisher
If any hot work is to be conducted on the refrigerating equipment or any associated parts, appropriate fire extinguishing equipment shall be available to hand. Have a dry powder or CO2 fire extinguisher adjacent to the charging area.

6. No ignition sources
No person carrying out work in relation to a REFRIGERATING SYSTEM which involves exposing any pipe work shall use any sources of ignition in such a manner that it may lead to the risk of fire or explosion. All possible ignition sources, including cigarette smoking, should be kept sufficiently far away from the site of installation, repairing, removing and disposal, during which refrigerant can possibly be released to the surrounding space. Prior to work taking place, the area around the equipment is to be surveyed to make sure that there are no flammable hazards or ignition risks. “No Smoking” signs shall be displayed.

7. Ventilated area
Ensure that the area is in the open or that it is adequately ventilated before breaking into the system or conducting any hot work. A degree of ventilation shall continue during the period that the work is carried out. The ventilation should safely disperse any released refrigerant and preferably expel it externally into the atmosphere.

8. Checks to the refrigerating equipment
Where electrical components are being changed, they shall be fit for the purpose and to the correct specification. At all times the manufacturer’s maintenance and service guidelines shall be followed. If in doubt, consult the manufacturer’s technical department for assistance. The following checks shall be applied to installations using FLAMMABLE REFRIGERANTS:
- the actual REFRIGERANT CHARGE is in accordance with the room size within which the refrigerant containing parts are installed;
- the ventilation machinery and outlets are operating adequately and are not obstructed;
- marking to the equipment continues to be visible and legible. Markings and signs that are illegible shall be corrected;
- refrigerating pipe or components are installed in a position where they are unlikely to be exposed to any substance which may corrode refrigerant containing components, unless the components are constructed of materials which are inherently resistant to being corroded or are suitably protected against being so corroded.

9. Checks to electrical devices
Repair and maintenance to electrical components shall include initial safety checks and component inspection procedures. If a fault exists that could compromise safety, then no electrical supply shall be connected to the circuit until it is satisfactorily dealt with. If the fault cannot be corrected immediately but it is necessary to continue operation, an adequate temporary solution shall be used. This shall be reported to the owner of the equipment so all parties are advised.
Initial safety checks shall include:
- that capacitors are discharged: this shall be done in a safe manner to avoid possibility of sparking;
- that no live electrical components and wiring are exposed while charging, recovering or purging the system;
- that there is continuity of earth bonding.

■ **Repairs to sealed components**
Sealed electrical components shall be replaced.

■ **Repair to intrinsically safe components**
Intrinsically safe components must be replaced.

■ **Cabling**
Check that cabling will not be subject to wear, corrosion, excessive pressure, vibration, sharp edges or any other adverse environmental effects. The check shall also take into account the effects of aging or continual vibration from sources such as compressors or fans.

■ **Detection of flammable refrigerants**
Under no circumstances shall potential sources of ignition be used in the searching for or detection of refrigerant leaks. A halide torch (or any other detector using a naked flame) shall not be used.
The following leak detection methods are deemed acceptable for all refrigerant systems.
Electronic leak detectors may be used to detect refrigerant leaks but, in the case of FLAMMABLE REFRIGERANTS, the sensitivity may not be adequate, or may need re-calibration. (Detection equipment shall be calibrated in a refrigerant-free area.)
Ensure that the detector is not a potential source of ignition and is suitable for the refrigerant used.
Leak detection equipment shall be set at a percentage of the LFL of the refrigerant and shall be calibrated to the refrigerant employed, and the appropriate percentage of gas (25 % maximum) is confirmed.
Leak detection fluids are also suitable for use with most refrigerants but the use of detergents containing chlorine shall be avoided as the chlorine may react with the refrigerant and corrode the copper pipe-work.
If a leak is suspected, all naked flames shall be removed/extinguished.
If a leakage of refrigerant is found which requires brazing, all of the refrigerant shall be recovered from the system, or isolated (by means of shut off valves) in a part of the system remote from the leak.

■ **Removal and evacuation**
When breaking into the refrigerant circuit to make repairs - or for any other purpose -conventional procedures shall be used.
However, for flammable refrigerants it is important that best practice be followed, since flammability is a consideration.
The following procedure shall be adhered to:
• safely remove refrigerant following local and national regulations;
• evacuate;
• purge the circuit with inert gas;
• evacuate;
• continuously flush or purge with inert gas when using flame to open circuit; and
• open the circuit.
The refrigerant charge shall be recovered into the correct recovery cylinders if venting is not allowed by local and national codes.
For appliances containing flammable refrigerants, the system shall be purged with oxygen-free nitrogen to render the appliance safe for flammable refrigerants. This process might need to be repeated several times.
Compressed air or oxygen shall not be used for purging refrigerant systems.
For appliances containing flammable refrigerants, refrigerants purging shall be achieved by breaking the vacuum in the system with oxygen-free nitrogen and continuing to fill until the working pressure is achieved, then venting to atmosphere, and finally pulling down to a vacuum.
This process shall be repeated until no refrigerant is within the system. When the final oxygen-free nitrogen charge is used, the system shall be vented down to atmospheric pressure to enable work to take place.
The outlet for the vacuum pump shall not be close to any potential ignition sources, and ventilation shall be available.

■ **Charging procedures**
In addition to conventional charging procedures, the following requirements shall be followed.
• Ensure that contamination of different refrigerants does not occur when using charging equipment. Hoses or lines shall be as short as possible to minimize the amount of refrigerant contained in them.
• Cylinders shall be kept in an appropriate position according to the instructions.
• Ensure that the REFRIGERATING SYSTEM is earthed prior to charging the system with refrigerant.
• Label the system when charging is complete (if not already).
• Extreme care shall be taken not to overfill the REFRIGERATING SYSTEM.
Prior to recharging the system, it shall be pressure-tested with the appropriate purging gas. The system shall be leak-tested on completion of charging but prior to commissioning. A follow up leak test shall be carried out prior to leaving the site.

■ Decommissioning

Before carrying out this procedure, it is essential that the technician is completely familiar with the equipment and all its detail. It is recommended good practice that all refrigerants are recovered safely. Prior to the task being carried out, an oil and refrigerant sample shall be taken in case analysis is required prior to re-use of recovered refrigerant. It is essential that electrical power is available before the task is commenced.

- Become familiar with the equipment and its operation.
- Isolate system electrically.
- Before attempting the procedure, ensure that:
  - mechanical handling equipment is available, if required, for handling refrigerant cylinders;
  - all personal protective equipment is available and being used correctly;
  - the recovery process is supervised at all times by a competent person;
  - recovery equipment and cylinders conform to the appropriate standards.
- Pump down refrigerant system, if possible.
- If a vacuum is not possible, make a manifold so that refrigerant can be removed from various parts of the system.
- Make sure that cylinder is situated on the scales before recovery takes place.
- Start the recovery machine and operate in accordance with instructions.
- Do not overfill cylinders (no more than 80 % volume liquid charge).
- Do not exceed the maximum working pressure of the cylinder, even temporarily.
- When the cylinders have been filled correctly and the process completed, make sure that the cylinders and the equipment are removed from site promptly and all isolation valves on the equipment are closed off.
- Recovered refrigerant shall not be charged into another REFRIGERATING SYSTEM unless it has been cleaned and checked.

■ Labelling

Equipment shall be labelled stating that it has been de-commissioned and emptied of refrigerant. The label shall be dated and signed. For appliances containing FLAMMABLE REFRIGERANTS, ensure that there are labels on the equipment stating the equipment contains FLAMMABLE REFRIGERANT.

■ Recovery

When removing refrigerant from a system, either for servicing or decommissioning, it is recommended good practice that all refrigerants are removed safely.

When transferring refrigerant into cylinders, ensure that only appropriate refrigerant recovery cylinders are employed. Ensure that the correct number of cylinders for holding the total system charge is available.

All cylinders to be used are designated for the recovered refrigerant and labelled for that refrigerant (i.e., special cylinders for the recovery of refrigerant). Cylinders shall be complete with pressure-relief valve and associated shut-off valves in good working order.

Empty recovery cylinders are evacuated and, if possible, cooled before recovery occurs.

The recovery equipment shall be in good working order with a set of instructions concerning the equipment that is at hand and shall be suitable for the recovery of the flammable refrigerant.

If in doubt, the manufacturer should be consulted. In addition, a set of calibrated weighing scales shall be available and in good working order. Hoses shall be complete with leak-free disconnect couplings and in good condition.

The recovered refrigerant shall be processed according to local legislation in the correct recovery cylinder, and the relevant waste transfer note arranged. Do not mix refrigerants in recovery units and especially not in cylinders.

If compressors or compressor oils are to be removed, ensure that they have been evacuated to an acceptable level to make certain that FLAMMABLE REFRIGERANT does not remain within the lubricant.

The compressor body shall not be heated by an open flame or other ignition sources to accelerate this process. When oil is drained from a system, it shall be carried out safely.

1 TECHNICAL CHANGES

MSZ-FX06NL - U1
MSZ-FX09NL - U1
MSZ-FX12NL - U1
MSZ-FX15NL - U1
MSZ-FX18NL - U1
MSZ-FX24NL - U1

1. New model

2 PART NAMES AND FUNCTIONS

MSZ-FX06NL MSZ-FX09NL MSZ-FX12NL
MSZ-FX15NL MSZ-FX18NL MSZ-FX24NL

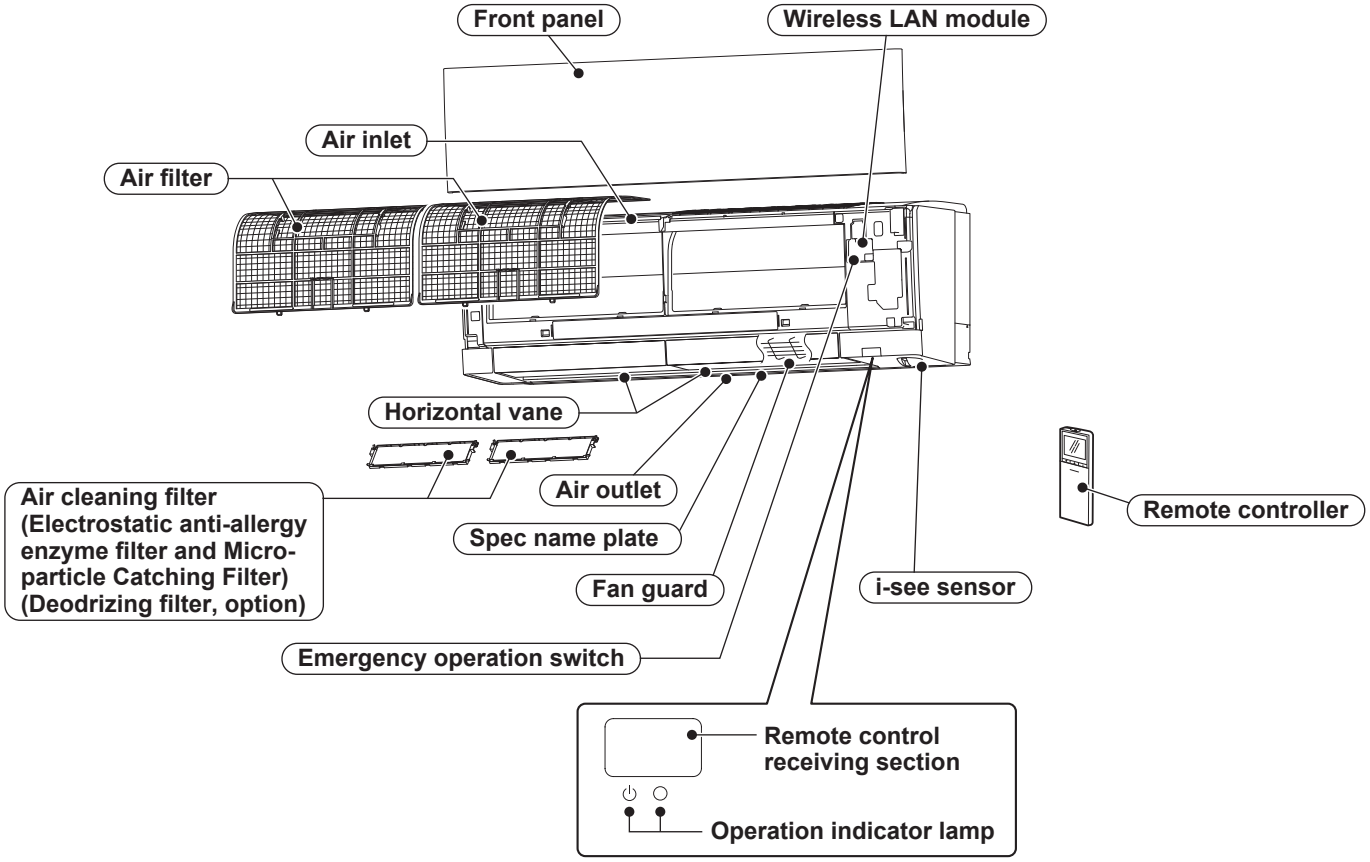

ACCESSORIES

(1)	Installation plate	1
(2)	Installation plate fixing screw 4 × 25 mm	5
(3)	Wireless remote controller	1
(4)	Felt tape (For left or left-rear piping)	1
(5)	Battery (AAA) for (3)	2
(6)	Remote controller holder	1
(7)	Screws for the remote controller holder (6) 3.5 × 16 mm (Black)	2
(8)	Air cleaning filter	2

3 SPECIFICATION

Indoor model			MSZ-FX06NL	MSZ-FX09NL	MSZ-FX12NL
Power supply	V, phase, Hz		208/230, 1, 60		
Disconnect switch		A	15		
Min. circuit ampacity		A	1.0		
Fan motor		F.L.A	0.76		
Airflow Super High - High - Med. - Low - Quiet	COOL Dry (Wet)	CFM	420-371-293-233-177 (357-315-249-198-150)	526-406-311-233-198 (447-345-264-198-168)	526-406-311-247-198 (447-345-264-210-168)
	HEAT Dry	CFM	477-406-311-247-177		
Moisture removal		pt./h	0.0		1.3
Sound level Super High - High - Med. - Low - Quiet	Cooling	dB(A)	40-36-29-23-20	44-36-29-23-20	44-36-29-24-20
	Heating	dB(A)	42-36-29-24-20		42-36-29-24-21
Fan speed Super High - High - Med. - Low - Quiet	Cooling	rpm	820-750-630-540-450	970-800-660-540-480	970-800-660-560-480
	Heating	rpm	900-800-660-560-450		
Cond. drain connection O.D.		in.	5/8		
Dimensions	W	in.	39 - 9/32		
	D		9 - 3/4		
	H		12		
Weight		lb.	31.4		
External finish			Munsell 1.0Y 9.2/0.2		
Remote controller			Wireless type		
Control voltage (by built-in transformer)			12 - 24 V DC		

Indoor model			MSZ-FX15NL	MSZ-FX18NL	MSZ-FX24NL
Power supply	V, phase, Hz		208/230, 1, 60		
Disconnect switch		A	15		
Min. circuit ampacity		A	1.0		
Fan motor		F.L.A	0.76		
Airflow Super High - High - Med. - Low - Quiet	COOL Dry (Wet)	CFM	593-456-392-339-272 (504-387-333-288-231)		720-586-484-378-272 (612-498-411-321-231)
	HEAT Dry	CFM	614-456-378-311-272		749-586-470-353-272
Moisture removal		pt./h	2.5	3.8	4.0
Sound level Super High - High - Med. - Low - Quiet	Cooling	dB(A)	45-39-35-31-27		53-47-41-34-27
	Heating	dB(A)	47-39-34-29-26		55-47-40-32-26
Fan speed Super High - High - Med. - Low - Quiet	Cooling	rpm	1,060-870-780-700-600		1,230-1,050-910-760-600
	Heating	rpm	1,090-870-760-660-600		1,270-1,050-890-720-600
Cond. drain connection O.D.		in.	5/8		
Dimensions	W	in.	39 - 9/32		
	D		9 - 3/4		
	H		12		
Weight		lb.	31.4		31.6
External finish			Munsell 1.0Y 9.2/0.2		
Remote controller			Wireless type		
Control voltage (by built-in transformer)			12 - 24 V DC		

NOTE: Test conditions are based on AHRI 210/240.

3-1. OPERATING RANGE

(1) POWER SUPPLY

	Rated voltage	Guaranteed voltage (V)
Indoor unit	208/230 V 1 phase 60 Hz	Min. 187 208 230 Max. 253

(2) OPERATION

Mode	Condition	Intake air temperature (°F)	
		DB	WB
Cooling	Standard temperature	80	67
	Maximum temperature	90	73
	Minimum temperature	67	57
	Maximum humidity	78%	
Heating	Standard temperature	70	60
	Maximum temperature	80	67
	Minimum temperature	70	60

3-2. OUTLET AIR SPEED AND COVERAGE RANGE

Model	Mode	Function	Airflow (CFM)	Air speed (ft./sec.)	Coverage range (ft.)
MSZ-FX06NL	HEAT	Dry	477	20.5	31.8
	COOL	Dry	420	18.1	28.2
		Wet	357	15.4	24.1
MSZ-FX09NL	HEAT	Dry	477	20.5	31.8
	COOL	Dry	526	22.7	35.0
		Wet	447	19.3	29.9
MSZ-FX12NL	HEAT	Dry	477	20.5	31.8
	COOL	Dry	526	22.7	35.0
		Wet	447	19.3	29.9
MSZ-FX15NL	HEAT	Dry	614	26.5	40.7
	COOL	Dry	593	25.5	39.3
		Wet	504	21.7	33.6
MSZ-FX18NL	HEAT	Dry	614	26.5	40.7
	COOL	Dry	593	25.5	39.3
		Wet	504	21.7	33.6
MSZ-FX24NL	HEAT	Dry	749	32.2	49.3
	COOL	Dry	720	31.0	47.5
		Wet	612	26.4	40.6

- The air coverage range is the figure up to the position where the air speed is 1 ft./sec., when air is blown out horizontally from the unit properly at the High speed position.
  The coverage range should be used only as a general guideline since it varies according to the size of the room and furniture arranged inside the room.

4 OUTLINES AND DIMENSIONS

MSZ-FX06NL MSZ-FX09NL MSZ-FX12NL
MSZ-FX15NL MSZ-FX18NL MSZ-FX24NL

Unit: inch

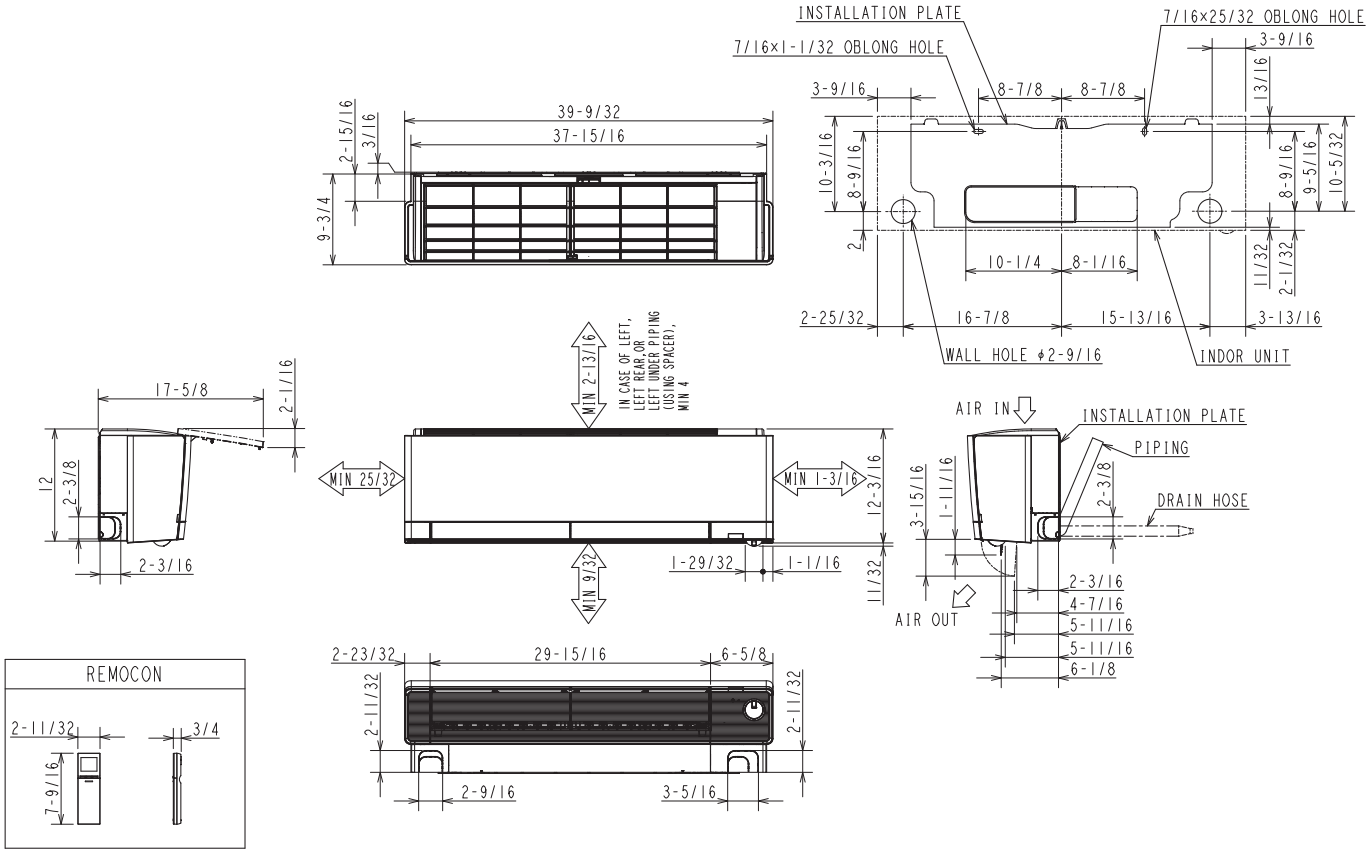

MSZ-FX06/09/12NL

PIPING	INSULATION	ø1-9/16 O.D
	LIQUID LINE	ø1/4 - 19-11/16 (FLARED CONNECTION ø1/4)
	GAS LINE	ø3/8 - 17-3/4 (FLARED CONNECTION ø3/8)
DRAIN HOSE		INSULATION ø1-5/32 CONNECTED PART ø5/8 O.D

MSZ-FX15/18NL

PIPING	INSULATION	ø1-9/16 O.D
	LIQUID LINE	ø1/4 - 19-11/16 (FLARED CONNECTION ø1/4)
	GAS LINE	ø3/8 - 17-3/4 (FLARED CONNECTION ø1/2)
DRAIN HOSE		INSULATION ø1-5/32 CONNECTED PART ø5/8 O.D

MSZ-FX24NL

PIPING	INSULATION	ø1-9/16 O.D
	LIQUID LINE	ø1/4 - 19-11/16 (FLARED CONNECTION ø1/4)
	GAS LINE	ø15/32 -17-3/4* (FLARED CONNECTION ø5/8)
DRAIN HOSE		INSULATION ø1-5/32 CONNECTED PART ø5/8 O.D

*The diameter of the gas line piping is ø3/8 in one spot.

5 WIRING DIAGRAM

MSZ-FX06NL MSZ-FX09NL MSZ-FX12NL MSZ-FX15NL MSZ-FX18NL

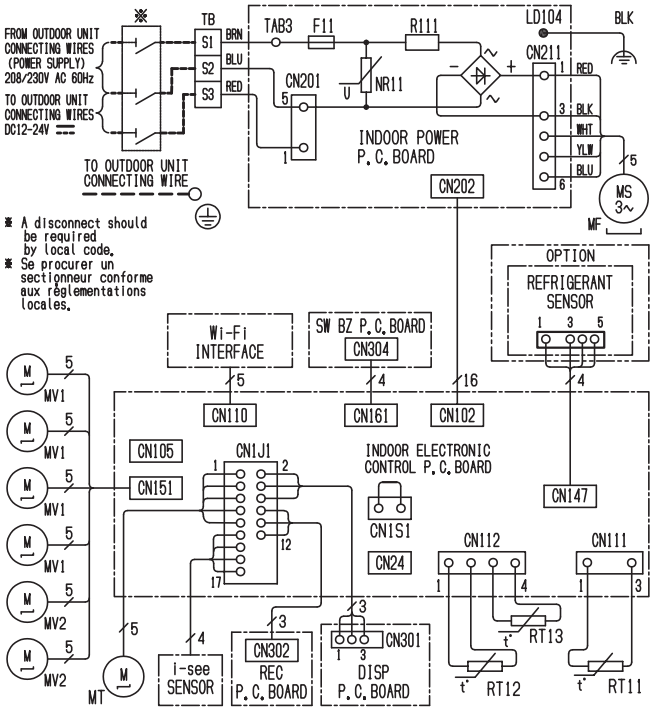

SYMBOL	NAME
F11	FUSE (T3.15AL250V)
MF	FAN MOTOR
MV1	VANE MOTOR (HORIZONTAL)
MV2	VANE MOTOR (VERTICAL)
MT	i-see SENSOR MOTOR
NR11	VARISTOR
R111	RESISTOR
RT11	ROOM TEMP. THERMISTOR
RT12	COIL TEMP. THERMISTOR (MAIN)
RT13	COIL TEMP. THERMISTOR (SUB)
TB	TERMINAL BLOCK

NOTES:
1. About the outdoor side electronic wiring refer to the outdoor unit electronic wiring diagram for servicing.
2. Use copper supply wires.
3. Symbols indicate. ▭▭▭▭ : Terminal block ▭▭▭▭ : Connector

REMARQUES:
1. Pour le câblage électronique côté extérieur, se reporter au schéma d'entretien du câblage électronique de l'appareil extérieur.
2. Utiliser des fils d'alimentation en cuivre.
3. Les symboles ont les significations suivantes.
▭▭▭▭ : Borne ▭▭▭▭ : Connecteur

MSZ-FX24NL

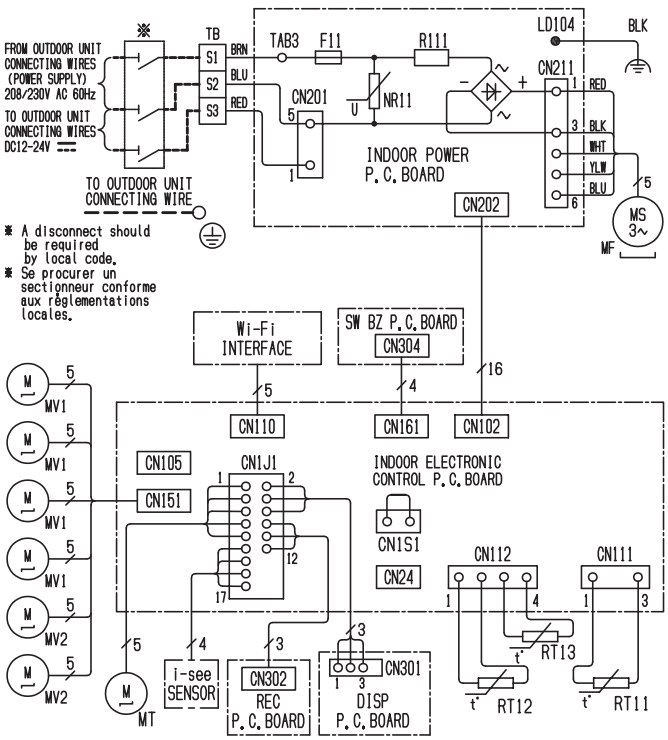

SYMBOL	NAME
F11	FUSE (T3.15AL250V)
MF	FAN MOTOR
MV1	VANE MOTOR (HORIZONTAL)
MV2	VANE MOTOR (VERTICAL)
MT	i-see SENSOR MOTOR
NR11	VARISTOR
R111	RESISTOR
RT11	ROOM TEMP. THERMISTOR
RT12	COIL TEMP. THERMISTOR (MAIN)
RT13	COIL TEMP. THERMISTOR (SUB)
TB	TERMINAL BLOCK

NOTES:
1. About the outdoor side electronic wiring refer to the outdoor unit electronic wiring diagram for servicing.
2. Use copper supply wires.
3. Symbols indicate.
▭▭▭▭ : Terminal block ▭▭▭▭ : Connector

REMARQUES:
1. Pour le câblage électronique côté extérieur, se reporter au schéma d'entretien du câblage électronique de l'appareil extérieur.
2. Utiliser des fils d'alimentation en cuivre.
3. Les symboles ont les significations suivantes.
▭▭▭▭ : Borne ▭▭▭▭ : Connecteur

6 REFRIGERANT SYSTEM DIAGRAM

MSZ-FX06NL MSZ-FX09NL MSZ-FX12NL

Unit: inch (mm)

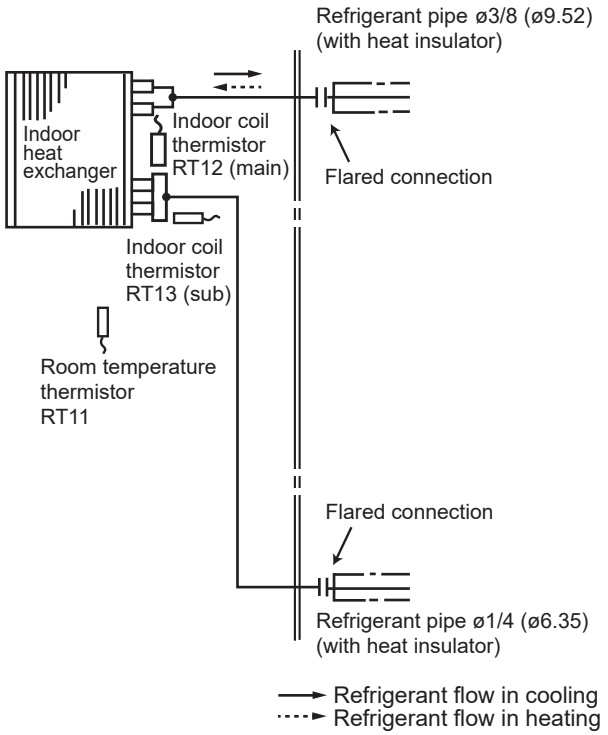

MSZ-FX15NL MSZ-FX18NL MSZ-FX24NL

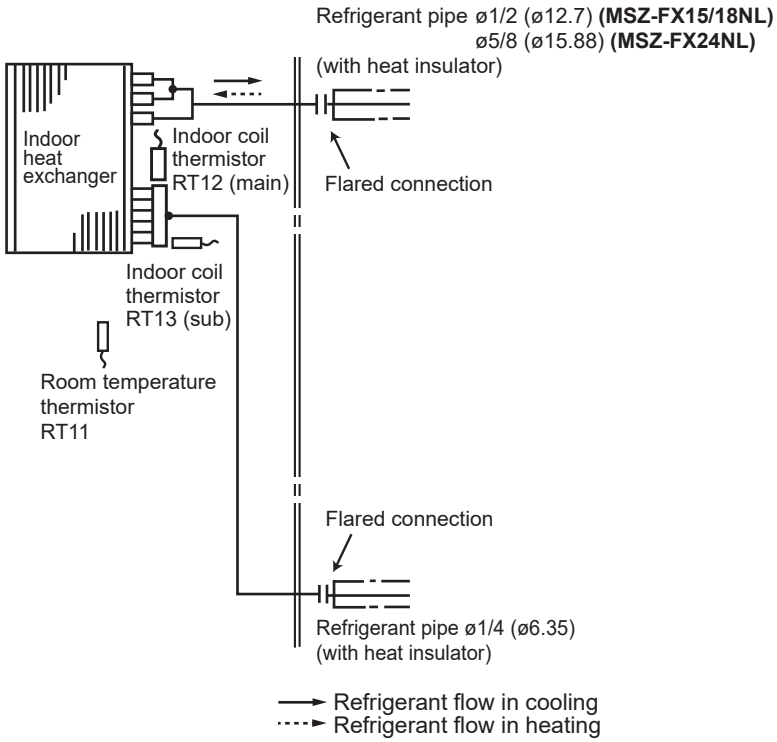

7 SERVICE FUNCTIONS

MSZ-FX06NL MSZ-FX09NL MSZ-FX12NL
MSZ-FX15NL MSZ-FX18NL MSZ-FX24NL

7-1. TIMER SHORT MODE

For service, the following set time can be shortened by bridging the timer short mode point on the electronic control P.C. board. The time will be shortened as follows. (Refer to 9-7.)
Set time : 1-minute ➔ 1-second
Set time : 3-minute ➔ 3-second (It takes 3 minutes for the compressor to start operation. However, the starting time is shortened by short circuit-of the timer short mode point.)

7-2. HOW TO SET REMOTE CONTROLLER EXCLUSIVELY FOR A PARTICULAR INDOOR UNIT

A maximum of 4 indoor units with wireless remote controllers can be used in a room.
To operate the indoor units individually with each remote controller, assign a number to each remote controller according to the number of the indoor unit.

This setting can be set only when all the following conditions are met:
- The remote controller is powered OFF.
- Weekly timer is not set.
- Weekly timer is not being edited.

(1) Hold down [1~4] button on the remote controller for 2 seconds to enter the pairing mode.
(2) Press [1~4] button again and assign a number to each remote controller.
Each press of [1~4] button advances the number in the following order: 1 → 2 → 3 → 4.
(3) Press [EDIT/SEND SET] button to complete the pairing setting.

After you turn the breaker ON, the remote controller that first sends a signal to an indoor unit will be regarded as the remote controller for the indoor unit.
Once they are set, the indoor unit will only receive the signal from the assigned remote controller afterwards.

7-3. SETTING THE INSTALLATION POSITION

Be sure to set the remote controller according to the installed position of the indoor unit.
Installation position:
Left: Distance to objects (wall, cabinet, etc.) is less than 20 inches (50 cm) to the left
Center: Distance to objects (wall, cabinet, etc.) is more than 20 inches (50 cm) to the left and right
Right: Distance to objects (wall, cabinet, etc.) is less than 20 inches (50 cm) to the right

(Left) (Center) (Right)

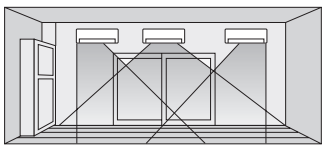

The installation position can be set only when all the following conditions are met:
- The remote controller is powered OFF.
- Weekly timer is not set.
- Weekly timer is not being edited.

(1) Hold down [WIDE VANE] button on the remote controller for 2 seconds to enter the position setting mode.
(2) Select the target installation position by pressing [WIDE VANE] button. (Each press of the [WIDE VANE] button displays the positions in order: center → right → left.)
(3) Press [EDIT/SEND SET] button to complete the position setting.

Installation position	Left	Center	Right
Remote controller display			

7-4. AUTO RESTART FUNCTION

When the indoor unit is controlled with the remote controller, the operation mode, the set temperature, and the fan speed are memorized by the indoor electronic control P.C. board. “AUTO RESTART FUNCTION” automatically starts operation in the same mode just before the shutoff of the main power.

Operation

① If the main power has been cut, the operation settings remain.
② After the power is restored, the unit restarts automatically according to the memory.
(However, it takes at least 3 minutes for the compressor to start running.)

How to disable “AUTO RESTART FUNCTION”

① Turn off the main power for the unit.
② Cut the jumper wire to JR77 on the indoor electronic control P.C. board. (Refer to 9-7.)

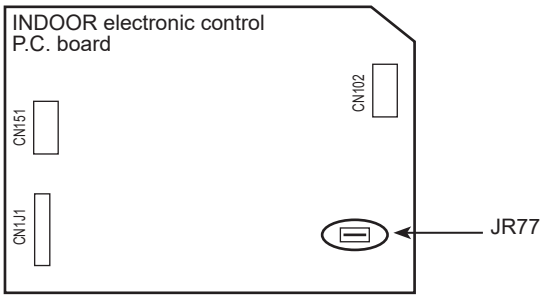

NOTE:

- The operation settings are memorized when 10 seconds have passed after the indoor unit was operated with the remote controller.
- If main power is turned OFF or a power failure occurs while AUTO START/STOP timer is active, the timer setting is canceled.
- If the unit has been turned OFF with the remote controller before power failure, the auto restart function does not work as the power button of the remote controller is OFF.
- To prevent the breaker from tripping OFF due to the rush of starting current, systematize other home appliance not to turn ON at the same time.
- When some air conditioners are connected to the same supply system, if they are operated before power failure, the starting current of all the compressors may flow simultaneously at restart.
  Therefore, the special counter-measures are required to prevent the main voltage-drop or the rush of the starting current by adding to the system that allows the units to start one by one.

7-5. Wi-Fi MODULE SETTING UP

1. Connection setup of the wireless LAN module

⚠ CAUTION

Wi-Fi® enabled indoor units:
- require a Wi-Fi® network with active internet connection for setup.
- are designed to connect to 2.4 GHz Wi-Fi® networks.
- will not work with 5 GHz or 6 GHz Wi-Fi® networks.

Some multi-band Wi-Fi® routers do not correctly manage 2.4 GHz-only devices.
For best results, use a separate SSID for the 2.4 GHz band.
Ensure that the installation will not exceed the Wi-Fi® router's connected device limit.
Verify that each indoor unit location has good Wi-Fi® signal strength. (-60 dBm or better). To improve reliability at locations with poor Wi-Fi® signal, apply a mesh Wi-Fi® system.

Start up: Refer to the kumocloud® Technician Manual for the installer.
https://docs.kumocloud.com/technician_manual.pdf

NOTE:
- If needed, use the remote controller to switch from the wireless network mode back to the Bluetooth LE configuration mode. Sending "¯3" with the remote controller switches the connection mode. Refer to 7-5.2. Wireless LAN Module Introduction – 7-5.4. When it doesn't connect well.
- Refer to 10. DISASSEMBLY INSTRUCTIONS for access to the Wireless LAN module.
- Visit https://kumocloud.com for additional information about controlling the Wireless LAN module from your web browser or smart phone.

2. Wireless LAN Module Introduction

This Wireless LAN module, communicates the status information and controls the commands from the kumocloud® by connecting to an indoor unit.

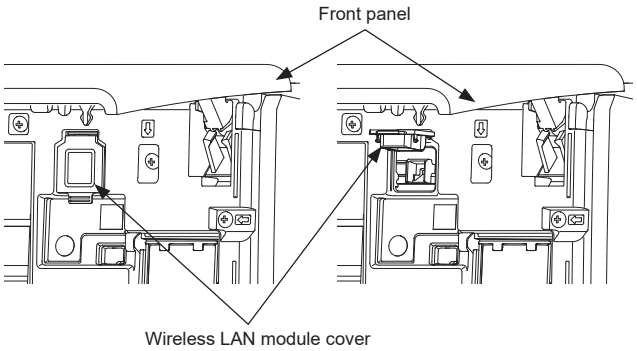

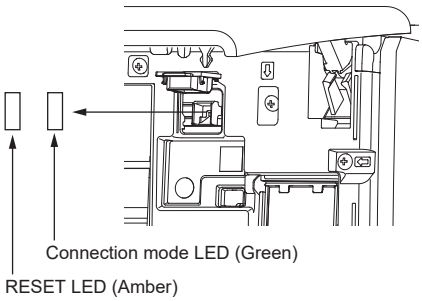

3. Setting Up

(1) Download the kumocloud® application.
https://www.mitsubishicomfort.com/kumocloud

(2) Create an account and log into it according to the owner manual of the kumocloud®.
Owner manual
https://docs.kumocloud.com/owner_manual.pdf

* Professional work is required to complete the setup of connecting the indoor unit to the kumocloud®.

4. When it doesn't connect well

Check the following, and pair the Wireless LAN module and the Router.

- Make sure that the Wireless LAN module connect to a 2.4 GHz Wi-Fi network.
  The Wireless LAN module will not work on 5 GHz Wi-Fi network.
- Make sure that the communication distance is not too far between the Wireless LAN module and the Router.
- Make sure that the number of connected devices to the Router does not exceed the limit.
- Check if the Router is connected to Internet.
- Set up the Wireless LAN module after operating the air conditioner using the wireless remote controller at least once.

Reconnect the Wireless Network

At the first install, the system will automatically start into network configuration mode. After the system has been configured to connect to a wireless network, in order to change the settings to a different network, the user can follow the instructions below to place the system back into network configuration mode.
Reconnect the wireless network after a new wireless router has been installed and connected to the internet or reconnect the wireless network if kumocloud® was set up in a new construction with a temporary network.

Sending "‾3" with the remote controller switches the connection mode.

- Press OFF/ON to stop the operation.
- Hold down the Temperature ⊕ for 5 seconds.
- Select "‾3" by pressing Temperature ⊕ and ⊖.
- Point the remote controller toward the indoor unit and press the OFF/ON.

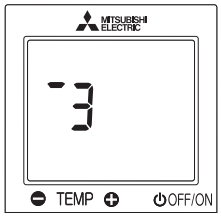

You can check the connection mode by the blinking state of the Connection mode LED (green light).

* The blinking state of the LED can change due to an update.
Refer to the latest operation manual of the kumocloud®.

NOTE:

The connection modes and the lighting/blinking state of each mode can change due to an update. Refer to the latest operation manual of the kumocloud®.

5. Checking the wireless setting status

You can check the transmission conditions with operation indicator lamp on indoor unit. Follow the procedure below when you cannot connect the wireless LAN module to the wireless network or transmission error occurs.

Wireless status display mode

- Press OFF/ON to stop the operation.
- Hold down the Temperature ⊕ for 5 seconds.
- Select "‾9" by pressing Temperature ⊕ and ⊖.
- Point the remote controller toward the indoor unit and press the OFF/ON.

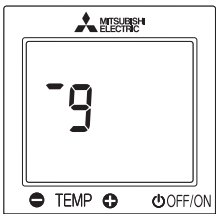

- After conecting the wireless LAN module to the kumo cloud®, you can check the transmission conditions with operation indicator lamp.
- Check the indicator lamp of wireless LAN module when you want to check the transmission conditions before connecting the wireless LAN module to the kumo cloud®.
- Refer to the operation manual of the kumo cloud® for operation indicator lamp on indoor unit and wireless LAN module.

NOTE:

- When operating the air conditioner from a position where you cannot see it, check the air conditioner, its surroundings, and the conditions of people in the room in advance.
- When there are people in the room, please let them know in advance that you will be operating the air conditioner from a distance.
- Ensure that the Router supports the WPA2-AES encryption setting before starting the Wireless LAN module setup.
- The End user should read and accept the terms and conditions of the kumocloud® service before using this Wireless LAN module.
- Use of the Wireless LAN module implies acceptance of our terms and conditions.
- To complete connection to the kumocloud® physical access to the access point may be required.
- This Wireless LAN module will not commence transmission of any operational data from the system until the End user registers and accepts the terms and conditions of the Wi-Fi service.
- This Wireless LAN module should not be connected to any Mitsubishi Electric system which is to provide cooling or heating to critical applications.

- Mitsubishi Electric's Wireless LAN module is designed for communication to Mitsubishi Electric's kumocloud®. Mitsubishi Electric is not responsible for any (i) underperformance of a system or any product;
  (ii) system or product fault; or (iii) loss or damage to any system or product; which is caused by or arises from connection to and/or use of any third party Wireless LAN module or any third party wireless or Wi-Fi service with Mitsubishi Electric equipment

The Wireless LAN module uses Open Source Software. To view the Open Source software licence(s), please refer to the Licenses.
https://docs.kumocloud.com/software_licenses.pdf

"Wi-Fi", "WPA2." are trademarks or registered trademarks of the Wi-Fi Alliance.

5. Specifications

Wireless LAN module specifications

Wireless LAN-compatible standard	IEEE802.11b/g/n
RF channel	1ch~11ch
Frequency Band	2.4GHz only
Security	WPA2 only
FCC ID	NKR-MB43
IC	4441A-MB43

8 MICROPROCESSOR CONTROL

MSZ-FX06NL MSZ-FX09NL MSZ-FX12NL
MSZ-FX15NL MSZ-FX18NL MSZ-FX24NL

WIRELESS REMOTE CONTROLLER

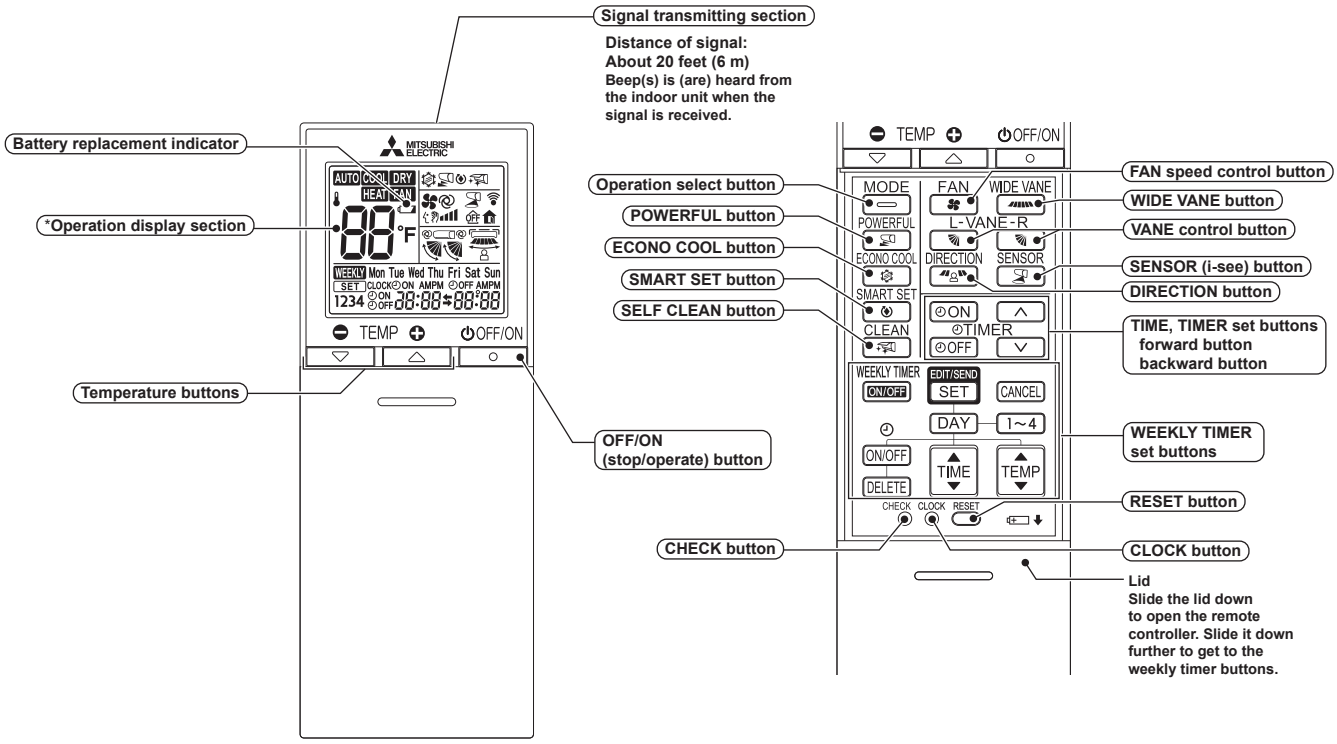

* The backlight turns on when using the remote controller.
The backlight goes off if the remote controller is not used for a while.

NOTE: Last setting will be stored after the unit is turned OFF with the remote controller. Indoor unit receives the signal of the remote controller with beeps.

INDOOR UNIT DISPLAY SECTION

Operation indicator lamp

The operation indicator at the right side of the indoor unit indicates the operation state.

• The following indication applies regardless of shape of the indication.

Indication	Operation state	Room temperature
☀ ☀	The unit is operating to reach the set temperature.	About 4°F (2°C) or more away from set temperature
☀ ○	The room temperature is approaching the set temperature.	About 2 to 4°F (1 to 2°C) from set temperature

☀ Lit
○ Not lit

8-1. COOL (COOL) OPERATION

(1) Press OFF/ON (stop/operate) button. Operation indicator lamp of the indoor unit turns on with a beep tone.
(2) Select COOL mode with Operation select button.
(3) Press Temperature buttons TEMP ⊖ or ⊕ button to select the desired temperature.
The setting range is 61 - 88°F (16 - 31°C).

1. Coil frost prevention

The compressor operational frequency is controlled by the temperature of the indoor heat exchanger to prevent the coil from frosting.
When the temperature of indoor heat exchanger becomes too low, the coil frost prevention mode works.
The indoor fan operates at the set speed and the compressor stops. This mode continues until the temperature of indoor heat exchanger rises.

2. Low outside temperature operation

When the outside temperature is lower, low outside temperature operation starts, and the outdoor fan slows or stops.

8-2. DRY (DRY) OPERATION

(1) Press OFF/ON (stop/operate) button. Operation indicator lamp of the indoor unit turns on with a beep tone.
(2) Select DRY mode with Operation select button.
(3) The set temperature is determined from the initial room temperature.

1. Coil frost prevention

Coil frost prevention works the same way as that in COOL mode. (8-1.1.)

2. Low outside temperature operation

Low outside temperature operation works the same way as that in COOL mode. (8-1.2.)

8-3. FAN (FAN) OPERATION

(1) Operation indicator lamp of the indoor unit turns on with a beep tone.
(2) Select FAN mode with Operation select button.
(3) Select the desired fan speed. When AUTO, it becomes Low.
Only indoor fan operates.
Outdoor unit does not operate.

8-4. HEAT (HEAT) OPERATION

(1) Press OFF/ON (stop/operate) button.
Operation indicator lamp of the indoor unit turns on with a beep tone.
(2) Select HEAT mode with Operation select button.
(3) Press Temperature buttons TEMP ⊖ or ⊕ button to select the desired temperature.
The setting range is 50 - 88°F (10 - 31°C).

1. Cold air prevention control

When the compressor is not operating or is starting, and the temperature of indoor heat exchanger and/or the room temperature is low or when defrosting is being done, the indoor fan will stop or rotate in Very Low speed.

2. High pressure protection

The compressor operational frequency is controlled by the temperature of the indoor heat exchanger to prevent the condensing pressure from increasing excessively.
When the temperature of indoor heat exchanger becomes too high, the high pressure protection works.
The indoor fan operates following the cold air prevention control. This mode continues until the temperature of indoor heat exchanger falls.

3. Defrosting

Defrosting starts when the temperature of outdoor heat exchanger becomes too low.
The compressor stops once, the indoor/outdoor fans stop, the 4-way valve reverses, and the compressor re-starts.
This mode continues until the temperature of outdoor heat exchanger rises or the fixed time passes.

8-5. AUTO CHANGE OVER ··· AUTO MODE OPERATION

Once desired temperature is set, unit operation is switched automatically between COOL and HEAT operation.

Mode selection

(1) Initial mode
When unit starts the operation with AUTO operation from OFF:
- If the room temperature is higher than the set temperature, operation starts in COOL mode.
- If the room temperature is equal to or lower than the set temperature, operation starts in HEAT mode.

(2) Mode change
COOL mode changes to HEAT mode when about 15 minutes have passed with the room temperature 2°F (1°C) below the set temperature.
HEAT mode changes to COOL mode when about 15 minutes have passed with the room temperature 2°F (1°C) above the set temperature.

8-6. AUTO VANE OPERATION

1. Horizontal vane

(1) Vane motor drive

These models are equipped with a stepping motors for the horizontal vanes. The rotating direction, speed, and angle of the motor are controlled by pulse signals (approximately 12 V) transmitted from indoor microprocessor.

(2) The horizontal vane angle and mode change as follows by pressing VANE CONTROL (L-VANE-R) button.

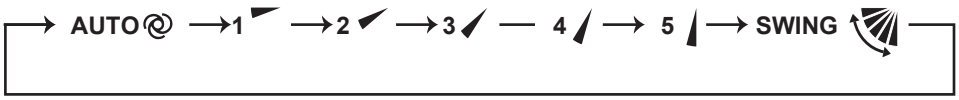

NOTE: The right and left horizontal vanes set to the same level may not align perfectly.

(3) Positioning

To confirm the standard position, the vane move until it touches the vane stopper. Then the vane is set to the selected angle.

Confirming of standard position is performed in the following cases:

(a) When the operation starts or finishes (including timer operation).

(b) When the test run starts.

(c) When standby mode (only during multi system operation) starts or finishes.

(4) VANE AUTO ( ) mode

In VANE AUTO mode, the microprocessor automatically determines the vane angle to make the optimum room temperature distribution.

In COOL and DRY operation
Vane angle is fixed to Horizontal position.

In HEAT operation
Vane angle is fixed to Angle 4.

(5) STOP (operation OFF) and ON TIMER standby

In the following cases, the horizontal vane returns to the closed position.

(a) When OFF/ON (stop/operate) button is pressed (POWER OFF).

(b) When the operation is stopped by the emergency operation.

(c) When ON TIMER is ON standby.

(6) Dew prevention

During COOL or DRY operation with the lower position when the compressor cumulative operation time exceeds 1 hour, the vane angle automatically changes to Angle 2 for dew prevention.

(7) SWING ( ) mode

By selecting SWING mode with VANE control button, the horizontal vanes swing vertically.

(8) Cold air prevention in HEAT operation

The horizontal vane position is set to upward.

NOTE: When 2 or more indoor units are operated with multi outdoor unit, even if any indoor unit turns thermostat off, this control does not work in the indoor unit.

(9) ECONO COOL ( ) operation (ECONOmical operation)

When ECONO COOL button is pressed in COOL mode, set temperature is automatically set 4°F (2°C) higher by the microprocessor. However, the temperature on the LCD screen on the remote controller is not changed. Also the horizontal vane swings in various cycle.

SWING operation makes you feel cooler than set temperature. So, even though the set temperature is higher, the air conditioner can keep comfort. As a result, energy can be saved.

To cancel this operation, select a different mode or press one of the following buttons in ECONO COOL operation: ECONO COOL, VANE control or POWERFUL button.

(10) POWERFUL ( ) operation

The air conditioner automatically adjusts the fan speed and the set temperature, and operates the POWERFUL mode. The POWERFUL mode is cancelled automatically 15 minutes after operation starts, or when POWERFUL button is pressed once again within 15 minutes after operation starts. The operation mode returns to the mode prior to POWERFUL operation. POWERFUL mode also is cancelled, when the OFF/ON (stop/operate), ECONO COOL or FAN speed control button is pressed within 15 minutes after operation starts, or operation mode is changed.

2. Vertical vane

(1) Vane motor drive

These models are equipped with a stepping motor for the vertical vane. The rotating direction, speed, and angle of the motor are controlled by pulse signals (approximately 12 V) transmitted from microprocessor.

(2) The vertical vane angle and mode change as follows by pressing WIDE VANE button.

(3) Positioning

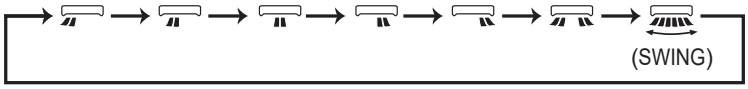

To confirm the standard position, the vane moves until it touches the vane stopper. Then the vane is set to the selected angle.

Confirming of standard position is performed in the following cases:

(a) OFF/ON (stop/operate) button is pressed (POWER ON).

(4) SWING ( ) MODE

By selecting SWING mode with WIDE VANE button, the vertical vane swings horizontally. The remote controller displays “ ”. Swing mode is canceled when WIDE VANE button is pressed once again.

8-7. TIMER OPERATION

1. How to set the time

(1) Check that the current time is set correctly.

NOTE: Timer operation will not work without setting the current time. Initially “12:00 AM” blinks at the current time display of TIME MONITOR, so set the current time correctly with CLOCK button.

How to set the current time

(a) Press the CLOCK button.

(b) Press the TIME SET buttons (and) to set the current time.

- Each time forward button ( ) is pressed, the set time increases by 1 minute, and each time backward button ( ) is pressed, the set time decreases by 1 minute.
- Pressing those buttons longer, the set time increases/decreases by 10 minutes.

(c) Press the CLOCK set button.

(2) Press OFF/ON (stop/operate) button to start the air conditioner.

(3) Set the time of timer.

ON timer setting

(a) Press ON TIMER button(ON) during operation.

(b) Set the time of the timer using TIME SET buttons (and). *

OFF timer setting

(a) Press OFF TIMER button (OFF) during operation.

(b) Set the time of the timer using TIME SET buttons (and). *

* Each time forward button ( ) is pressed, the set time increases by 10 minutes: each time backward button ( ) is pressed, the set time decreases by 10 minutes.

2. To release the timer

To release ON timer, press ON TIMER button (ON).

To release OFF timer, press OFF TIMER button(OFF).

TIMER is cancelled and the display of set time disappears.

PROGRAM TIMER

• OFF timer and ON timer can be used in combination. The set time that is reached first will operate first.
• "➡" and "⬅" display shows the order of OFF timer and ON timer operation.

(Example 1) The current time is 8:00 PM.
The unit turns off at 11:00 PM, and on at 6:00 AM.

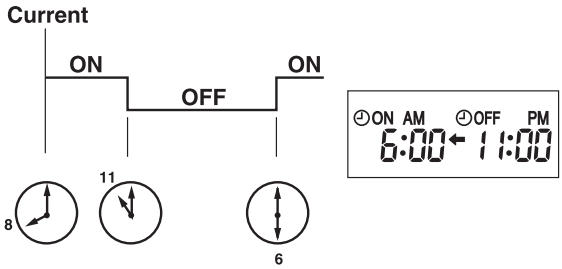

(Example 2) The current time is 11:00 AM.
The unit turns on at 5:00 PM, and off at 9:00 PM.

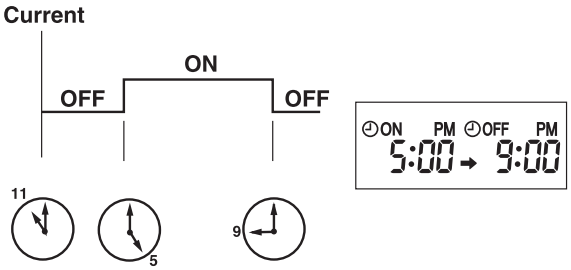

NOTE: If the main power is turned OFF or a power failure occurs while ON/OFF timer is active, the timer setting is cancelled. As these models are equipped with an auto restart function, the air conditioner starts operating with timer cancelled when power is restored.

8-8. WEEKLY TIMER OPERATION

• A maximum of 4 ON or OFF timers can be set for individual days of the week.
• A maximum of 28 ON or OFF timers can be set for a week.

E.g. : Runs at 75°F (24°C) from waking up to leaving home, and runs at 81°F (27°C) from getting home to going to bed on weekdays.
Runs at 81°F (27°C) from waking up late to going bed early on weekends.

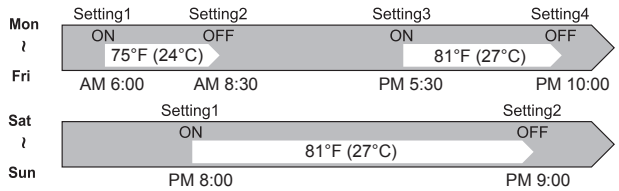

NOTE:
• The simple ON/OFF timer setting is available while the weekly timer is on. In this case, the ON/OFF timer has priority over the weekly timer; the weekly timer operation will start again after the simple ON/OFF timer is complete.
• When the weekly timer is set, temperature can not be set to 50°F (10°C).
• The weekly timer operation and SMART SET operation cannot be used together.

1. How to set the weekly timer

* Make sure that the current time and day are set correctly.

(1) Press [EDIT/SEND SET] button to enter the weekly timer setting mode.

* [SET] blinks.

(2) Press [DAY] and [1~4] buttons to select setting day and number.

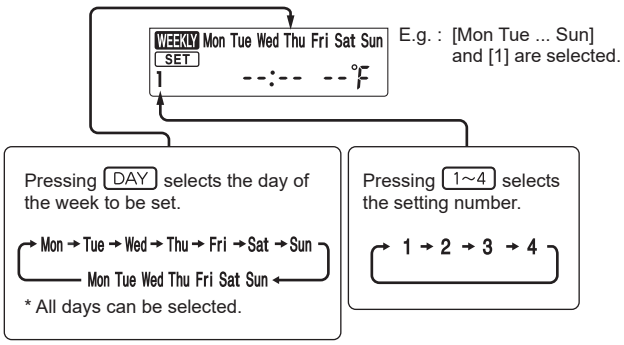

(3) Press ON/OFF, TIME, and TEMP buttons to set ON/OFF, time, and temperature.

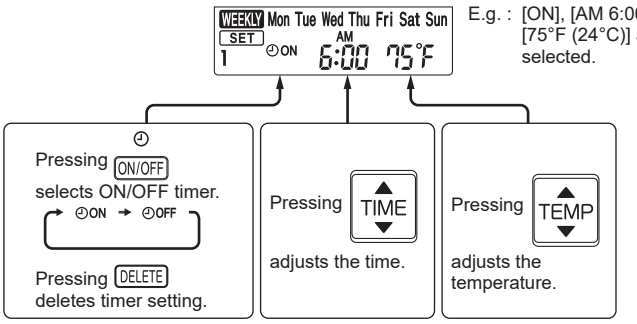

E.g. : [ON], [AM 6:00] and [75°F (24°C)] are selected.

* Hold down the button to change the time quickly.

* The temperature can be set between 61°F and 88°F (16°C and 31°C) at weekly timer.

Press DAY and 1~4 buttons to continue setting the timer for other days and/or numbers.

(4) Press EDIT/SEND SET button to complete and transmit the weekly timer setting.

* SET which was blinking goes out, and the current time will be displayed.

NOTE:

- Press EDIT/SEND SET button to transmit the setting information of weekly timer to the indoor unit. Point the remote controller toward the indoor unit for 3 seconds.
- When setting the timer for more than one day of the week or one number, EDIT/SEND SET button does not have to be pressed per each setting. Press EDIT/SEND SET button once after all the settings are complete. All the weekly timer settings will be saved.
- Press EDIT/SEND SET button to enter the weekly timer setting mode, and press and hold DELETE button for 5 seconds to erase all weekly timer settings. Point the remote controller toward the indoor unit.

(5) Press WEEKLY TIMER ON/OFF button to turn the weekly timer ON. (WEEKLY lights.)

- When the weekly timer is ON, the day of the week whose timer setting is complete, will light.

Press WEEKLY TIMER ON/OFF button again to turn the weekly timer OFF. (WEEKLY goes out.)

NOTE:

The saved settings will not be cleared when the weekly timer is turned OFF.

2. Checking weekly timer setting

(1) Press EDIT/SEND SET button to enter the weekly timer setting mode.
* SET blinks.

(2) Press DAY or 1~4 buttons to view the setting of the particular day or number.

(3) Press CANCEL button to exit the weekly timer setting.

NOTE:

When all days of the week are selected to view the settings and a different setting is included among them, --:-- --°F will be displayed.

8-9. i-see CONTROL ( ) MODE AND ABSENCE DETECTION

In the i-see control mode, the room temperature is controlled based on the sensible temperature.

(1) Press SENSOR button with a thin instrument during COOL, DRY, HEAT and AUTO mode to activate i-see control mode ( ). The default setting is “active”.

(2) Press SENSOR button several times to cancel i-see control mode.

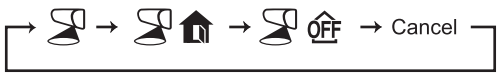

NOTE:

How to detect human presence

- When the air conditioner starts to operate, the i-see Sensor analyzes the temperature of a room by rotating clockwise and counterclockwise.
- Then, it detects human presence by their motion based on their heat signatures.

Detection range
The i-see Sensor does not analyze the temperature in the following range.
• The wall surface on which the air conditioner is installed
• The spot beneath the air conditioner
• Where there is an object (such as furniture) between the place and the air conditioner

It might not detect human and objects properly on the following conditions
• When the temperature of the floor and the wall is high (such as when the air conditioner starts to operate in summer)
• When occupants are in blanket or wear heavy clothing
• When there is an object whose temperature changes rapidly in a short time
• When windows and doors are small or they are far from the air conditioner
• When the sensor cannot detect the heat source such as of small kids or pets
• When using a floor heating or an electric carpet
• When occupants do not move after the air conditioner starts to operate
• When the air directly hits any obstacle such as furniture in HEAT mode
Refer to the following “Absence Detection” for and OFF.

ABSENCE DETECTION ( )

This function automatically changes the operation to No occupancy energy-saving mode or No occupancy Auto-OFF mode when nobody is in the room.

(1) To activate this No occupancy energy-saving mode, press SENSOR button until appears on the operation display of the remote controller.

(2) To activate this No occupancy Auto-OFF mode, press SENSOR button until OFF appears on the operation display of the remote controller.

(3) Press SENSOR button again to cancel the ABSENCE DETECTION.

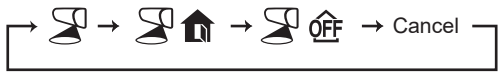

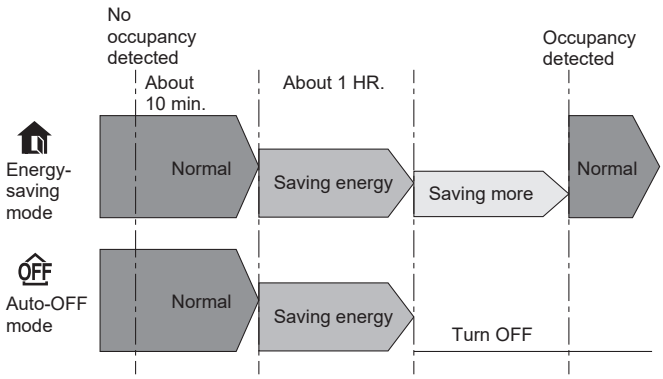

• Even if the unit is turned OFF due to No occupancy Auto-OFF mode, the display of the remote controller remains to indicate the unit is in operation. Press STOP/OPERATE(OFF/ON) button then press STOP/OPERATE(OFF/ON) button again to restart operation.
• When OFF timer is set, a priority is given to OFF timer.
• The unit will not be turned off if no one is detected during normal operation mode, even though No occupancy Auto-OFF mode is activated.

8-10. AIRFLOW CONTROL MODE

Airflow Control mode offers air conditioning according to a location of an occupant in a room detected by i-see Sensor.

(1) Press DIRECTION button during COOL, DRY, HEAT or AUTO mode to activate the AIRFLOW CONTROL mode. This mode is only available when the i-see control mode is effective.

(2) Each press of DIRECTION button changes AIRFLOW CONTROL in the following order:

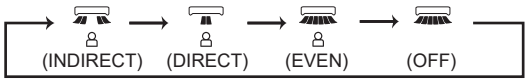

(INDIRECT): An occupant will be less exposed to direct airflow.

(DIRECT) : Mainly the vicinity of an occupant will be air-conditioned.

(EVEN) : The unit learns the area where an occupant spend most of the time, and evens out the temperature of that area.

NOTE:

- Horizontal and vertical airflow directions will be automatically selected.
- When more than a couple of people are in a room, the AIRFLOW CONTROL mode may work less effectively.
- If you still feel uncomfortable with the air direction determined by the INDIRECT mode, adjust the air direction manually.
- When you move to a new house or rearrange the room, hold down DIRECTION button for 5 seconds during operation. The indoor unit beeps twice and starts to learn the area where an occupant spend most of the time in the new or rearranged room. (This operation cannot be performed when the timer is set.)
- Cancelling the i-see control mode automatically cancels the AIRFLOW CONTROL mode. The AIRFLOW CONTROL mode is also cancelled when the VANE or WIDE VANE buttons is pressed.

8-11. SELF CLEAN OPERATION

SELF CLEAN operation helps to keep the unit clean by performing FAN operation for about 25 minutes. It is recommended to keep SELF CLEAN operation active at all times.

(1) Press SELF CLEAN button to activate SELF CLEAN operation.
- The unit performs SELF CLEAN operation when it is stopped with the [OFF/ON] or OFF timer after COOL/DRY operation. Operation indicator lamp turns on. (Display section)
- SELF CLEAN operation is not performed when: COOL/DRY is operated less than 3 minutes.

(2) Press SELF CLEAN button again to deactivate SELF CLEAN operation.
- Pressing [OFF/ON] does not deactivate SELF CLEAN operation.

NOTE:

- Fan is stopped for the first 3 minutes of SELF CLEAN operation.
- During multi system operation, air from the unit may become warm. In this case, SELF CLEAN operation is cancelled automatically to prevent undesirable rise in room temperature.

8-12. SMART SET (⊛) OPERATION

1. How to set SMART SET operation

(1) Press OFF/ON (stop/operate) button.
(2) Select COOL, HEAT mode.
(3) Press SMART SET button.
(4) Set the temperature, fan speed, and airflow direction for SMART SET operation.

NOTE:

- SMART SET operation cannot be selected during DRY or AUTO mode operation.
- The setting range of HEAT mode SMART SET operation is 50 - 88°F (10 - 31°C).
- 2 groups of setting can be saved. (One for COOL, one for HEAT)
- SMART SET operation and the weekly timer operation cannot be used together.

2. How to cancel operation

- Press SMART SET button again.
- SMART SET operation can also be cancelled by pressing Operation select button to change the operation mode. The preferred setting can be saved for the next time with a single press of SMART SET button.

8-13. EMERGENCY/TEST OPERATION

In the case of test run operation or the emergency operation, use the emergency operation switch on the right side of the indoor unit. The emergency operation is available when the remote controller is missing or has failed, or when the batteries in the remote controller are running down. The unit will start and the operation indicator lamp will light up.
The first 30 minutes of operation is the test run operation. This operation is for servicing. The indoor fan runs at High speed and the temperature control does not work.
After 30 minutes of test run operation, the system shifts to EMERGENCY COOL/HEAT MODE with a set temperature of 75°F (24°C). The fan speed shifts to Med.
The coil frost prevention works even in the test run or the emergency operation.
In the test run or the emergency operation, the horizontal vane operates in VANE AUTO (@) mode.
The emergency operation continues until the emergency operation switch is pressed once or twice or the unit receives any signal from the remote controller. In the latter case, normal operation will start.

NOTE: Do not press the emergency operation switch during normal operation.

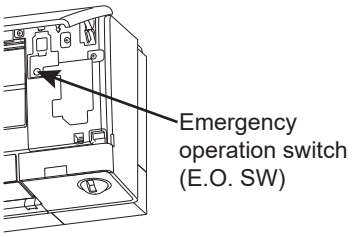

Operation mode	COOL/HEAT
Set temperature	75°F (24°C)
Fan speed	Medium
Horizontal vane	Auto

The operation mode is indicated by the operation indicator lamp as following

Operation indicator lamp

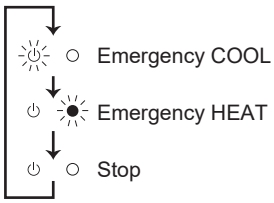

8-14. 3-MINUTE TIME DELAY OPERATION

When the system turns OFF, compressor will not restart for 3 minutes as 3-minute time delay function operates to protect compressor from overload.

8-15. Changing temperature indication (°F/°C)

The preset unit is °F.

• °F → °C / °C → °F: Press RESET button while the Temperature buttons are pressed.

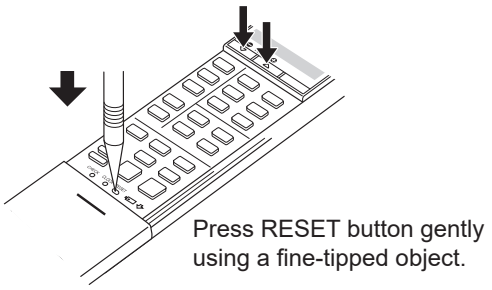

9 TROUBLESHOOTING

MSZ-FX06NL MSZ-FX09NL MSZ-FX12NL
MSZ-FX15NL MSZ-FX18NL MSZ-FX24NL

9-1. CAUTIONS ON TROUBLESHOOTING

1. Before troubleshooting, check the following

1) Check the power supply voltage.
2) Check the indoor/outdoor connecting wire for miswiring.

2. Take care of the following during servicing

1) Before servicing the air conditioner, be sure to turn OFF the main unit first with the remote controller, and then after confirming the horizontal vane is closed, turn OFF the breaker and/or disconnect the power plug.
2) Be sure to turn OFF the power supply before removing the front panel, the cabinet, the top panel, and the P.C. board.
3) When removing the P.C. board, hold the edge of the board with care NOT to apply stress on the components.
4) When connecting or disconnecting the connectors, hold the connector housing. DO NOT pull the lead wires.

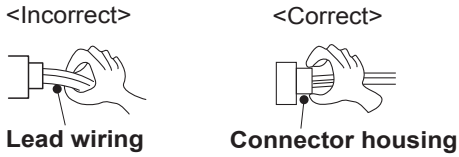

3. Troubleshooting procedure

1) Check if the operation indicator lamp on the indoor unit is blinking ON and OFF to indicate an abnormality.
   To make sure, check how many times the operation indicator lamp is blinking ON and OFF before starting service work.
2) Before servicing, verify that all connectors and terminals are connected properly.
3) When the electronic control P.C. board seems to be defective, check for disconnection of the copper foil pattern and burnt or discolored components.
4) When troubleshooting, Refer to 9-2, 9-3 and 9-4.

4. How to replace batteries

Weak batteries may cause the remote controller malfunction.
In this case, replace the batteries to operate the remote controller normally.

① Remove the front lid and insert batteries.
Then reattach the front lid.

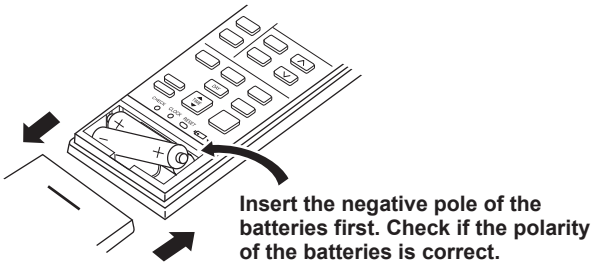

② Press RESET button with a fine-tipped object, and then use the remote controller.

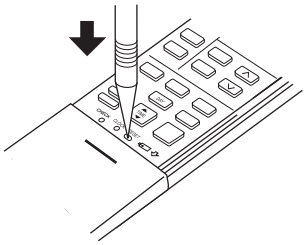

NOTE: 1. If RESET button is not pressed, the remote controller may not operate correctly.
2. This remote controller has a circuit to automatically reset the microprocessor when batteries are replaced. This function is equipped to prevent the microprocessor from malfunctioning due to the voltage drop caused by the battery replacement.
3. Do not use the leaking batteries.

9-2. FAILURE MODE RECALL FUNCTION AND ERROR CODE DISPLAY MODE

Outline of the function

This air conditioner can memorize the failure which has occurred last time.

Even though LED indication listed on the troubleshooting check table (9-4.) disappears, the memorized failure can be recalled.

Also, error code can be checked on the display of remote controller while the left operation indicator lamp on the indoor unit is blinking.

1. Flow chart of failure mode recall function for the indoor/outdoor unit

Operational procedure

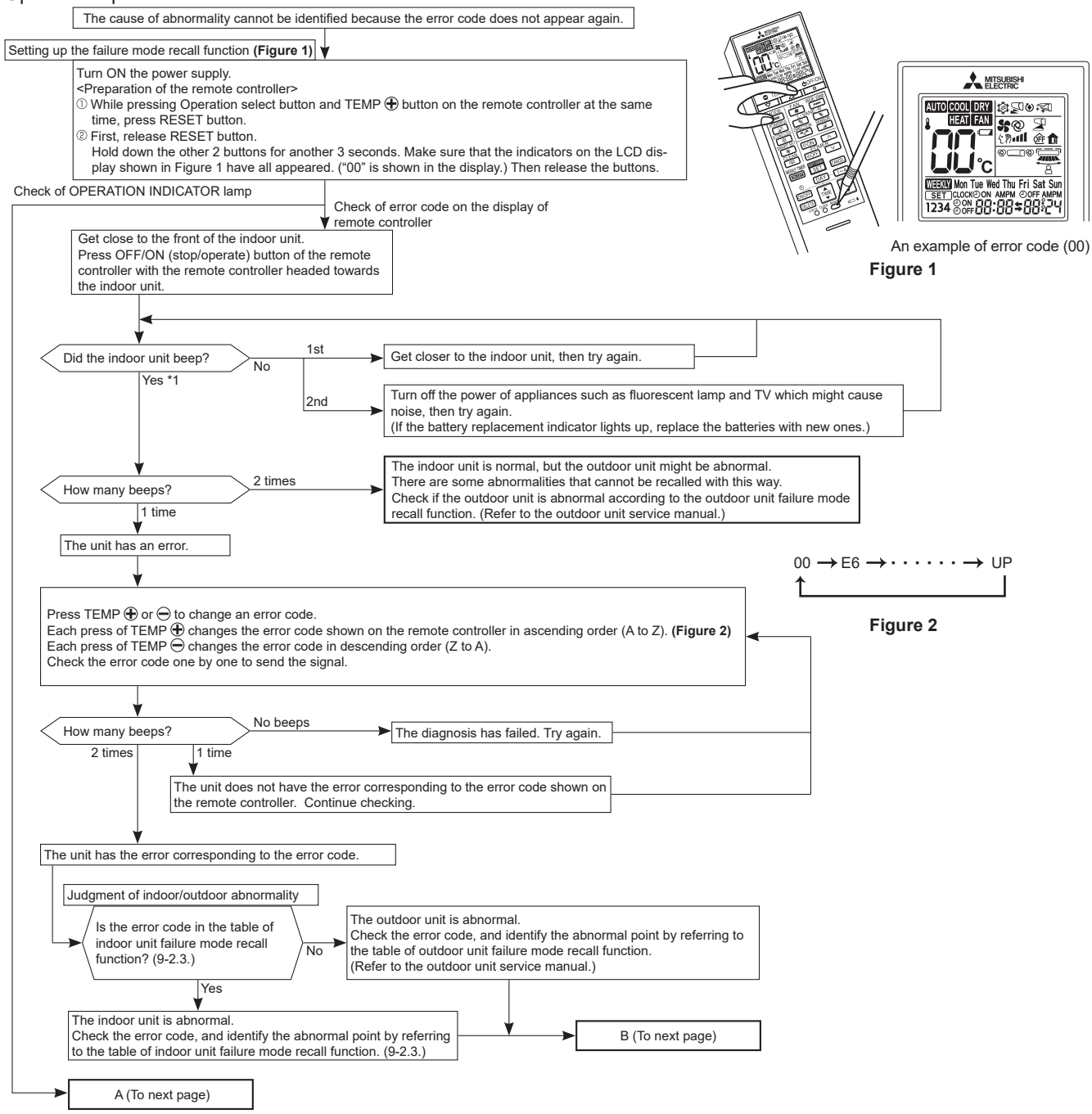

A (From previous page)

Press OFF/ON (stop/operate) button of the remote controller with the remote controller headed towards the indoor unit. *1.

Does the left OPERATION INDICATOR lamp on the indoor unit blink at the interval of 0.5 seconds?

No (OFF) → The indoor unit is normal, but the outdoor unit might be abnormal.
There are some abnormalities that cannot be recalled with this way.
Check if the outdoor unit is abnormal according to the outdoor unit failure mode recall function. (Refer to the outdoor unit service manual.)

NOTE: It takes up to 1 minute to indicate the outdoor unit abnormality.
Even if the OPERATION INDICATOR lamp is not blinking, keep checking at least 1 minute or longer.

Yes (Blinks)

Judgment of indoor/outdoor abnormality

Before blinking, does the left OPERATION INDICATOR lamp stay ON for 3 seconds?

Yes → The outdoor unit is abnormal.
Check the blinking pattern, and identify the abnormal point by referring to the table of outdoor unit failure mode recall function.
(Refer to outdoor unit service manual.)
Make sure to check at least 2 consecutive blinking cycles. *3

No → The indoor unit is abnormal.
Check the blinking pattern, and identify the abnormal point by referring to the table of indoor unit failure mode recall function. (9-2.3.)
Make sure to check at least 2 consecutive blinking cycles. *2

B (From previous page)

Releasing the failure mode recall function

Release the failure mode recall function by the following procedures.
Turn OFF the power supply and turn it ON again.
Press RESET button of the remote controller.

Repair the failure parts.

Deleting the memorized abnormal condition

① After repairing the unit, recall the failure mode again according to “Setting up the failure mode recall function” mentioned above.
② Press OFF/ON (stop/operate) button of the remote controller with the remote controller headed towards the indoor unit.
③ Press the emergency operation switch so that the memorized abnormal condition is deleted.
④ Release the failure mode recall function according to “Releasing the failure mode recall function” mentioned above.

NOTE: 1. Make sure to release the failure mode recall function after it is set up, otherwise the unit cannot operate properly.
2. If the abnormal condition is not deleted from the memory, the last abnormal condition is kept memorized.

*1. Regardless of normal or abnormal condition, a short beep is emitted once the signal is received.

*2. Blinking pattern when the indoor unit is abnormal:

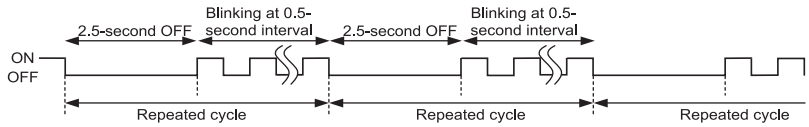

*3. Blinking pattern when the outdoor unit is abnormal:

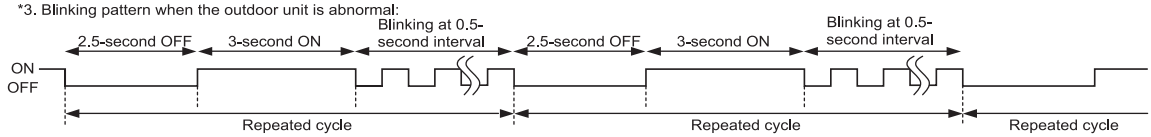

2. Flow chart of error code display mode

This explains how customers can check the error code on their own.
This is included in OPERATING INSTRUCTIONS.

Operational procedure

The remote controller is powered OFF.

Get close to the front of the indoor unit. Point the remote controller at the receiving section of the indoor unit, and keep pressing CHECK with a fine-tipped object. **(Figure 1)**
"00" is shown in the display. **(Figure 2)**
Keep pointing the remote controller at the receiving section of the indoor unit until the indoor unit beeps.

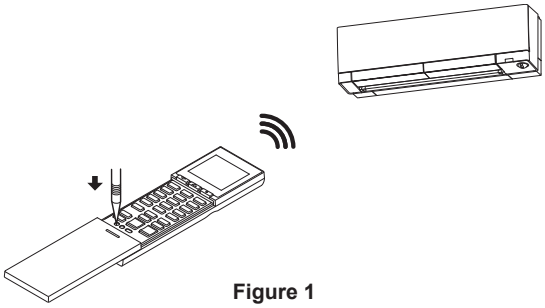

Figure 1

Did the indoor unit beep?

- No, 1st → Get closer to the indoor unit, then try again.
- No, 2nd → Turn off the power of appliances such as fluorescent lamp and TV which might cause noise, then try again.
  (If the battery replacement indicator lights up, replace the batteries with new ones.)
- Yes ↓

How many beeps?

- 2 times → The indoor unit is normal, but the outdoor unit might be abnormal. There are some abnormalities that cannot be recalled with this way. Check if the outdoor unit is abnormal according to the outdoor unit failure mode recall function. (Refer to the outdoor unit service manual.)
- 1 time ↓

The unit has an error.

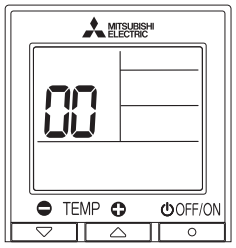

Figure 2

NOTE: Even though the air conditioner operates normally, the memorized indication for the last error appears if it has not been deleted.

Press TEMP ⊕ or ⊖ to change an error code.
Each press of TEMP ⊕ changes the error code shown on the remote controller in ascending order (A to Z). **(Figure 3)**
Each press of TEMP ⊖ changes the error code in descending order (Z to A).
Check the error code one by one to send the signal.

00 → E6 → · · · · · · → UP

Figure 3

How many beeps?

- No beeps → The diagnosis has failed. Try again.
- 2 times ↓
- 1 time → The unit does not have the error corresponding to the error code shown on the remote controller. Continue checking.

The unit has the error corresponding to the error code.

Refer to the error code on the table of indoor unit failure mode recall function (9-2.3.) or the table of outdoor unit failure mode recall function (refer to the outdoor unit service manual).

3. Table of indoor unit failure mode recall function

The left lamp of the operation indicator lamp	Error code	Abnormal point (Failure mode)	Condition	Remedy
Not lit	00	Normal	—	—
1-time blink every 0.5-second	P1	Room temperature thermistor	The room temperature thermistor short or open circuit is detected every 8 seconds during operation.	Refer to the characteristics of the room temperature thermistor (9-7.).
2-time blink 2.5-second OFF	P2 P9	Indoor coil thermistor	The indoor coil thermistor short or open circuit is detected every 8 seconds during operation.	Refer to the characteristics of the main indoor coil thermistor, the sub indoor coil thermistor (9-7.).
3-time blink 2.5-second OFF	E6 E7	Serial signal	The serial signal from outdoor unit is not received for a maximum of 6 minutes.	Refer to 9-6.Ⓓ “How to check miswiring and serial signal error”.
4-time blink 2.5-second OFF	P4	Drain sensor	CN1S1 is open over 3 minutes.	Check CN1S1.
7-time blink 2.5-second OFF	EE	Combination of indoor and outdoor units	The refrigerant types specified for the indoor and outdoor units do not match.	The refrigerant types specified for the indoor and outdoor units do not match.
11-time blink 2.5-second OFF	Pb	Indoor fan motor	The rotational frequency feedback signal is not emitted for 12 seconds after the indoor fan motor is operated.	Refer to 9-6.Ⓐ “Check of indoor fan motor”.
12-time blink 2.5-second OFF	Fb	Indoor control system	It cannot properly read data in the nonvolatile memory of the indoor electronic control P.C. board.	Replace the indoor electronic control P.C. board. “EE” error may be detected together with “Fb” error for the outdoor unit. When the indoor and outdoor units are connected in the allowed combination, respond only to “Fb” error.
14-time blink 2.5-second OFF 3-second ON	FH	Refrigerant sensor	The refrigerant sensor mounted on the indoor unit does not work. The refrigerant sensor is not connected properly or the wire is broken.	Connect the connector of the refrigerant sensor properly. Replace the refrigerant sensor.
14-time blink 2.5-second OFF 3-second ON	FL	Refrigerant leakage (Sensor detection)	1. Refrigerant leaks from the piping or the heat exchanger in the indoor unit. 2. The following items are used around the Iindoor unit. • Spray (LP gas including Freon, and whose main ingredient is propane and butane) • Aerosol insecticide (including ethanol) • Air spray painting (including dichloromethane) • Charcoal (charcoal fire) • Chemicals (such as ethanol)	• Open the window to ventilate the room. After FAN operation is finished, turn off the breaker. (FAN operation will continue for about 7 hours.) • Check the indoor unit to detect the part where refrigerant leaks. • Repair the part where refrigerant leaks. • Turn on the breaker again. • Replace the refrigerant sensor if the problem is not fixed.

NOTE: Blinking patterns of this mode differ from the ones of TROUBLESHOOTING CHECK TABLE (9-4.).

4. Operation check on i-see sensor

While recalling the failure details, set the temperature to 66°F (19°C) to perform the simple check on the i-see sensor.
Place your hand over the i-see sensor, and the buzzer will beep at 1 second intervals. (Normal detection temperature range is 93 to 102°F (34 to 39°C).)
If the buzzer does not beep, check for disconnection of the connectors.
Set the temperature to 73°F (23°C) to exit the simple check mode on the i-see sensor.

The left lamp of the operation indicator lamp	Abnormal point (Failure mode)	Condition	Remedy
6-time blink	i-see sensor	Poor contact in i-see sensor wiring Failure in loading corrected data of i-see sensor	Check for disconnection of the connectors.

9-3. INSTRUCTION OF TROUBLESHOOTING

1. Check of the unit.

*1 "Test Run operation" means the operation within 30 minutes after the emergency operation switch is pressed.

*2 There is possibility that diesel explosion may occur due to the air mixed in the refrigerant circuit.
First, ensure that there are no leakage points on the valves, flare connections, etc. that allow the air to flow into the refrigerant circuit, or no blockage points (e.g. clogged or closed valves) in the refrigerant circuit that cause an increase in pressure.
If there is no abnormal point like above and the system operates cooling and heating modes normally, the indoor thermistor might have a problem, resulting in false detection.
Check both the indoor coil thermistor and the room temperature thermistor, and replace faulty thermistor(s), if any.
NOTE: Do not start the operation again without repair to prevent hazards.

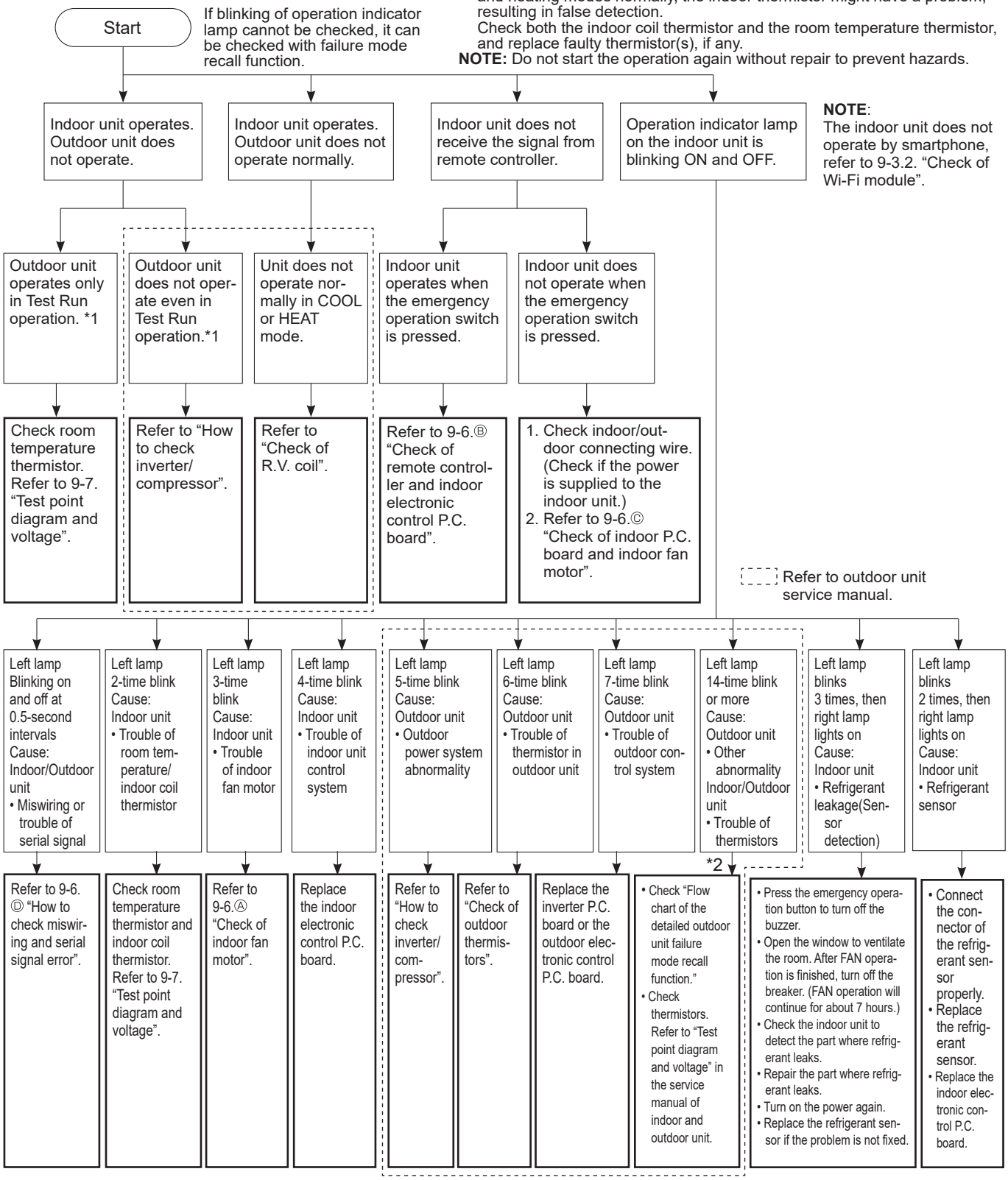

2. Check of Wi-Fi module

Follow the procedure below if the air conditioner cannot be monitored or controlled with a device such as a smartphone.

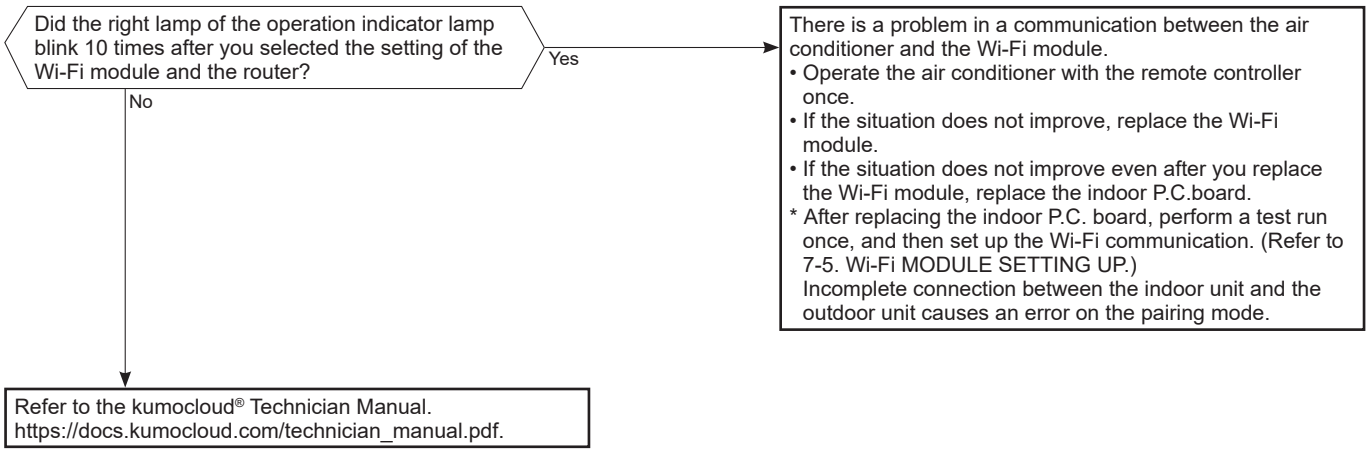

9-4. TROUBLESHOOTING CHECK TABLE

Before taking measures, make sure that the symptom reappears for accurate troubleshooting.
When the indoor unit has started operation and detected an abnormality of the following condition (the first detection after the power ON), the indoor fan motor turns OFF and the operation indicator lamp blinks.

• The following indicator applies regardless of shape of the indication.

OPERATION INDICATOR ☼ ○

● Lit
☼ Blinking
○ Not lit

No.	Abnormal point	Operation indicator lamp	Symptom	Condition	Remedy
1	Miswiring or serial signal	Left lamp blinks. 0.5-second ON 0.5-second OFF	Indoor unit and outdoor unit do not operate.	The serial signal from the outdoor unit is not received for 6 minutes.	• Refer to 9-6. Ⓓ "How to check miswiring and serial signal error".
2	Indoor coil thermistor Room temperature thermistor	Left lamp blinks. 2-time blink 2.5-second OFF		The indoor coil or the room temperature thermistor is short or open circuit.	• Refer to the characteristics of indoor coil thermistor, and the room temperature thermistor (9-7.).
3	Indoor fan motor	Left lamp blinks. 3-time blink 2.5-second OFF		The rotational frequency feedback signal is not emitted during the indoor fan operation.	• Refer to 9-6. Ⓐ "Check of indoor fan motor".
4	Indoor control system	Left lamp blinks. 4-time blink 2.5-second OFF		It cannot properly read data in the nonvolatile memory of the indoor electronic control P.C. board.	• Replace the indoor electronic control P.C. board. • "EE" error may be detected together with "Fb" error for the outdoor unit. When the indoor and outdoor units are connected in the allowed combination, respond only to "Fb" error.
5	Outdoor power system	Left lamp blinks. 5-time blink 2.5-second OFF		It consecutively occurs 3 times that the compressor stops for overcurrent protection or startup failure protection within 1 minute after startup.	• Refer to "How to check of inverter/compressor". Refer to outdoor unit service manual • Check the stop valve.
6	Outdoor thermistors	Left lamp blinks. 6-time blink 2.5-second OFF		The outdoor thermistors short or open circuit during the compressor operation.	• Refer to "Check of outdoor thermistor". Refer to outdoor unit service manual.
7	Outdoor control system	Left lamp blinks. 7-time blink 2.5-second OFF		It cannot properly read data in the nonvolatile memory of the inverter P.C. board or the outdoor electronic control P.C. board.	• Replace the inverter P.C. board or the outdoor electronic control P.C. board. Refer to outdoor unit service manual.
8	Indoor electronic control P.C. board	Left lamp blinks 9-time blink 2.5-second OFF		CN1S1 is open over 3 minutes.	• Check CN1S1.
9	Other abnormality *1	Left lamp blinks. 14-time blink or more 2.5-second OFF		An abnormality other than the above is detected. An abnormality of the indoor thermistors, the defrost thermistor or ambient temperature thermistor is detected.	• Check the stop valve. • Check the 4-way valve. • Check the abnormality in detail using the failure mode recall function for outdoor unit. • Refer to TEST POINT DIAGRAM AND VOLTAGE" on the service manual of indoor and outdoor unit for the characteristics of the thermistors. (Do not start the operation again without repair to prevent hazards.)
10	Outdoor control system	Left lamp lights up.	Outdoor unit does not operate	It cannot properly read data in the nonvolatile memory of the inverter P.C. board or the outdoor electronic control P.C. board.	• Check the blinking pattern of the LED on the inverter P.C. board or the outdoor electronic control P.C. board.
11	Refrigerant sensor	Left lamp blinks 2 times, then right lamp lights on. Left lamp 3.0-second OFF Right lamp 3.0-second ON	• FAN operation starts, and swing the horizontal vane and vertical vane. • It cannot be controlled by the remote controller.	The refrigerant sensor mounted on the indoor unit does not work. The refrigerant sensor is not connected properly or the wire is broken.	• Connect the connector of the refrigerant sensor properly. • Replace the refrigerant sensor.

*1 Refer to *2 on 9-3. INSTRUCTION OF TROUBLESHOOTING.

No.	Abnormal point	Operation indicator lamp	Symptom	Condition	Remedy
12	Refrigerant leakage (Sensor detection)	Left lamp blinks 3 times, then right lamp lights on. Left lamp ●○●○●○○○○○○○● 3.0-second OFF Right lamp ○○○○○○●●●●●●○ 3.0-second ON	• The buzzer sounds. • FAN operation starts, and swing the horizontal vane and vertical vane. • It cannot be controlled by the remote controller.	1. Refrigerant leaks from the piping or the heat exchanger in the indoor unit. 2. The following items are used around the Iindoor unit. • Spray (LP gas including Freon, and whose main ingredient is propane and butane) • Aerosol insecticide (including ethanol) • Air spray painting (including dichloromethane) • Charcoal (charcoal fire) • Chemicals (such as ethanol)	• Press the emergency operation button to turn off the buzzer. • Open the window to ventilate the room. After FAN operation is finished, turn off the breaker. (FAN operation will continue for about 7 hours.) • Check the indoor unit to detect the part where refrigerant leaks. • Repair the part where refrigerant leaks. • Turn on the power again. • Replace the refrigerant sensor if the problem is not fixed.

9-5. TROUBLESHOOTING CRITERION OF MAIN PARTS

MSZ-FX06NL MSZ-FX09NL MSZ-FX12NL MSZ-FX15NL MSZ-FX18NL MSZ-FX24NL

Part name	Check method and criterion	Figure
Room temperature thermistor (RT11) Indoor coil thermistor (RT12, RT13)	Measure the resistance with a multimeter. Refer to 9-7. “Test point diagram and voltage”, “Indoor electronic control P.C. board”, for the chart of thermistor.	
Indoor fan motor (MF)	Check 9-6.Ⓐ “Check of indoor fan motor”.	
Vane motor (MV1) (HORIZONTAL)	Measure the resistance between the terminals with a multimeter. (Temperature: 10 – 30°C) Color of the lead wire: RED - BRN Normal: 262 - 328 Ω	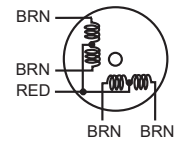
Vane motor (MV2) (VERTICAL)	Measure the resistance between the terminals with a multimeter. (Temperature: 10 – 30°C) Color of the lead wire: RED - BRN Normal: 219 - 273 Ω	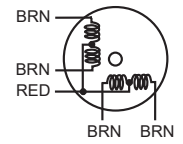
i-see SENSOR MOTOR (MT)	Measure the resistance between the terminals with a multimeter. (Temperature: 10 – 30°C) Color of the lead wire: RED - YLW Normal: 262 - 328 Ω	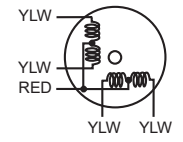

9-6. TROUBLESHOOTING FLOW

Ⓐ Check of indoor fan motor

The indoor fan motor error has occurred, and the indoor fan does not operate.

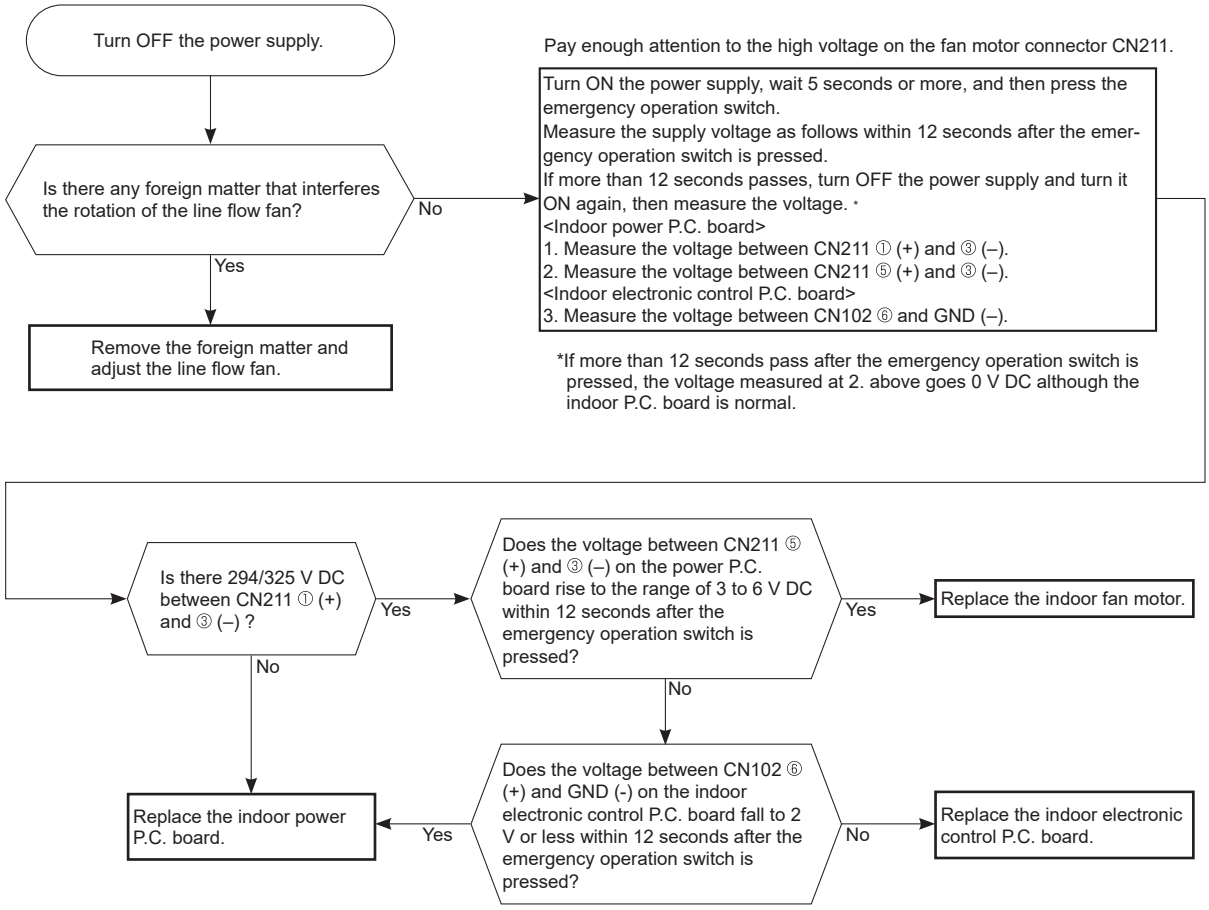

The indoor fan motor error has occurred, and the indoor fan repeats “12-second ON and 30-second OFF” 3 times, and then stops.

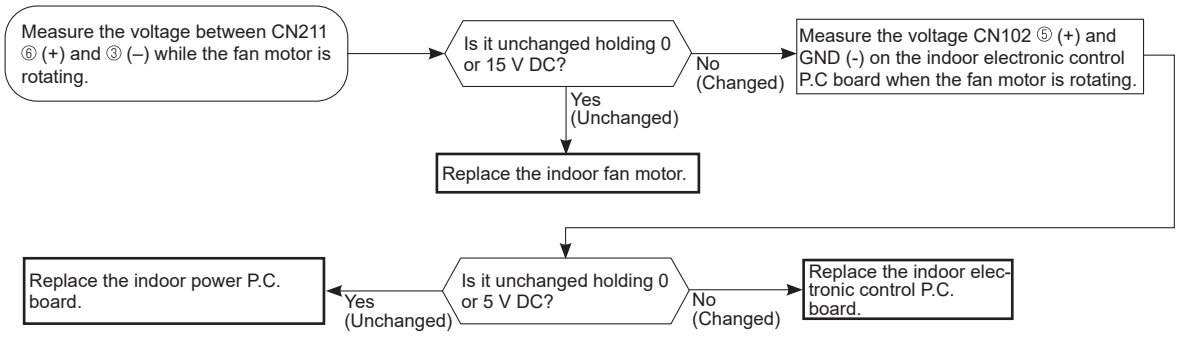

Ⓑ Check of remote controller and indoor electronic control P.C. board

NOTE: Check if the remote controller is exclusive for this air conditioner.

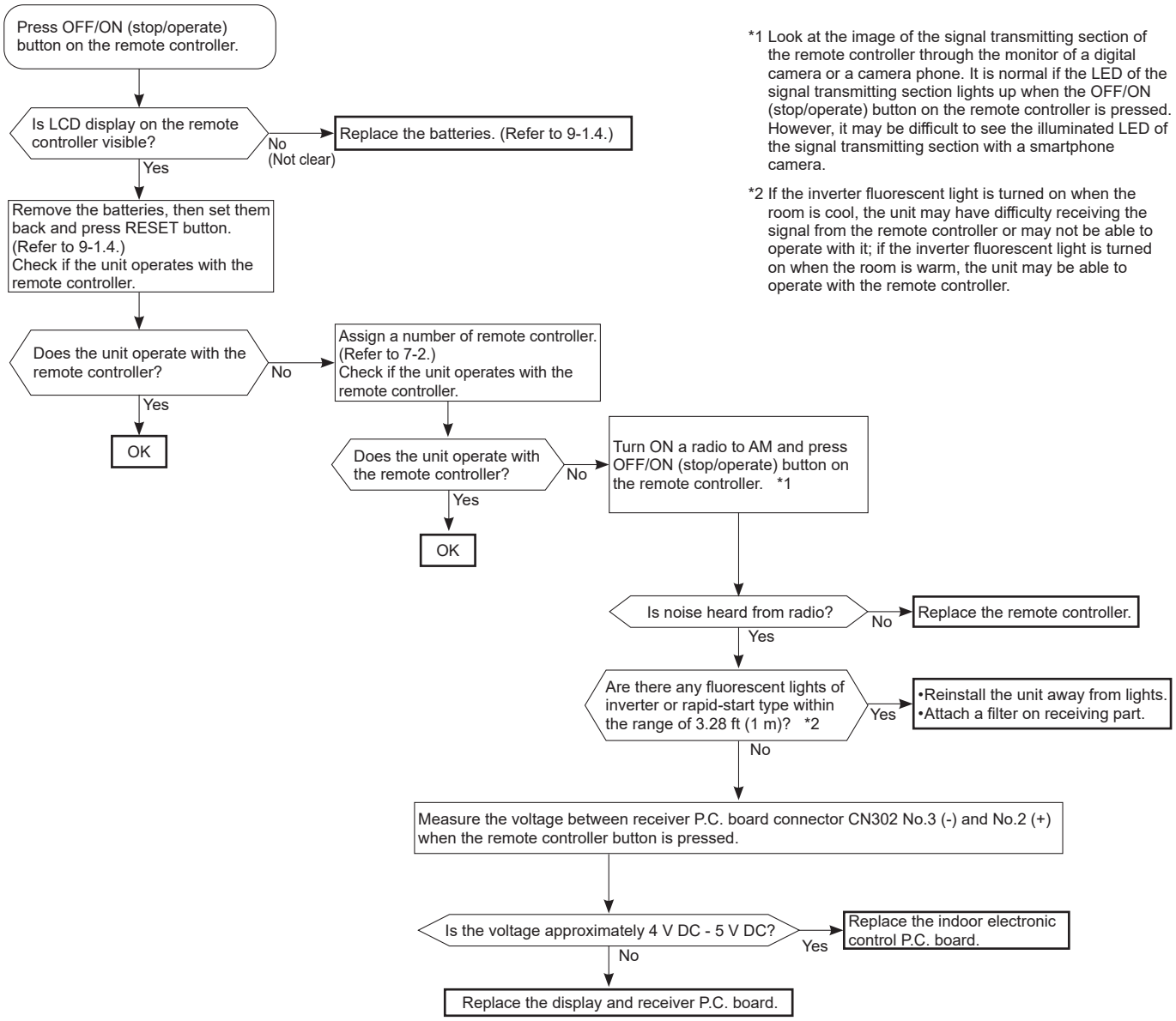

*1 Look at the image of the signal transmitting section of the remote controller through the monitor of a digital camera or a camera phone. It is normal if the LED of the signal transmitting section lights up when the OFF/ON (stop/operate) button on the remote controller is pressed. However, it may be difficult to see the illuminated LED of the signal transmitting section with a smartphone camera.

*2 If the inverter fluorescent light is turned on when the room is cool, the unit may have difficulty receiving the signal from the remote controller or may not be able to operate with it; if the inverter fluorescent light is turned on when the room is warm, the unit may be able to operate with the remote controller.

Ⓒ Check of indoor P.C. board and indoor fan motor

Turn OFF the power supply.
Remove indoor fan motor connector CN211 from indoor power P.C. board and vane motor connector CN151 from the indoor electronic control P.C. board and turn ON the power supply.

Does the unit operate with the remote controller?
Does the operation indicator lamp light up by pressing the emergency operation switch?

Yes →
- Measure the resistance between CN211 ③ and ④ of the indoor fan motor connector. → Short circuit: Replace the indoor fan motor.
- Measure the resistance of the vane motor coil. Refer to 9-5. → Short circuit: Replace the vane motor and the indoor electronic control P.C. board.
- Measure the resistance of the i-see SENSOR MOTOR coil. Refer 9-5. → Short circuit Replace the i-see SENSOR MOTOR and the indoor electronic P.C. board.

No ↓

Turn OFF the power supply.
Check both "parts side" and "pattern side" of the indoor power P.C. board visually.

Are the varistor (NR11) burnt and the fuse (F11) blown?
- Yes → Replace the varistor (NR11) and fuse (F11). *3
- No

Be sure to check both the fuse and the varistor in any case.

Is the fuse (F11) blown only?
- No
- Yes ↓

Measure the resistance between CN211 ①(+) and ③(-) of indoor fan motor connector. *1, *2

Is the resistance 1 MΩ or more?
- No → Replace the fuse (F11) and the indoor fan motor. *3
- Yes → Replace the fuse (F11). *3

*1. The fan motor connector's ① lead wire is red, whereas ③ is black.
*2. Connect "+" of the multimeter to fan motor connector's ① lead wire, and "-" to ③ lead wire, otherwise the resistance cannot be measured properly.
*3. Please replace the fuse after removing the indoor power P.C. board from the electrical box.

Measure the resistance of resistor (R111) on the indoor power P.C. board.

Is the resistance of resistor (R111) approximately 2Ω?
- No → Replace the indoor power P.C. board and the indoor fan motor.
- Yes ↓

Is there approximately 5 V DC between 5 V (+) and GND (-) of the indoor electronic control P.C. board?
Is there approximately 12 V DC between CN2T1 ② (+) and GND (-) of the indoor electronic control P.C. board?
- Yes → Replace the indoor fan motor.
- No ↓

Are connector CN102 on the indoor electronic control P.C. board or lead wires disconnected?
- Yes → Connect the connector or repair disconnection.
- No ↓

Replace the indoor electronic control P.C. board.

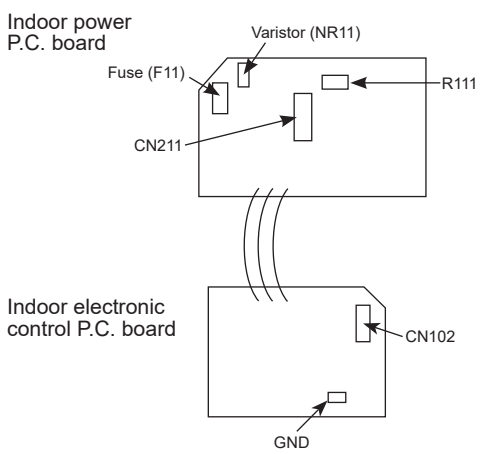

Ⓓ How to check miswiring and serial signal error

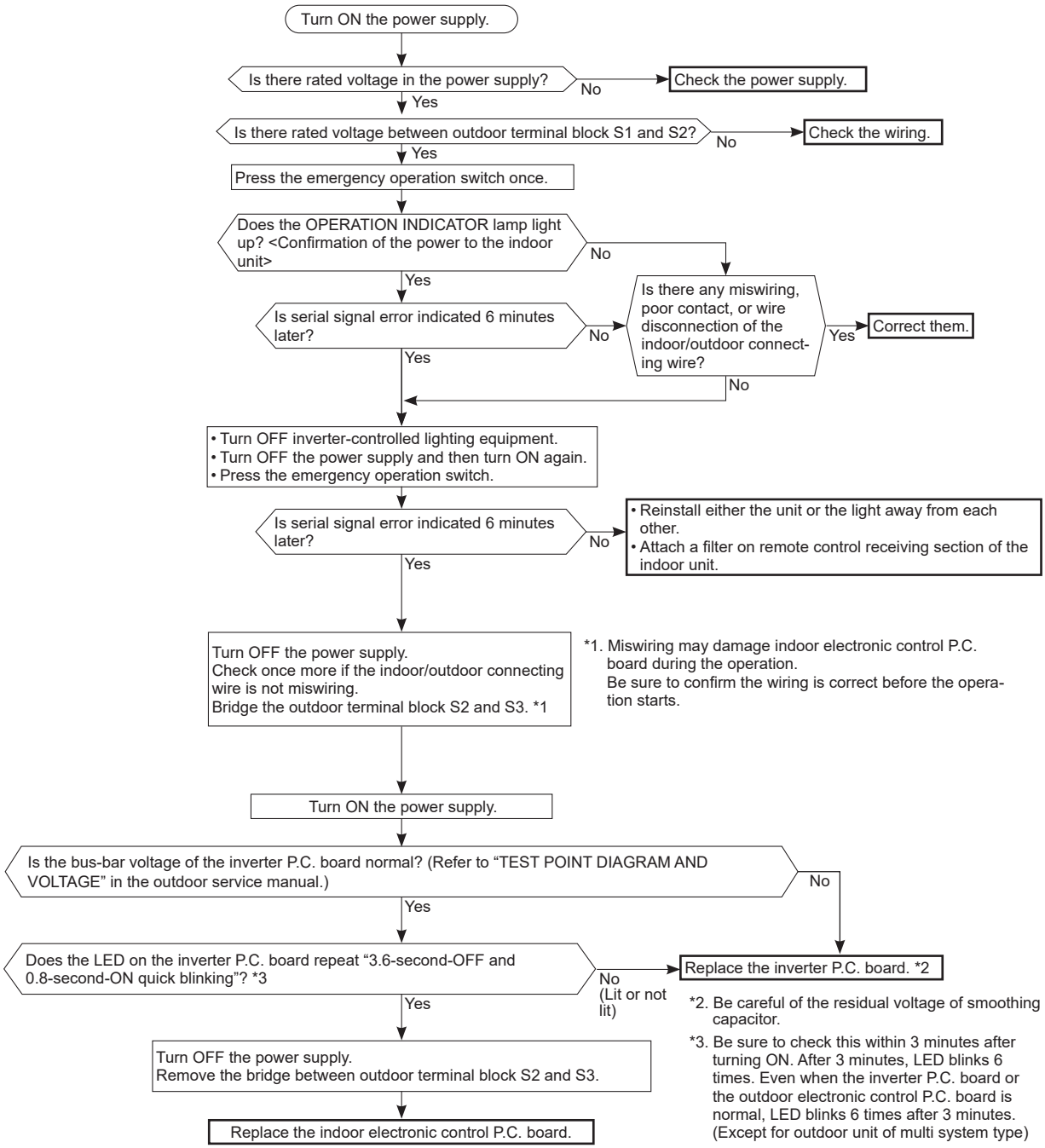

Ⓔ Electromagnetic noise enters into TV sets or radios

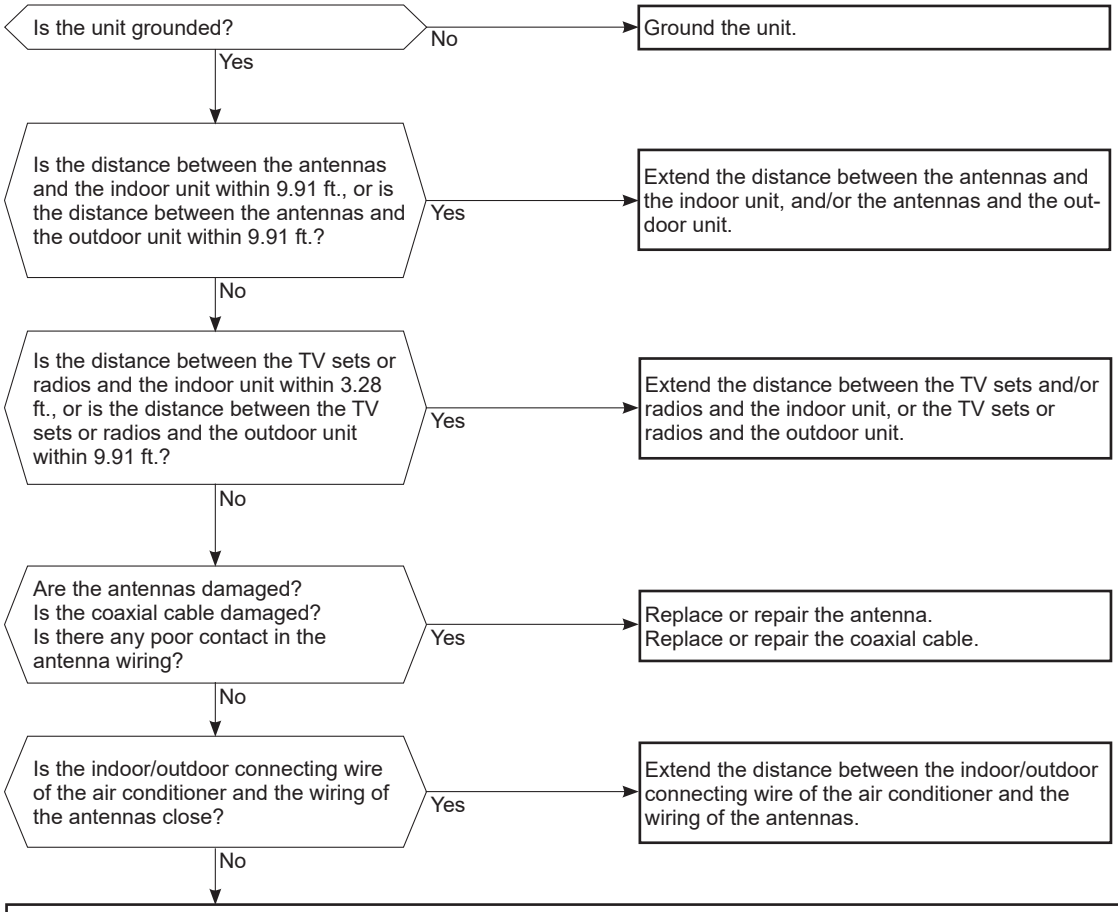

Even if all of the above conditions are fulfilled, the electromagnetic noise may enter, depending on the electric field strength or the installation condition (combination of specific conditions such as antennas or wiring).
Check the followings before asking for service.

1. Devices affected by the electromagnetic noise
   TV sets, radios (FM/AM broadcast, shortwave)
2. Channel, frequency, broadcast station affected by the electromagnetic noise
3. Channel, frequency, broadcast station unaffected by the electromagnetic noise
4. Layout of ;
   indoor/outdoor unit of the air conditioner, indoor/outdoor wiring, grounding wire, antennas, wiring from antennas, receiver
5. Electric field intensity of the broadcast station affected by the electromagnetic noise
6. Presence or absence of amplifier such as booster
7. Operation condition of air conditioner when the electromagnetic noise enters in
   1) Turn OFF the power supply once, and then turn ON the power supply. In this situation, check for the electromagnetic noise.
   2) Within 3 minutes after turning ON the power supply, press OFF/ON (stop/operate) button on the remote controller for power ON, and check for the electromagnetic noise.
   3) After a short time (3 minutes later after turning ON), the outdoor unit starts running. During operation, check for the electromagnetic noise.
   4) Press OFF/ON (stop/operate) button on the remote controller for power OFF, when the outdoor unit stops but the indoor/outdoor communication still runs on. In this situation, check for the electromagnetic noise.

9-7. TEST POINT DIAGRAM AND VOLTAGE

Indoor power P.C. board, Indoor electronic control P.C. board, Display and receiver P.C. board, Switch buzzer P.C. board

MSZ-FX06NL MSZ-FX09NL MSZ-FX12NL
MSZ-FX15NL MSZ-FX18NL MSZ-FX24NL

Indoor power P.C. board

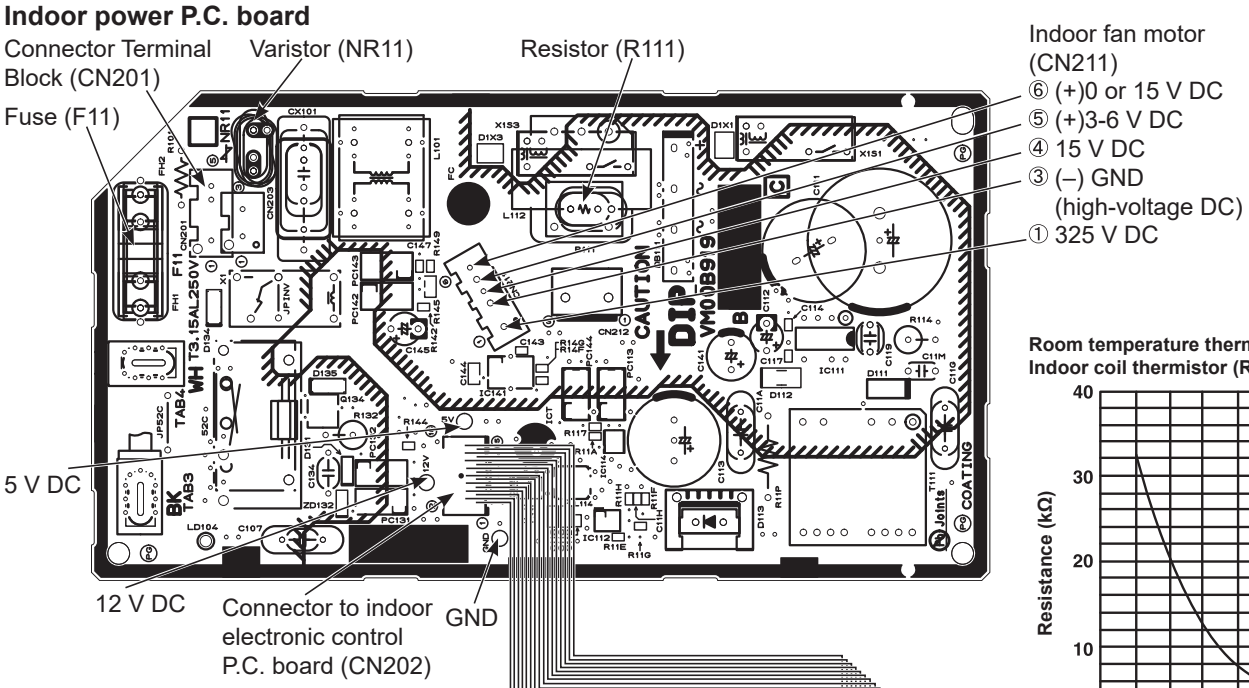

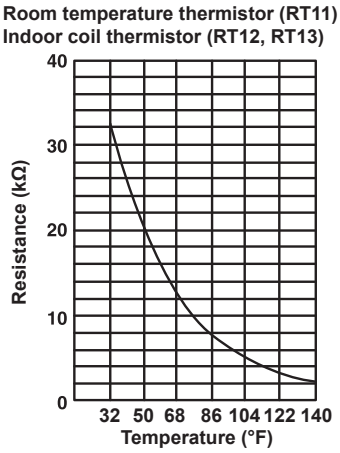

Indoor electronic control P.C. board

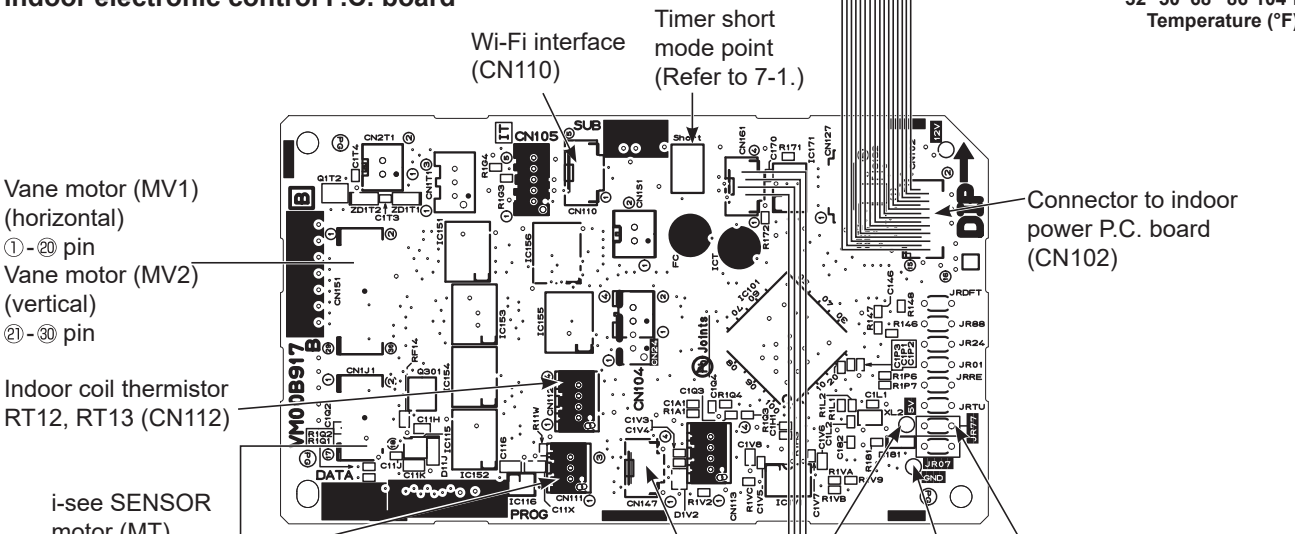

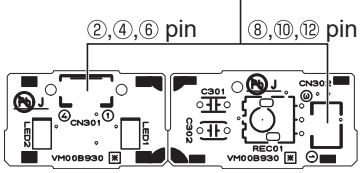

Display and receiver P.C. board

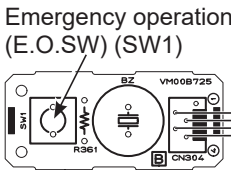

Switch buzzer P.C. board

10 DISASSEMBLY INSTRUCTIONS

<Detaching method of the terminal with locking mechanism>

The terminal which has the locking mechanism can be detached as shown below.
There are 2 types of the terminal with locking mechanism.
The terminal without locking mechanism can be detached by pulling it out.
Check the shape of the terminal before detaching.

(1) Slide the sleeve and check if there is a locking lever or not.

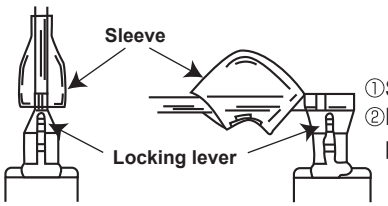

①Slide the sleeve.
②Pull the terminal while pushing the locking lever.

(2) The terminal with the connector shown below has the locking mechanism.

①Hold the sleeve, and pull out the terminal slowly.

MSZ-FX06NL MSZ-FX09NL MSZ-FX12NL
MSZ-FX15NL MSZ-FX18NL MSZ-FX24NL

NOTE: Turn OFF the power supply before disassembly.

→: Indicates the visible parts in the photos/figures.
- - →: Indicates the invisible parts in the photos/figures.

OPERATING PROCEDURE	PHOTOS/FIGURES
1. Removing the front panel and the panels (U/R/L/F) and horizontal vanes (upper R/L), (lower R/L) **Removing the front panel (Photos 1, 2)** (1) Lift the front panel until a “click” is heard. (2) Hold the hinges and pull to remove the front panel. **Removing the horizontal vanes (upper R/L), (lower R/L)(Photo 3)** (1) Unlock the rocks of the horizontal vane upper (R)(2 points). Pull and remove the horizontal vane upper (R) to the side. (2) Remove the horizontal vane upper (L) and horizontal vane lower (R) (L) by the same procedure.	**Photo 1** 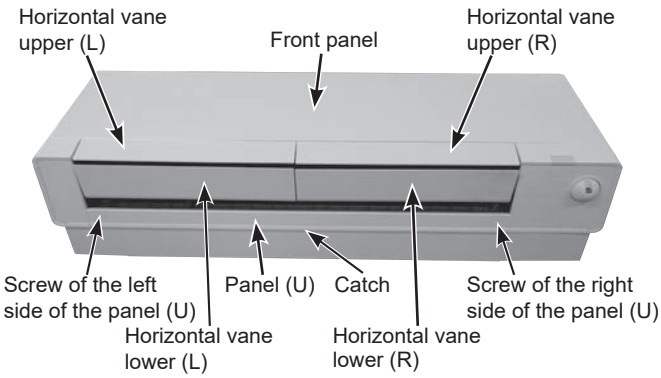 **Photo 2** 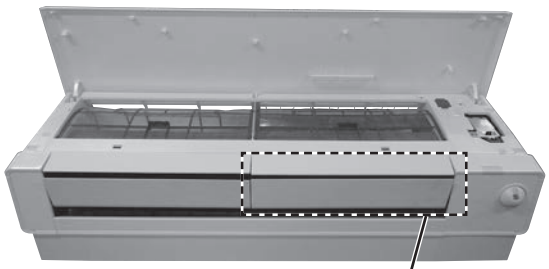 **Photo 3** 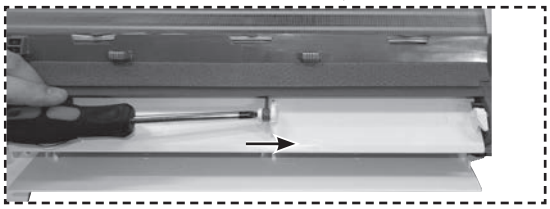

OPERATING PROCEDURE	PHOTOS/FIGURES

How to install the front panel (Photos 1, 2)
(1) Attach the horizontal vanes (upper R/L) and (lower R/L)
(2) Install the front panel to the indoor unit.
(3) Push the locations indicated by the arrows firmly to close the front panel (Figure 1).

Removing the panel (U) (Photo 4)
(1) Remove the front panel.
(2) Remove the horizontal vanes (upper R/L), (lower R/L), and the right and left corner boxes.
(3) Remove the 2 screw caps on the right and left sides of the panel (U), and remove the 2 screws.
(4) Disengage the catch on the center of the panel (U), and pull it toward you to remove.

How to install the panel (U) (Photo 4)
(1) Press the center of the panel (U) from the front to snap into place.
(2) Install the 2 screws in the right and left sides of the panel (U), and cover them with 2 screw caps.

Removing the panel (R) (Photo 4)
(1) Remove the front panel, the horizontal vanes (upper R/L), (lower R/L), and the corner boxes (R) (L).
(2) Remove the panel (U).
(3) Remove the 3 screws of the panel (R), and pull the top of the panel (R) toward you to remove.

How to install the panel (R) (Photo 4)
(1) Install the panel (R) from the bottom to the top.
(2) Install the 3 screws in the panel (R).

Removing the panel (L) (Photo 4)
(1) Remove the front panel, the horizontal vanes (upper R/L), (lower R/L), and the corner boxes (R) (L).
(2) Remove the panel (U).
(3) Remove the screw of the panel (L), and pull the top of the panel (L) toward you to remove.

How to install the panel (L) (Photo 4)
(1) Install the panel (L) from the bottom to the top.
(2) Install the screw in the panel (L).

Removing the panel (F) (Photo 4)
(1) Remove the front panel, the horizontal vanes (upper R/L), (lower R/L), and the corner boxes (R) (L).
(2) Remove the panels (U) (R) (L).
(3) Remove the Wi-Fi assembly on the right side of the panel (F). Pull out its cable (Refer to section 5).
(4) Remove the panel (F) from the bottom to the top.

How to install the panel (F)
(1) Install the panel (F) from the top to the bottom.
(2) Install the Wi-Fi assembly.

Figure 1

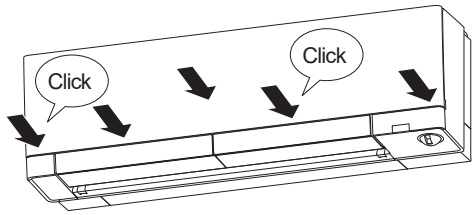

Photo 4

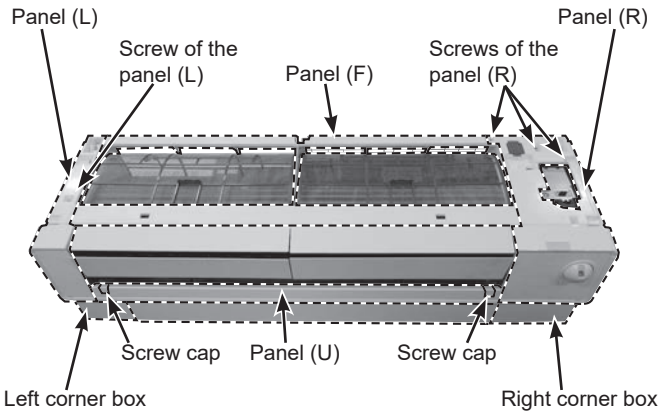

OPERATING PROCEDURE	PHOTOS/FIGURES
2. Removing the indoor electrical box (Photos 5, 6, 7, 8) (1) Remove the front panel, the horizontal vanes (uppler R/L), (lower R/L), the corner boxes (R) (L), and the panels (U) (R) (refer to section 1). (2) Remove the screw of the V.A. clamp, and remove the V.A. clamp (Photo 5). (3) Disconnect the indoor/outdoor connecting wire from the terminal block. (4) Remove the screw of the electrical cover, and remove the electrical cover (Photo 6). (5) Remove the ground wire. (6) Disconnect the following connectors (Photo 8): <Indoor electronic control P.C. board> CN1J1 (Display and i-see sensor assembly) CN147 [Refrigerant sensor (option)] **(MSZ-FX06/09/12/15/18NL)** (7) Remove the display and i-see sensor assembly, and refrigerant sensor assembly (Photo 7). (8) Disconnect the following connector (Photo 8): <Indoor electronic control P.C. board> CN110 (Wi-Fi assembly) CN161 (Switch buzzer P.C. board) CN211 (Indoor fan motor) CN151 (Vane motors) CN112 (Indoor coil thermistor) (9) Remove the screw of the electrical box. (10) Remove the electrical box.	**Photo 5** 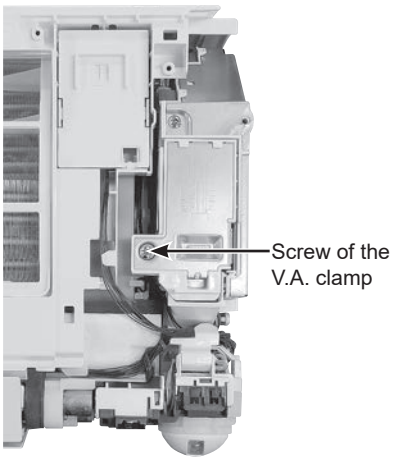 **Photo 6** 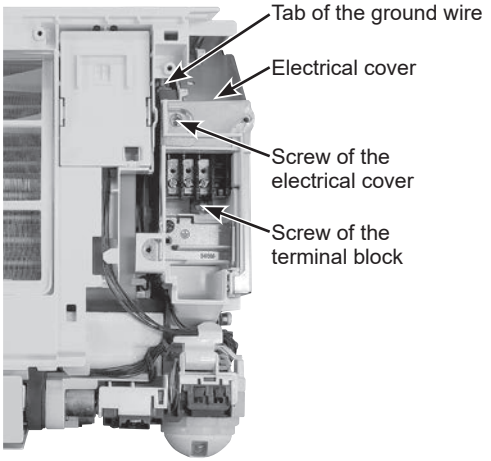 **Photo 7** 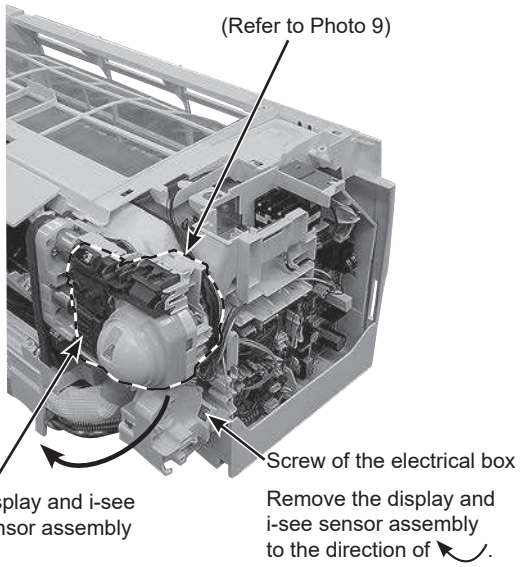

OPERATING PROCEDURE	PHOTOS/FIGURES
3. Removing the indoor electronic control P.C. board, the indoor power P.C. board, the indoor terminal block, and the room temperature thermistor (1) Remove the electrical box (Refer to section 2). **Removing the indoor terminal block (Photos 6, 8)** (2) Remove the screw of the terminal block. (Photo 6) (3) Disconnect the connectors of the indoor terminal block (TAB3 and CN201). **Removing the indoor electronic control P.C. board and the indoor power P.C. board (Photo 8)** (2) Disconnect all the connectors on the indoor electronic control P.C. board and the indoor power P.C. board. (3) Remove the indoor electronic control P.C. board and the indoor power P.C. board. **Removing the room temperature thermistor (Photo 8)** (2) Disconnect the following connector: CN111 (Room temperature thermistor) (3) Remove the room temperature thermistor.	**Photo 8 (Enlarged view of the indoor electronic control P.C. board)** 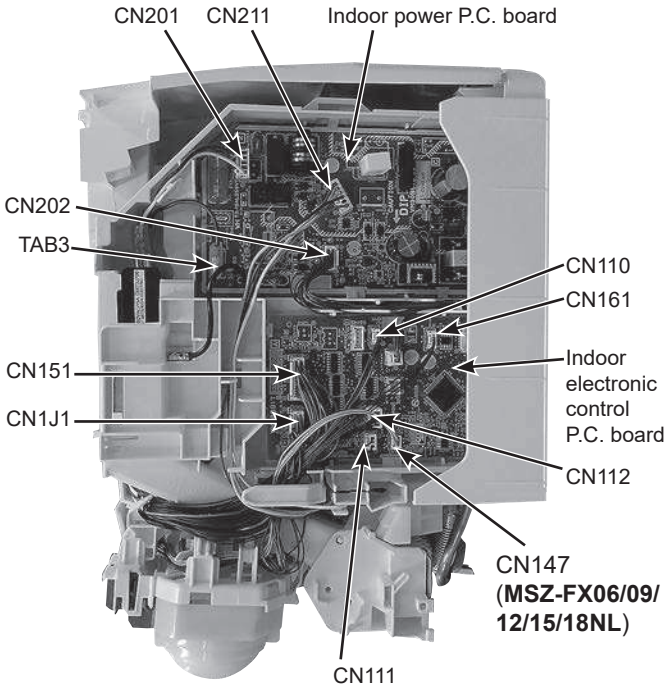

OPERATING PROCEDURE	PHOTOS/FIGURES
4. Removing the display and i-see sensor assembly, the refrigerant sensor assembly (option), the display P.C. board, and the receiver P.C. board (Photo 9). (1) Remove the display and i-see sensor assembly, and refrigerant sensor assembly (Refer to section 2). (2) Cut off the cable tie of the lead wires of the display and i-see sensor assembly at the back side of the display cover (Photo 9-2). (3) Remove the lead wires of the display and i-see sensor assembly from the hooks (Photo 9-2). (4) Disengage the 3 catches of the display cover, and remove the display cover (Photo 9-1, 2). (5) Remove the display P.C. board and receiver P.C. board (Photo 9-3).	**Photo 9** (Details of the display and i-see sensor assembly, refrigerant sensor assembly, and board in the display cover)

Photo 9-1

Front view of display and i-see sensor assembly, and the refregirant sensor assembly (option)

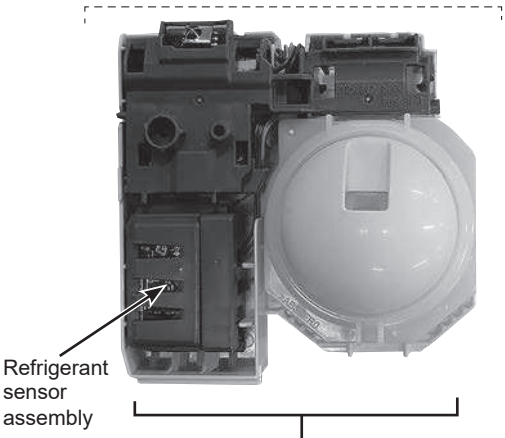

Photo 9-2

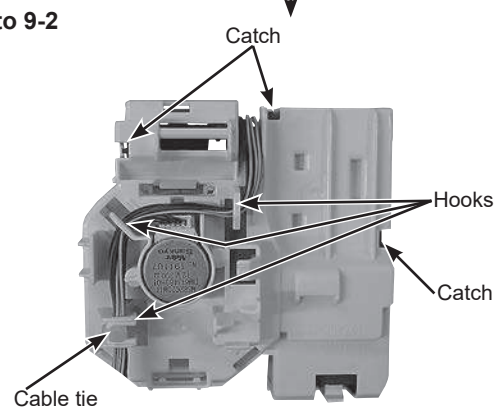

Back side view of display and i-see sensor assembly

Photo 9-3

Exploded view of display cover, display and i-see sensor assembly (display P.C. board, receiver P.C. board), and refrigerant sensor assembly.

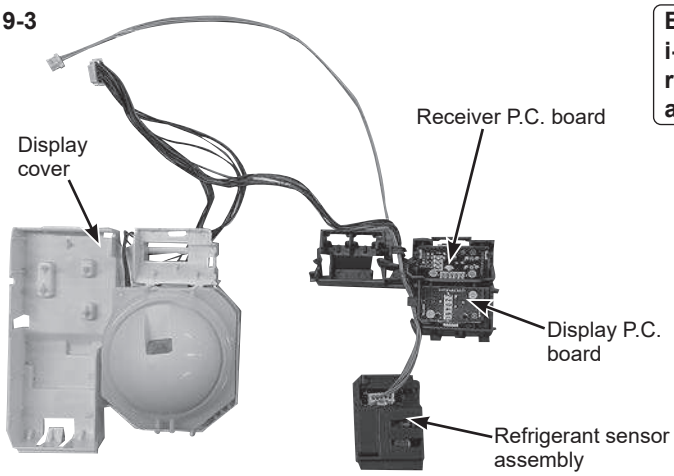

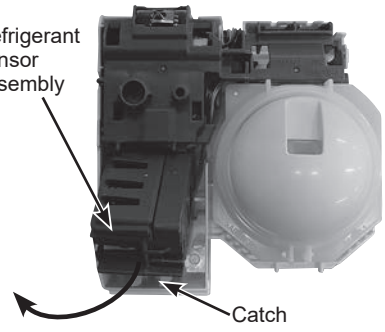

OPERATING PROCEDURE	PHOTOS/FIGURES

(6) Disengage the catches of the display cover, remove the refrigerant sensor assembly (option) from the display cover (Photo 9-3).
(7) Disengage the catch of the refrigerant sensor cover (Photo 9-4).
(8) Disconnect the connector of the refrigerant sensor (Photo 9-4).

NOTE: For the refrigerant sensor, replace the refrigerant sensor assembly.

How to install the refrigerant sensor
(1) Connect the lead wire to the refrigerant sensor. (Figure 2)
(2) Push the lead wire into the slit so that the refrigerant sensor does not press it.
(3) Install the refrigerant sensor assembly as shown in the Photo 10.

Photo 9-4

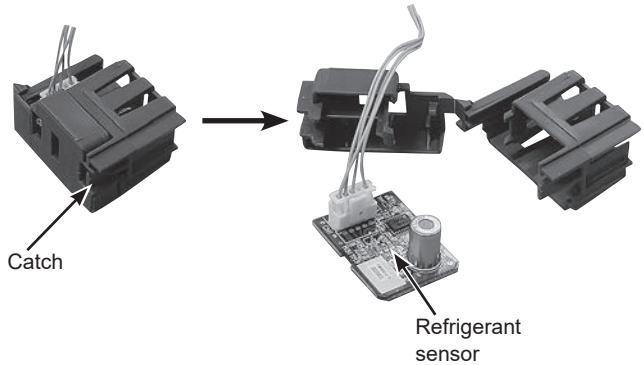

Figure 2

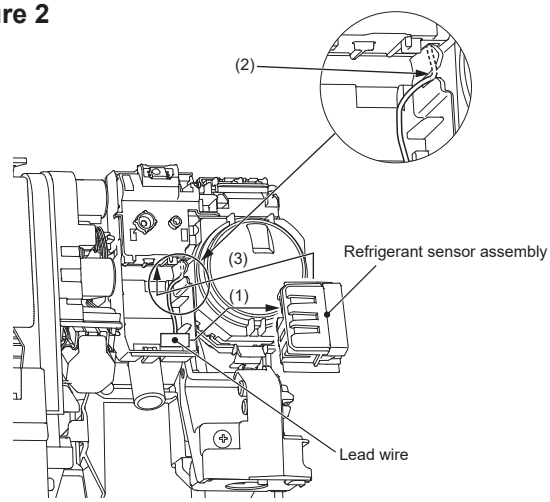

Photo 10

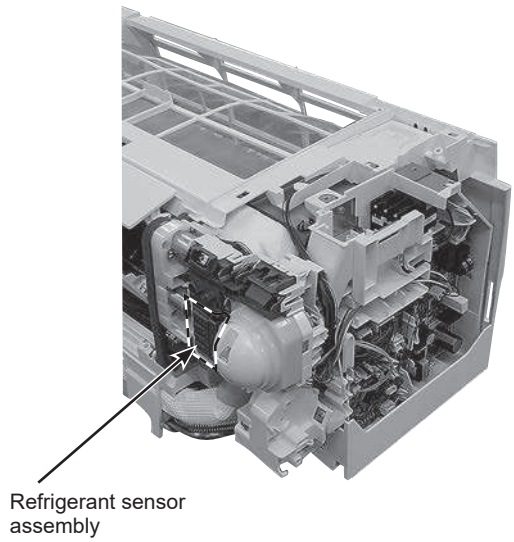

OPERATING PROCEDURE	PHOTOS/FIGURES

5. Removing the Wi-Fi assembly (Photos 3, 11)

(1) Remove the front panel, horizontal vanes (upper R/L), (lower R/L), corner boxes (R) (L), and the panels (U) (R).

(2)Remove the indoor/outdoor connecting wire and electrical cover. (Refer to section 2)

(3) Disconnect the following connector (Photo 8):
<Indoor electronic control P.C. board>
CN110 (Wi-Fi assembly)
CN161 (Switch buzzer P.C. board)

(4) Remove the cable of Wi-Fi assembly from the PANEL(F).

(5) Disengage the catch and remove the Wi-Fi assembly.

How to install the Wi-Fi assembly (Photos 11, 12)

(1) Attach the Wi-Fi assembly.
(2) Hook the cable of Wi-Fi assembly to the PANEL(F).
(3) Connect the connector of CN110 (Wi-Fi assembly) and CN161 (Switch buzzer P.C. board) to the indoor electronic control P.C. board.
(4) Install the electrical cover, and install the screw in the electrical cover.
(5) Install the V.A. clamp, and install the screw in the V.A. clamp.
(6) Install the panel (R) (U).
(7) Install the corner boxes (R) (L), and horizontal vanes (upper R/L), (lower R/L).
(8) Install the front panel.

Photo 11

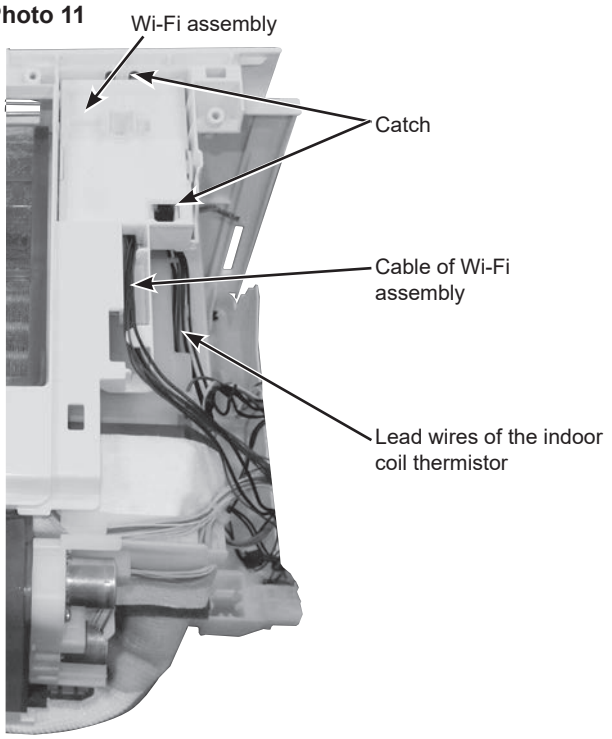

Photo 12

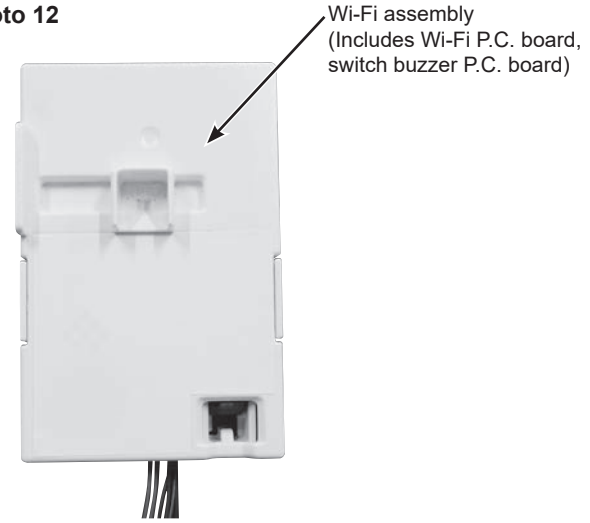

OPERATING PROCEDURE	PHOTOS/FIGURES

6. Removing the horizontal vanes (R)(L) and the horizontal vane motors (R)(L) (Photos 8, 13, 14, 15)

(1) Remove the front panel, horizontal vanes (upper R/L), (lower R/L), the corner boxes (R) (L), the panels (U) (R) (L), V.A. clamp, the electrical cover, Wi-Fi assembly, the panel (F), and display and i-see sensor assembly.
(2) Remove the following connector (Photo 8):
<Indoor electronic control P.C. board>
CN151 (Vane motors)
(3) Pull out the drain hose from the nozzle assembly.
(4) Pull and remove the nozzle assembly (4 catches) (Photo 13).
(5) Cut off the cable tie to secure the lead wires on the right side of the nozzle assembly (Photo 14).

Removing horizontal vane motors (R) (Photo 14)

(6) Loosen the lead wires, and disconnect the connector of the horizontal vane motors (R).
(7) Remove the 2 screws of the horizontal vane motors (R).
(8) Remove the horizontal vane motors (R).

Removing horizontal vane motors (L) (Photo 15)

(9) Loosen the lead wires, and disconnect the connector of the horizontal vane motors (L).
(10) Remove the 2 screws of the horizontal vane motors (L).
(11) Remove the horizontal vane motors (L).

Photo 13

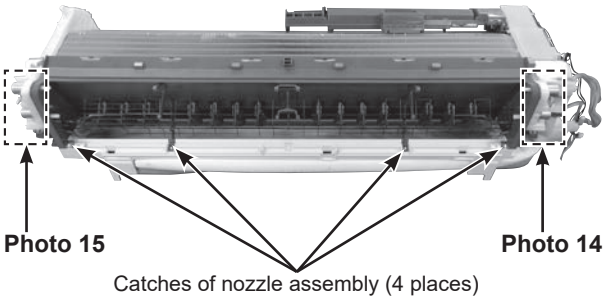

Photo 14

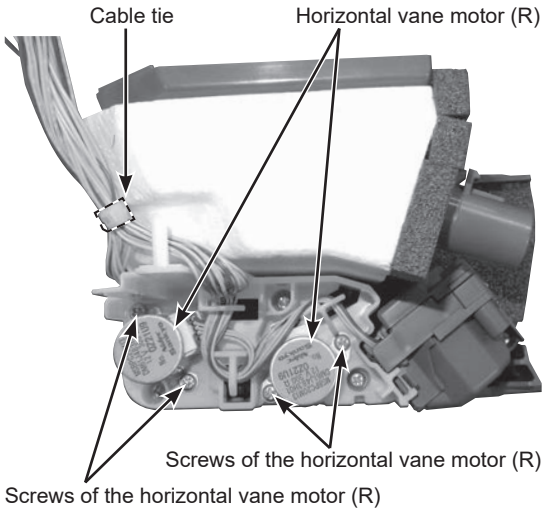

Photo 15

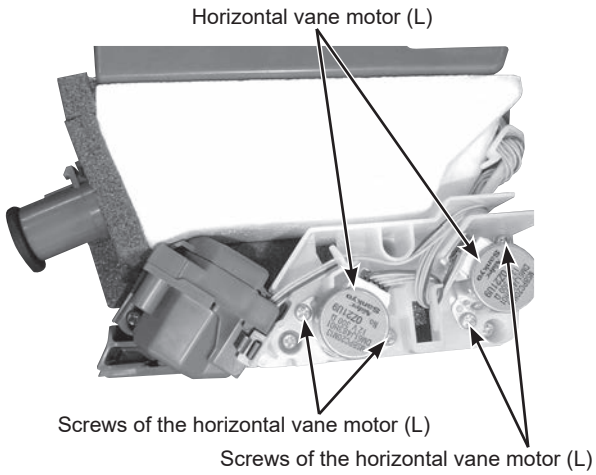

OPERATING PROCEDURE	PHOTOS/FIGURES

7. Removing the vertical vane motor units (R) (L) and the vertical vane motors (R) (L)

(1) Remove the front panel, horizontal vanes (upper R/L) (lower R/L), the corner boxes (R) (L), the panels (U) (R) (L), V.A. clamp, the electrical cover, Wi-Fi assembly, the panel (F), and display and i-see sensor assembly.

(2) Remove the following connector (Photo 8):
<Indoor electronic control P.C. board>
CN151 (Vane motors)

(3) Pull out the drain hose from the nozzle assembly. Pull and remove the nozzle assembly (4 catches) (Photo 13).

(4) Cut off the cable tie to secure the lead wires on the right side of the nozzle assembly (Photo 16).

Removing the horizontal vane motor unit (R) and the vertical vane motor (R) (Photos 16, 17)

(5) Remove the 3 screws of the horizontal motor unit (R) indicated in (Photo 16), and remove the lead wires of the vane motors (R).

(6) Disengage the catch of the horizontal vane motor unit (R), and remove the horizontal vane motor unit (R) (Photo 16).

(7) Disengage the link of the vertical vane motor unit (R).

(8) Disengage the catch of the vertical vane motor unit (R), and remove the vertical vane motor (R) from the vertical vane motor unit (R), (Photo 17-1).

Photo 16

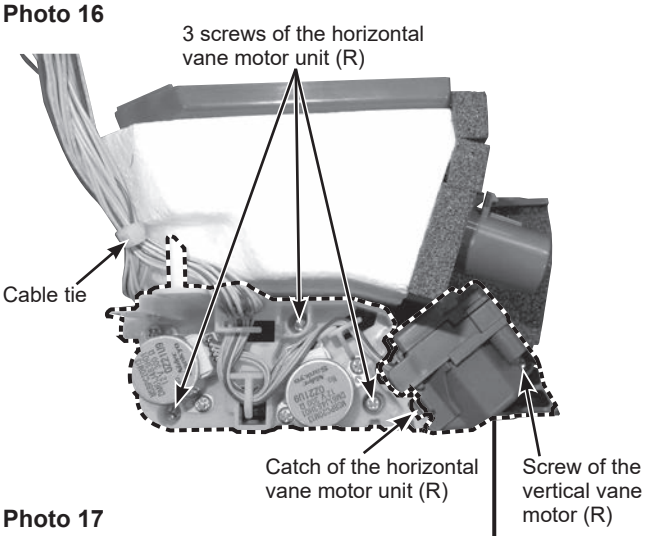

Photo 17

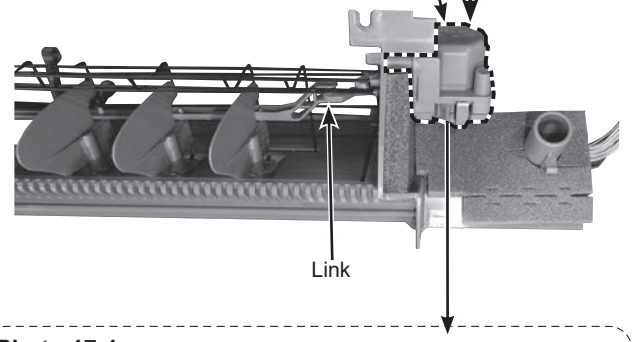

Photo 17-1

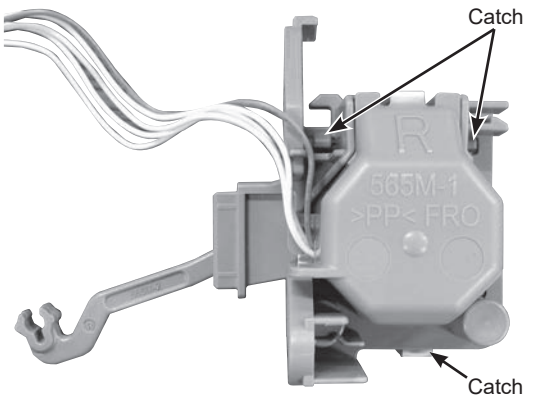

OPERATING PROCEDURE	PHOTOS/FIGURES

Removing the horizontal vane motor unit (L) and the vane motor (L) (vertical) (Photos 18, 19)

(9) Remove the 3 screws of the horizontal motor unit (L) indicated in (Photo 18).

(10) Disengage the catch of the horizontal vane motor unit (L), and remove the horizontal vane motor unit (L). (Photo 18)

(11) Disengage the link of the vertical vane motor unit (L) (Photo 19-1).

(12) Disengage the catch of the vertical vane motor unit (L), and remove the vertical vane motor (L) from the vertical vane motor unit (L), (Photo 19-1).

Photo 18

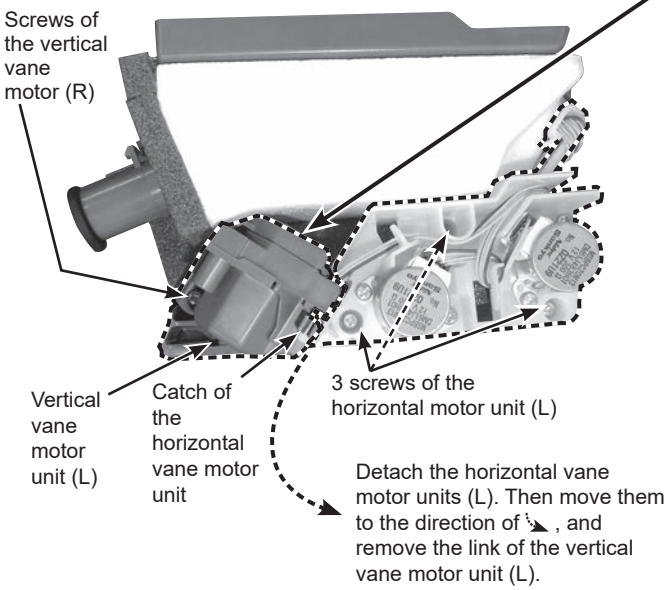

Photo 19

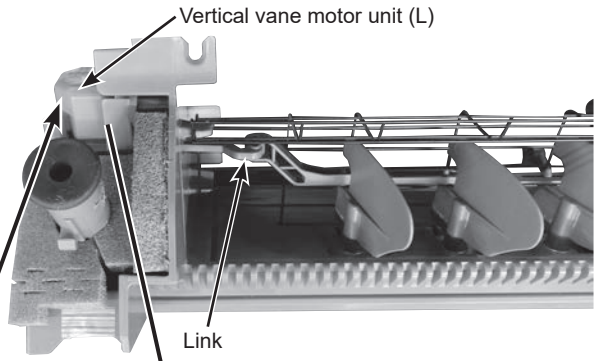

Photo 19-1

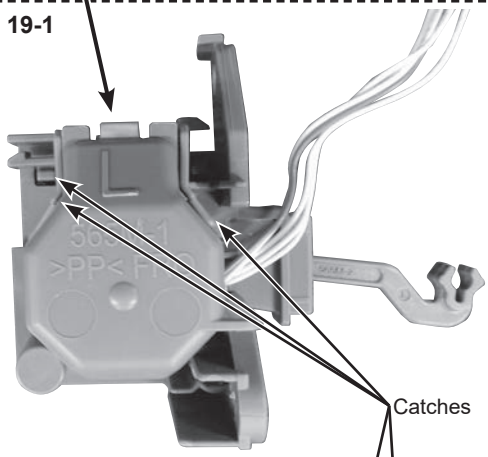

Photo 19-2

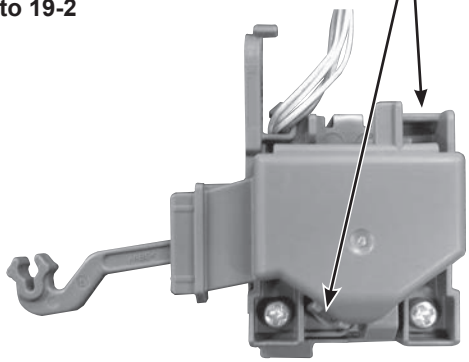

OPERATING PROCEDURE

8. Removing the line flow fan, the indoor fan motor assembly, the indoor coil thermistor, and the heat exchanger (Photos 20, 21, 22, 23, 24)

(1) Remove the front panel, the horizontal vanes (upper R/L), (lower R/L), the corner boxes (R) (L), the panels (U) (R) (L) ,Wi-Fi assembly, the panel (F), the electrical box and the nozzle assembly.

(2) Loosen the screw inside the right side of the line flow fan (Photo 21).

(3) Remove the 3 screws of the fan motor assembly. Pull the fan motor assembly slightly toward you, and remove it by pulling to the right (Photo 22).

(4) Remove the indoor coil thermistor from the heat exchanger.

(5) Remove the 2 screws of the hairpin holder on the left side of the heat exchanger. Raise the left side of the heat exchanger, and pull the line flow fan to the lower left to remove (Photo 23).

(6) Disengage the 2 catches on the right side of the heat exchanger, and remove the heat exchanger (Photo 24).

* When attaching the line flow fan, screw the line flow fan so 4 mm gap is provided between the right end of the line flow fan and the right wall of the air passage of the box (Figure 3).

Figure 3

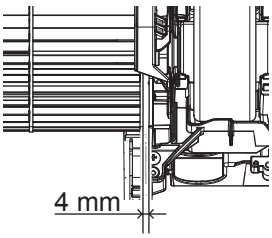

PHOTOS/FIGURES

Photo 20

NOTE:
Install the fan motor and lead wires in the former position when assembling the fan motor. (Photo 20)

Photo 21

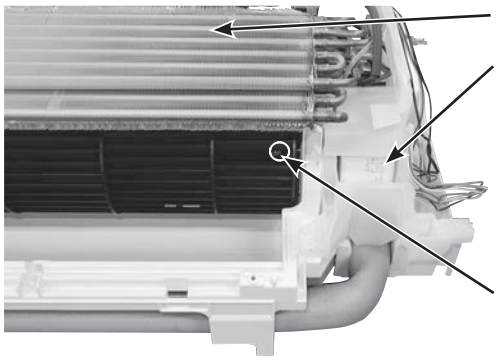

Photo 23

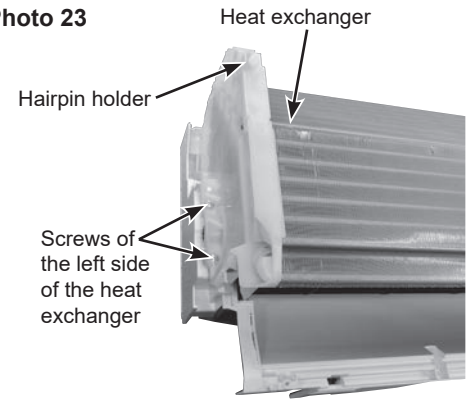

Photo 22

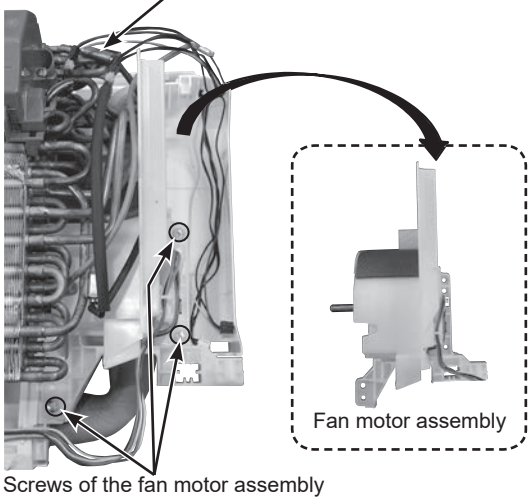

Photo 24

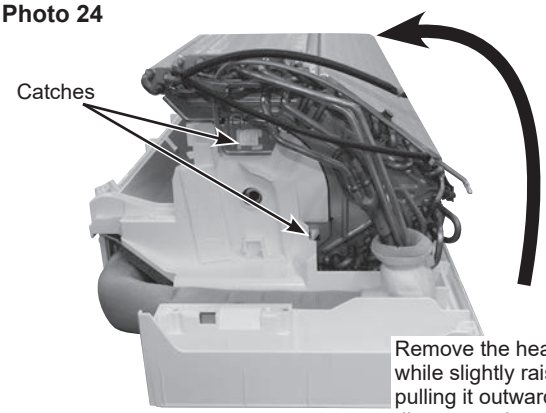

Remove the heat exchanger while slightly raising and pulling it outward to disengage the catches.

Fixing the indoor coil thermistor

*There are 2 forms of parts for fixing the indoor coil thermistor.

Clip shape

Holder shape

When fixing the indoor coil thermistor to the clip-shape/holder-shape part, the lead wire should point down.

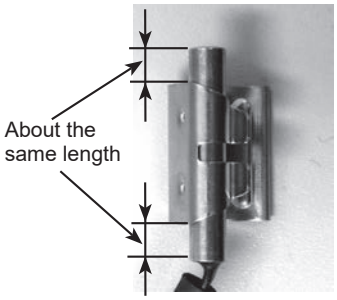

Position and procedure for mounting the clip-shape part

1. Set the indoor coil thermistor in the center of the clip-shape part.

2. Check the (marked) mounting position.

3. Mount the clip-shape part.

NOTE:
- Take care to avoid loss and accidental falling of the clip-shape part inside the unit.
- Mount the clip-shape part on the marked position.
- Do not pull the lead wire when removing the indoor coil thermistor.

MITSUBISHI ELECTRIC CORPORATION

HEAD OFFICE: TOKYO BUILDING, 2-7-3, MARUNOUCHI, CHIYODA-KU, TOKYO 100-8310, JAPAN

© Copyright 2024 MITSUBISHI ELECTRIC CORPORATION
Issued: Jan. 2025. No. OBH945 REVISED EDITION-B
Issued: Nov. 2024. No. OBH945 REVISED EDITION-A
Published: Sep. 2024. No. OBH945
Made in Japan

Specifications subject to change without notice.