MSZ-GX18NL
18,000 BTU/H WALL-MOUNTED INDOOR UNIT

Job Name:			
System Reference:		**Date:**	

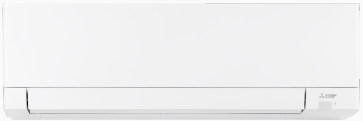

GENERAL FEATURES

- Dual Barrier Coating: Dual Barrier Coating reduces the collection of contaminants like dust, fibers, smoke, and oil on the inner surface of the indoor unit.
- Swing Mode: An indoor unit with this capability can move air throughout the room like an oscillating fan.
- Econo Cool: Econo Cool is feature that temporarily adjusts the airflow to maintain comfort while using less energy.
- Quiet: Our indoor units offer whisper-quiet operation as low as 19 dB(A). Our outdoor units are design for ultra quiet operation.
- Horizontal Vane Control: Horizontal Vane Control allows the indoor unit vanes to be moved left right to provide even temperatures throughout a space.
- Wi-Fi Enabled: Wi-Fi enabled units pair with the Comfort app for complete control over temperature, fan speeds, modes, schedules, and more.

SPECIFICATIONS			SYSTEM
UNIT TYPE			MSZ-GX18NL
Cooling Capacity (Nominal)[1,3]	Cooling Capacity (Nominal)	Btu/h	18000
Heating Capacity (Nominal)[2,3]	Heating Capacity (Nominal)	Btu/h	21600
Electrical	Voltage, Phase, Frequency	V AC / V AC , ø , Hz	208 / 230 , 1 , 60
	Voltage: Indoor - Outdoor, S1-S2	V AC	208/230
Indoor Unit	MCA	A	1
	Fan Motor Type		DC Motor
	Fan Motor Output	W	56
	Airflow Rate at Cooling, Dry	CFM	324 , 392 , 454 , 530 , 650
	Airflow Rate at Cooling, Wet	CFM	292 , 353 , 408 , 477 , 585
	Airflow Rate at Heating, Dry	CFM	344 , 392 , 454 , 530 , 672
	Sound Pressure Level [Cooling]	dB (A)	28 , 33 , 38 , 44 , 49
	Sound Pressure Level [Heating]	dB (A)	29 , 34 , 39 , 43 , 48
	Dual Barrier Coating on Heat Exchanger		Yes
	Dual Barrier Coating on Fan		Yes
	External Finish Color		Munsell 0.7PB 9.2/0.4
	Unit Dimensions (W x D x H)	inch x inch x inch [mm x mm x mm]	43-5/16 x 10-1/8 x 12-13/16 [1100 x 257 x 325]
	Package Dimensions (W x D x H)	inch x inch x inch [mm x mm x mm]	45-1/2 x 15-1/2 x 13-1/2 [1160 x 400 x 340]
	Unit Weight	lbs [kg]	37 [16.50]
	Package Weight	lbs [kg]	42 [18.80]
Refrigerant	Type		R454B
Piping	Liquid Pipe Size O.D.	inch [mm]	1/4 [6.35]
	Gas Pipe Size O.D.	inch [mm]	1/2 [12.70]
Indoor Unit	Drain Pipe Size O.D.	inch [mm]	5/8 [16]

Notes

[1]Cooling (Indoor // Outdoor) °F 80 DB, 67 WB // 95 DB, 75 WB - test
[2]Heating at 47°F (Indoor // Outdoor) °F 70 DB, 60 WB // 47 DB, 43 WB
[3]Nominal capacity only. Actual capacity output varies based on the system specific configuration

© 2025 Mitsubishi Electric Trane HVAC US LLC. All rights reserved.

INDOOR UNIT ACCESSORIES: MSZ-GX18NL

Condensate	Sauermann Condensate Pump 120-230V up to 60k BTU/h	☐	SI30-230
	Blue Diamond (MaxiBlue Advanced) Mini Condensate Pump w/ Reservoir & Sensor (110V) up to 48,000 BTU/H [recommended]	☐	X87-711
	Drain Pan Level Sensor/Control	☐	SS610E
	Refco Condensate Pump 100-240V up to 120k BTU/h	☐	COMBI
	Blue Diamond MaxiBlue Condensate Pump with Reservoir Sensor 115-230V up to 48k BTU/h	☐	X88-721
	Blue Diamond MicroBlue Condensate Pump with Fascia Kit 115-230V up to 18k BTU/h	☐	X86-011
	Blue Diamond MegaBlue Condensate Pump with Reservoir Sensor 115-230V up to 170k BTU/h	☐	X87-835
	Blue Diamond Sensor Extension Cable 15 Ft	☐	C13-103
	Refco Condensate Removal Pump with Wall Mount Enclosure 120-240V up to 120k BTU/h	☐	GOBI-II
Control Interface	Airzone Wireless Think Controller Black	☐	AZZBSTHINKRN
	Airzone Wired Blueface Controller Black	☐	AZZBSBLUEZEROCN
	kumo station® for Comfort app	☐	PAC-WHS01HC-E
	IT Extender	☐	PAC-WHS01IE-E
	Wireless Interface 2 for Comfrot app	☐	PAC-USWHS002-WF-2
	Thermostat Interface for 3rd Party Thermostats	☐	PAC-US445CN-1
	M-Net I/O Control Interface for M-Series [2]	☐	MAC-334IF-E
	Airzone Wireless Think Controller White	☐	AZZBSTHINKRB
	Airzone Wireless Lite Controller White	☐	AZZBSLITERB
	Airzone Wireless Lite Controller Black	☐	AZZBSLITERN
	Procon BACnet® and Modbus® Interface	☐	PAC-UKPRC001-CN-1
	Airzone Wired Blueface Controller White	☐	AZZBSBLUEZEROCB
Disconnect Switch	(30A/600V/UL) [fits 2” X 4” utility box] - White	☐	TAZ-MS303W
	30A600VUL fits 2 X 4 utility box - Black	☐	TAZ-MS303
Drain Hose	Flexible Mini-Split Drain Hose	☐	DRX-16
Filter	Electro Static Anti-allergy Enzyme Filter	☐	MAC-2320FT-E
	Microparticle Filter	☐	MAC-EMF515FT-E
Lineset	1/4 x 1/2 Lineset Twin-Tube Insulation - 50 feet	☐	MLS141212T-50
	1/4 x 1/2 Lineset Twin-Tube Insulation - 30 feet	☐	MLS141212T-30
	1/4 x 1/2 Lineset Twin-Tube Insulation - 65 feet	☐	MLS141212T-65
	1/4 x 1/2 Lineset Twin-Tube Insulation - 100 feet	☐	MLS141212T-100
	1/4 x 1/2 Lineset Twin-Tube Insulation - 15 feet	☐	MLS141212T-15
N/A		☐	Unknown
Remote Sensor	Wireless temperature and humidity sensor for Comfort app	☐	PAC-USWHS003-TH-1
	Remote Temperature Sensor for MFZ MLZ and MSZ models	☐	M21EAA307
Terminal Signal Adapter	Backup Heat Relay Kit	☐	CN24RELAY-KIT-CM3
Wired Remote Controller	Simple MA Remote Controller [1]	☐	PAC-YT53CRAU-J
	Simple Direct Wired Remote Controller	☐	PAC-SDW01RC-1
	Touch MA Remote Controller [1]	☐	PAR-CT01MAU-SB
	Deluxe MA Wired Remote Controller [1]	☐	PAR-42MAAUB
Wireless Remote Controller	Lockdown Bracket for Wireless Handheld Remote Controllers	☐	RCMKP1CB
	Wireless RedLINK™ Remote Controller	☐	MHK2
Notes			

© 2025 Mitsubishi Electric Trane HVAC US LLC. All rights reserved.

INDOOR UNIT DIMENSIONS: MSZ-GX18NL

MSZ-GX18NL-U1 MSY-GX18NL-U1
MSZ-GX24NL-U1 MSY-GX24NL-U1
MSZ-GX30NL-U1 MSY-GX30NL-U1
MSZ-GX36NL-U1 MSY-GX36NL-U1

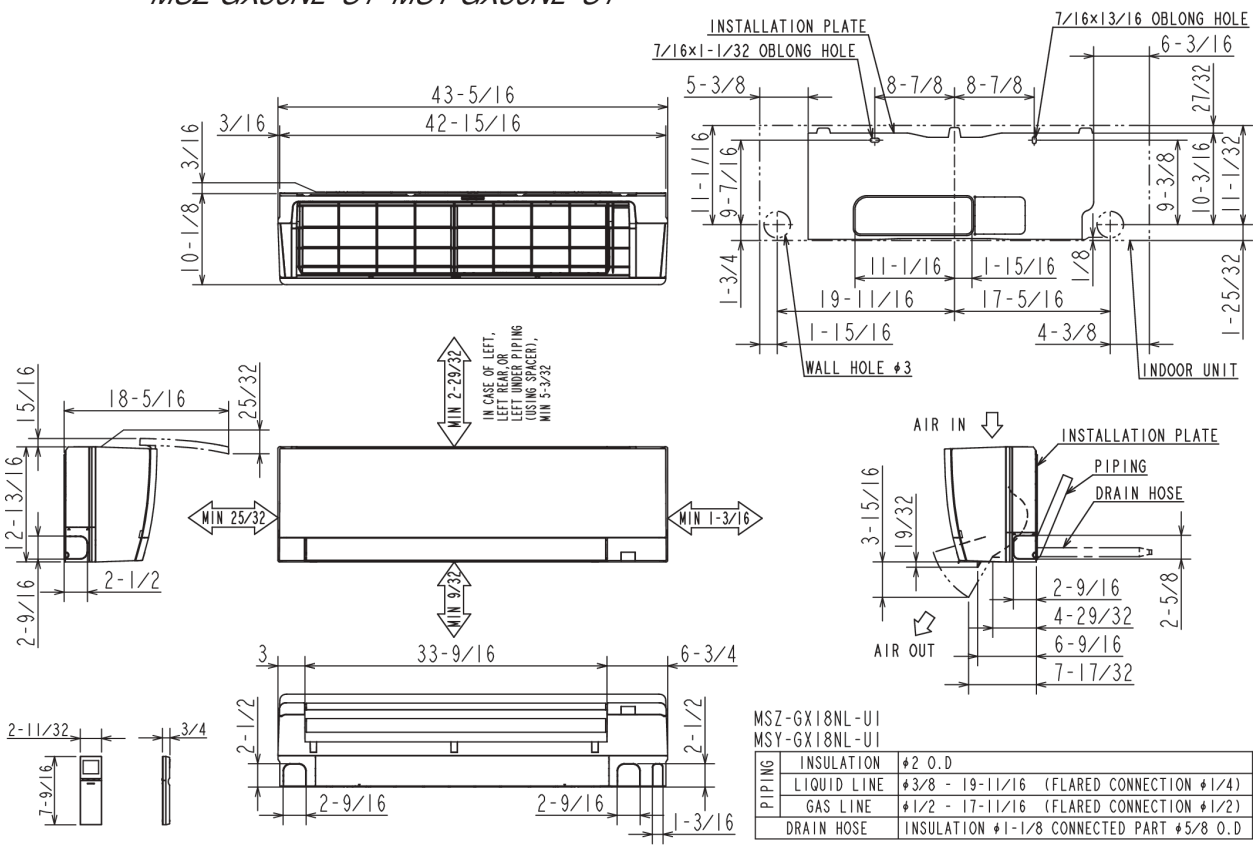

MSZ-GX18NL-U1
MSY-GX18NL-U1

PIPING	INSULATION	ϕ2 O.D
	LIQUID LINE	ϕ3/8 - 19-11/16 (FLARED CONNECTION ϕ1/4)
	GAS LINE	ϕ1/2 - 17-11/16 (FLARED CONNECTION ϕ1/2)
DRAIN HOSE		INSULATION ϕ1-1/8 CONNECTED PART ϕ5/8 O.D

MSZ-GX24/30/36NL-U1
MSY-GX24/30/36NL-U1

PIPING	INSULATION	ϕ2 O.D
	LIQUID LINE	ϕ3/8 - 19-11/16 (FLARED CONNECTION ϕ1/4)
	GAS LINE	ϕ1/2 - 17-11/16 (FLARED CONNECTION ϕ5/8)
DRAIN HOSE		INSULATION ϕ1-1/8 CONNECTED PART ϕ5/8 O.D

1340 Satellite Boulevard Suwanee, GA 30024
Toll Free: 800-433-4822 · mitsubishicomfort.com

METUS_2026-04_PROPIN

Specifications are subject to change without notice.
© 2025 Mitsubishi Electric Trane HVAC US LLC. All rights reserved.