MITSUBISHI ELECTRIC

SPLIT-TYPE AIR CONDITIONERS

Revision B:

- Electronic control P.C. boards for MSZ-HE09/12/15/18NA have been changed.

OBB686 REVISED EDITION-A is void.

INDOOR UNIT

No. OBB685
REVISED EDITION-B

PARTS CATALOG

Models

MSZ-HE09NA
MSZ-HE12NA
MSZ-HE15NA
MSZ-HE18NA
MSZ-HE24NA

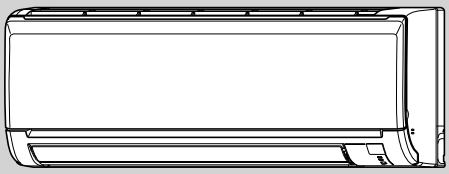

MSZ-HE09NA
MSZ-HE12NA
MSZ-HE15NA
MSZ-HE18NA

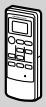

CONTENTS

1. RoHS PARTS LIST 2
2. OPTIONAL PARTS 10

SERVICE MANUAL (OBH685)

NOTE:
RoHS compliant products have <G> mark on the spec name plate.

Revision A:
• Electronic control P.C. board for MSZ-HE24NA has been changed.

Revision B:
• Electronic control P.C. boards for MSZ-HE09/12/15/18NA have been changed.

1 RoHS PARTS LIST

MSZ-HE09NA MSZ-HE12NA MSZ-HE15NA MSZ-HE18NA

1-1. INDOOR UNIT STRUCTURAL PARTS

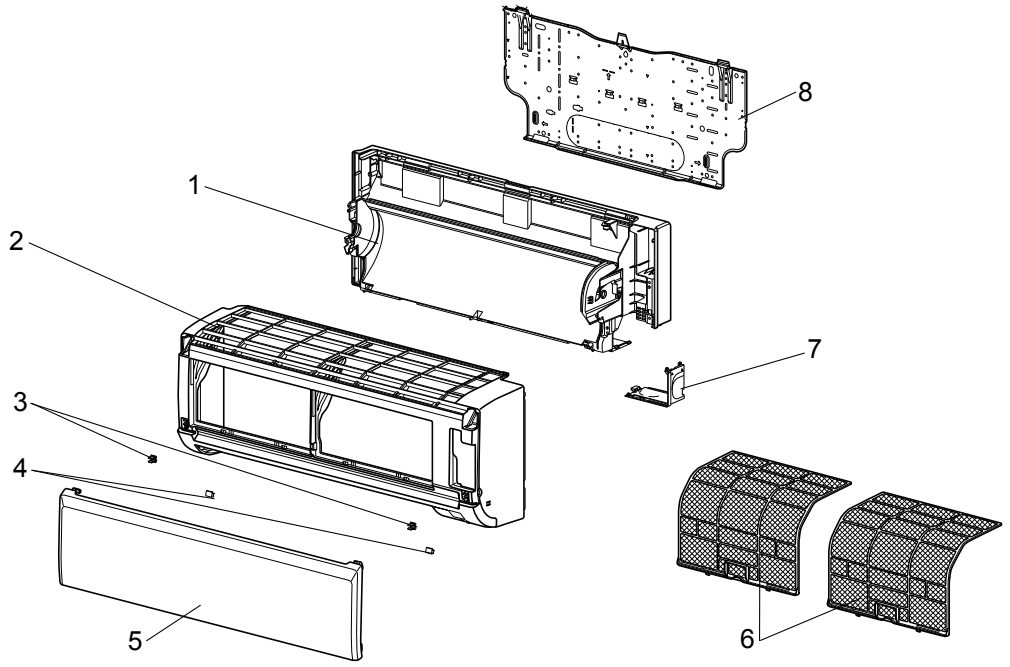

1-2. ACCESSORY AND REMOTE CONTROLLER

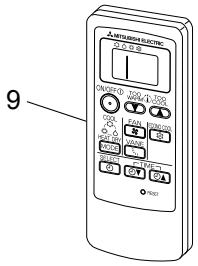

RoHS PARTS LIST

MSZ-HE09NA MSZ-HE12NA MSZ-HE15NA MSZ-HE18NA

1-1. INDOOR UNIT STRUCTURAL PARTS

No.	RoHS	Part No.	Part name	Symbol in Wiring Diagram	Q'ty/unit MSZ-HE				Remarks
					09NA	12NA	15NA	18NA	
1	G	E12 D68 234	BOX ASSEMBLY		1	1	1	1	
2	G	E12 N38 000	PANEL ASSEMBLY		1	1	1	1	Including No. 3,4,5
3	G	E12 408 142	CATCH		2	2	2	2	2 PCS/SET
4	G	E12 913 067	SCREW CAP		2	2	2	2	2 PCS/SET
5	G	E12 E79 010	FRONT PANEL		1	1	1	1	
6	G	E12 N38 100	AIR FILTER		2	2	2	2	1 PC/SET
7	G	E12 D68 975	CORNER BOX (RIGHT)		1	1	1	1	
8	G	E12 D68 970	INSTALLATION PLATE		1	1	1	1	

1-2. ACCESSORY AND REMOTE CONTROLLER

No.	RoHS	Part No.	Part name	Symbol in Wiring Diagram	Q'ty/unit MSZ-HE				Remarks
					09NA	12NA	15NA	18NA	
9	G	E12 N38 426	REMOTE CONTROLLER		1	1	1	1	MP14A

RoHS PARTS LIST

MSZ-HE09NA MSZ-HE12NA MSZ-HE15NA MSZ-HE18NA
1-3. INDOOR UNIT ELECTRICAL PARTS AND FUNCTIONAL PARTS

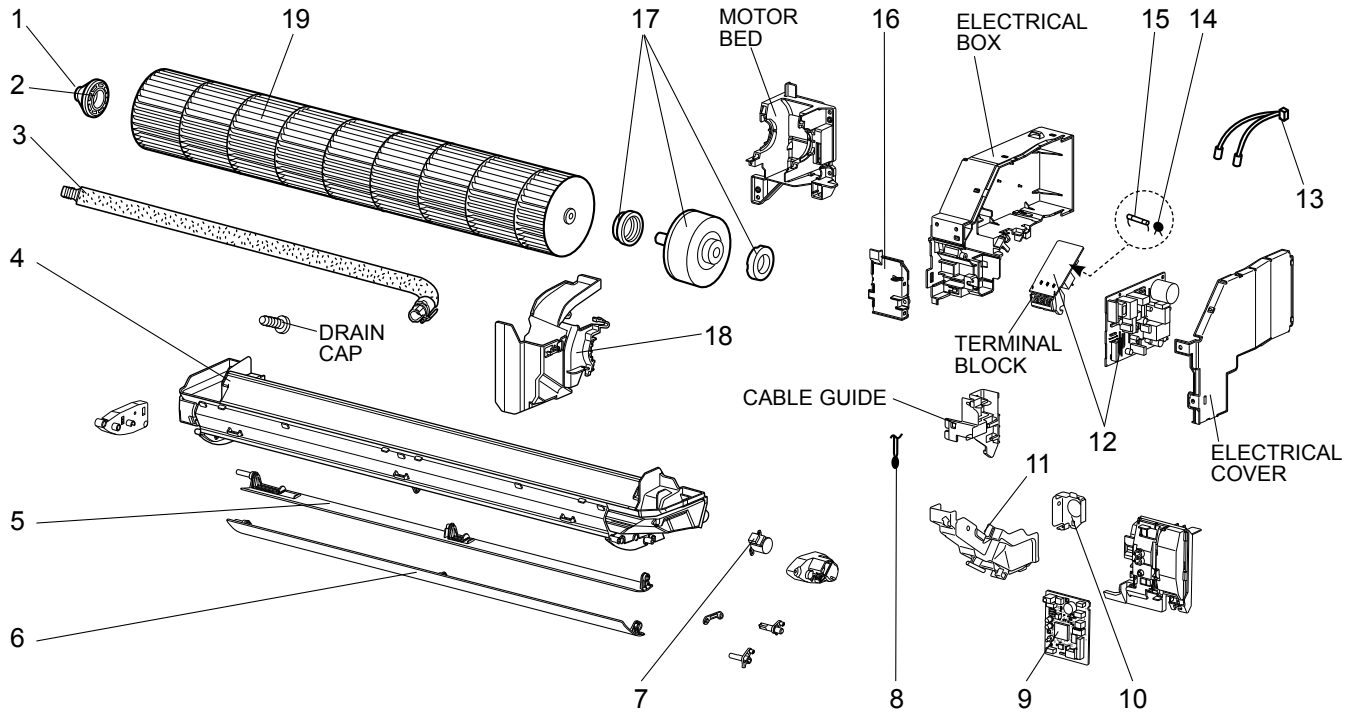

RoHS PARTS LIST

MSZ-HE09NA MSZ-HE12NA MSZ-HE15NA MSZ-HE18NA
1-3. INDOOR UNIT ELECTRICAL PARTS AND FUNCTIONAL PARTS

No.	RoHS	Part No.	Part name	Symbol in Wiring Diagram	Q'ty/unit MSZ-HE 09NA	12NA	15NA	18NA	Remarks
1	G	E12 751 509	BEARING MOUNT		1	1	1	1	
2	G	E12 001 504	SLEEVE BEARING		1	1	1	1	
3	G	E12 897 702	DRAIN HOSE		1	1	1	1	
4	G	E12 E79 235	NOZZLE ASSEMBLY		1	1	1	1	
5	G	E12 D68 040	VANE (UPPER)		1	1	1	1	
6	G	E12 D68 041	VANE (LOWER)		1	1	1	1	
7	G	E12 A89 303	VANE MOTOR	MV	1	1	1	1	UP & DOWN
8	G	E12 D68 308	ROOM TEMPERATURE THERMISTOR	RT11	1	1	1	1	
9	G	E12 19C 452	ELECTRONIC CONTROL P.C. BOARD		1				
	G	E12 20C 452				1			
	G	E12 21C 452					1		
	G	E12 22C 452						1	
10	G	E12 E79 978	CONDUIT PLATE		1	1	1	1	
11	G	E12 E79 979	CONDUIT COVER		1	1	1	1	
12	G	E12 E79 440	POWER P.C. BOARD ※1		1	1	1	1	
13	G	E12 D68 307	INDOOR COIL THERMISTOR	RT12,RT13	1	1	1	1	
14	G	E12 B75 385	VARISTOR	NR11	1	1	1	1	
15	G	E12 A49 382	FUSE	F11	1	1	1	1	T3.15AL250V
16	G	E12 G41 784	V.A. CLAMP		1	1	1	1	
17	G	E12 G41 300	INDOOR FAN MOTOR ※2	MF	1	1	1	1	RC0J40-□□
18	G	E12 D68 333	MOTOR BAND		1	1	1	1	
19	G	E12 A89 302	LINE FLOW FAN		1	1	1	1	

※1 Including TERMINAL BLOCK with TERMINAL P.C. BOARD
※2 Including FAN MOTOR RUBBER MOUNT (2 PCS/SET)

RoHS PARTS LIST

MSZ-HE09NA MSZ-HE12NA MSZ-HE15NA MSZ-HE18NA

1-4. INDOOR UNIT HEAT EXCHANGER

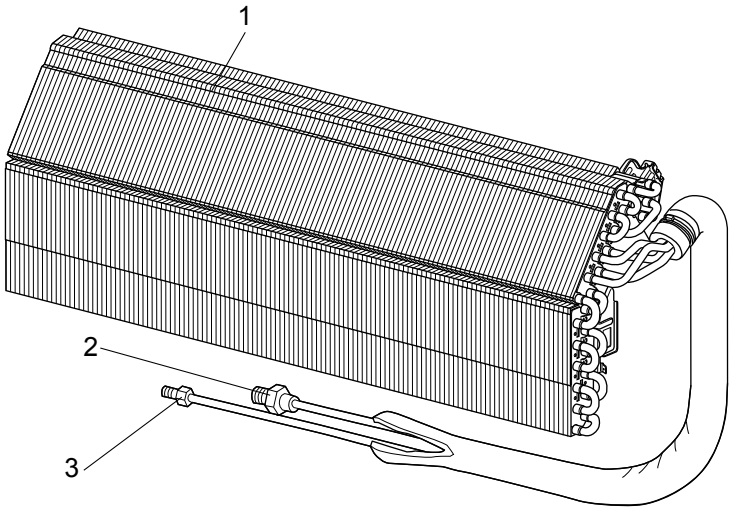

No.	RoHS	Part No.	Part name	Symbol in Wiring Diagram	Q'ty/unit MSZ-HE 09NA	12NA	15NA	18NA	Remarks
1	G	E12 N38 620	INDOOR HEAT EXCHANGER		1	1			
	G	E12 N40 620					1	1	
2	G	E12 815 666	UNION (GAS) (ø9.52)		1	1			ø3/8
	G	E12 155 666	UNION (GAS) (ø12.7)				1	1	ø1/2
3	G	E12 151 667	UNION (LIQUID) (ø6.35)		1	1	1	1	ø1/4

RoHS PARTS LIST

MSZ-HE24NA
1-5. INDOOR UNIT STRUCTURAL PARTS

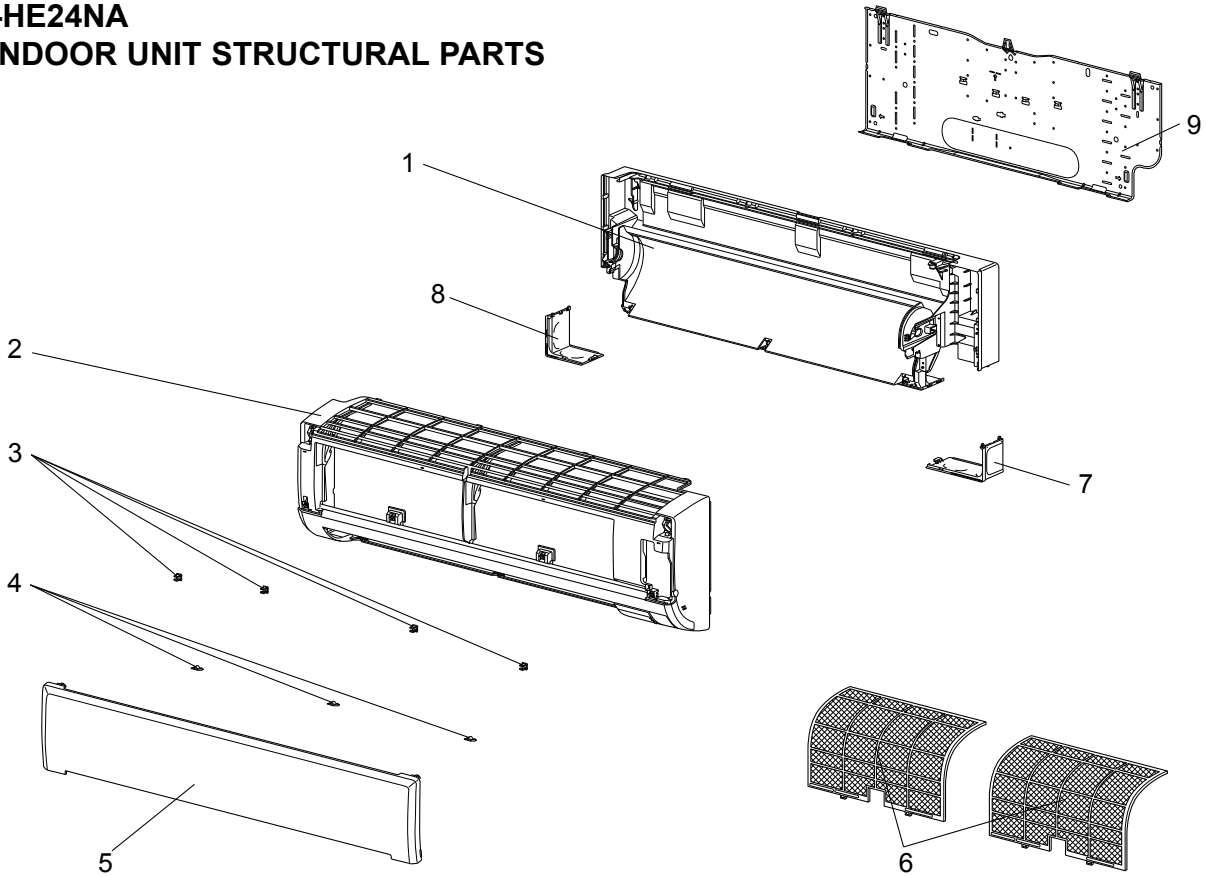

No.	RoHS	Part No.	Part name	Symbol in Wiring Diagram	Q'ty/unit	Remarks
					MSZ-HE24NA	
1	G	E12 J94 234	BOX ASSEMBLY		1	
2	G	E12 N42 000	PANEL ASSEMBLY		1	Including No. 3,4,5
3	G	E12 408 142	CATCH		4	4 PCS/SET
4	G	E12 F28 067	SCREW CAP		3	3 PCS/SET
5	G	E12 F28 010	FRONT PANEL		1	
6	G	E12 L53 100	ANTI MOLD FILTER		2	1 PC/SET
7	G	E12 F28 975	CORNER BOX (RIGHT)		1	
8	G	E12 F28 976	CORNER BOX (LEFT)		1	
9	G	E12 F28 970	INSTALLATION PLATE		1	

1-6. ACCESSORY AND REMOTE CONTROLLER

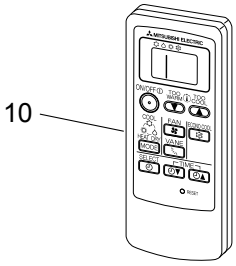

No.	RoHS	Part No.	Part name	Symbol in Wiring Diagram	Q'ty/unit	Remarks
					MSZ-HE24NA	
10	G	E12 N38 426	REMOTE CONTROLLER		1	MP14A

RoHS PARTS LIST

MSZ-HE24NA
1-7. INDOOR UNIT ELECTRICAL PARTS AND FUNCTIONAL PARTS

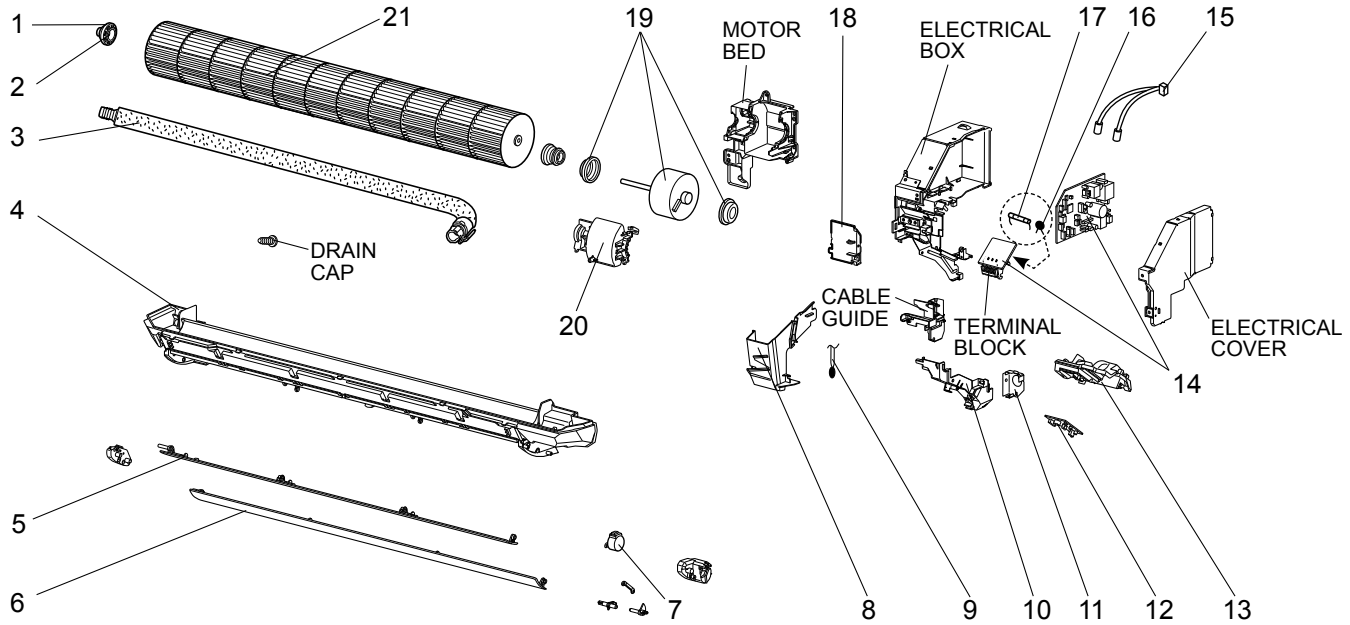

No.	RoHS	Part No.	Part name	Symbol in Wiring Diagram	Q'ty/unit MSZ-HE24NA	Remarks
1	G	E12 751 509	BEARING MOUNT		1	
2	G	E12 001 504	SLEEVE BEARING		1	
3	G	E12 408 702	DRAIN HOSE		1	
4	G	E12 N42 235	NOZZLE ASSEMBLY		1	
5	G	E12 F76 040	VANE (UPPER)		1	
6	G	E12 F76 041	VANE (LOWER)		1	
7	G	E12 C33 303	VANE MOTOR (HORIZONTAL)	MV	1	UP & DOWN
8	G	E12 F28 541	WATER CUT		1	
9	G	E12 C32 308	ROOM TEMPERATURE THERMISTOR	RT11	1	
10	G	E12 F76 979	CONDUIT COVER		1	
11	G	E12 F76 978	CONDUIT PLATE		1	
12	G	E12 F28 468	POWER MONITOR RECEIVER SW P.C. BOARD		1	
13	G	E12 F28 095	POWER MONITOR RECEIVER HOLDER		1	
14	G	E12 P67 452	ELECTRONIC CONTROL P.C. BOARD ※1		1	
15	G	E12 F28 307	INDOOR COIL THERMISTOR	RT12, RT13	1	
16	G	E12 B75 385	VARISTOR	NR11	1	
17	G	E12 A49 382	FUSE	F11	1	T3.15AL250V
18	G	E12 F76 784	V.A. CLAMP		1	
19	G	E12 F28 300	INDOOR FAN MOTOR ※2	MF	1	RC0J56-□□
20	G	E12 F28 333	MOTOR BAND		1	
21	G	E12 F28 302	LINE FLOW FAN		1	

※1 Including TERMINAL BLOCK with TERMINAL P.C. BOARD
※2 Including FAN MOTOR RUBBER MOUNT (2 PCS/SET)

RoHS PARTS LIST

MSZ-HE24NA
1-8. INDOOR UNIT HEAT EXCHANGER

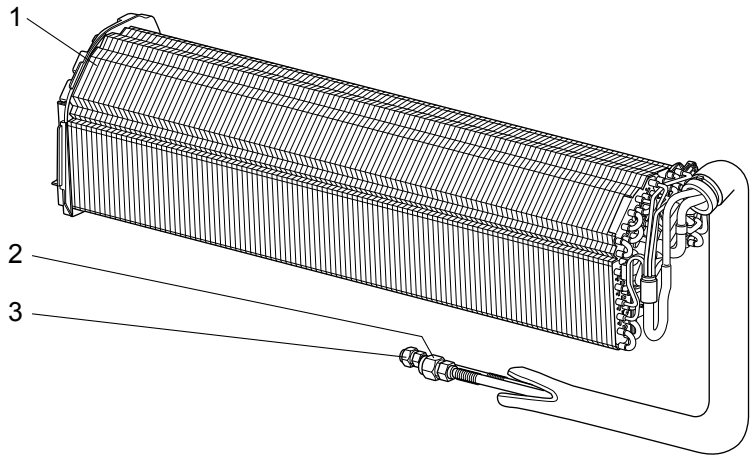

No.	RoHS	Part No.	Part name	Symbol in Wiring Diagram	Q'ty/unit	Remarks
					MSZ-HE24NA	
1	G	E12 N42 620	INDOOR HEAT EXCHANGER		1	
2	G	E12 527 666	UNION (GAS) (ø15.88)		1	ø5/8
3	G	E12 815 666	UNION (LIQUID) (ø9.52)		1	ø3/8

2 OPTIONAL PARTS

2-1. AIR CLEANING FILTER

Every 3 months:

● Remove dirt by a vacuum cleaner.

When dirt cannot be removed by vacuum cleaning:

● Soak the filter and its frame in lukewarm water before rinsing it.

● After washing, dry it well in shade.

Every year:

● Replace it with a new air cleaning filter for best performance.

NOTE 1: Clean the filters regularly for best performance and to reduce power consumption.

NOTE 2: Dirty filters cause condensation in the air conditioner which will contribute to the growth of fungi such as mold. It is therefore recommended to clean air filters every 2 weeks.

Model	Part No.
MSZ-HE09NA MSZ-HE12NA MSZ-HE15NA MSZ-HE18NA	MAC-408FT-E

Pull to remove from the air flter

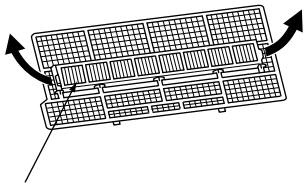

Air cleaning filter
(Anti-allergy enzyme filter)

Model	Part No.
MSZ-HE24NA	MAC-2310FT-E

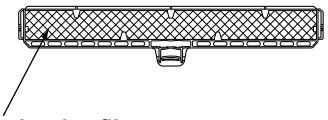

Air cleaning filter
(Electrostatic anti-allergy enzyme filter)

MITSUBISHI ELECTRIC CORPORATION

HEAD OFFICE: TOKYO BUILDING, 2-7-3, MARUNOUCHI, CHIYODA-KU, TOKYO 100-8310, JAPAN

© Copyright 2014 MITSUBISHI ELECTRIC CORPORATION

Issued: Sep. 2017. No. OBB685 REVISED EDITION-B
Issued: Nov. 2014. No. OBB685 REVISED EDITION-A
Published: Feb. 2014. No. OBB685
Made in Japan

Specifications are subject to change without notice.