MITSUBISHI ELECTRIC

SPLIT-TYPE AIR CONDITIONERS

Revision E:
- Remote controller P.C. board has been added. (7-2.)

OBH746 REVISED EDITION-D is void.

INDOOR UNIT

No. OBH746
REVISED EDITION-E

SERVICE MANUAL

Models

MSZ-HM09NA - U1, U2
MSZ-HM12NA - U1, U2
MSZ-HM15NA - U1, U2
MSZ-HM18NA - U1
MSZ-HM24NA - U1

Outdoor unit service manual
MUZ-HM•NA Series (OBH747)

MSZ-HM24NA

CONTENTS

1. TECHNICAL CHANGES 2
2. PART NAMES AND FUNCTIONS 3
3. SPECIFICATION 5
4. OUTLINES AND DIMENSIONS 7
5. WIRING DIAGRAM 8
6. REFRIGERANT SYSTEM DIAGRAM 10
7. SERVICE FUNCTIONS 11
8. MICROPROCESSOR CONTROL 13
9. TROUBLESHOOTING 17
10. DISASSEMBLY INSTRUCTIONS 32

PARTS CATALOG (OBB746)

Use the specified refrigerant only

Never use any refrigerant other than that specified.

Doing so may cause a burst, an explosion, or fire when the unit is being used, serviced, or disposed of.
Correct refrigerant is specified in the manuals and on the spec labels provided with our products.
We will not be held responsible for mechanical failure, system malfunction, unit breakdown or accidents caused by failure to follow the instructions.

<Preparation before the repair service>

- Prepare the proper tools.
- Prepare the proper protectors.
- Provide adequate ventilation.
- After stopping the operation of the air conditioner, turn off the power-supply breaker and pull the power plug.
- Discharge the capacitor before the work involving the electric parts.

<Precautions during the repair service>

- Do not perform the work involving the electric parts with wet hands.
- Do not pour water into the electric parts.
- Do not touch the refrigerant.
- Do not touch the hot or cold areas in the refrigeration cycle.
- When the repair or the inspection of the circuit needs to be done without turning off the power, exercise great caution not to touch the live parts.

⚠ WARNING

- **When the refrigeration circuit has a leak, do not execute pump down with the compressor.**
- **When pumping down the refrigerant, stop the compressor before disconnecting the refrigerant pipes. The compressor may burst if air etc. get into it.**
- **When opening or closing the valve below freezing temperatures, refrigerant may spurt out from the gap between the valve stem and the valve body, resulting in injuries.**

Revision A:
• MSZ-HM09/12/15/18NA-U1 have been added.

Revision B:
• 3-1. OPERATING RANGE has been modified.

Revision C:
• 9-7. TEST POINT DIAGRAM AND VOLTAGE has been modified.

Revision D:
• MSZ-HM09/12/15NA - U2 have been added.

Revision E:
• Remote controller P.C. board has been added. (7-2.)

1 TECHNICAL CHANGES

MSZ-HM24NA - U1

1. New model

MSZ-HM09NA - U1
MSZ-HM12NA - U1
MSZ-HM15NA - U1
MSZ-HM18NA - U1

1. New model

MSZ-HM09NA - U1 → **MSZ-HM09NA** - U2
MSZ-HM12NA - U1 → **MSZ-HM12NA** - U2
MSZ-HM15NA - U1 → **MSZ-HM15NA** - U2

1. Indoor electronic control P.C. board and indoor power P.C. board have been changed.

2 PART NAMES AND FUNCTIONS

MSZ-HM09NA MSZ-HM12NA MSZ-HM15NA

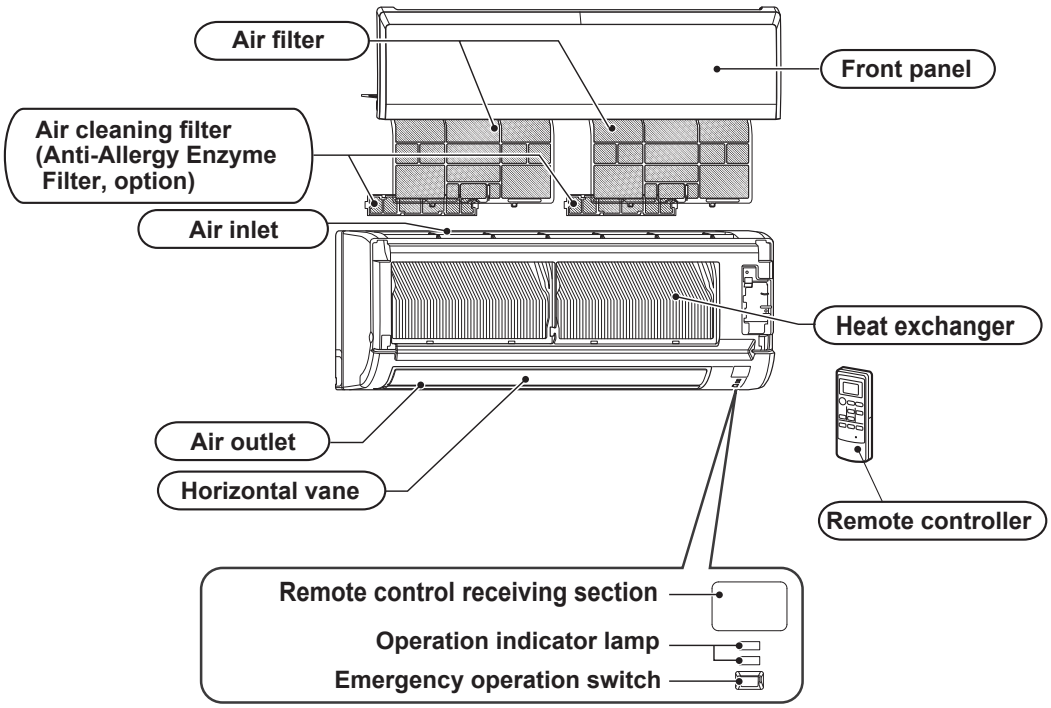

ACCESSORIES

①	Installation plate	1
②	Attachment screws for the installation plate 4 × 25 mm	5
③	Battery (AAA) for remote controller	2
④	Wireless remote controller	1
⑤	Felt tape (For left or left-rear piping)	1

MSZ-HM18NA MSZ-HM24NA

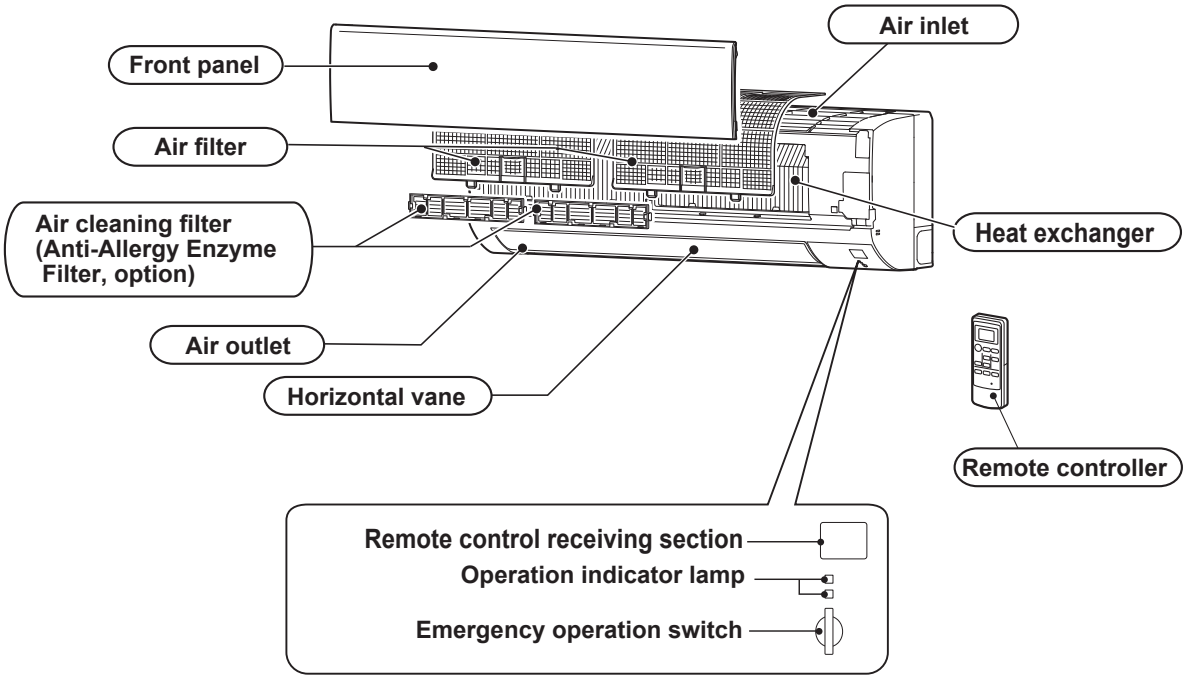

ACCESSORIES

①	Installation plate	1
②	Attachment screws for the installation plate 4 × 25 mm	5
③	Wireless remote controller	1
④	Felt tape (For left or left-rear piping)	1
⑤	Battery (AAA) for remote controller	2

3 SPECIFICATION

Indoor model			MSZ-HM09NA	MSZ-HM12NA	MSZ-HM15NA
Power supply	V, phase, Hz		208/230, 1, 60		
Max. fuse size (time delay)/ Disconnect switch		A	15		
Min. circuit ampacity		A	1.0		
Fan motor		F.L.A	0.76		
Airflow Super High - High - Med. - Low	COOL Dry (Wet)	CFM	399 - 321 - 237 - 170 (364 - 286 - 201 - 134)		533 - 420 - 335 - 272 (498 - 385 - 300 - 237)
	HEAT Dry	CFM	406 - 321 - 237 - 170		463 - 367 - 304 - 247
Moisture removal		pt./h	1.5	2.5	2.7
Sound level Super High - High - Med. - Low	Cooling	dB(A)	43 - 37 - 30 - 22	45 - 37 - 30 - 22	49 - 44 - 38 - 32
	Heating	dB(A)	43 - 37 - 30 - 22		46 - 40 - 35 - 30
Fan speed Super High - High - Med. - Low	Cooling	rpm	1,020 - 860 - 670 - 530		1,280 - 1,060 - 880 - 740
	Heating	rpm	1,040 - 860 - 670 - 530		1,140 - 950 - 810 - 690
Cond. drain connection O.D.		in.	5/8		
Dimensions	W	in.	31-7/16		
	D		9-1/8		
	H		11-5/8		
Weight		lb.	22		
External finish			Munsell 1.0Y 9.2/0.2		
Control voltage (by built-in transformer)			12 - 24 V DC		

NOTE: Test conditions are based on AHRI 210/240.

Indoor model			MSZ-HM18NA	MSZ-HM24NA
Power supply	V, phase, Hz		208/230, 1, 60	
Max. fuse size (time delay)/ Disconnect switch		A	15	
Min. circuit ampacity		A	1.0	
Fan motor		F.L.A	0.67	
Airflow Super High - High - Med. - Low	COOL Dry (Wet)	CFM	625 - 530 - 431 - 328 (562 - 477 - 388 - 295)	702 - 530 - 431 - 353 (632 - 477 - 388 - 318)
	HEAT Dry	CFM	625 - 530 - 431 - 307	702 - 579 - 448 - 346
Moisture removal		pt./h	2.1	2.3
Sound level Super High - High - Med. - Low	Cooling	dB(A)	47 - 42 - 37 - 30	50 - 44 - 38 - 33
	Heating	dB(A)	47 - 42 - 37 - 30	50 - 44 - 38 - 32
Fan speed Super High - High - Med. - Low	Cooling	rpm	1,140 - 1,000 - 850 - 690	1,250 - 1,000 - 850 - 730
	Heating	rpm	1,140 - 1,000 - 850 - 660	1,250 - 1,070 - 880 - 720
Cond. drain connection O.D.		in.	5/8	
Dimensions	W	in.	36-5/16	
	D		9-13/16	
	H		12	
Weight		lb.	28	
External finish			Munsell 1.0Y 9.2/0.2	
Control voltage (by built-in transformer)			12 - 24 V DC	

NOTE: Test conditions are based on AHRI 210/240.

3-1. OPERATING RANGE

(1) POWER SUPPLY

	Rated voltage	Guaranteed voltage (V)
Indoor unit	208/230 V 1 phase 60 Hz	Min. 187 208 230 Max. 253

(2) OPERATION

Mode	Condition	Intake air temperature (°F)	
		DB	WB
Cooling	Standard temperature	80	67
	Maximum temperature	90	73
	Minimum temperature	67	57
	Maximum humidity	78%	
Heating	Standard temperature	70	60
	Maximum temperature	80	67
	Minimum temperature	70	60

3-2. OUTLET AIR SPEED AND COVERAGE

Model	Mode	Function	Airflow (CFM)	Air speed (ft./s.)	Coverage (ft.)
MSZ-HM09NA	HEAT	Dry	406	20.6	29.5
	COOL	Dry	321	16.3	23.5
		Wet	286	14.5	21.0
MSZ-HM12NA	HEAT	Dry	406	20.6	29.5
	COOL	Dry	321	16.3	23.5
		Wet	286	14.5	21.0
MSZ-HM15NA	HEAT	Dry	463	23.4	33.5
	COOL	Dry	420	21.3	30.5
		Wet	385	19.5	28.0
MSZ-HM18NA	HEAT	Dry	625	28.5	42.6
	COOL	Dry	625	28.5	42.6
		Wet	562	25.6	38.4
MSZ-HM24NA	HEAT	Dry	702	32.0	47.7
	COOL	Dry	702	32.0	47.7
		Wet	632	28.8	43.1

- The air coverage is the figure up to the position where the air speed is 1 ft./s., when air is blown out horizontally from the unit properly at the High speed position.
  The coverage should be used only as a general guideline since it varies according to the size of the room and furniture arranged inside the room.

4 OUTLINES AND DIMENSIONS

MSZ-HM09NA MSZ-HM12NA MSZ-HM15NA

Unit: inch

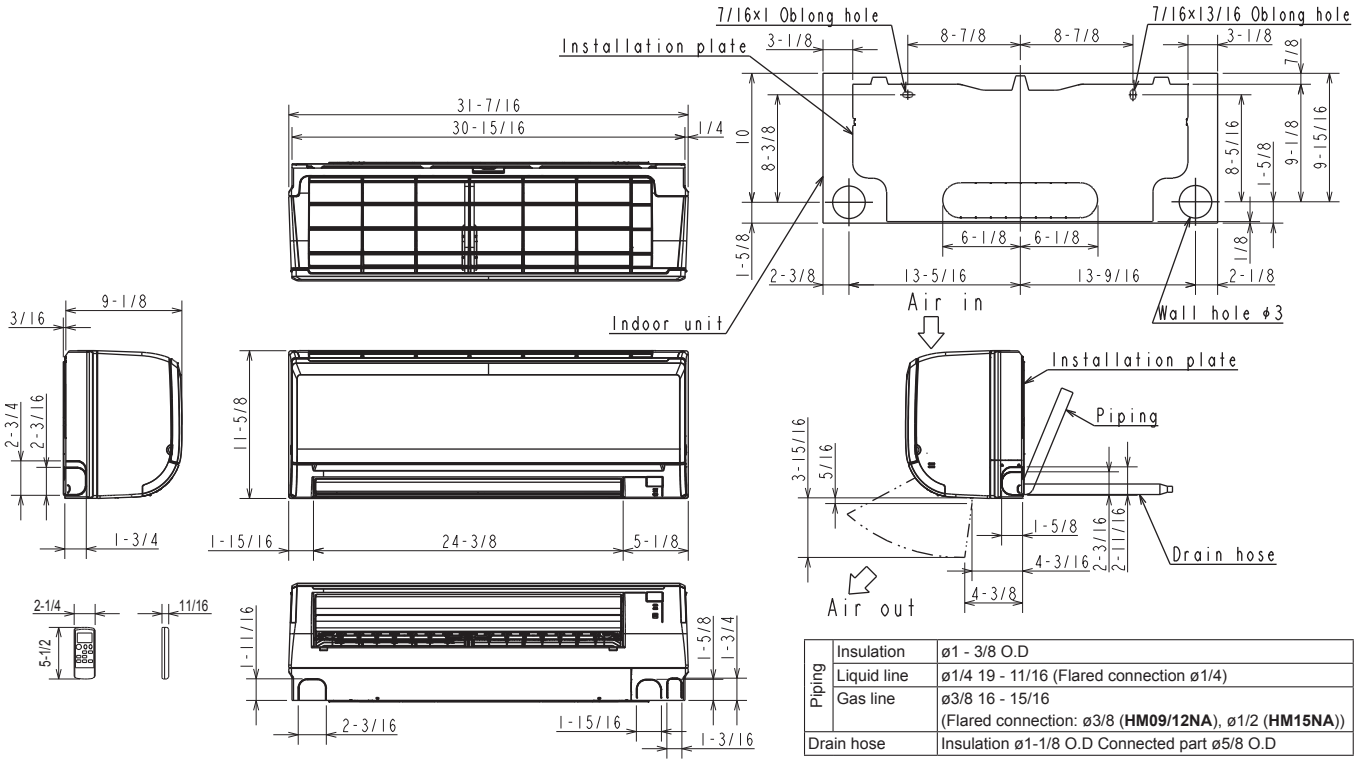

Piping	Insulation	ø1 - 3/8 O.D
	Liquid line	ø1/4 19 - 11/16 (Flared connection ø1/4)
	Gas line	ø3/8 16 - 15/16 (Flared connection: ø3/8 (**HM09/12NA**), ø1/2 (**HM15NA**))
Drain hose		Insulation ø1-1/8 O.D Connected part ø5/8 O.D

MSZ-HM18NA MSZ-HM24NA

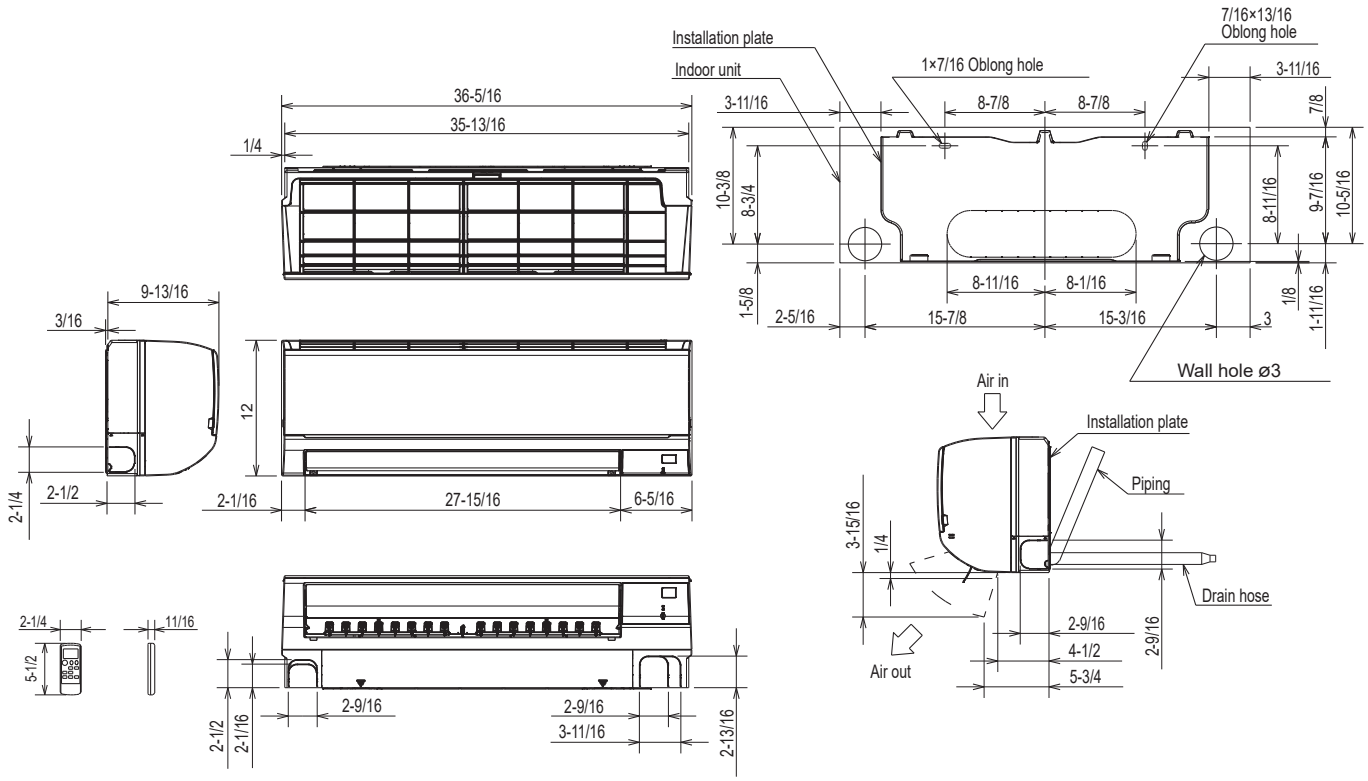

MSZ-HM18NA

Piping	Insulation	ø2 O.D
	Liquid line	ø5/16 15-3/8 (Flared connection ø1/4)
	Gas line	ø15/32 13-3/8 (Flared connection ø1/2)
Drain hose		Insulation ø1-1/8 Connected part ø5/8 O.D

MSZ-HM24NA

Piping	Insulation	ø2 O.D
	Liquid line	ø5/16 15-3/8 (Flared connection ø3/8)
	Gas line	ø15/32 13-3/8 (Flared connection ø5/8)
Drain hose		Insulation ø1-1/8 Connected part ø5/8 O.D

5 WIRING DIAGRAM

MSZ-HM09NA - U1 MSZ-HM12NA - U1 MSZ-HM15NA - U1

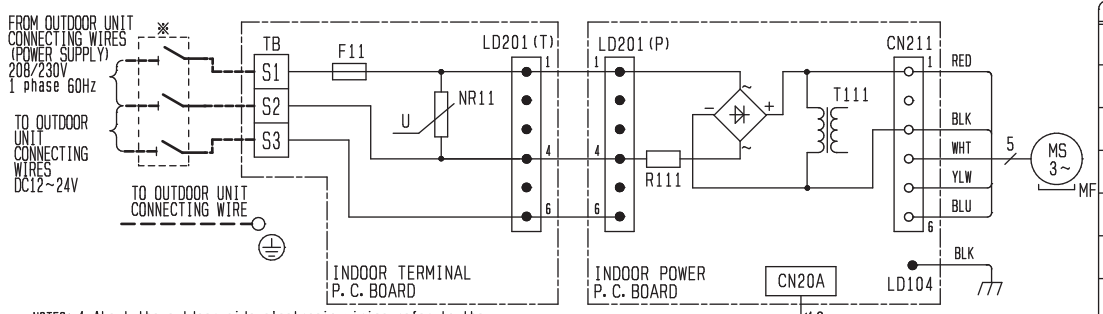

NOTES: 1. About the outdoor side electronic wiring refer to the outdoor unit electronic wiring diagram for servicing.
2. Use copper supply wire.
3. Symbols indicate. : Terminal block : Connector
※ A disconnect should be required by local code.

REMARQUES: 1. Pour le câblage électronique côté extérieur, se reporter au schéma d'entretien du câblage électronique de l'appareil extérieur.
2. Utiliser des fils d'alimentation en cuivre.
3. Les symboles ont les significations suivantes. : Borne : Connecteur
※ Se procurer un sectionneur conforme aux réglementations locales.

SYMBOL	NAME
F11	FUSE (T3.15AL250V)
MF	FAN MOTOR
MV	VANE MOTOR (HORIZONTAL)
NR11	VARISTOR
R111	RESISTOR
RT11	ROOM TEMP. THERMISTOR
RT12	COIL TEMP. THERMISTOR (MAIN)
RT13	COIL TEMP. THERMISTOR (SUB)
T111	TRANSFORMER
TB	TERMINAL BLOCK

MSZ-HM09NA - U2 MSZ-HM12NA - U2 MSZ-HM15NA - U2

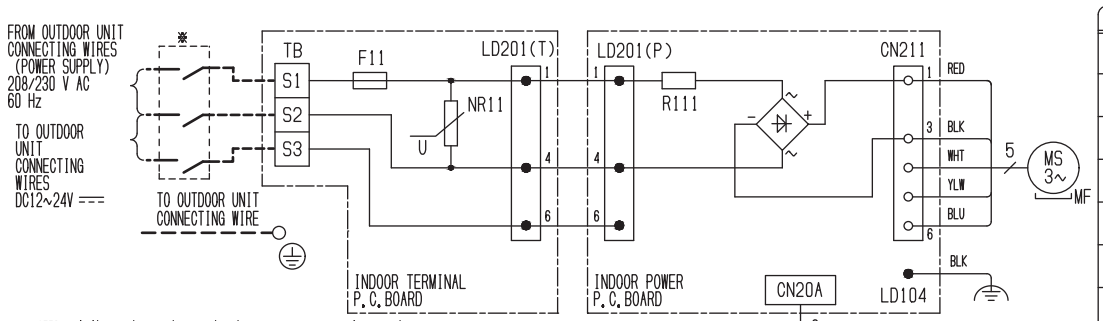

NOTES: 1. About the outdoor side electronic wiring refer to the outdoor unit electronic wiring diagram for servicing.
2. Use copper supply wire.
3. Symbols indicate. : Terminal block : Connector
※ A disconnect should be required by local code.

REMARQUES: 1. Pour le câblage électronique côté extérieur, se reporter au schéma d'entretien du câblage électronique de l'appareil extérieur.
2. Utiliser des fils d'alimentation en cuivre.
3. Les symboles ont les significations suivantes. : Borne : Connecteur
※ Se procurer un sectionneur conforme aux réglementations locales.

SYMBOL	NAME
F11	FUSE (T3.15AL250V)
MF	FAN MOTOR
MV	VANE MOTOR (HORIZONTAL)
NR11	VARISTOR
R111	RESISTOR
RT11	ROOM TEMP. THERMISTOR
RT12	COIL TEMP. THERMISTOR(MAIN)
RT13	COIL TEMP. THERMISTOR(SUB)
TB	TERMINAL BLOCK

MSZ-HM18NA MSZ-HM24NA

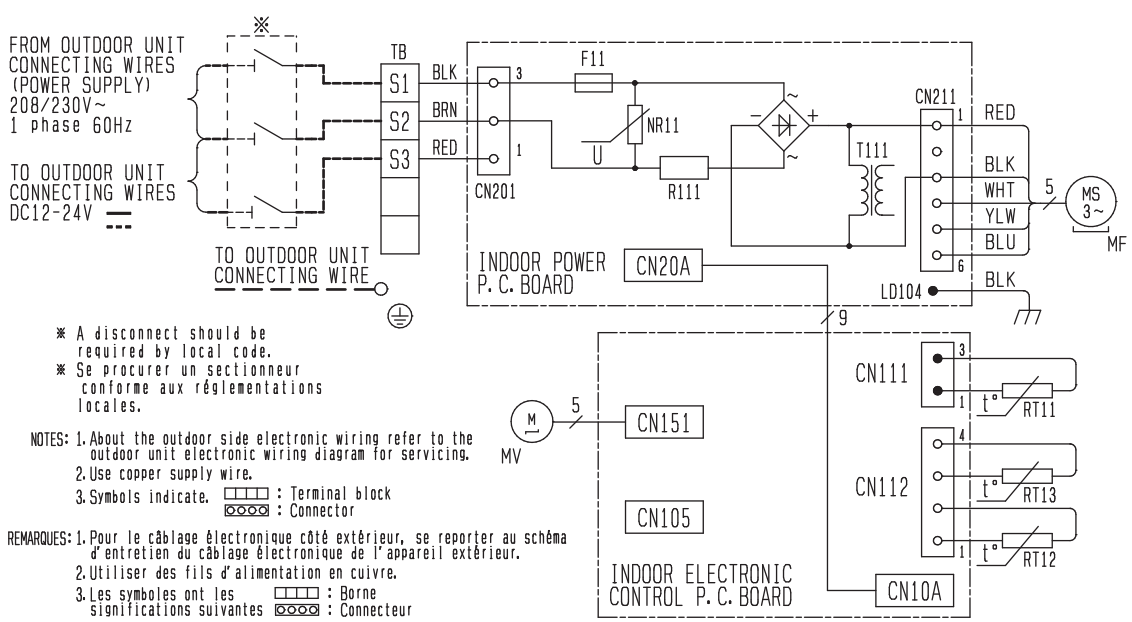

SYMBOL	NAME
F11	FUSE (T3. 15AL250V)
MF	FAN MOTOR
MV	VANE MOTOR (HORIZONTAL)
NR11	VARISTOR
R111	RESISTOR
RT11	ROOM TEMP. THERMISTOR
RT12	COIL TEMP. THERMISTOR (MAIN)
RT13	COIL TEMP. THERMISTOR (SUB)
T111	TRANSFORMER
TB	TERMINAL BLOCK

※ A disconnect should be required by local code.
※ Se procurer un sectionneur conforme aux réglementations locales.

NOTES: 1. About the outdoor side electronic wiring refer to the outdoor unit electronic wiring diagram for servicing.
2. Use copper supply wire.
3. Symbols indicate. : Terminal block : Connector

REMARQUES: 1. Pour le câblage électronique côté extérieur, se reporter au schéma d'entretien du câblage électronique de l'appareil extérieur.
2. Utiliser des fils d'alimentation en cuivre.
3. Les symboles ont les significations suivantes : Borne : Connecteur

6 REFRIGERANT SYSTEM DIAGRAM

MSZ-HM09NA MSZ-HM12NA MSZ-HM15NA

Unit: inch (mm)

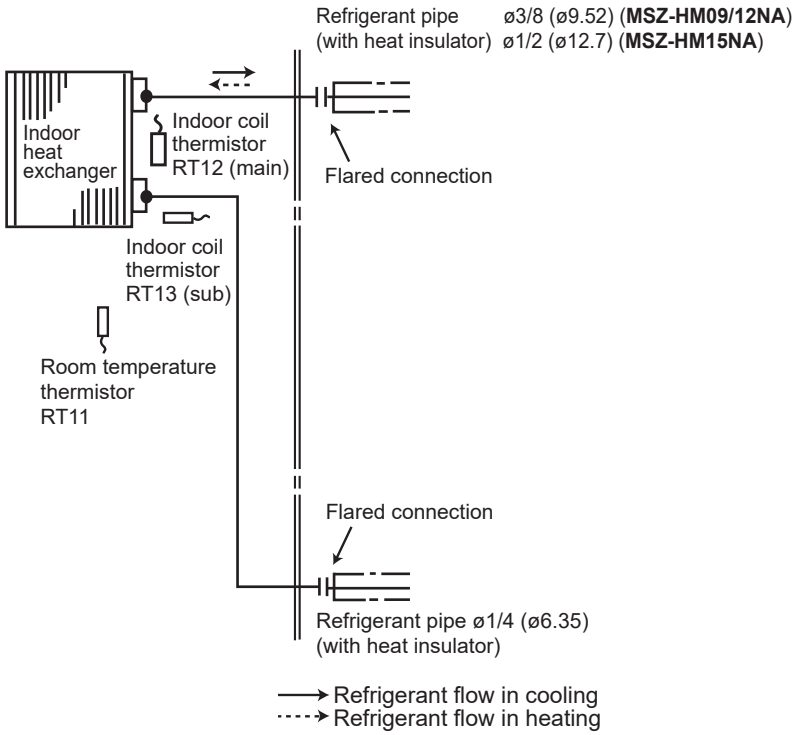

MSZ-HM18NA MSZ-HM24NA

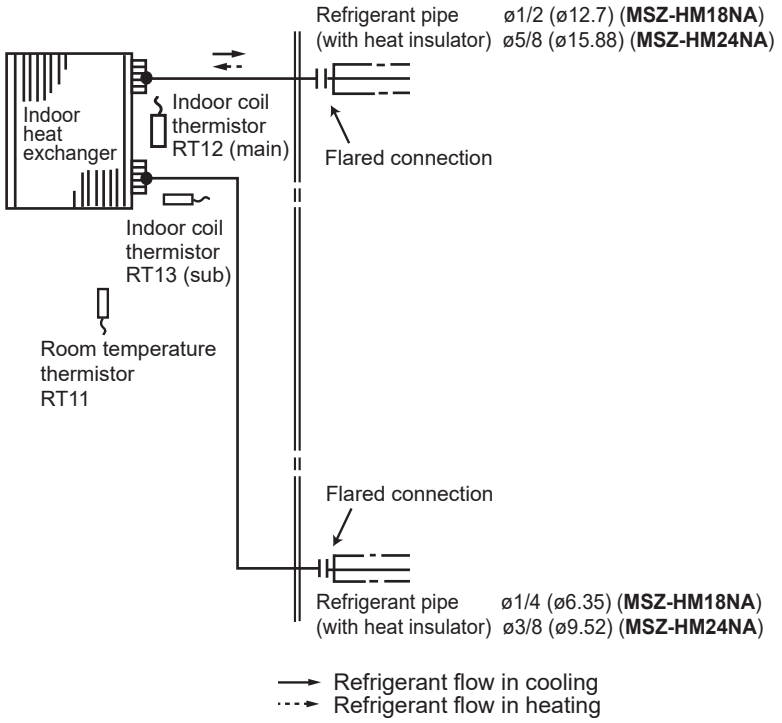

7 SERVICE FUNCTIONS

MSZ-HM09NA MSZ-HM12NA MSZ-HM15NA MSZ-HM18NA MSZ-HM24NA

7-1. TIMER SHORT MODE

For service, the set time can be shortened by bridging of the timer short point on the indoor electronic control P.C. board. The time will be shortened as follows. (Refer to 9-7.)

- The set time for the ON/OFF timer can be reduced to 1 second for each minute.
- After the breaker is turned on, the time for starting the compressor, which normally takes 3 minutes, can be reduced to 3 seconds. Restarting the compressor, which takes 3 minutes, cannot be reduced.

7-2. REMOTE CONTROLLER P.C. BOARD MODIFICATION FOR INDIVIDUAL OPERATION

A maximum of 4 indoor units with wireless remote controllers can be used in a room.
In this case, to operate each indoor unit individually by each remote controller, the remote controller P.C. boards must be modified according to the number of the indoor unit.

NOTE: For modification, take out the batteries and press the STOP/OPERATE (OFF/ON) button 2 or 3 times at first.

How to modify the remote controller P.C. board
Remove batteries before modification.
The board has one of the following prints:

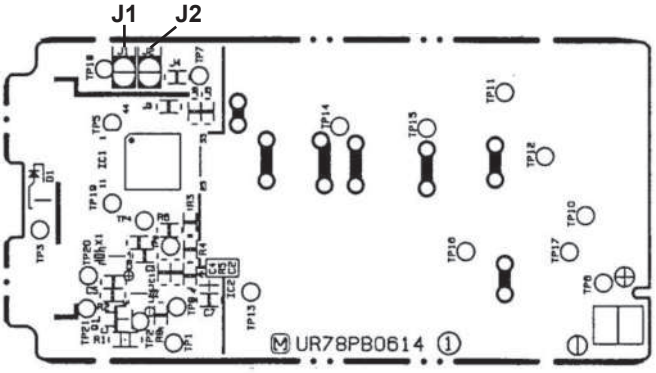

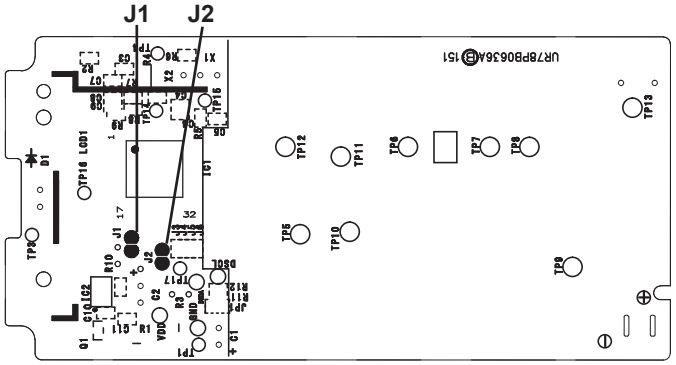

The remote controller P.C. board has the print “J1” and “J2”. Solder “J1” and “J2” according to the number of indoor unit as shown in Table 1.
After modification, press the RESET button.

Table 1

	1 unit operation	2 units operation	3 units operation	4 units operation
No. 1 unit	No modification	Same as at left	Same as at left	Same as at left
No. 2 unit	—	Solder J1	Same as at left	Same as at left
No. 3 unit	—	—	Solder J2	Same as at left
No. 4 unit	—	—	—	Solder both J1 and J2

How to set the remote controller exclusively for particular indoor unit
After you turn the breaker ON, the first remote controller that sends the signal to the indoor unit will be regarded as the remote controller for the indoor unit.
The indoor unit will only accept the signal from the remote controller that has been assigned to the indoor unit once they are set.
The setting will be cancelled if the breaker is turned OFF, or the power supply is shut down.
Please conduct the above setting once again after the power has been restored.

7-3. AUTO RESTART FUNCTION

When the indoor unit is controlled with the remote controller, the operation mode, the set temperature, and the fan speed are memorized by the indoor electronic control P.C. board. “AUTO RESTART FUNCTION” automatically starts operation in the same mode just before the shut-off of the main power.

Operation

① If the main power has been cut, the operation settings remain.
② After the power is restored, the unit restarts automatically according to the memory.
(However, it takes at least 3 minutes for the compressor to start running.)

How to disable “AUTO RESTART FUNCTION”

① Turn OFF the main power of the unit.
② Solder the Jumper wire JR07 on the indoor electronic control P.C. board. **(HM09/12/15NA)**
Cut the Jumper wire JR77 on the indoor electronic control P.C. board. **(HM18/24NA)** (Refer to 9-7.)

MSZ-HM09/12/15NA

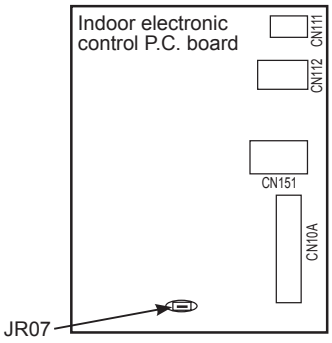

MSZ-HM18/24NA

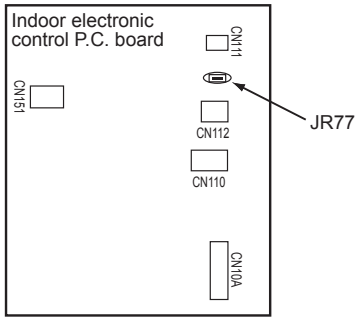

NOTE:

- The operation settings are memorized when 10 seconds have passed after the indoor unit was operated with the remote controller.
- If main power is turned OFF or a power failure occurs while AUTO START/STOP timer is active, the timer setting is cancelled.
- If the unit has been turned OFF with the remote controller before power failure, the auto restart function does not work as the power button of the remote controller is OFF.
- To prevent the breaker from tripping OFF due to the rush of starting current, systematize other home appliance not to turn ON at the same time.
- When some air conditioners are connected to the same supply system, if they are operated before power failure, the starting current of all the compressors may flow simultaneously at restart.
  Therefore, the special counter-measures are required to prevent the main voltage-drop or the rush of the starting current by adding to the system that allows the units to start one by one.

8 MICROPROCESSOR CONTROL

MSZ-HM09NA MSZ-HM12NA MSZ-HM15NA MSZ-HM18NA MSZ-HM24NA

WIRELESS REMOTE CONTROLLER

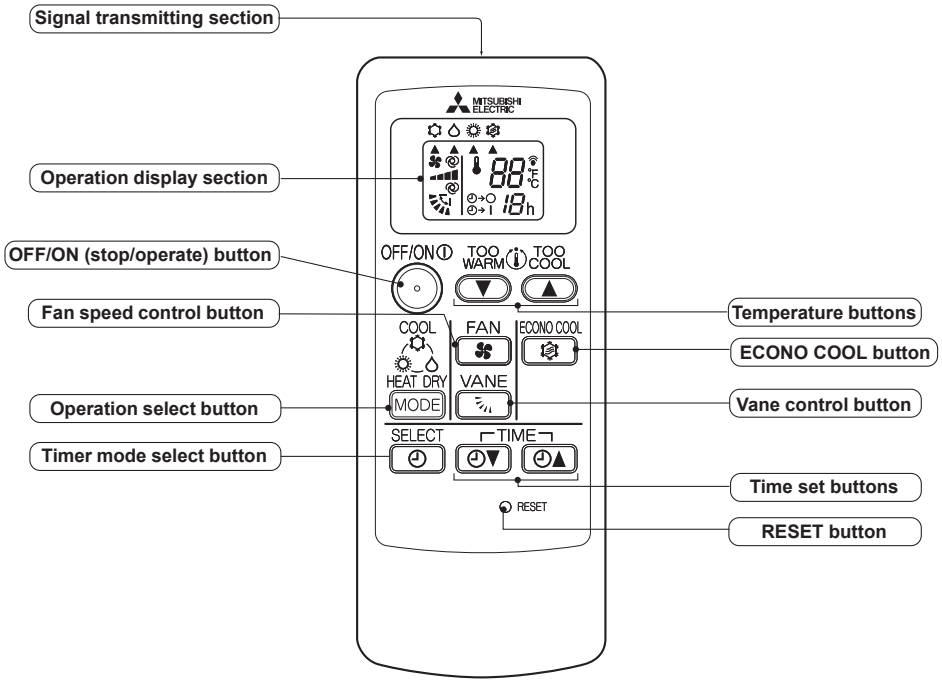

NOTE: Last setting will be stored after the unit is turned OFF with the remote controller. Indoor unit receives the signal of the remote controller with beeps.

INDOOR UNIT DISPLAY SECTION

Operation Indicator lamp

The operation indicator at the right side of the indoor unit indicates the operation state.

•The following indication applies regardless of shape of the indication.

Indication	Operation state	Room temperature
● ●	The unit is operating to reach the set temperature	About 4°F (2°C) or more away from set temperature
● ○	The room temperature is approaching the set temperature	About 2 to 4 °F (1° to 2°C) from set temperature

● Lit
☼ Blinking
○ Not lit

8-1. COOL (⌬) OPERATION

(1) Press STOP/OPERATE (OFF/ON) button.
OPERATION INDICATOR lamp of the indoor unit turns on with a beep tone.
(2) Select COOL mode with OPERATION SELECT button.
(3) Press TEMPERATURE buttons (TOO WARM or TOO COOL button) to select the desired temperature.
The setting range is 61 - 88°F (16 - 31°C).

1. Coil frost prevention

The compressor operational frequency is controlled by the temperature of the indoor heat exchanger to prevent the coil from frosting.

When the temperature of indoor heat exchanger becomes too low, the coil frost prevention mode works. The indoor fan operates at the set speed and the compressor stops. This mode continues until the temperature of indoor heat exchanger rises.

8-2. DRY (💧) OPERATION

(1) Press STOP/OPERATE (OFF/ON) button.
OPERATION INDICATOR lamp of the indoor unit turns on with a beep tone.
(2) Select DRY mode with OPERATION SELECT button.
(3) The set temperature is determined from the initial room temperature.

1. Coil frost prevention

Coil frost prevention works the same way as that in COOL mode. (8-1.1.)

8-3. HEAT (☼) OPERATION

(1) Press STOP/OPERATE (OFF/ON) button.
OPERATION INDICATOR lamp of the indoor unit turns on with a beep tone.
(2) Select HEAT mode with OPERATION SELECT button.
(3) Press TEMPERATURE buttons (TOO WARM or TOO COOL button) to select the desired temperature.
The setting range is 61 - 88°F (16 - 31°C).

1. Cold air prevention control

When the compressor is not operating or is starting, and the temperature of indoor heat exchanger and/or the room temperature is low or when defrosting is being done, the indoor fan will stop or rotate in Very Low speed.

2. High pressure protection

The compressor operational frequency is controlled by the temperature of the indoor heat exchanger to prevent the condensing pressure from increasing excessively.
When the temperature of indoor heat exchanger becomes too high, the high pressure protection works.
The indoor fan operates following the cold air prevention control. This mode continues until the temperature of indoor heat exchanger falls.

3. Defrosting

Defrosting starts when the temperature of outdoor heat exchanger becomes too low.
The compressor stops once, the indoor/outdoor fans stop, the 4-way valve reverses, and the compressor re-starts.
This mode continues until the temperature of outdoor heat exchanger rises or the fixed time passes.

8-4. AUTO VANE OPERATION

1. Horizontal vane

(1) Vane motor drive
These models are equipped with a stepping motor for the horizontal vane. The rotating direction, speed, and angle of the motor are controlled by pulse signals (approximately 12 V) transmitted from indoor microprocessor.
(2) The horizontal vane angle and mode change as follows by pressing VANE CONTROL button.

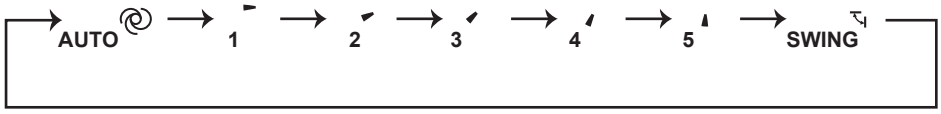

(3) Positioning
To confirm the standard position, the vane moves until it touches the vane stopper. Then the vane is set to the selected angle.
Confirmation of standard position is performed in the following cases:
(a) When the operation starts or finishes (including timer operation).
(b) When the test run starts.
(c) When standby mode (only during multi system operation) starts or finishes.

(4) VANE AUTO (@) mode

In VANE AUTO mode, the microprocessor automatically determines the vane angle to make the optimum room temperature distribution.

MSZ-HM09/12/15NA

In COOL and DRY operation
Vane angle is fixed to Horizontal position.

In HEAT operation
Vane angle is fixed to Angle 5.

MSZ-HM18/24NA

In COOL and DRY operation
Vane angle is fixed to Horizontal position.

In HEAT operation
Vane angle is fixed to Angle 4.

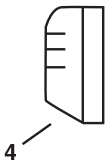

(5) STOP (operation OFF) and ON TIMER standby

In the following cases, the horizontal vane returns to the closed position.

(a) When STOP/OPERATE (OFF/ON) button is pressed (POWER OFF).

(b) When the operation is stopped by the emergency operation.

(c) When ON TIMER is ON standby.

(6) Dew prevention

During COOL or DRY operation with the vane angle at Angle 4 or 5 when the compressor cumulative operation time exceeds 0.5 - 1 hour, the vane angle automatically changes to Angle 2 for dew prevention.

(7) SWING (↖↘) mode

By selecting SWING mode with VANE CONTROL button, the horizontal vane swings vertically.

(8) Cold air prevention in HEAT operation.

The horizontal vane position is set to Upward.

NOTE: When 2 or more indoor units are operated with multi outdoor unit, even if any indoor unit turns thermostat off, this control does not work in the indoor unit.

(9) ECONO COOL (⊜) operation (ECONOmical operation)

When ECONO COOL button is pressed in COOL mode, set temperature is automatically set 4°F (2°C) higher.
Also the horizontal vane swings in various cycle.
SWING operation makes you feel cooler than set temperature. So, even though the set temperature is higher, the air conditioner can keep comfort. As a result, energy can be saved.
ECONO COOL operation is cancelled when ECONO COOL button is pressed once again or VANE CONTROL button is pressed or change to other operation mode.

8-5. TIMER OPERATION (ON/OFF TIMER)

1. How to set the timer

(1) Press STOP/OPERATE (OFF/ON) button to start the air conditioner.

(2) Select the timer mode by pressing the SELECT button during operation.
Each time this button is pressed, the timer mode is changed in sequence:
◴→○ (OFF TIMER) → ◴→ | (ON TIMER) → TIMER RELEASE

(3) Set the time of the timer using the TIME ◴▼ ◴▲ button.
Each time this button is pressed, the set time increase or decrease by 1 hour to 12 hours.

2. To release the timer

Press the SELECT button until ◴→○ (OFF TIMER) and ◴→ | (ON TIMER) are not displayed.

NOTE :

- The OFF TIMER and the ON TIMER cannot be set at the same time.
- The displayed time is the time remaining and will decrease in 1-hour increments as time passes.

8-6. EMERGENCY/TEST OPERATION

In the case of test run operation or emergency operation, use the emergency operation switch on the right side of the indoor unit. Emergency operation is available when the remote controller is missing or has failed, or when the batteries in the remote controller are running down. The unit will start and OPERATION INDICATOR lamp will light up.
The first 30 minutes of operation is the test run operation. This operation is for servicing. The indoor fan runs at High speed and the temperature control does not work.
After 30 minutes of test run operation, the system shifts to EMERGENCY COOL/HEAT MODE with a set temperature of 75°F (24°C). The fan speed shifts to Med.
The coil frost prevention works even in the test run or the emergency operation.
In the test run or emergency operation, the horizontal vane operates in VANE AUTO (@) mode.
Emergency operation continues until the emergency operation switch is pressed once or twice or the unit receives any signal from the remote controller. In the latter case, normal operation will start.

NOTE: Do not press the emergency operation switch during normal operation.

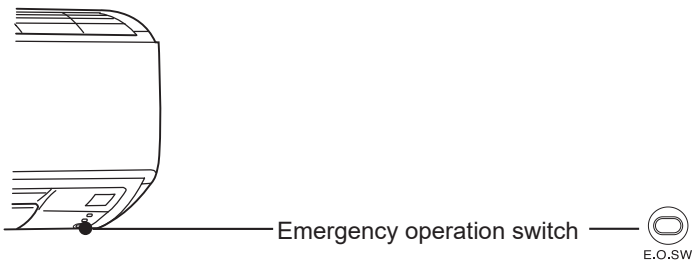

Operation mode	COOL	HEAT
Set temperature	75°F (24°C)	75°F (24°C)
Fan speed	Med.	Med.
Horizontal vane	Auto	Auto

The operation mode is indicated by the Operation Indicator lamp as follows:

Operation Indicator lamp

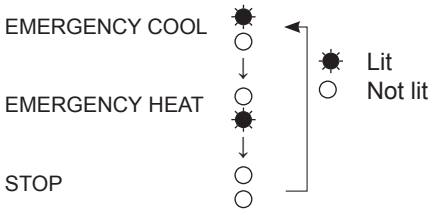

8-7. 3-MINUTE TIME DELAY OPERATION

When the system turns OFF, compressor will not restart for 3 minutes as 3-minute time delay function operates to protect compressor from overload.

8-8. Changing temperature indication (°F/°C)

- The preset unit is °F.
- °F → °C: Press RESET button while the TEMPERATURE buttons are pressed.
- °C → °F: Press RESET button while the TEMPERATURE buttons are pressed.

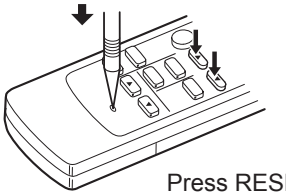

Press RESET button gently using a fine-tipped object.

9 TROUBLESHOOTING

MSZ-HM09NA MSZ-HM12NA MSZ-HM15NA MSZ-HM18NA MSZ-HM24NA

9-1. CAUTIONS ON TROUBLESHOOTING

1. Before troubleshooting, check the following

1) Check the power supply voltage.
2) Check the indoor/outdoor connecting wire for miswiring.

2. Take care of the following during servicing

1) Before servicing the air conditioner, be sure to turn OFF the unit first with the remote controller, and then after confirming the horizontal vane is closed, turn OFF the breaker and/or disconnect the power plug.
2) Be sure to turn OFF the power supply before removing the front panel, the cabinet, the top panel, and the P.C. board.
3) When removing the P.C. board, hold the edge of the board with care NOT to apply stress on the components.
4) When connecting or disconnecting the connectors, hold the connector housing. DO NOT pull the lead wires.

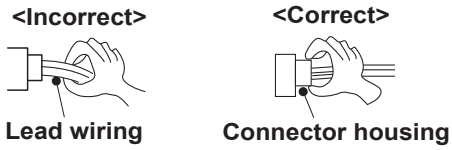

3. Troubleshooting procedure

1) First, check if the OPERATION INDICATOR lamp on the indoor unit is blinking ON and OFF to indicate an abnormality. To make sure, check how many times the OPERATION INDICATOR lamp is blinking ON and OFF before starting service work.
2) Before servicing, verify that all connectors and terminals are connected properly.
3) When the electronic control P.C. board seems to be defective, check for disconnection of the copper foil pattern and burnt or discolored components.
4) When troubleshooting, refer to 9-2, 9-3 and 9-4.

4. How to replace batteries

Weak batteries may cause the remote controller malfunction.
In this case, replace the batteries to operate the remote controller normally.

① Remove the back lid and insert batteries. Then reattach the back lid.

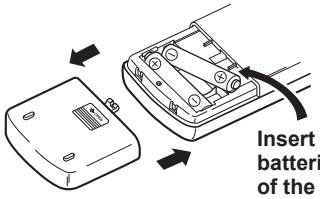

Insert the negative pole of the batteries first. Check if the polarity of the batteries is correct.

② Press RESET button with a fine-tipped object, and then use the remote controller.

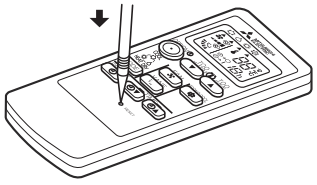

NOTE: 1. If RESET button is not pressed, the remote controller may not operate correctly.
2. This remote controller has a circuit to automatically reset the microprocessor when batteries are replaced. This function is equipped to prevent the microprocessor from malfunctioning due to the voltage drop caused by the battery replacement.
3. Do not use the leaking batteries.

9-2. FAILURE MODE RECALL FUNCTION

Outline of the function

This air conditioner can memorize the abnormal condition which has occurred once.

Even though LED indication listed on the troubleshooting check table (9-4.) disappears, the memorized failure details can be recalled.

1. Flow chart of failure mode recall function for the indoor/outdoor unit

Operational procedure

The cause of abnormality cannot be found because the abnormality does not recur.

Setting up the failure mode recall function

Turn ON the power supply.
<Preparation of the remote controller>
① While pressing both OPERATION SELECT button and TOO COOL button on the remote controller at the same time, press RESET button.
② First, release RESET button.
Hold down the other 2 buttons for another 3 seconds. Make sure that the indicators on the LCD screen shown in the right figure are all displayed.
Then release the buttons.

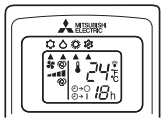

Press STOP/OPERATE (OFF/ON) button of the remote controller (the set temperature is displayed) with the remote controller headed towards the indoor unit. *1

Does upper lamp of OPERATION INDICATOR lamp on the indoor unit blink at the interval of 0.5 seconds?
Blinks: Either indoor or outdoor unit is abnormal.
Beep is emitted at the same timing as the blinking of upper lamp of OPERATION INDICATOR lamp. *2

No (OFF) → Indoor unit is normal.
But the outdoor unit might be abnormal because there are some abnormalities that cannot be recalled with this way.
Check if outdoor unit is abnormal according to the detailed outdoor unit failure mode recall function.

*1 Regardless of normal or abnormal condition, a short beep is emitted once the signal is received.

Yes (Blinks)

Judgment of indoor/outdoor abnormality

Before blinking, does upper lamp of OPERATION INDICATOR lamp stay ON for 3 seconds?
When it stays ON for 3 seconds (without beep): The outdoor unit is abnormal.

Yes → The outdoor unit is abnormal.
Check the blinking pattern, and identify the abnormal point by referring to the table of outdoor unit failure mode recall function.
(Refer to outdoor unit service manual.)
Make sure to check at least 2 consecutive blinking cycles. *3

No → The indoor unit is abnormal.
Check the blinking pattern, and identify the abnormal point by referring to the table of indoor unit failure mode recall function. (Refer to 9-2.2)
Make sure to check at least 2 consecutive blinking cycles. *2

Releasing the failure mode recall function

Release the failure mode recall function by the following procedures.
Turn OFF the power supply and turn it ON again.
Press RESET button of the remote controller.

Repair the failure parts.

Deleting the memorized abnormal condition

① After repairing the unit, recall the failure mode again according to "Setting up the failure mode recall function" mentioned above.
② Press STOP/OPERATE (OFF/ON) button of the remote controller (the set temperature is displayed) with the remote controller headed towards the indoor unit.
③ Press the emergency operation switch so that the memorized abnormal condition is deleted.
④ Release the failure mode recall function according to "Releasing the failure mode recall function" mentioned above.

NOTE: 1. Make sure to release the failure mode recall function after it is set up, otherwise the unit cannot operate properly.
2. If the abnormal condition is not deleted from the memory, the last abnormal condition is kept memorized.

*2. Blinking pattern when the indoor unit is abnormal:

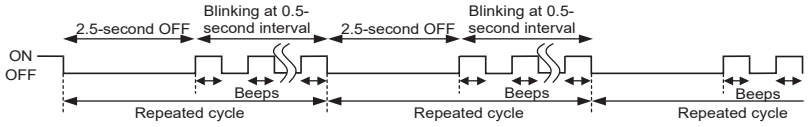

*3.Blinking pattern when the outdoor unit is abnormal:

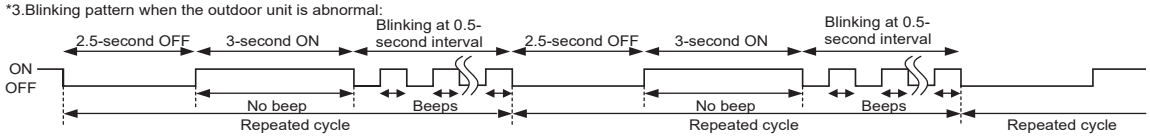

2. Table of indoor unit failure mode recall function

Upper lamp of OPERATION INDICATOR lamp	Abnormal point (Failure mode)	Condition	Remedy
Not lit	Normal	—	—
1-time blink every 0.5-second	Room temperature thermistor	The room temperature thermistor short or open circuit is detected every 8 seconds during operation.	Refer to the characteristics of the room temperature thermistor (9-7.).
2-time blink 2.5-second OFF	Indoor coil thermistor	The indoor coil thermistor short or open circuit is detected every 8 seconds during operation.	Refer to the characteristics of the main indoor coil thermistor, the sub indoor coil thermistor (9-7.).
3-time blink 2.5-second OFF	Serial signal	The serial signal from outdoor unit is not received for a maximum of 6 minutes.	Refer to 9-6.Ⓓ "How to check miswiring and serial signal error".
11-time blink 2.5-second OFF	Indoor fan motor	The rotational frequency feedback signal is not emitted for 12 seconds after the indoor fan motor is operated.	Refer to 9-6.Ⓐ "Check of indoor fan motor".
12-time blink 2.5-second OFF	Indoor control system	It cannot properly read data in the nonvolatile memory of the indoor electronic control P.C. board.	Replace the indoor electronic control P.C. board.

NOTE: Blinking patterns of this mode differ from the ones of TROUBLESHOOTING CHECK TABLE (9-4.).

9-3. INSTRUCTION OF TROUBLESHOOTING

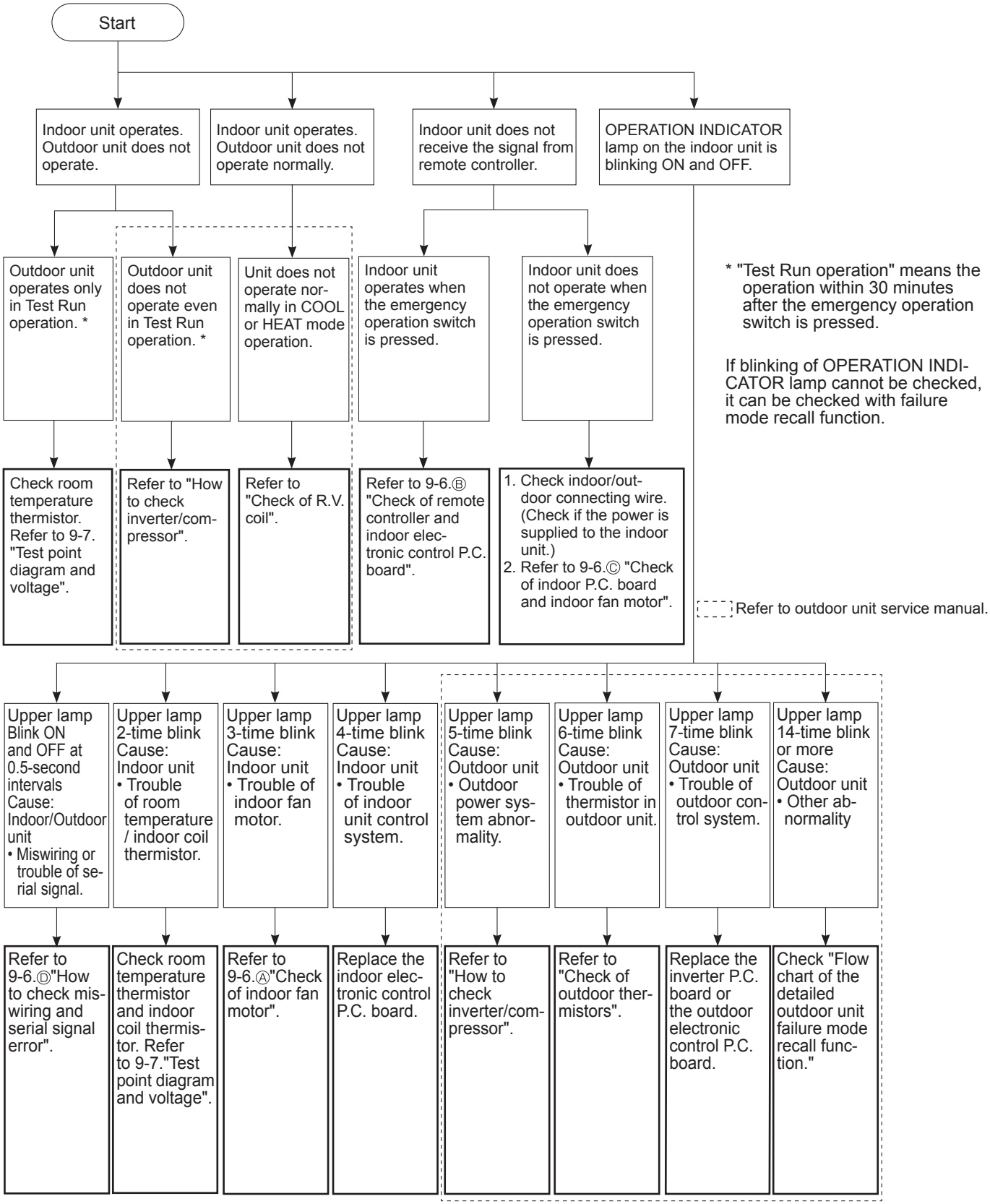

9-4. TROUBLESHOOTING CHECK TABLE

Before taking measures, make sure that the symptom reappears for accurate troubleshooting.
When the indoor unit has started operation and detected an abnormality of the following condition (the first detection after the power ON), the indoor fan motor turns OFF and OPERATION INDICATOR lamp blinks.

OPERATION INDICATOR

☼	● Lit
○	☼ Blinking
	○ Not lit

No.	Abnormal point	Operation indicator lamp	Symptom	Condition	Remedy
1	Miswiring or serial signal	Upper lamp blinks. 0.5-second ON ●○●○●○●○ 0.5-second OFF	Indoor unit and outdoor unit do not operate.	The serial signal from the outdoor unit is not received for 6 minutes.	• Refer to 9-6. Ⓓ "How to check miswiring and serial signal error".
2	Indoor coil thermistor Room temperature thermistor	Upper lamp blinks. 2-time blink ●○●○○○○○●○●○○ 2.5-second OFF		The indoor coil or the room temperature thermistor is short or open circuit.	• Refer to the characteristics of indoor coil thermistor, and the room temperature thermistor (9-7.).
3	Indoor fan motor	Upper lamp blinks. 3-time blink ●○●○●○○○○○●○●○●○○○ 2.5-second OFF		The rotational frequency feedback signal is not emitted during the indoor fan operation.	• Refer to 9-6. Ⓐ "Check of indoor fan motor".
4	Indoor control system	Upper lamp blinks. 4-time blink ●○●○●○●○○○○○●○●○●○● 2.5-second OFF		It cannot properly read data in the nonvolatile memory of the indoor electronic control P.C. board.	• Replace the indoor electronic control P.C. board.
5	Outdoor power system	Upper lamp blinks. 5-time blink ●○●○●○●○●○○○○○●○●○ 2.5-second OFF		It consecutively occurs 3 times that the compressor stops for overcurrent protection or start-up failure protection within 1 minute after start-up.	• Refer to "How to check of inverter/compressor". Refer to outdoor unit service manual • Check the stop valve.
6	Outdoor thermistors	Upper lamp blinks. 6-time blink ●○●○●○●○●○○○○○●○ 2.5-second OFF		The outdoor thermistors short or open circuit during the compressor operation.	• Refer to "Check of outdoor thermistor". Refer to outdoor unit service manual.
7	Outdoor control system	Upper lamp blinks. 7-time blink ●○●○●○●○●○●○○○○○● 2.5-second OFF		It cannot properly read data in the nonvolatile memory of the inverter P.C. board or the outdoor electronic control P.C. board.	• Replace the inverter P.C. board or the outdoor electronic control P.C. board. Refer to outdoor unit service manual.
8	Other abnormality	Upper lamp blinks. 14-time blink or more ●○●○●○●○●○●○●○●○●○●○●○●○●○●○○○○○● 2.5-second OFF		An abnormality other than above mentioned is detected.	• Check the stop valve. • Check the 4-way valve. • Check the abnormality in detail using the failure mode recall function for outdoor unit.
9	Outdoor control system	Upper lamp lights up. ●	Outdoor unit does not operate	It cannot properly read data in the nonvolatile memory of the inverter P.C. board or the outdoor electronic control P.C. board.	• Check the blinking pattern of the LED on the inverter P.C. board or the outdoor electronic control P.C. board.

9-5. TROUBLESHOOTING CRITERION OF MAIN PARTS

MSZ-HM09NA MSZ-HM12NA MSZ-HM15NA MSZ-HM18NA MSZ-HM24NA

<table>
<tr><th>Part name</th><th>Check method and criterion</th><th>Figure</th></tr>
<tr><td>Room temperature thermistor (RT11)
Indoor coil thermistor (RT12, RT13)</td><td>Measure the resistance with a multimeter.

Refer to 9-7. "Test point diagram and voltage", 1 or 2. "Indoor electronic control P.C. board", for the chart of thermistor.</td><td></td></tr>
<tr><td>Indoor fan motor (MF)</td><td>Check 9-6.Ⓐ</td><td></td></tr>
<tr><td>Horizontal vane motor (MV)</td><td>Measure the resistance between the terminals with a multimeter.
(Part temperature 50 - 86°F (10 - 30°C))
<table><tr><th>Color of the lead wire</th><th>Normal</th></tr><tr><td>RED-BLK</td><td>223 - 268 Ω</td></tr></table></td><td> 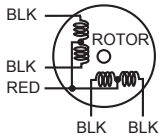
</td></tr>
</table>

9-6. TROUBLESHOOTING FLOW

Ⓐ Check of indoor fan motor

The indoor fan motor error has occurred, and the indoor fan does not operate.

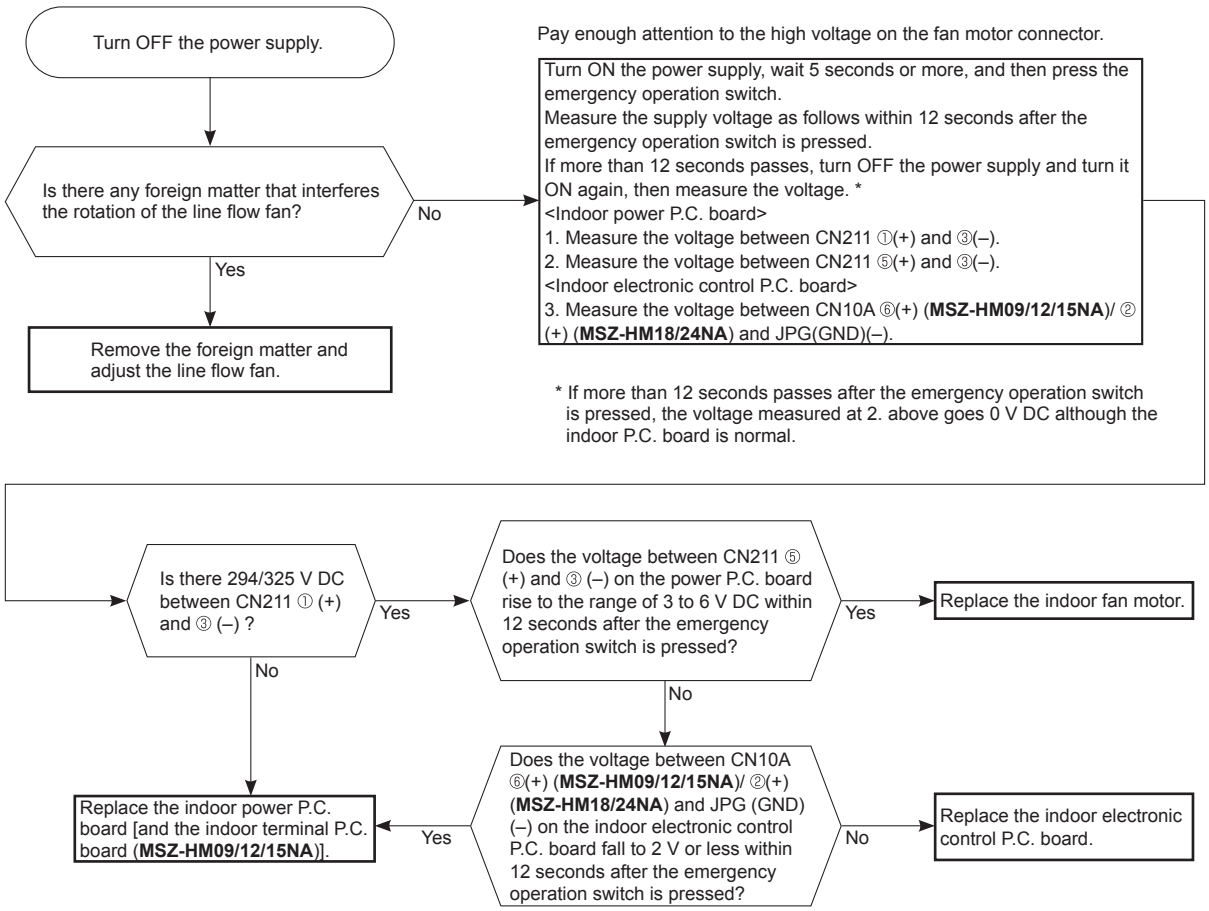

The indoor fan motor error has occurred, and the indoor fan repeats "12-second ON and 30-second OFF" 3 times, and then stops.

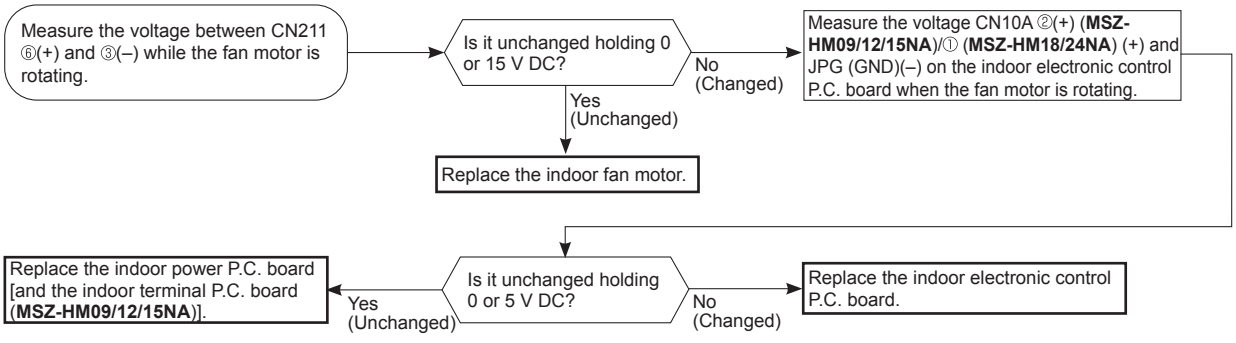

Ⓑ Check of remote controller and indoor electronic control P.C. board

*Check if the remote controller is exclusive for this air conditioner.

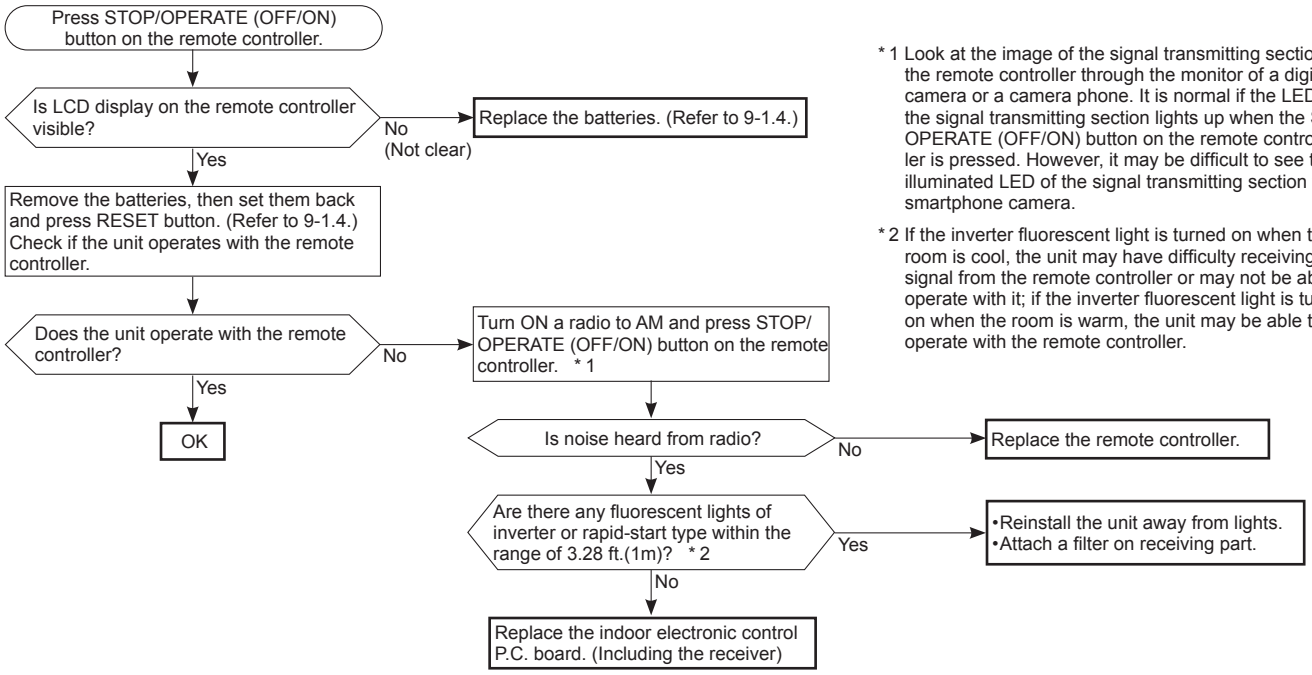

* 1 Look at the image of the signal transmitting section of the remote controller through the monitor of a digital camera or a camera phone. It is normal if the LED of the signal transmitting section lights up when the STOP/ OPERATE (OFF/ON) button on the remote controller is pressed. However, it may be difficult to see the illuminated LED of the signal transmitting section with a smartphone camera.

* 2 If the inverter fluorescent light is turned on when the room is cool, the unit may have difficulty receiving the signal from the remote controller or may not be able to operate with it; if the inverter fluorescent light is turned on when the room is warm, the unit may be able to operate with the remote controller.

Ⓒ Check of indoor P.C. board and indoor fan motor

Turn OFF the power supply.
Remove indoor fan motor connector CN211 from indoor power P.C. board and vane motor connector CN151 from the indoor electronic control P.C. board and turn ON the power supply.

Does the unit operate with the remote controller?
Does OPERATION INDICATOR lamp light up by pressing the emergency operation switch?

Yes → Measure the resistance between CN211 ③ and ④ of the indoor fan motor connector. → Short/open circuit: Replace the indoor fan motor.

Yes → Measure the resistance of the vane motor coil. (Refer to 9-5.) → Short/open circuit: Replace the vane motor and the indoor electronic control P.C. board.

No → Turn OFF the power supply. Check both "parts side" and "pattern side" of the indoor power P.C. board visually.

Is the varistor (NR11) burnt and the fuse (F11) blown?
Yes → Replace the varistor (NR11) and fuse (F11). * 3
No

Be sure to check both the fuse and the varistor in any case.

Is the fuse (F11) blown only?
No
Yes → Measure the resistance between CN211 ①(+) and ③(-) of indoor fan motor connector. * 1, * 2

Is the resistance 1MΩ or more?
No → Replace the fuse (F11) and the indoor fan motor. * 3
Yes → Replace the fuse (F11). * 3

* 1. The fan motor connector's ① lead wire is red, whereas ③ is black.
* 2. Connect "+" of the multimeter to fan motor connector's ① lead wire, and "-" to ③ lead wire, otherwise the resistance cannot be measured properly.
* 3. Please replace the fuse after removing the indoor power P.C. board from the electrical box.

Measure the resistance of resistor (R111) on the indoor power P.C. board.

Is there resistance of resistor (R111) approximately 4 Ω?
No → Replace the indoor power P.C. board and the indoor fan motor [and the indoor terminal P.C. board (**MSZ-HM09/12/15NA**)].
Yes

Is there approximately 5 V DC between 5 V (+) and GND (-) of the indoor electronic control P.C. board? Is there approximately 9 V to 13 V DC between 12 V (+) and GND (-) of the indoor electronic control P.C. board?
Yes → Replace the indoor fan motor.
No

Is the connector CN10A on the indoor electronic control P.C. board or lead wires disconnected?
Yes → Connect the connector CN10A or repair disconnection.
No → Replace the indoor electronic control P.C. board.

MSZ-HM09/12/15NA

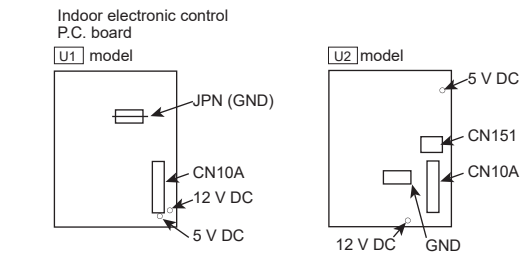

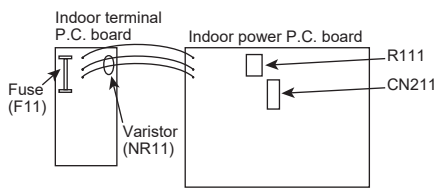

MSZ-HM18/24NA

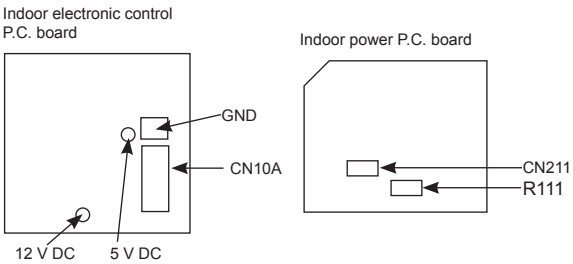

Ⓓ How to check miswiring and serial signal error

MSZ-HM09/12/15NA

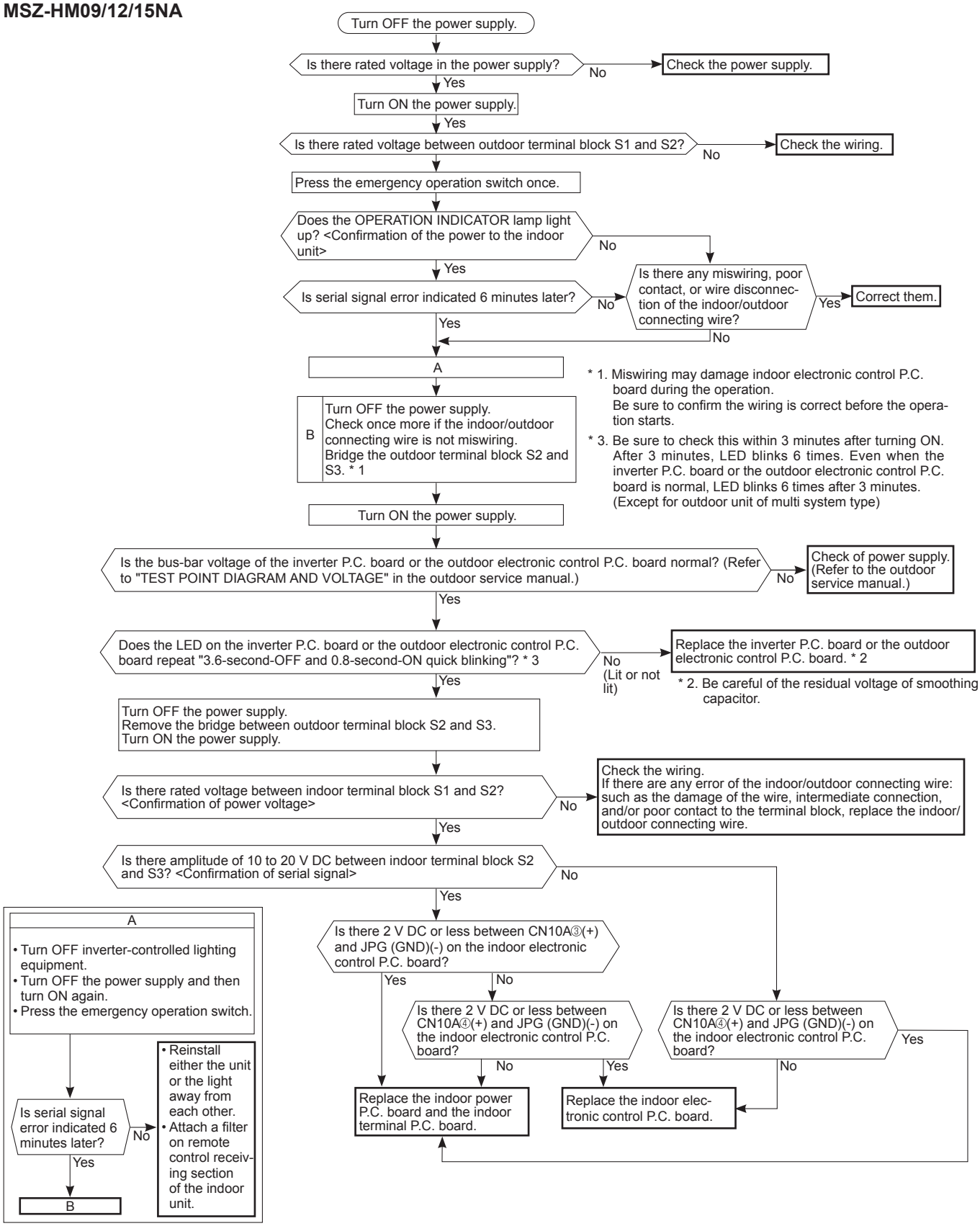

MSZ-HM18/24NA

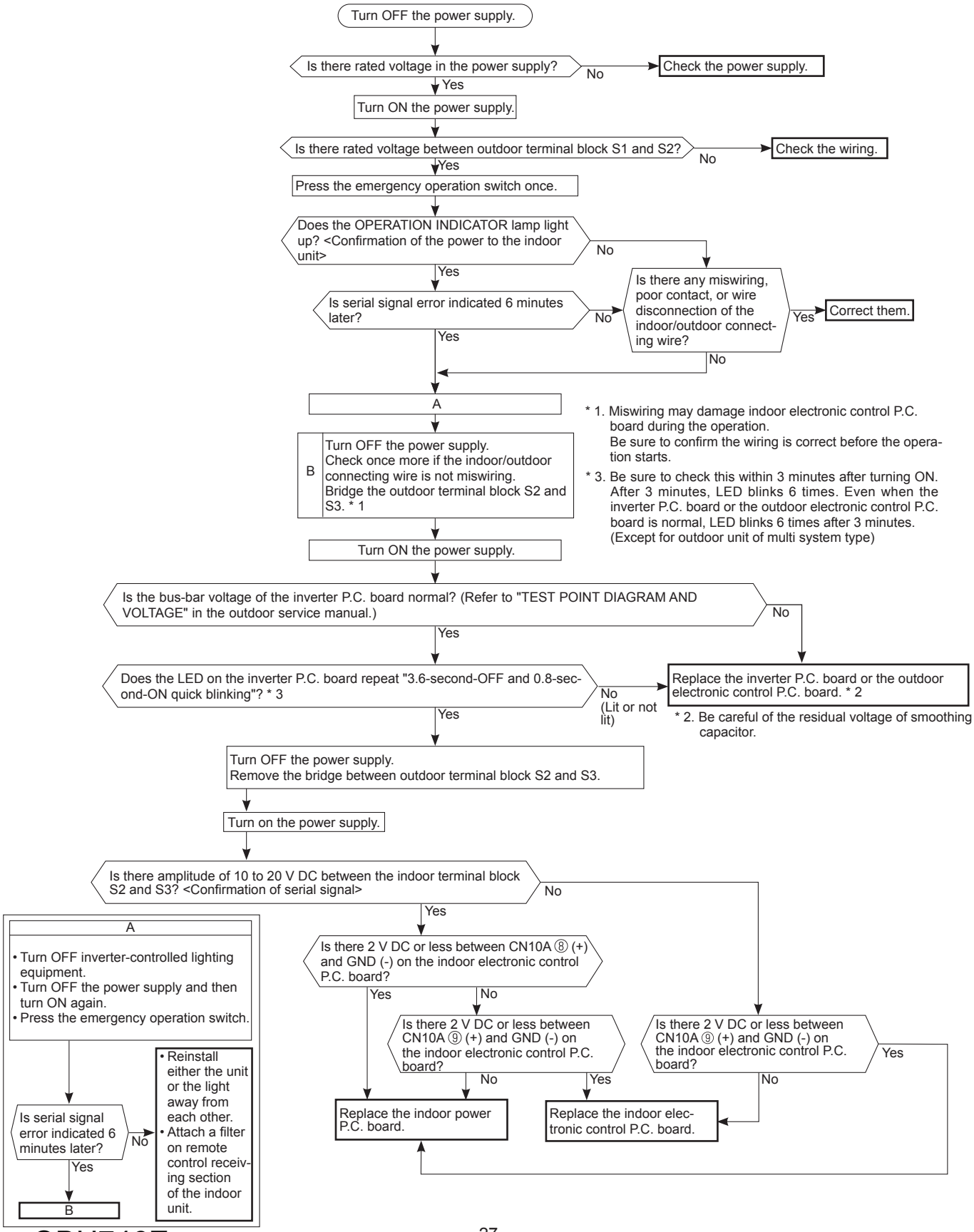

Ⓔ Electromagnetic noise enters into TV sets or radios

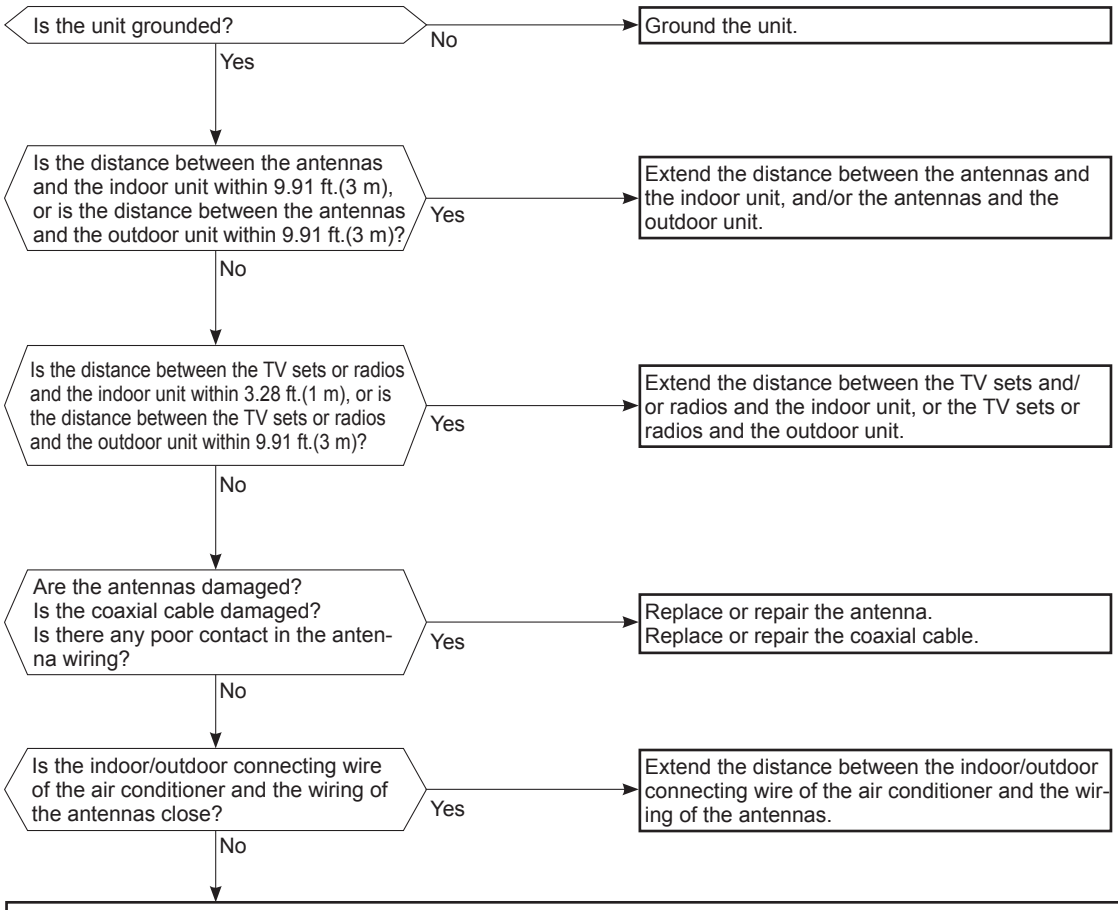

Even if all of the above conditions are fulfilled, the electromagnetic noise may enter, depending on the electric field strength or the installation condition (combination of specific conditions such as antennas or wiring).
Check the followings before asking for service.

1. Devices affected by the electromagnetic noise
   TV sets, radios (FM/AM broadcast, shortwave)
2. Channel, frequency, broadcast station affected by the electromagnetic noise
3. Channel, frequency, broadcast station unaffected by the electromagnetic noise
4. Layout of:
   indoor/outdoor unit of the air conditioner, indoor/outdoor wiring, grounding wire, antennas, wiring from antennas, receiver
5. Electric field intensity of the broadcast station affected by the electromagnetic noise
6. Presence or absence of amplifier such as booster
7. Operation condition of air conditioner when the electromagnetic noise enters in
   1) Turn OFF the power supply once, and then turn ON the power supply. In this situation, check for the electromagnetic noise.
   2) Within 3 minutes after turning ON the power supply, press STOP/OPERATE (OFF/ON) button on the remote controller for power ON, and check for the electromagnetic noise.
   3) After a short time (3 minutes later after turning ON), the outdoor unit starts running. During operation, check for the electromagnetic noise.
   4) Press STOP/OPERATE (OFF/ON) button on the remote controller for power OFF, when the outdoor unit stops but the indoor/outdoor communication still runs on. In this situation, check for the electromagnetic noise.

9-7. Test point diagram and voltage

MSZ-HM09NA - U1 MSZ-HM12NA - U1 MSZ-HM15NA - U1

1. Indoor power P.C. board, Indoor terminal P.C. board

Indoor terminal P.C. board **Indoor power P.C. board**

Fuse (F11)(*)

Varistor (NR11)

Resistor (R111) approximately 4 Ω

Indoor fan motor (CN211)
⑥ (+)0-6 V
⑤ (+)3-6 V DC
④ 15 V DC
③ (–) GND (high-voltage DC)
① 294/325 V DC

Terminal block

Connector to indoor electronic control P.C. board (CN20A)

5 V DC GND

12 V DC

* Please replace the fuse after removing the indoor terminal P.C. board from the electrical box.

2. Indoor electronic control P.C. board

Timer short mode point JPG JPS (Refer to 7-1.)

Room temperature thermistor RT11 (CN111)

Indoor coil thermistor RT12, RT13 (CN112)

GND

Vane motor (CN151)

Connector to Indoor power P.C. board (CN10A)

12 V DC

5 V DC

Emergency operation switch (SW1)

To disable "Auto restart function", solder the Jumper wire to JR07. (Refer to 7-3.)

Room temperature thermistor (RT11)
Indoor coil thermistor (RT12, RT13)

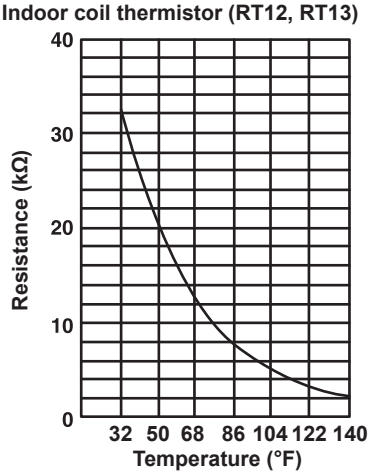

MSZ-HM09NA - U2 MSZ-HM12NA - U2 MSZ-HM15NA - U2

1. Indoor power P.C. board, Indoor terminal P.C. board

Indoor terminal P.C. board **Indoor power P.C. board**

Fuse (F11)(*)

Varistor (NR11)

Resistor (R111) approximately 4 Ω

Indoor fan motor (CN211)

⑥ (+)0-6 V

⑤ (+)3-6 V DC

④ 15 V DC

③ (–) GND (high-voltage DC)

① 294/325 V DC

Terminal block

GND

5 V DC

Connector to indoor electronic control P.C. board (CN20A)

12 V DC

* Please replace the fuse after removing the indoor terminal P.C. board from the electrical box.

2. Indoor electronic control P.C. board

Room temperature thermistor RT11 (CN111)

5 V DC

Indoor coil thermistor RT12, RT13 (CN112)

Vane motor (CN151)

Connector to Indoor power P.C. board (CN10A)

GND

12 V DC

Emergency operation switch (SW1)

Timer short mode point (Refer to 7-1.)

To disable "Auto restart function", solder the Jumper wire to JR07. (Refer to 7-3.)

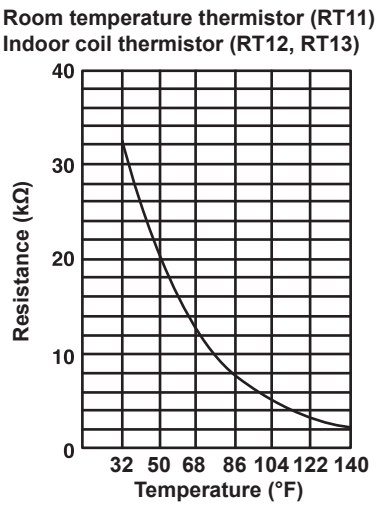

MSZ-HM18NA MSZ-HM24NA

1. Indoor power P.C. board

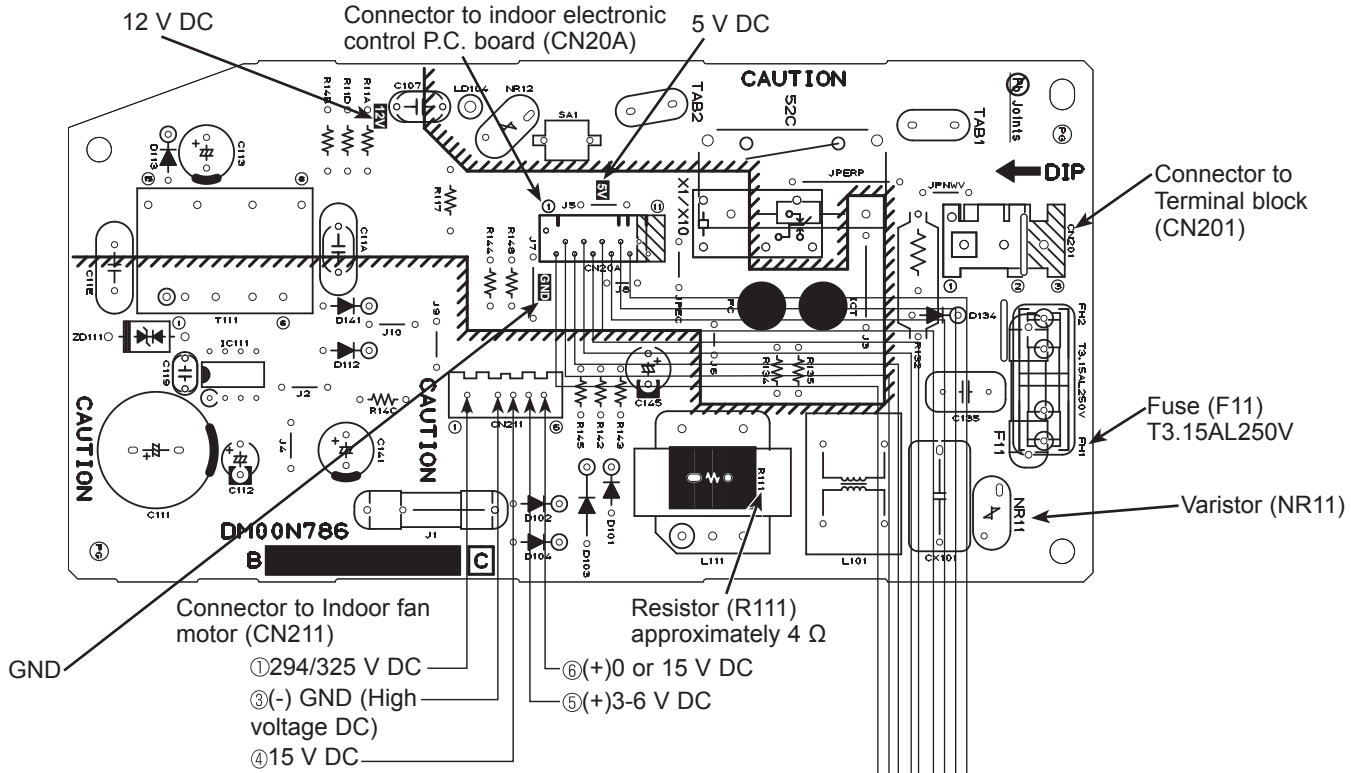

2. Indoor electronic control P.C. board

Room temperature thermistor RT11 (CN111)

To disable "Auto restart function",cut the Jumper wire to JR77. (Refer to 7-3.)

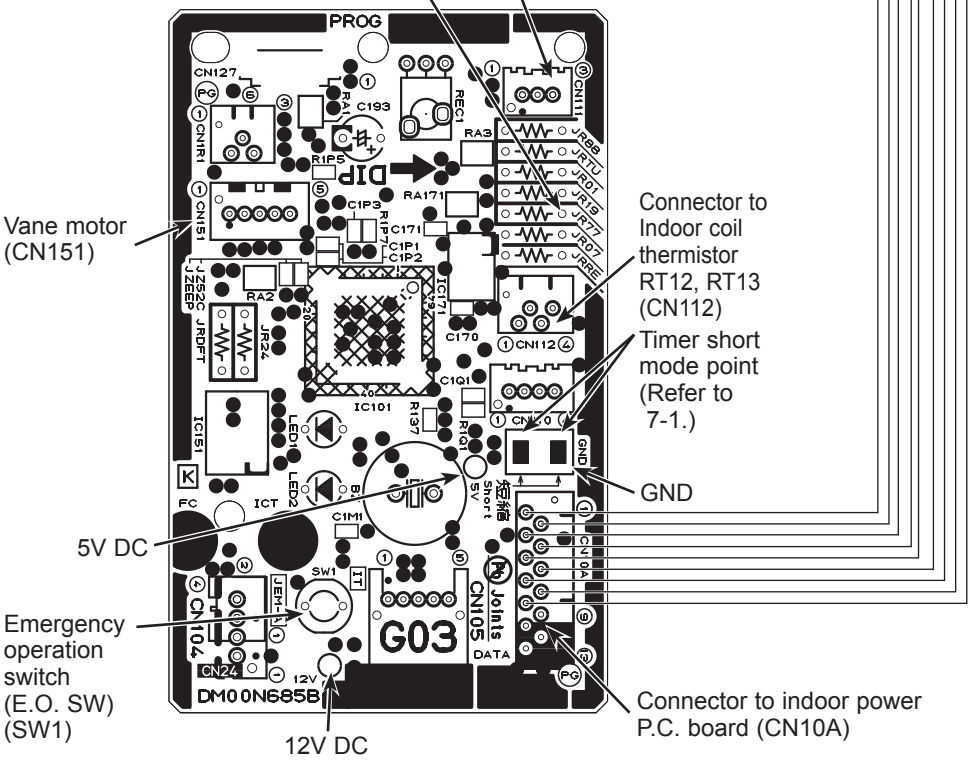

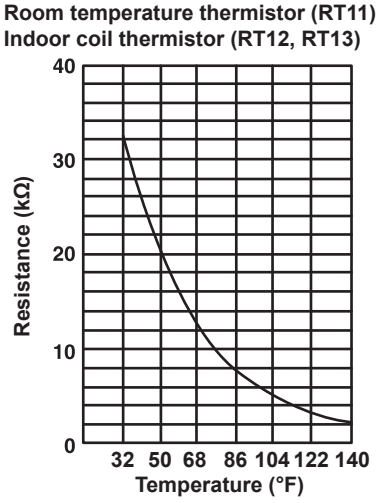

10 DISASSEMBLY INSTRUCTIONS

<Detaching method of the terminal with locking mechanism>

The terminal which has the locking mechanism can be detached as shown below.
There are 2 types of the terminal with locking mechanism.
The terminal without locking mechanism can be detached by pulling it out.
Check the shape of the terminal before detaching.

(1) Slide the sleeve and check if there is a locking lever or not.

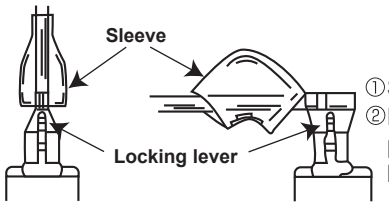

①Slide the sleeve.
②Pull the terminal while pushing the locking lever.

(2) The terminal with the connector shown below has the locking mechanism.

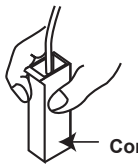

①Hold the sleeve, and pull out the terminal slowly.

10-1. MSZ-HM09NA MSZ-HM12NA MSZ-HM15NA

NOTE: Turn OFF the power supply before disassembly.

——→: Indicates the visible parts in the photos/figures.
- - - →: Indicates the invisible parts in the photos/figures.

OPERATING PROCEDURE	PHOTOS/FIGURES
1. Removing the panel (1) Remove the horizontal vanes. (2) Remove the screw caps of the panel. Remove the screws of the panel. (3) Unhook the lower part (Ⓐ) of the panel. (4) Hold the lower part of both ends of the panel and pull it slightly toward you, and then remove the panel by pushing it upward.	**Photo 1** 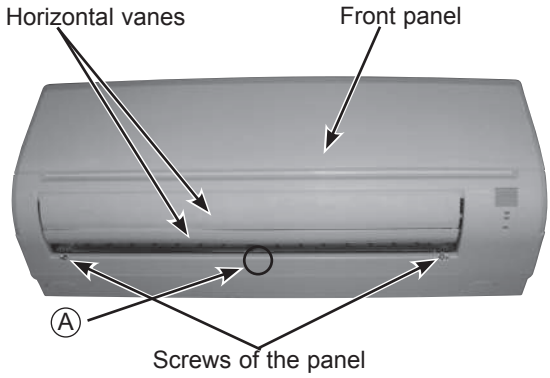

OPERATING PROCEDURE	PHOTOS/FIGURES

2. Removing the indoor electronic control P.C. board and the room temperature thermistor

(1) Remove the panel (Refer to section 1.) and the corner box.
(2) Remove the screw of the V.A. clamp and the V.A. clamp.
(3) Loosen the screw of the indoor/outdoor connecting wire and remove the indoor/outdoor connecting wire.
(4) Remove the screw of the electrical cover and the electrical cover.
(5) Open the indoor electronic control P.C. board holder (to right side)
(6) Disconnect the following connectors:
<Indoor electronic control P.C. board>
CN112 (Indoor coil thermistor)
CN151 (Vane motor)
CN10A (To the indoor power P.C. board)
(7) Unhook the catches of the indoor electronic control P.C. board holder from the nozzle and the electrical box (right side).
(8) Remove the indoor electronic control P.C. board holder from the conduit cover.
(9) Remove the room temperature thermistor from the hook of the indoor electronic control P.C. board holder.
(10) Open the back side of the indoor electronic control P.C. board holder, and remove the indoor electronic control P.C. board.
(11) Remove the room temperature thermistor from the indoor electronic control P.C. board.

3. Removing the indoor power P.C. board, the indoor terminal P.C. board, and the electrical box

(1) Remove the panel (Refer to section 1.) and the corner box.
(2) Remove the indoor/outdoor connecting wire and the indoor electric control P.C. board holder. (Refer to section 2 (2)-(8).).
(3) Remove the screw of the conduit cover and the conduit cover.
(4) Remove the screw of the conduit plate and the conduit plate.
(5) Remove the ground wire connected to the indoor heat exchanger from the electrical box.
(6) Remove the screw fixing the electrical box.
(7) Unhook first the lower, then the upper catches of the electrical box, and pull out the electrical box.
(8) Disconnect all the connectors on the indoor power P.C. board and unhook all lead wires.
(9) Remove the screw of terminal block on the indoor terminal P.C. board.
(10) Remove the indoor power P.C. board and the indoor terminal P.C. board.

Photo 2

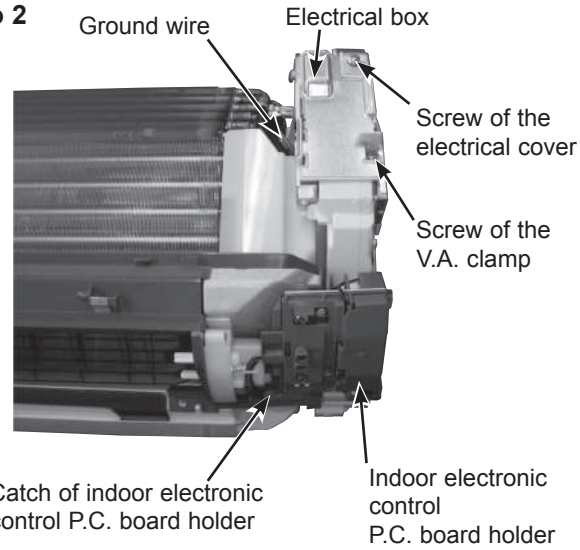

Photo 3

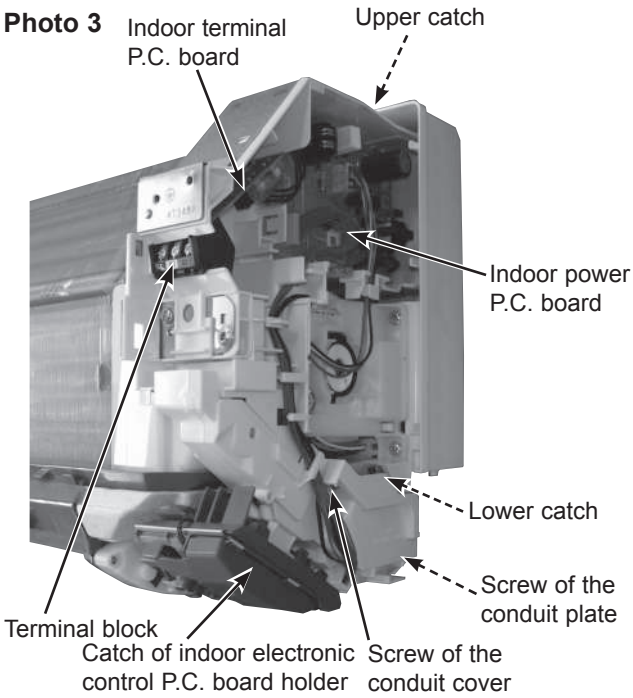

Photo 4

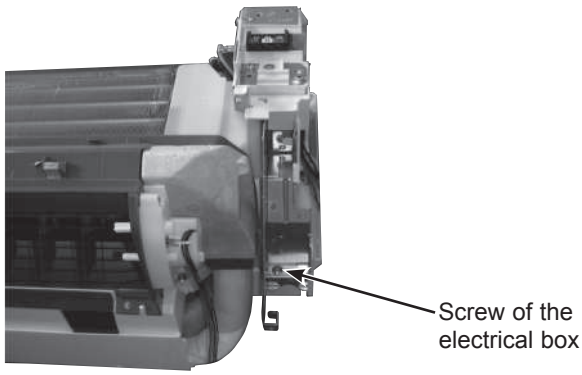

OPERATING PROCEDURE	PHOTOS/FIGURES
4. Removing the nozzle assembly (1) Remove the panel (Refer to section 1.) and the corner box. (2) Remove the indoor/outdoor connecting wire (Refer to section 2 (2)-(7).). (3) Remove the indoor electronic control P.C. board holder. (4) Pull out the drain hose from the nozzle assembly and remove the nozzle assembly.	**Photo 5**
5. Removing the horizontal vane motor (1) Remove the nozzle assembly. (Refer to section 5.) (2) Remove the screws of the horizontal vane motor unit. (3) Disconnect the connector from the horizontal vane motor. (4) Remove the screws of the horizontal vane motor. (5) Remove the horizontal vane motor from the horizontal vane motor unit.	 Screws of horizontal vane motor unit

OPERATING PROCEDURE	PHOTOS/FIGURES

6. Removing the indoor fan motor, the indoor coil thermistor, and the line flow fan

(1) Remove the panel (Refer to section 1.) and the corner box.
(2) Remove the indoor electronic control P.C. board holder, the electrical box and the nozzle assembly.
(3) Remove the screws fixing the motor bed.
(4) Loosen the screw fixing the line flow fan.
(5) Remove the motor bed together with fan motor and motor band.
(6) Release the hooks of the motor band. Remove the motor band. Pull out the indoor fan motor.
(8) Remove the indoor coil thermistor from the heat exchanger.
(*) Install the indoor coil thermistor in its former position when assembling it. (Photo 9)
(9) Remove the screws fixing the left side of the heat exchanger.
(10) Lift the heat exchanger, and pull out the line flow fan to the lower-left.
* When attaching the line flow fan, screw the line flow fan so 5/32 inch (4 mm) gap is provided between the right end of the line flow fan and the right wall of the air passage of the box (Figure 1).

Figure 1

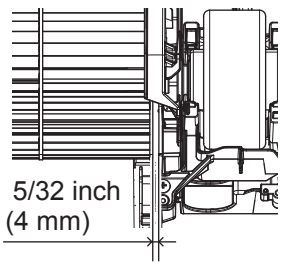

Photo 6

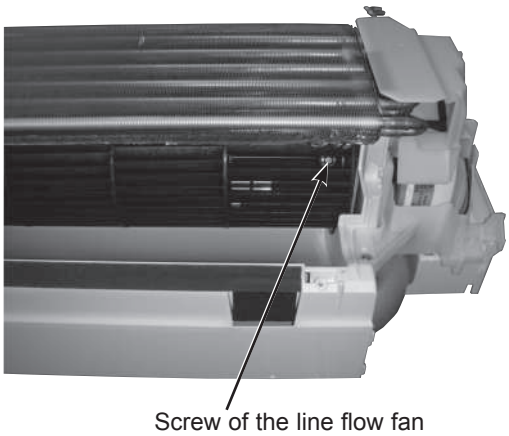

Photo 7

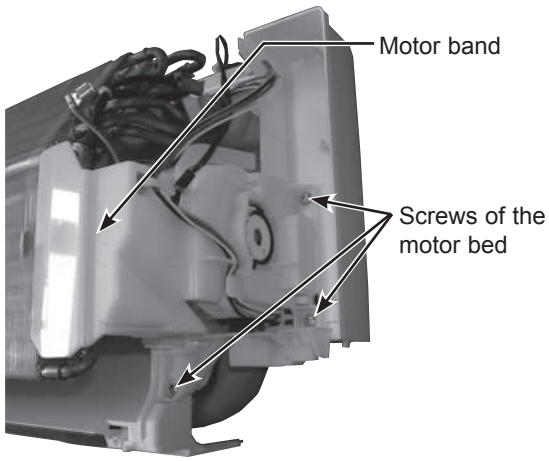

Photo 9

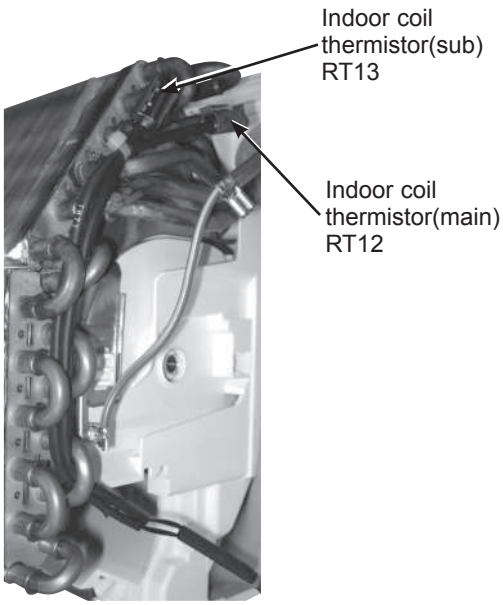

Photo 8

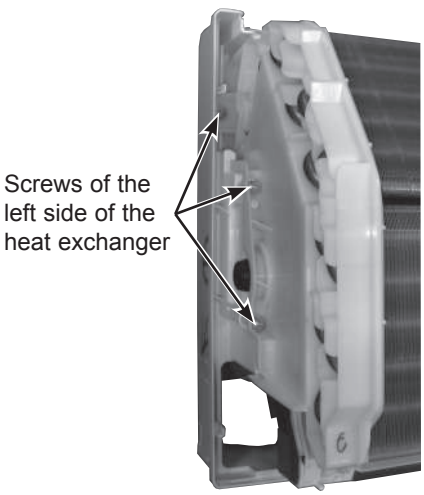

10-2. MSZ-HM18NA MSZ-HM24NA

NOTE: Turn OFF the power supply before disassembly.

OPERATING PROCEDURE	PHOTOS/FIGURES
1. Removing the panel (1) Remove the screw caps on the panel and remove the screws of the panel. (2) Pull the panel slightly toward you, and then remove the panel by pushing it upward.	**Photo 1** 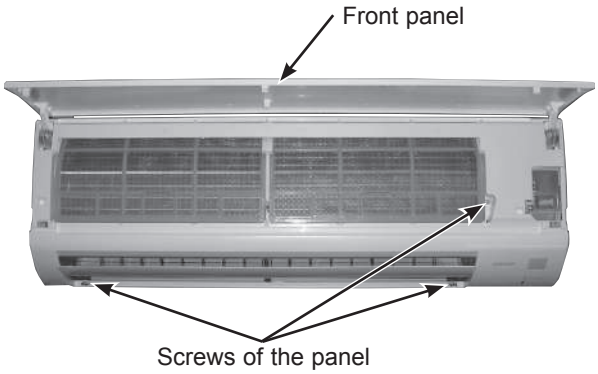

OPERATING PROCEDURE

2. Removing the indoor power P.C. board and the electrical box

(1) Remove the panel. (Refer to section 1.) Remove the right corner box.
(2) Disconnect the following connectors:
<Indoor electronic control P.C. board>
CN151 (Vane motor)
CN112 (Indoor coil thermistor)
CN10A (To the indoor power P.C. board)

(3) Unhook the catch on the left side of the control P.C. board holder. Pull the control P.C. board holder as if opening the door at 90 degrees. Remove the control P.C. board holder from the axial rod on the electrical box.
(4) Remove the screw of the V.A. clamp.
(5) Remove the V.A. clamp and the indoor/outdoor connecting wire.
(6) Remove the screw of the conduit cover and the conduit cover.
(7) Remove the screw of the conduit plate and the conduit plate.
(8) Remove the screw fixing the electrical box.
(9) Remove the screws of the ground plate. (Photo 2)
(10) Remove the indoor coil thermistor from the water cover.
(11) Disengage the hooks of the water cover and remove the water cover.
(12) Remove the screw of the electrical cover and remove the electrical cover.
(13) Disconnect the CN211 (Indoor fan motor) from the indoor power P.C. board.
(14) Remove the upper catch of the electrical box, and pull out the electrical box.
* To attach the electrical box, pass the wires connecting the indoor power P.C. board and the indoor electronic control P.C. board through Ⓐ. Pass the lead wires of the fan motor through Ⓑ as shown in the Photo 3.
(15) Disconnect the following connectors.
<Indoor power P.C. board>
CN201 (Terminal block)
CN20A (To the indoor electronic control P.C. board)

Photo 4

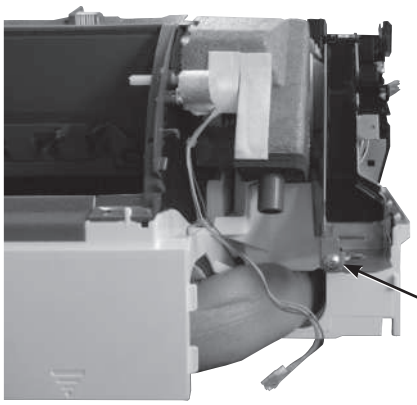

PHOTOS/FIGURES

Photo 2

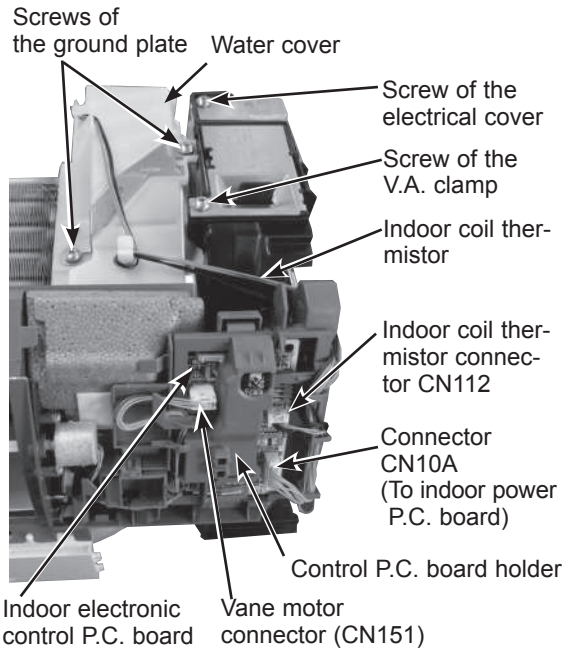

Photo 3

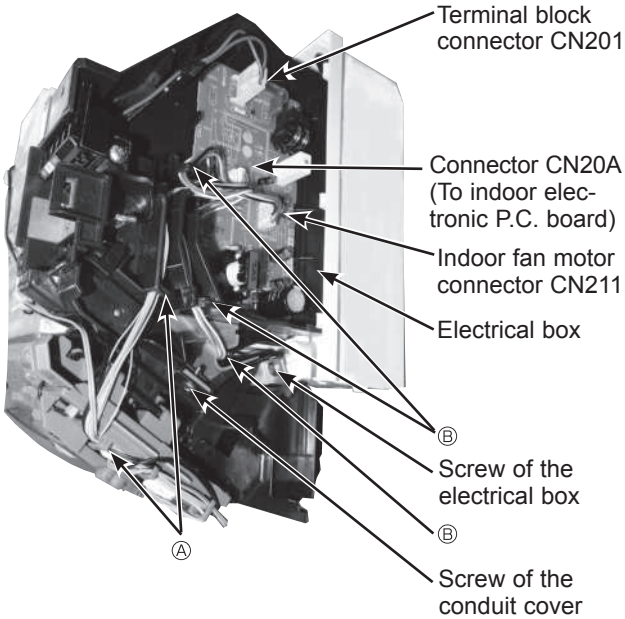

OPERATING PROCEDURE	PHOTOS/FIGURES
3. Removing the indoor electronic control P.C. board (1) Remove the panel. (Refer to section 1.) Remove the right corner box. (2) Disconnect the following connectors: <Indoor electronic control P.C. board> CN151 (Vane motor) CN112 (Indoor coil thermistor) CN10A (To the indoor power P.C. board) (3) Unhook the catch on the left side of the control P.C. board holder. Pull the control P.C. board holder as if opening the door at 90 degrees. Remove the control P.C. board holder from the axial rod on the electrical box. (4) Remove the room temperature thermistor from the back side of the control P.C. board holder. (5) Unhook the catches of the control P.C. board holder, and open the control P.C. board holder. (6) Remove the indoor electronic control P.C. board from the control P.C. board holder.	**Photo 5** **Control P.C. board holder (Inside)** 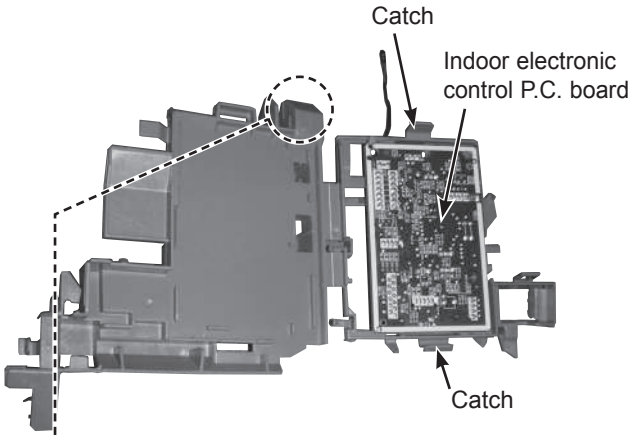 **Control P.C. board holder (Back side)** 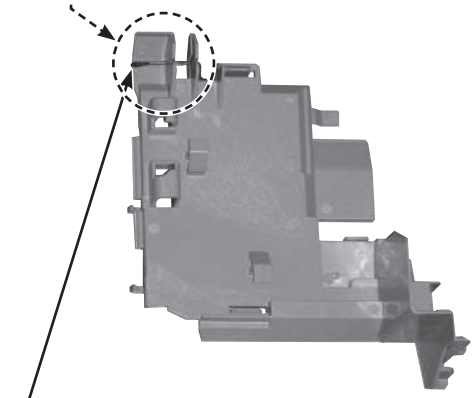 Room temperature thermistor
4. Removing the vane motor (1) Remove the panel. (Refer to section 1.) Remove the corner box. (2) Remove the control P.C. board holder, water cover and the electrical box. (Refer to section 2.) (3) Pull out the drain hose from the nozzle assembly and remove the nozzle assembly. (4) Remove the screws of the vane motor and remove the vane motor. (5) Disconnect the connector from the vane motor.	**Photo 6** 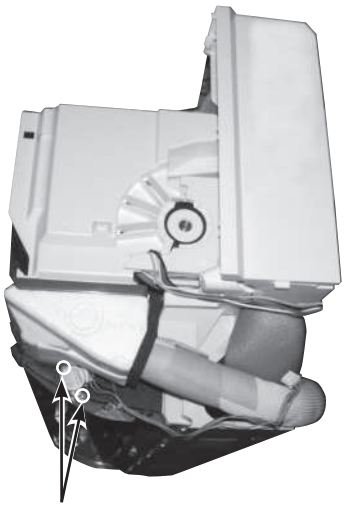 Screws of the vane motor

OPERATING PROCEDURE	PHOTOS/FIGURES

5. Removing the indoor fan motor, the indoor coil thermistor and the line flow fan

(1) Remove the panel. (Refer to section 1.) Remove the right corner box.
(2) Remove the control P.C. board holder, the water cover, the electrical box and the nozzle assembly. (Refer to section 2.)
(3) Remove the screws fixing the motor bed.
(4) Loosen the screw fixing the line flow fan.
(5) Remove the motor bed together with the indoor fan motor and the motor band.
(6) Disconnect the lead wire of the fan motor from the motor band.
(7) Disengage the hooks of the motor band and remove the motor band. Pull out the indoor fan motor.
(8) Remove the indoor coil thermistor from the heat exchanger.
* Install the indoor coil thermistor in its former position when assembling it.
(9) Remove the screws fixing the left side and upper right side of the heat exchanger.
(10) Lift the heat exchanger, and pull out the line flow fan to the lower-left.
* When attaching the line flow fan, screw the line flow fan so 5/32 inch (4 mm) gap is provided between the right end of the line flow fan and the right wall of the air passage of the box (Figure 1).

Figure 1

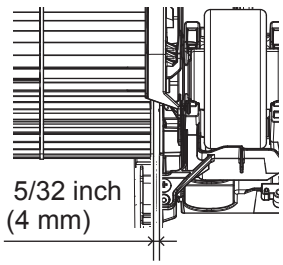

Photo 7

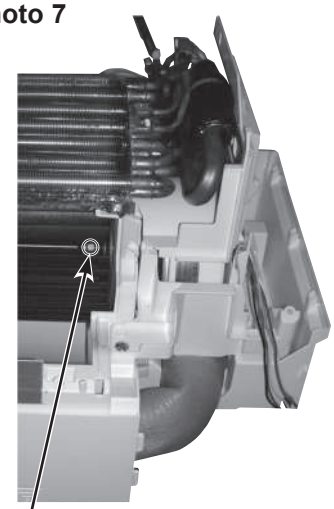

Photo 8

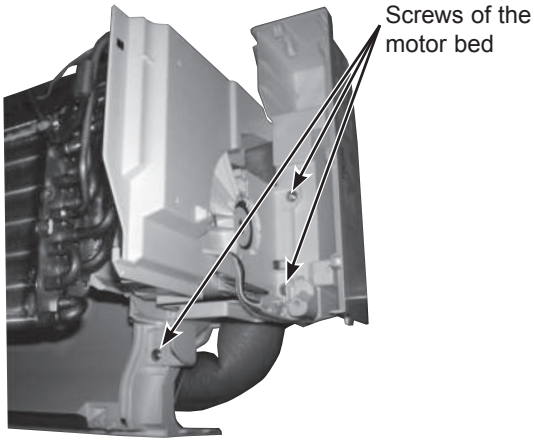

Photo 9

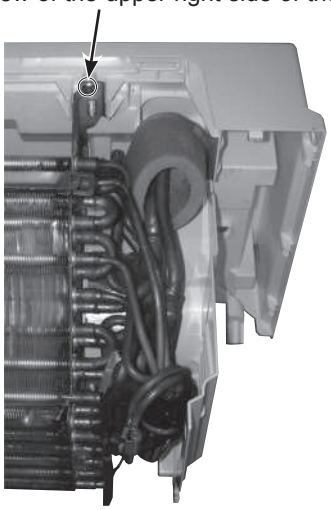

Photo 10

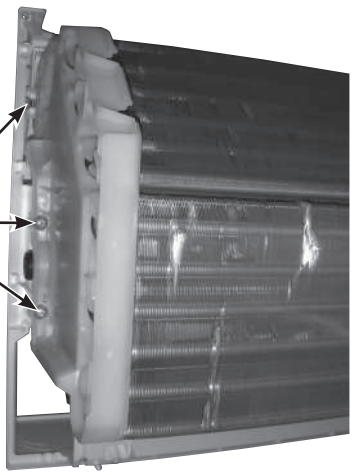

Fixing the indoor coil thermistor

* There are 2 forms of parts for fixing the indoor coil thermistor.

Clip shape

Holder shape

When fixing the indoor coil thermistor to the clip-shape/holder-shape part, the lead wire should point down.

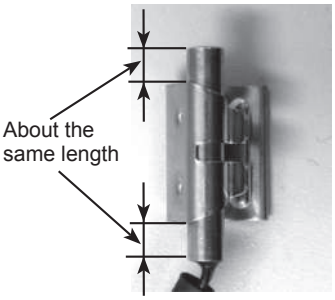

Position and procedure for mounting the clip-shape part

1. Set the indoor coil thermistor in the center of the clip-shape part.

2. Check the (marked) mounting position.

3. Mount the clip-shape part.

NOTE:

- Take care to avoid loss and accidental falling of the clip-shape part inside the unit.
- Mount the clip-shape part on the marked position.
- Do not pull the lead wire when removing the indoor coil thermistor.

MITSUBISHI ELECTRIC CORPORATION

HEAD OFFICE: TOKYO BUILDING, 2-7-3, MARUNOUCHI, CHIYODA-KU, TOKYO 100-8310, JAPAN

© Copyright 2015 MITSUBISHI ELECTRIC CORPORATION
Issued: Sep. 2023. No. OBH746 REVISED EDITION-E
Issued: Feb. 2022. No. OBH746 REVISED EDITION-D
Issued: Nov. 2021. No. OBH746 REVISED EDITION-C
Issued: Mar. 2016. No. OBH746 REVISED EDITION-B
Issued: Feb. 2016. No. OBH746 REVISED EDITION-A
Published: Dec. 2015. No. OBH746
Made in Japan

Specifications are subject to change without notice.