# MSZ-HX12NL2 & MUZ-HX12NL
## 12,000 BTU/H WALL-MOUNTED INDOOR UNIT
## 12,000 BTU/H INVERTER HEAT PUMP OUTDOOR UNIT

| | | | |
|---|---|---|---|
| **Job Name:** | | | |
| **System Reference:** | | **Date:** | |

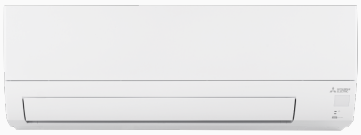

INDOOR Unit ... MSZ-HX12NL2

OUTDOOR Unit ... MUZ-HX12NL

### INDOOR UNIT FEATURES

- Wi-Fi Built-in: Wi-Fi enabled units pair with the Comfort app for complete control over temperature, fan speeds, modes, schedules, and more.
- Swing Mode: An indoor unit with this capability can move air throughout the room like an oscillating fan.
- Smart Dry Mode: Improves humidity control with minimal over-cooling of the space.
- Smart Set: Smart Set conveniently adjusts to the preferred preset temperature by pressing a single button on the remote control.
- Dual Barrier Coating: Dual Barrier Coating reduces the collection of contaminants like dust, fibers, smoke, and oil on the inner surface of the indoor unit.
- Horizontal Vane Control: Horizontal Vane Control allows the indoor unit vanes to be moved left and right to provide even temperatures throughout a space.
- Auto Changeover: The unit will automatically switch between heating and cooling modes to maintain your desired temperature.

### OUTDOOR UNIT FEATURES

- Inverter Driven Compressor: Inverter technology uses only the precise amount of energy needed to keep a space comfortable.
- Blue Fin Coating: Anti-corrosion coating that protects the outdoor heat exchanger against salt, sulfur, and other airborne contaminants that impact the efficiency and performance of the outdoor units.
- Seacoast Protection: An anti-corrosion treatment applied to the aluminum fins of the heat exchanger of the outdoor unit to protect against corrosion caused by salt, sulfur, and other airborne contaminants, especially in coastal and industrial areas.


© 2026 Mitsubishi Electric Trane HVAC US LLC. All rights reserved.

# SPECIFICATIONS: MSZ-HX12NL2 & MUZ-HX12NL

| | | | |
|---|---|---|---|
| Cooling at 95F[1] | Maximum Capacity | Btu/h | 13400 |
| | Rated Capacity | Btu/h | 12000 |
| | Minimum Capacity | Btu/h | 3600 |
| | Maximum Power Input | W | 1430 |
| | Rated Power Input | W | 960 |
| | Moisture Removal | Pints/h | 2.60 |
| | Sensible Heat Factor | | 0.76 |
| | Power Factor [208V / 230V] | % | 94 / 94 |
| Heating at 47F[2] | Maximum Capacity | Btu/h | 15500 |
| | Rated Capacity | Btu/h | 12200 |
| | Minimum Capacity | Btu/h | 4500 |
| | Maximum Power Input | W | 2140 |
| | Rated Power Input | W | 990 |
| | Power Factor [208V / 230V] | % | 95 / 95 |
| Heating at 17F[3] | Maximum Capacity | Btu/h | 9000 |
| | Rated Capacity | Btu/h | 7800 |
| | Maximum Power Input | W | 1670 |
| | Rated Power Input | W | 900 |
| Heating at 5F[5] | Maximum Capacity | Btu/h | 8600 |
| | Maximum Power Input | W | 1400 |
| Heating at -5F[7] | Maximum Capacity | Btu/h | 8300 |
| Efficiency | SEER2 | | 20 |
| | EER2[1] | | 12.50 |
| | HSPF2 [IV] | | 10 |
| | COP at 47°F[2] | | 3.61 |
| | COP at 17°F at Maximum Capacity[3] | | 1.56 |
| | COP at 5°F at Maximum Capacity[5] | | 1.80 |
| | COP at -5°F at Maximum Capacity[7] | | 1.82 |
| | ENERGY STAR® Certified | | Yes |
| Electrical | Voltage, Phase, Frequency | V AC / V AC , ø , Hz | 208 / 230 , 1 , 60 |
| | Guaranteed Voltage Range | V AC | 187 - 253 |
| | Voltage: Indoor - Outdoor, S1-S2 | V AC | 230 / 208 |
| | Voltage: Indoor - Outdoor, S2-S3 | V DC | 24 |
| | Short-circuit Current Rating [SCCR] | kA | 5 |
| | Recommended Fuse/Breaker Size (Outdoor) | A | 20 |
| | Recommended Wire Size [Indoor - Outdoor] | AWG | 14 |
| Indoor Unit | MCA | A | 1 |
| | Breaker Size | A | - |
| | Fan Motor Output | W | 30 |
| | Fan Motor Type | | DC Motor |
| | Airflow Rate at Cooling, Dry | CFM | 168 , 246 , 338 , 475 |
| | Airflow Rate at Cooling, Wet | CFM | 151 , 221 , 304 , 428 |
| | Airflow Rate at Heating, Dry | CFM | 172 , 241 , 348 , 401 |
| | Sound Pressure Level [Cooling] | dB (A) | 22 , 30 , 38 , 47 |
| | Sound Pressure Level [Heating] | dB (A) | 23 , 30 , 38 , 43 |
| | Drain Pipe Size O.D. | inch [ mm ] | 5/8 [ 15.88 ] |
| | Condensate Lift Mechanism, Max Height | inch | 0 |
| | Dual Barrier Coating on Heat Exchanger | | No |
| | Dual Barrier Coating on Fan | | Yes |
| | External Finish Color | | Munsell 0.7PB 9.2/0.4 |
| | Unit Dimensions (W x D x H) | inch x inch x inch [ mm x mm x mm ] | 33 x 9-1/4 x 11-1/32 [ 838 x 235 x 280 ] |
| | Package Dimensions (W x D x H) | inch x inch x inch [ mm x mm x mm ] | 36 x 13-1/4 x 11-1/2 [ 920 x 340 x 300 ] |
| | Unit Weight | lbs [ kg ] | 20 [ 9 ] |
| | Package Weight | lbs [ kg ] | 24 [ 10.50 ] |
| IDU Operating Temp. Range | Cooling Intake Air Temp [Maximum / Minimum] | °FDB , °FWB / °FDB , °FWB | 90 , 73 / 67 , 57 |

**Notes**

[1]Cooling at 95°F (Indoor // Outdoor) °F 80 DB, 67 WB // 95 DB, 75 WB
[2]Heating at 47°F (Indoor // Outdoor) °F 70 DB, 60 WB // 47 DB, 43 WB
[3]Heating at 17°F (Indoor // Outdoor) °F 70 DB, 60 WB // 17 DB, 15 WB
[5]Heating at 5°F (Indoor // Outdoor) °F 70 DB, 60 WB // 5 DB, 4 WB
[7]Heating at -5°F (Indoor // Outdoor) °F 70 DB, 60 WB // -5 DB, -6 WB
[*]Indoor/Outdoor Unit Operating Temperature Range (Cooling Air Temp [Maximum / Minimum]): • Applications should be restricted to comfort cooling only; equipment cooling applications are not recommended for low ambient temperature conditions.
[**]Outdoor Unit Operating Temperature Range (Cooling Thermal Lock-out / Re-start Temperatures; Heating Thermal Lock-out / Re-start Temperatures): • System cuts out in heating mode and automatically restarts at these temperatures.


© 2026 Mitsubishi Electric Trane HVAC US LLC. All rights reserved.

# SPECIFICATIONS: MSZ-HX12NL2 & MUZ-HX12NL

| | | | |
|---|---|---|---|
| IDU Operating Temp. Range | Heating Intake Air Temp [Maximum / Minimum] | °FDB | 80 / 70 |
| Outdoor Unit | MCA | A | 16 |
| | MOCP | A | 20 |
| | Fan Motor Full Load Amperage | A | 0.71 |
| | Fan Motor Output | W | 55 |
| | Airflow Rate Cooling | CFM | 1166 |
| | Airflow Rate Heating | CFM | 1152 |
| | Defrost Method | | Reverse Cycle |
| | Coating on Heat Exchanger (Bluefin, Sea Coast) | | Yes , Yes |
| | Sound Pressure Level, Cooling[1] | dB (A) | 49 |
| | Sound Pressure Level, Heating[2] | dB (A) | 51 |
| | Compressor Type | | Twin Rotary |
| | Compressor Model | | SRB140FQHMC |
| | Compressor Oil [Type // Charge] | // oz | RM68EH // 11.83 |
| | External Finish Color | | Munsell 3Y 7.8/1.1 |
| | Base Pan Heater | | Optional |
| | Unit Dimensions (W x D x H) | inch x inch x inch [ mm x mm x mm ] | 31/-1/2 x 11-1/4 x 21/5/8 [ 800 x 285 x 550 ] |
| | Package Dimensions (W x D x H) | inch x inch x inch [ mm x mm x mm ] | 37-1/16 x 14-31/32 x 24-13/16 [ 940 x 380 x 630 ] |
| | Unit Weight | lbs [ kg ] | 81 [ 36.7 ] |
| | Package Weight | lbs [ kg ] | 88 [ 39.9 ] |
| ODU Operating Temp. Range | Cooling Intake Air Temp [Maximum / Minimum*] | °FDB | 115 / 14 |
| | Cooling Thermal Lock-out / Re-start Temperatures** | °FDB | -1 / 3 |
| | Heating Intake Air Temp [Maximum / Minimum] | °FDB , °FWB / °FDB , °FWB | 75 , 65 / -5 , -6 |
| | Heating Thermal Lock-out / Re-start Temperatures** | °FDB | -14 / -4 |
| Refrigerant | Type | | R454B |
| | Pre-Charged Refrigerant Amount | lbs , oz | 2 , 2 |
| | Maximum Pre-Charged Piping Length | ft [ m ] | 25 [ 7.50 ] |
| | Additional Refrigerant Charge Per Additional Piping Length | oz/ft | 0.22 |
| Piping | Liquid Pipe Size O.D. [Flared] | inch [ mm ] | 1/4 [ 6.35 ] |
| | Gas Pipe Size O.D. [Flared] | inch [ mm ] | 3/8 [ 9.52 ] |
| | Maximum Piping Length | ft [ m ] | 65 [ 20 ] |
| | Maximum Height Difference | ft [ m ] | 40 [ 12 ] |
| | Maximum Number of Bends | | 10 |

**Notes**

[1]Cooling at 95°F (Indoor // Outdoor) °F 80 DB, 67 WB // 95 DB, 75 WB
[2]Heating at 47°F (Indoor // Outdoor) °F 70 DB, 60 WB // 47 DB, 43 WB
[3]Heating at 17°F (Indoor // Outdoor) °F 70 DB, 60 WB // 17 DB, 15 WB
[5]Heating at 5°F (Indoor // Outdoor) °F 70 DB, 60 WB // 5 DB, 4 WB
[7]Heating at -5°F (Indoor // Outdoor) °F 70 DB, 60 WB // -5 DB, -6 WB
*Indoor/Outdoor Unit Operating Temperature Range (Cooling Air Temp [Maximum / Minimum]): • Applications should be restricted to comfort cooling only; equipment cooling applications are not recommended for low ambient temperature conditions.
**Outdoor Unit Operating Temperature Range (Cooling Thermal Lock-out / Re-start Temperatures; Heating Thermal Lock-out / Re-start Temperatures): • System cuts out in heating mode and automatically restarts at these temperatures.


© 2026 Mitsubishi Electric Trane HVAC US LLC. All rights reserved.

# OUTDOOR UNIT ACCESSORIES: MUZ-HX12NL

| | | |
|---|---|---|
| Air Outlet Guide | Air Outlet Guide | MAC-881SG-E |
| Control/Service Tool | M- & P-Series Maintenance Tool Cable Set | M21EC0397 |
| | Maintenance Tool Interface | PAC-USCMS-MN-1 |
| Drain Socket | Drain Socket | MAC-871DS |
| Hail Guards | Hail Guard | HG-B4 |
| Mini-Split Wire | 14 Gauge 4 wire Armored MiniSplit Cable50 ft roll | SW144-50 |
| | 14 Gauge 4 wire MiniSplit Cable50 ft roll | S144-50 |
| | 14 Gauge 4 wire Armored MiniSplit Cable250 ft roll | SW144-250 |
| | 14 Gauge 4 wire MiniSplit Cable250 ft roll | S144-250 |
| Mounting Pad | Condensing Unit Mounting Pad 16 x 36 x 3 | ULTRILITE1 |
| Optional Defrost Heater | Base Heater | MAC-650BH-U |
| Snow/Rain Diverter | SnowRain Diverter | SRD-1 |
| Stand | 18 Single Fan Stand | QSMS1801M |
| | Condenser Wall Bracket - Stainless Steel Finish | QSWBSS |
| | Condenser Wall Bracket | QSWB2000M-1 |
| | 24 Single Fan Stand | QSMS2401M |
| | Outdoor Unit Stand 12 High | QSMS1201M |
| | Outdoor Unit 3-14 inch Mounting Base Pair - Plastic | DSD-400P |
| **Notes** | | |


© 2026 Mitsubishi Electric Trane HVAC US LLC. All rights reserved.

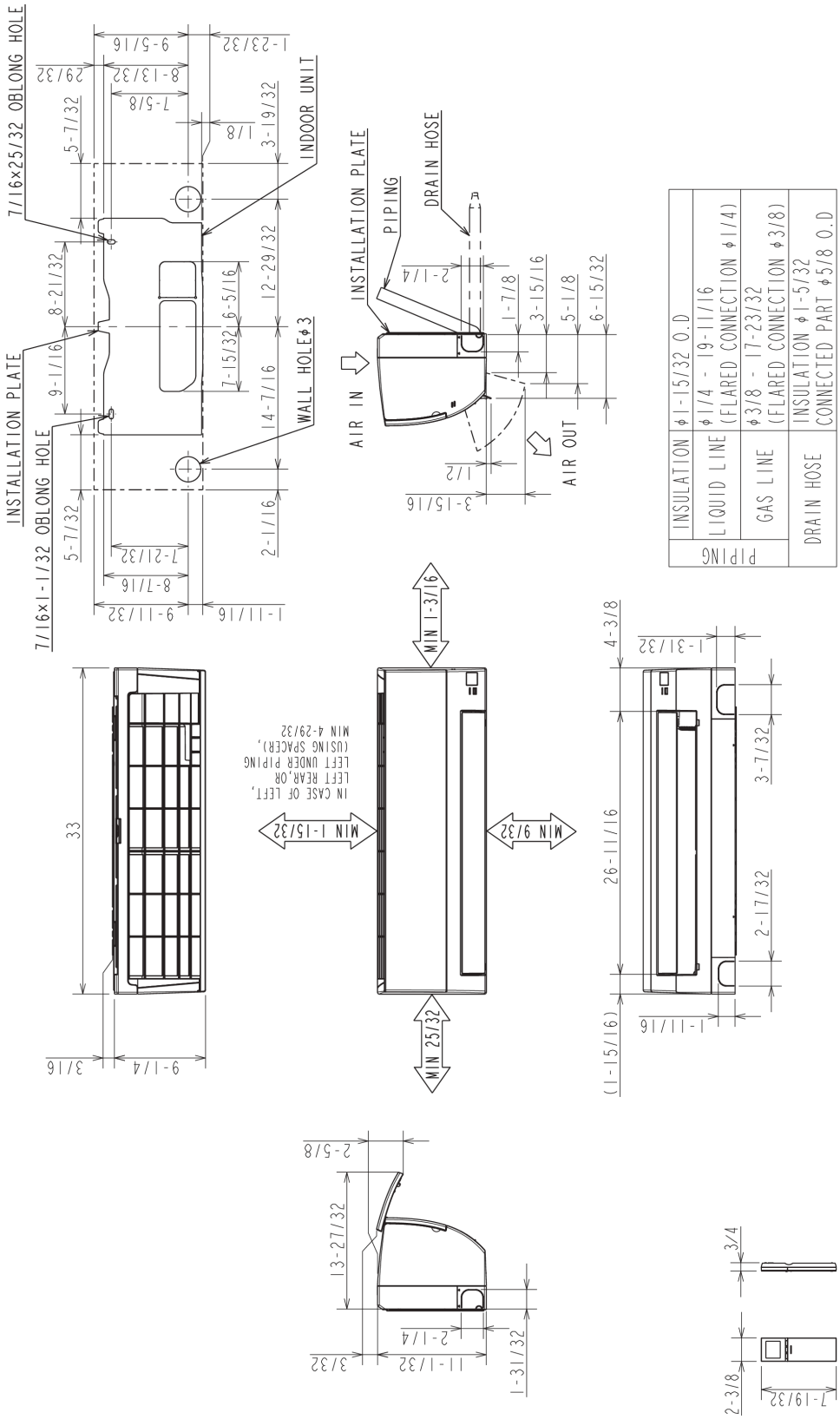


**MSZ-HX09NL2-U1**
**MSZ-HX12NL2-U1**


© 2026 Mitsubishi Electric Trane HVAC US LLC. All rights reserved.

## *MUZ-HX09NL-U1*
## *MUZ-HX12NL-U1*

### *REQUIRED SPACE*

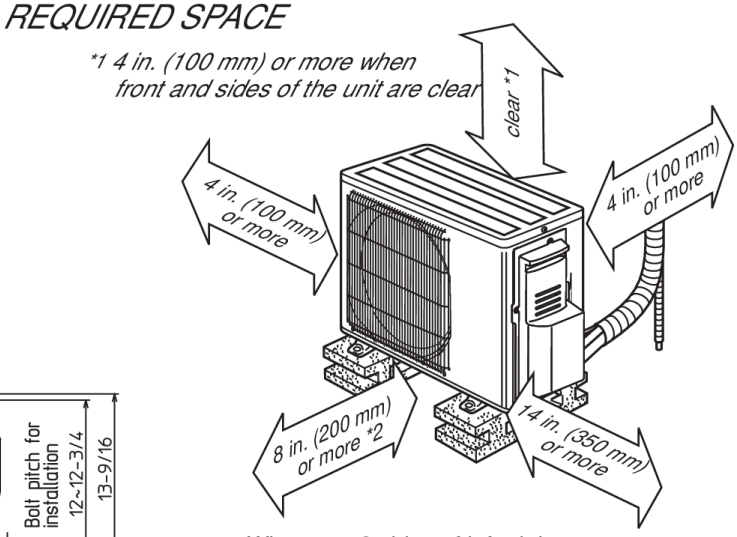


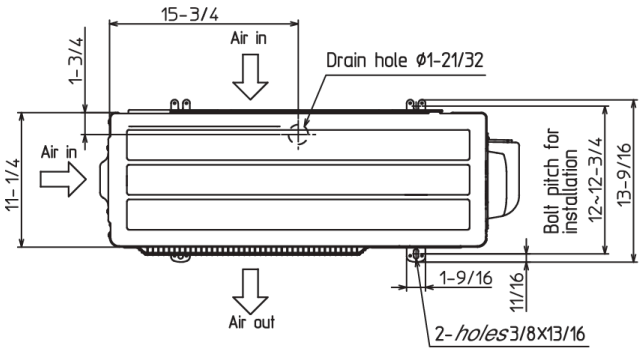


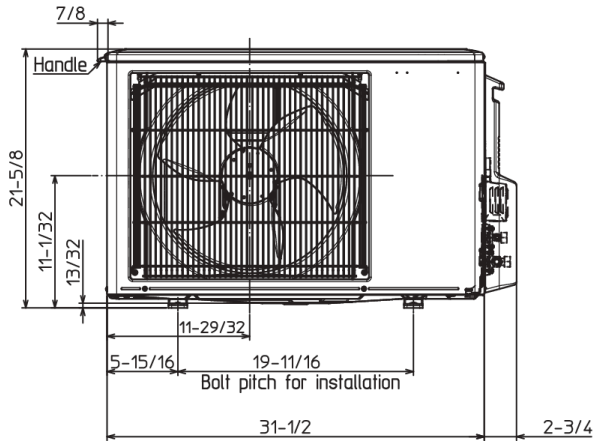


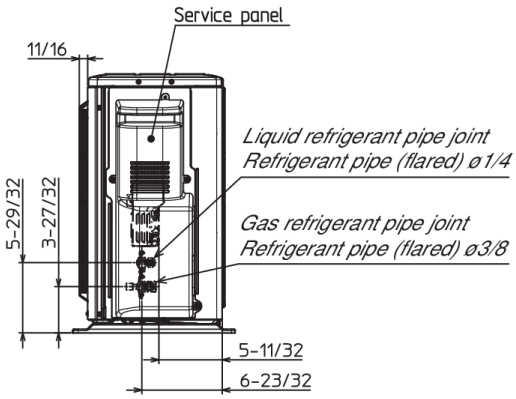


| | | |
|---|---|---|
| REFRIGERANT PIPE JOINT | LIQUID REFRIGERANT PIPE | FLARED 1/4 |
| | GAS REFRIGERANT PIPE | FLARED 3/8 |

1340 Satellite Boulevard Suwanee, GA 30024
Toll Free: 800-433-4822 · mitsubishicomfort.com

METUS_2026-08_PROPIN

Specifications are subject to change without notice.
© 2026 Mitsubishi Electric Trane HVAC US LLC. All rights reserved.