MITSUBISHI ELECTRIC

SPLIT-TYPE AIR CONDITIONERS

Revision H:
- A warning when opening or closing the valve has been added.

OBH549 REVISED EDITION-G is void.

OUTDOOR UNIT

HFC utilized R410A

No. OBH549
REVISED EDITION-H

SERVICE MANUAL

Models

MUZ-GE09NA
MUZ-GE09NA2
MUZ-GE12NA
MUZ-GE12NA2
MUZ-GE15NA, -1
MUZ-GE15NA2
MUZ-GE18NA, -1
MUZ-GE24NA
MUY-GE09NA
MUY-GE09NA2
MUY-GE12NA
MUY-GE12NA2
MUY-GE15NA, -1
MUY-GE15NA2

MUZ-GE09NAH
MUZ-GE09NAH2
MUZ-GE12NAH
MUZ-GE12NAH2
MUZ-GE15NAH
MUZ-GE15NAH2
MUZ-GE18NAH

MUY-GE18NA, -1
MUY-GE24NA

Indoor unit service manual
MSZ-GE•NA MSY-GE•NA Series (OBH548)

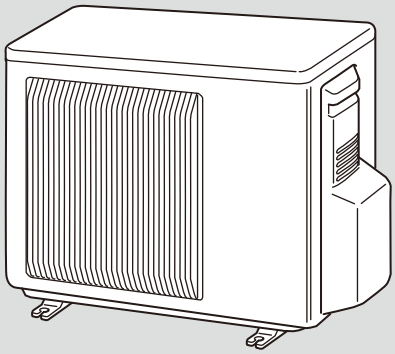

MUZ-GE09NA/NA2
MUZ-GE12NA/NA2
MUZ-GE15NA, -1/NA2
MUY-GE09NA/NA2
MUY-GE12NA/NA2
MUY-GE15NA, -1/NA2

MUZ-GE09NAH/NAH2
MUZ-GE12NAH/NAH2
MUZ-GE15NAH/NAH2

CONTENTS

1. TECHNICAL CHANGES ····· 3
2. PART NAMES AND FUNCTIONS ····· 4
3. SPECIFICATION ····· 6
4. OUTLINES AND DIMENSIONS ····· 10
5. WIRING DIAGRAM ····· 13
6. REFRIGERANT SYSTEM DIAGRAM ····· 25
7. DATA ····· 28
8. ACTUATOR CONTROL ····· 42
9. SERVICE FUNCTIONS ····· 43
10. TROUBLESHOOTING ····· 44
11. DISASSEMBLY INSTRUCTIONS ····· 64

PARTS CATALOG (OBB549)

Mr.SLIM™

Use the specified refrigerant only

Never use any refrigerant other than that specified.

Doing so may cause a burst, an explosion, or fire when the unit is being used, serviced, or disposed of.
Correct refrigerant is specified in the manuals and on the spec labels provided with our products.
We will not be held responsible for mechanical failure, system malfunction, unit breakdown or accidents caused by failure to follow the instructions.

<Preparation before the repair service>

- Prepare the proper tools.
- Prepare the proper protectors.
- Provide adequate ventilation.
- After stopping the operation of the air conditioner, turn off the power-supply breaker and pull the power plug.
- Discharge the capacitor before the work involving the electric parts.

<Precautions during the repair service>

- Do not perform the work involving the electric parts with wet hands.
- Do not pour water into the electric parts.
- Do not touch the refrigerant.
- Do not touch the hot or cold areas in the refrigeration cycle.
- When the repair or the inspection of the circuit needs to be done without turning off the power, exercise great caution not to touch the live parts.

⚠ WARNING

- **When the refrigeration circuit has a leak, do not execute pump down with the compressor.**
- **When pumping down the refrigerant, stop the compressor before disconnecting the refrigerant pipes. The compressor may burst if air etc. get into it.**
- **When opening or closing the valve below freezing temperatures, refrigerant may spurt out from the gap between the valve stem and the valve body, resulting in injuries.**

Revision A:
• MUZ-GE24NA and MUY-GE24NA have been added.

Revision B:
• Descriptions regarding the outdoor fan motor has been corrected.

Revision C:
• MUZ-GE15NA-1, MUZ-GE18NA-1, MUY-GE15NA-1, and MUY-GE18NA-1 have been added.

Revision D:
• Specification has been corrected. [Capacity ➔ Capacity Rated (Maximum), Power consumption ➔ Power consumption Rated (Maximum)]

Revision E:
• MUZ-GE09NAH, MUZ-GE12NAH, MUZ-GE15NAH and MUZ-GE18NAH have been added.

Revision F:
• MUZ-GE09/12/15NA2, MUZ-GE09/12/15NAH2 and MUY-GE09/12/15NA2 have been added.

Revision G:
• The descriptions of the expansion valve coil have been corrected. (10-4.)
• Some descriptions have been modified.

Revision H:
• A warning when opening or closing the valve has been added.

1 TECHNICAL CHANGES

MUZ-GE09NA MUY-GE09NA
MUZ-GE12NA MUY-GE12NA
MUZ-GE15NA MUY-GE15NA
MUZ-GE18NA MUY-GE18NA
MUZ-GE24NA MUY-GE24NA

1. New model

MUZ-GE15NA → MUZ-GE15NA -1
MUZ-GE18NA → MUZ-GE18NA -1

1. Compressor has been changed.
2. Inverter P.C. board has been changed.

MUY-GE15NA → MUY-GE15NA -1
MUY-GE18NA → MUY-GE18NA -1

1. Compressor has been changed.
2. Inverter P.C. board has been changed.

MUZ-GE09NA → MUZ-GE09NAH

1. Defrost heater has been added.
2. Reactor has been changed.
3. Inverter P.C. board has been changed.

MUZ-GE12NA → MUZ-GE12NAH
MUZ-GE15NA -1 → MUZ-GE15NAH
MUZ-GE18NA -1 → MUZ-GE18NAH

1. Defrost heater has been added.
2. Inverter P.C. board has been changed.

MUZ-GE09NA → MUZ-GE09NA2
MUZ-GE12NA → MUZ-GE12NA2
MUZ-GE15NA -1 → MUZ-GE15NA2
MUZ-GE09NAH → MUZ-GE09NAH2
MUZ-GE12NAH → MUZ-GE12NAH2
MUZ-GE15NAH → MUZ-GE15NAH2
MUY-GE09NA → MUY-GE09NA2
MUY-GE12NA → MUY-GE12NA2
MUY-GE15NA -1 → MUY-GE15NA2

1. SEER and HSPF have been added.

2 PART NAMES AND FUNCTIONS

MUZ-GE09NA
MUZ-GE09NA2
MUZ-GE09NAH
MUZ-GE09NAH2
MUY-GE09NA
MUY-GE09NA2

MUZ-GE12NA
MUZ-GE12NA2
MUZ-GE12NAH
MUZ-GE12NAH2
MUY-GE12NA
MUY-GE12NA2

MUZ-GE15NA
MUZ-GE15NA2
MUZ-GE15NAH
MUZ-GE15NAH2
MUY-GE15NA
MUY-GE15NA2

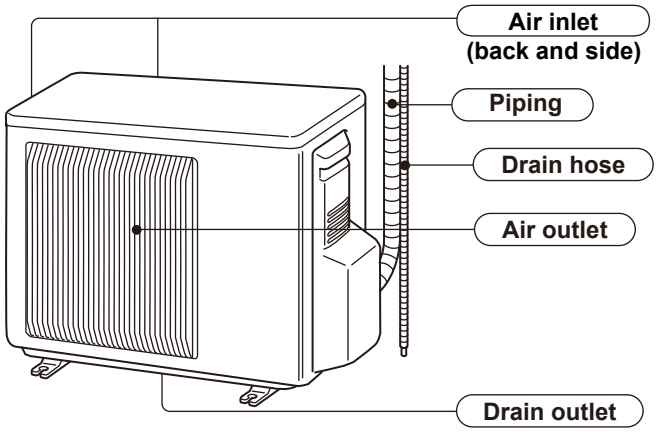

MUZ-GE18NA
MUZ-GE18NAH
MUY-GE18NA

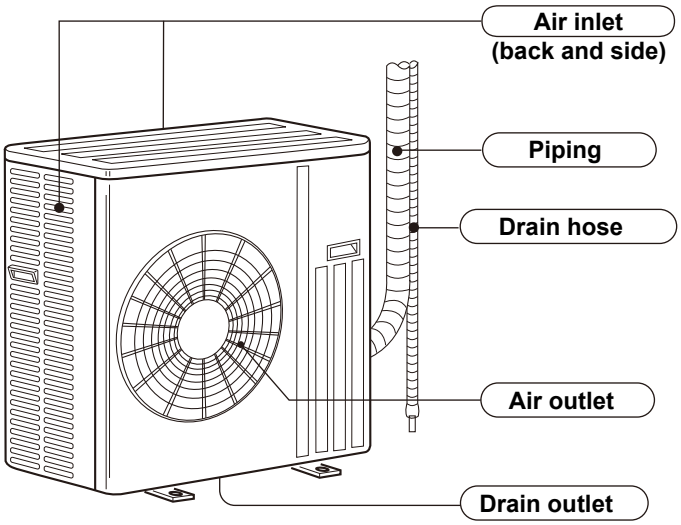

MUZ-GE24NA
MUY-GE24NA

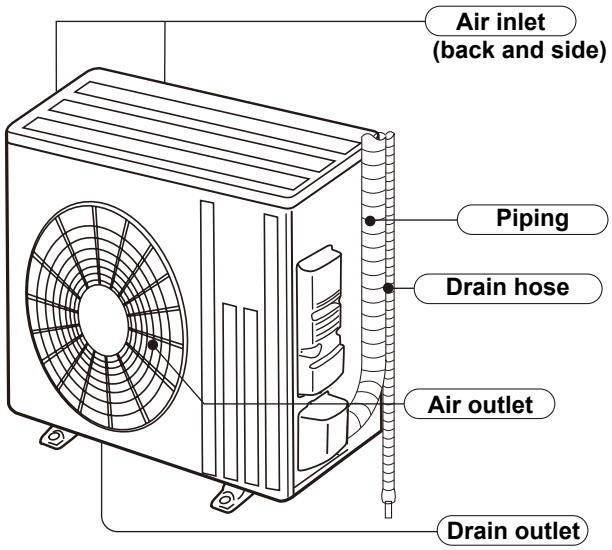

3 SPECIFICATION

Outdoor unit model			MUZ-GE09NA MUZ-GE09NA2 MUZ-GE09NAH MUZ-GE09NAH2	MUY-GE09NA MUY-GE09NA2	MUZ-GE12NA MUZ-GE12NA2 MUZ-GE12NAH MUZ-GE12NAH2	MUY-GE12NA MUY-GE12NA2
Capacity Rated (Minimum~Maximum)	Cooling *1	Btu/h	9,000 (3,800 ~ 12,200)	9,000 (3,800 ~ 12,200)	12,000 (3,800 ~ 13,600)	12,000 (3,800 ~ 13,600)
	Heating 47 *1	Btu/h	10,900 (4,500 ~ 14,100)	—	14,400 (5,500 ~ 18,100)	—
Capacity Rated (Maximum)	Heating 17 *2	Btu/h	6,600 (8,700)	—	8,800 (11,200)	—
Power consumption Rated (Minimum~Maximum)	Cooling *1	W	660 (205~1,200)	660 (205~1,200)	960 (205~1,300)	960 (205~1,300)
	Heating 47 *1	W	760 (255~1,200)	—	1,170 (340~1,660)	—
Power consumption Rated (Maximum)	Heating 17 *2	W	700 (950)	—	900 (1,200)	—
EER *1 [SEER] *3	Cooling		**09NA/H**: 13.6 [21.0]	**09NA**: 13.6 [21.0]	**12NA/H**: 12.5 [20.5]	**12NA/H**: 12.5 [20.5]
			09NA2/H2: 13.6 [23.2]	**09NA2**: 13.6 [23.2]	**12NA2/H2**: 12.5 [22.7]	**12NA2/H2**: 12.5 [22.7]
HSPF IV *4	Heating		**09NA/H**: 10.0	—	**12NA/H**: 10.0	—
			09NA2: 11.0		**12NA2**: 11.4	
			09NAH2: 10.1		**12NAH2**: 10.8	
COP	Heating *1		4.20	—	3.61	—
Power supply	V , phase , Hz		208/230 , 1 , 60			
Max. fuse size (time delay)		A	15			
Min. circuit ampacity		A	12			
Fan motor		F.L.A	0.50			
Compressor	Model		KNB073FQDHC		KNB092FQAHC	
		R.L.A	6.6	4.9	6.6	4.9
		L.R.A	8.2	6.1	8.2	6.1
	Refrigeration oil (Model)	L	0.32 (NEO22)			
Refrigerant control			Linear expansion valve			
Sound level *1	Cooling	dB(A)	46		49	
	Heating	dB(A)	50	—	51	—
Defrost method			Reverse cycle			
Dimensions	W	in.	31-1/2			
	D	in.	11-1/4			
	H	in.	21-5/8			
Weight		lb.	66		77	
External finish			Munsell 3Y 7.8/1.1			
Remote controller			Wireless type			
Control voltage (by built-in transformer)		V DC	12 - 24			
Refrigerant piping			Not supplied			
Refrigerant pipe size (Min. wall thickness)	Liquid	in.	1/4 (0.0315)			
	Gas	in.	3/8 (0.0315)			
Connection method	Indoor		Flared			
	Outdoor		Flared			
Between the indoor & outdoor units	Height difference	ft.	40			
	Piping length	ft.	65			
Refrigerant charge (R410A)			1 lb. 12 oz.		2 lb. 9 oz.	

NOTE: Test conditions are based on AHRI 210/240.

*1: Rating conditions (Cooling) — Indoor: 80˚FDB, 67˚FWB, Outdoor: 95˚FDB, (75˚FWB)
(Heating) — Indoor: 70˚FDB, 60˚FWB, Outdoor: 47˚FDB, 43˚FWB

*2: Rating conditions (Heating) — Indoor: 70˚FDB, 60˚FWB, Outdoor: 17˚FDB, 15˚FWB

Outdoor unit model			MUZ-GE15NA MUZ-GE15NA- 1 MUZ-GE15NA2 MUZ-GE15NAH MUZ-GE15NAH2	MUY-GE15NA MUY-GE15NA- 1 MUY-GE15NA2	MUZ-GE18NA MUZ-GE18NA- 1 MUZ-GE18NAH	MUY-GE18NA MUY-GE18NA- 1
Capacity Rated (Minimum~Maximum)	Cooling *1	Btu/h	14,000 (3,100 ~ 18,200)	14,000 (3,100 ~ 18,200)	17,200 (3,700 ~ 18,700)	17,200 (3,700 ~ 18,700)
	Heating 47 *1	Btu/h	18,000 (4,800 ~ 20,900)	—	21,600 (3,500 ~ 25,200)	—
Capacity Rated (Maximum)	Heating 17 *2	Btu/h	11,300 (15,900)	—	13,400 (17,200)	—
Power consumption Rated (Minimum~Maximum)	Cooling *1	W	1,080 (160 ~ 2,000)	1,080 (160 ~ 2,000)	1,640 (240 ~ 2,070)	1,640 (240 ~ 2,070)
	Heating 47 *1	W	1,600 (270 ~ 2,010)	—	1,900 (230 ~ 2,680)	—
Power consumption Rated (Maximum)	Heating 17 *2	W	1,150 (1,950)	—	1,450 (2,080)	—
EER *1 [SEER] *3	Cooling		**15NA/H**: 13.0 [21.0] **15NA2/H2**: 13.6 [21.6]	**15NA/H**: 13.0 [21.0] **15NA2/H2**: 13.6 [21.6]	10.5 [19.2]	10.5 [19.2]
HSPF IV *4	Heating		**15NA/H**: 10.0 **15NA2**: 11.2 **15NA2/H2**: 10.8	—	10.0	—
COP	Heating *1		3.30	—	3.33	—
Power supply	V , phase , Hz		208/230 , 1 , 60			
Max. fuse size (time delay)		A	15			
Min. circuit ampacity		A	12		14	
Fan motor		F.L.A	0.50		0.93	
Compressor	Model		**MUZ/MUY-GE·NA**	SNB130FQBH		
			MUZ/MUY-GE·NA2 **MUZ/MUY-GE·NA- 1** **MUZ-GE·NAH, NAH2**	SNB130FQBHT		
		R.L.A	7.4	6.8	10.0	
		L.R.A	9.3	8.5	12.5	
	Refrigeration oil (Model)	L	0.45 (NEO22)			
Refrigerant control			Linear expansion valve			
Sound level *1	Cooling	dB(A)	49		54	
	Heating	dB(A)	51	—	56	—
Defrost method			Reverse cycle			
Dimensions	W	in.	31-1/2		33-1/16	
	D	in.	11-1/4		13	
	H	in.	21-5/8		33-7/16	
Weight		lb.	80		119	
External finish			Munsell 3Y 7.8/1.1			
Remote controller			Wireless type			
Control voltage (by built-in transformer)		V DC	12 - 24			
Refrigerant piping			Not supplied			
Refrigerant pipe size (Min. wall thickness)	Liquid	in.	1/4 (0.0315)			
	Gas	in.	1/2 (0.0315)			
Connection method	Indoor		Flared			
	Outdoor		Flared			
Between the indoor & outdoor units	Height difference	ft.	40		50	
	Piping length	ft.	65		100	
Refrigerant charge (R410A)			2 lb. 9 oz.		3 lb. 7 oz.	

NOTE: Test conditions are based on AHRI 210/240.

*1: Rating conditions (Cooling) — Indoor: 80˚FDB, 67˚FWB, Outdoor: 95˚FDB, (75˚FWB)
(Heating) — Indoor: 70˚FDB, 60˚FWB, Outdoor: 47˚FDB, 43˚FWB

*2: Rating conditions (Heating) — Indoor: 70˚FDB, 60˚FWB, Outdoor: 17˚FDB, 15˚FWB

Outdoor unit model			MUZ-GE24NA	MUY-GE24NA
Capacity Rated (Minimum~Maximum)	Cooling *1	Btu/h	22,500 (8,200 ~ 31,400)	22,500 (8,200 ~ 31,400)
	Heating 47 *1	Btu/h	27,600 (7,500 ~ 36,900)	—
Capacity Rated (Maximum)	Heating 17 *2	Btu/h	16,000 (24,600)	—
Power consumption Rated (Minimum~Maximum)	Cooling *1	W	1,800 (570 ~ 3,580)	1,800 (570 ~ 3,580)
	Heating 47 *1	W	2,340 (520 ~ 3,650)	—
Power consumption Rated (Maximum)	Heating 17 *2	W	1,770 (3,290)	—
EER *1 [SEER] *3	Cooling		12.5 [19.0]	
HSPF IV *4	Heating		10.0	—
COP	Heating *1		3.46	—
Power supply	V , phase , Hz		208/230 , 1 , 60	
Max. fuse size (time delay)		A	20	
Min. circuit ampacity		A	17.1	
Fan motor		F.L.A	0.93	
Compressor	Model		SNB172FQKMT	
	R.L.A		12.9	
	L.R.A		16.1	
	Refrigeration oil (Model)	L	0.40 (FV50S)	
Refrigerant control			Linear expansion valve	
Sound level *1	Cooling	dB(A)	55	
	Heating	dB(A)	55	—
Defrost method			Reverse cycle	
Dimensions	W	in.	33-1/16	
	D	in.	13	
	H	in.	34-5/8	
Weight		lb.	119	
External finish			Munsell 3Y 7.8/1.1	
Remote controller			Wireless type	
Control voltage (by built-in transformer)		V DC	12-24	
Refrigerant piping			Not supplied	
Refrigerant pipe size (Min. wall thickness)	Liquid	in.	3/8 (0.0315)	
	Gas	in.	5/8 (0.0315)	
Connection method	Indoor		Flared	
	Outdoor		Flared	
Between the indoor & outdoor units	Height difference	ft.	50	
	Piping length	ft.	100	
Refrigerant charge (R410A)			4 lb. 3 oz.	

NOTE: Test conditions are based on AHRI 210/240.

*1: Rating conditions (Cooling) — Indoor: 80˚FDB, 67˚FWB, Outdoor: 95˚FDB, (75˚FWB)
(Heating) — Indoor: 70˚FDB, 60˚FWB, Outdoor: 47˚FDB, 43˚FWB

*2: Rating conditions (Heating) — Indoor: 70˚FDB, 60˚FWB, Outdoor: 17˚FDB, 15˚FWB

Test condition

*3,*4

ARI	Mode	Test	Indoor air condition (°F)		Outdoor air condition (°F)	
			Dry bulb	Wet bulb	Dry bulb	Wet bulb
	SEER (Cooling)	"A-2" Cooling Steady State at rated compressor Speed	80	67	95	(75)
		"B-2" Cooling Steady State at rated compressor Speed	80	67	82	(65)
		"B-1" Cooling Steady State at minimum compressor Speed	80	67	82	(65)
		"F-1" Cooling Steady State at minimum compressor Speed	80	67	67	(53.5)
		"E-V" Cooling Steady State at Intermediate compressor Speed *5	80	67	87	(69)
	HSPF (Heating) **(MUZ)**	"H1-2" Heating Steady State at rated compressor Speed	70	60	47	43
		"H3-2" Heating at rated compressor Speed	70	60	17	15
		"H0-1" Heating Steady State at minimum compressor Speed	70	60	62	56.5
		"H1-1" Heating Steady State at minimum compressor Speed	70	60	47	43
		"H2-V" Heating at Intermediate compressor Speed *5	70	60	35	33

*5: At Intermediate compressor Speed
= ("Cooling rated compressor speed" - "minimum compressor speed") / 3 + "minimum compressor speed".

3-1. OPERATING RANGE

(1) POWER SUPPLY

	Rated voltage	Guaranteed voltage (V)
Outdoor unit	208/230 V 1 phase 60 Hz	Min. 187 — 208 — 230 — Max. 253

(2) OPERATION

Mode	Condition	Intake air temperature (°F)			
		Indoor		Outdoor	
		DB	WB	DB	WB
Cooling	Standard temperature	80	67	95	—
	Maximum temperature	90	73	115	—
	Minimum temperature	67	57	14	—
	Maximum humidity	78 %		—	
Heating **(MUZ)**	Standard temperature	70	60	47	43
	Maximum temperature	80	67	75	65
	Minimum temperature	70	60	-4	-5

4 OUTLINES AND DIMENSIONS

Unit: inch

MUZ-GE09NA	**MUZ-GE12NA**	**MUZ-GE15NA**
MUZ-GE09NA2	**MUZ-GE12NA2**	**MUZ-GE15NA2**
MUZ-GE09NAH	**MUZ-GE12NAH**	**MUZ-GE15NAH**
MUZ-GE09NAH2	**MUZ-GE12NAH2**	**MUZ-GE15NAH2**
MUY-GE09NA	**MUY-GE12NA**	**MUY-GE15NA**
MUY-GE09NA2	**MUY-GE12NA2**	**MUY-GE15NA2**

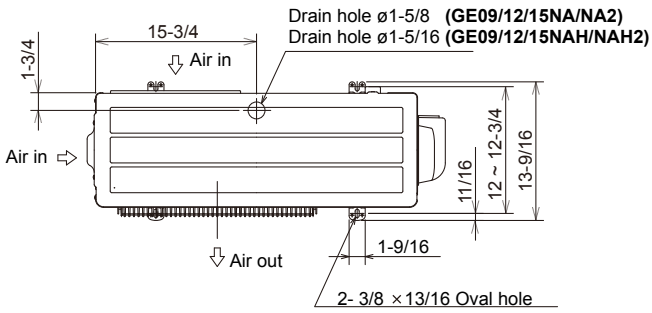

REQUIRED SPACE

*1 **4 in.** or more when front and sides of the unit are clear

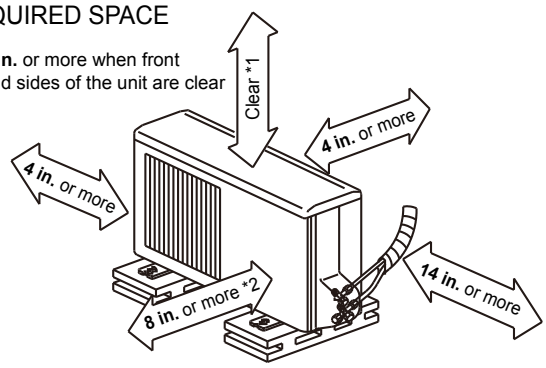

*2 When any 2 sides of left, right and rear of the unit are clear

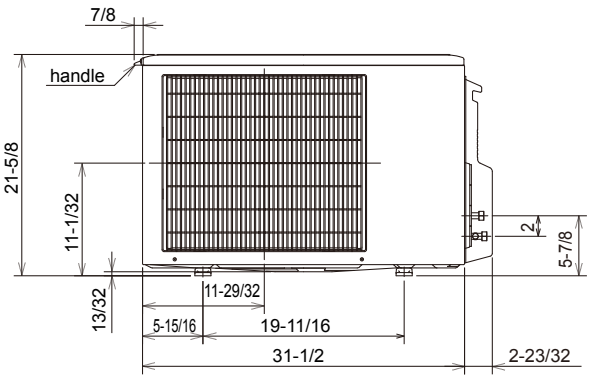

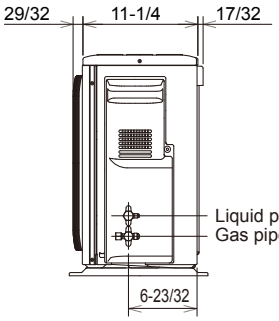

Liquid pipe :1/4 (flared)
Gas pipe :3/8 (flared) **(GE09/12)**
1/2 (flared) **(GE15)**

MUZ-GE18NA
MUZ-GE18NAH
MUY-GE18NA

Unit: inch

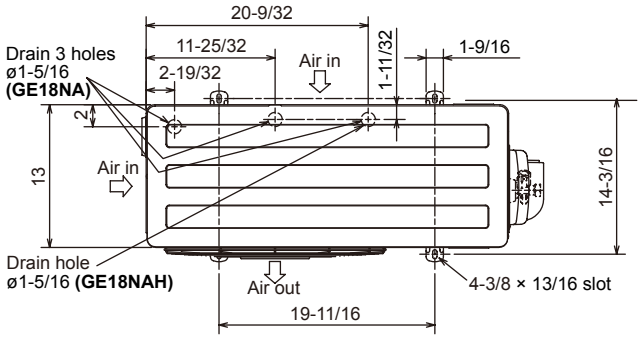

REQUIRED SPACE

*1 **20 in.** more when front and sides of the unit are clear

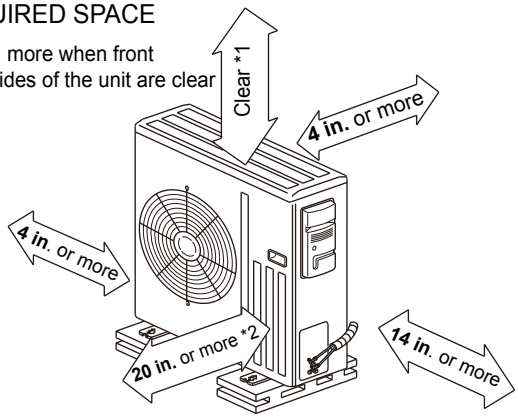

*2 When any 2 sides of left, right and rear of the unit are clear

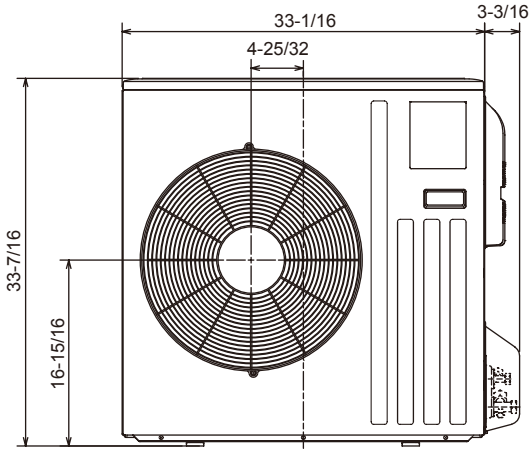

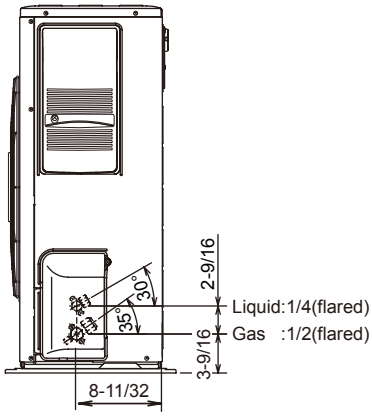

MUZ-GE24NA
MUY-GE24NA

Unit: inch

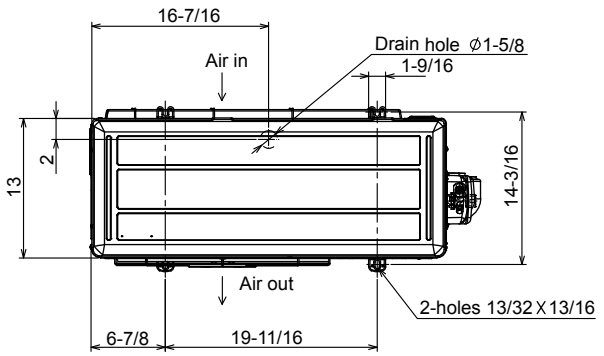

REQUIRED SPACE

*1 **20 in.** or more when front and sides of the unit are clear

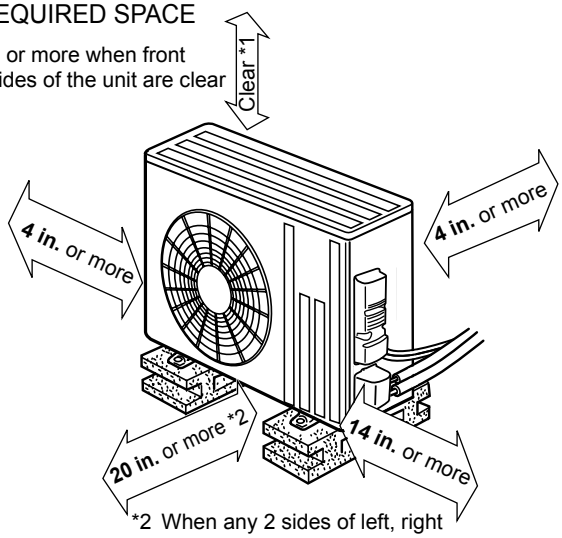

*2 When any 2 sides of left, right and rear of the unit are clear

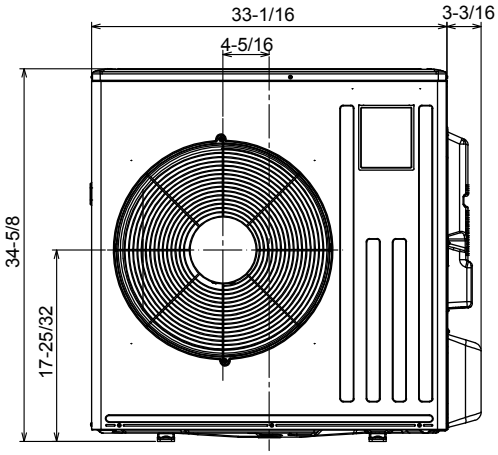

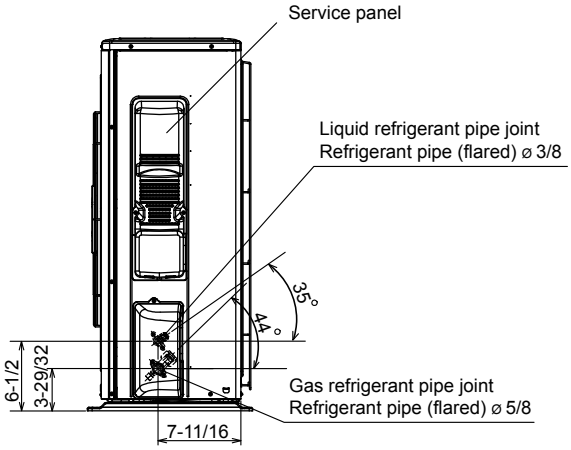

5 WIRING DIAGRAM

MUZ-GE09NA MUZ-GE12NA

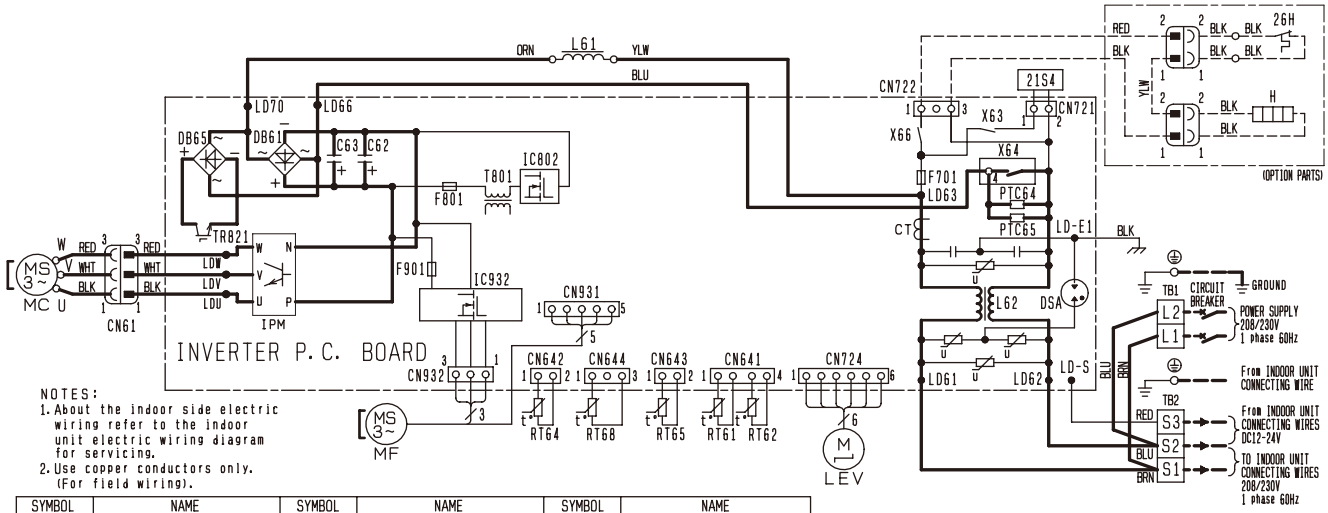

SYMBOL	NAME	SYMBOL	NAME	SYMBOL	NAME
CT	CURRENT TRANSFORMER	L62	CMC COIL	RT68	OUTDOOR HEAT EXCHANGER TEMP. THERMISTOR.
C62, C63	SMOOTHING CAPACITOR	LEV	EXPANSION VALVE COIL		
DB61, DB65	DIODE MODULE	MC	COMPRESSOR	TB1, TB2	TERMINAL BLOCK
DSA	SURGE ABSORBER	MF	FAN MOTOR	TR821	SWITCHING POWER TRANSISTOR
F701, F801, F901	FUSE (T3.15AL250V)	PTC64, PTC65	CIRCUIT PROTECTION	T801	TRANSFORMER
H	DEFROST HEATER(OPTION PARTS)	RT61	DEFROST THERMISTOR	X63, X64, X66	RELAY
IC802	INTELLIGENT POWER DEVICE	RT62	DISCHARGE TEMP. THERMISTOR	21S4	REVERSING VALVE COIL
IPM, IC932	INTELLIGENT POWER MODULE	RT64	FIN TEMP. THERMISTOR	26H	HEATER PROTECTOR(OPTION PARTS)
L61	REACTOR	RT65	AMBIENT TEMP. THERMISTOR		

MUZ-GE09NA2 MUZ-GE12NA2

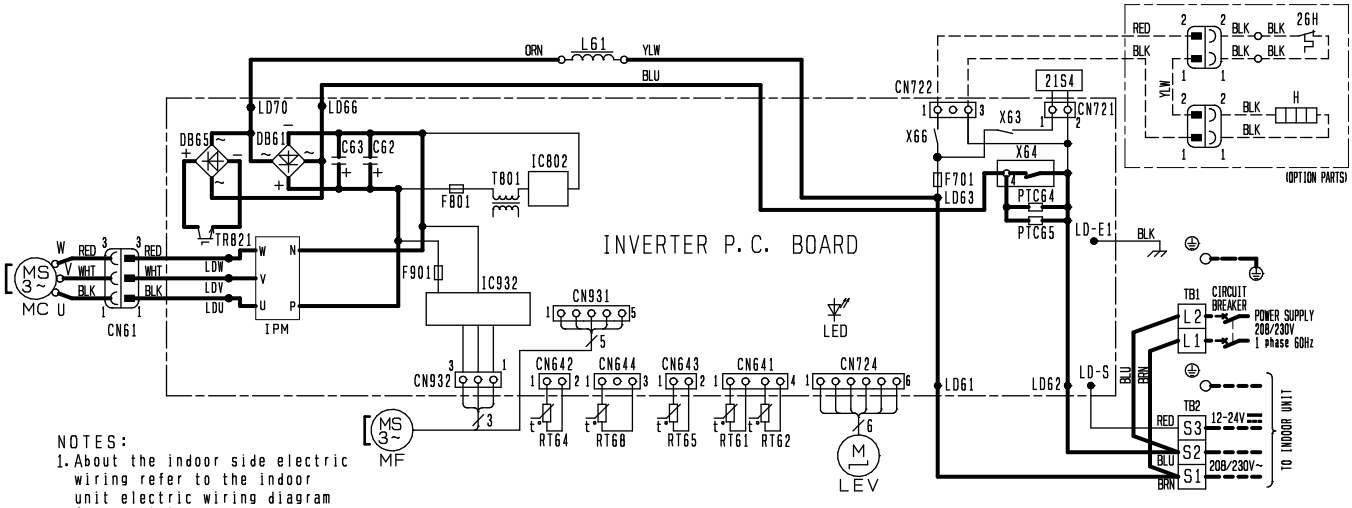

SYMBOL	NAME	SYMBOL	NAME	SYMBOL	NAME
C62, C63	SMOOTHING CAPACITOR	LEV	EXPANSION VALVE COIL	RT68	OUTDOOR HEAT EXCHANGER TEMP. THERMISTOR.
DB61, DB65	DIODE MODULE	MC	COMPRESSOR		
F701, F801, F901	FUSE (T3.15AL250V)	MF	FAN MOTOR	TB1, TB2	TERMINAL BLOCK
H	DEFROST HEATER(OPTION PARTS)	PTC64, PTC65	CIRCUIT PROTECTION	TR821	SWITCHING POWER TRANSISTOR
IC802	POWER DEVICE	RT61	DEFROST THERMISTOR	T801	TRANSFORMER
IPM, IC932	POWER MODULE	RT62	DISCHARGE TEMP. THERMISTOR	X63, X64, X66	RELAY
L61	REACTOR	RT64	FIN TEMP. THERMISTOR	21S4	REVERSING VALVE COIL
LED	LED	RT65	AMBIENT TEMP. THERMISTOR	26H	HEATER PROTECTOR(OPTION PARTS)

MUZ-GE09NAH MUZ-GE12NAH

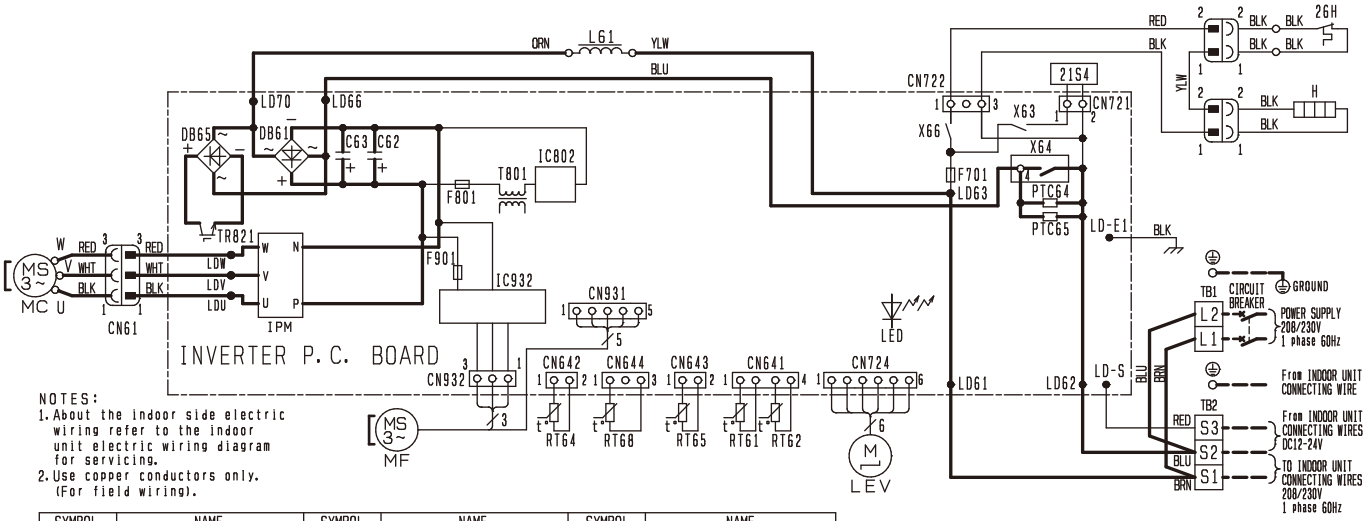

SYMBOL	NAME	SYMBOL	NAME	SYMBOL	NAME
C62, C63	SMOOTHING CAPACITOR	LEV	EXPANSION VALVE COIL	RT68	OUTDOOR HEAT EXCHANGER TEMP. THERMISTOR.
DB61, DB65	DIODE MODULE	MC	COMPRESSOR		
F701, F801, F901	FUSE (T3.15AL250V)	MF	FAN MOTOR	TB1, TB2	TERMINAL BLOCK
H	DEFROST HEATER	PTC64, PTC65	CIRCUIT PROTECTION	TR821	SWITCHING POWER TRANSISTOR
IC802	POWER DEVICE	RT61	DEFROST THERMISTOR	T801	TRANSFORMER
IPM, IC932	POWER MODULE	RT62	DISCHARGE TEMP. THERMISTOR	X63, X64, X66	RELAY
L61	REACTOR	RT64	FIN TEMP. THERMISTOR	21S4	REVERSING VALVE COIL
LED	LED	RT65	AMBIENT TEMP. THERMISTOR	26H	HEATER PROTECTOR

MUZ-GE09NAH2 MUZ-GE12NAH2

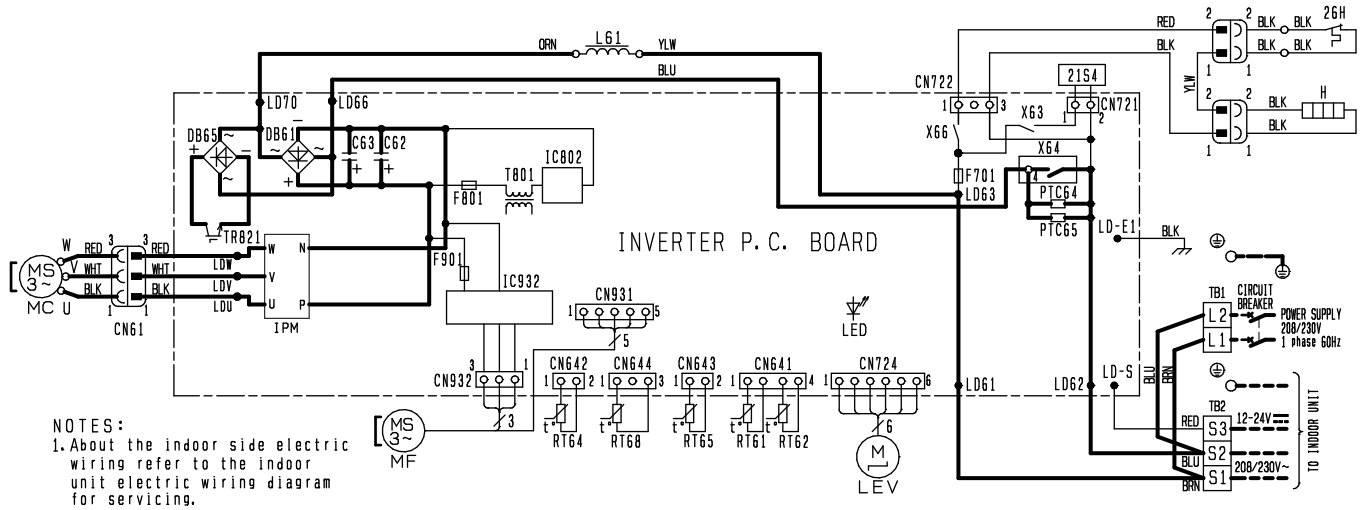

SYMBOL	NAME	SYMBOL	NAME	SYMBOL	NAME
C62, C63	SMOOTHING CAPACITOR	LEV	EXPANSION VALVE COIL	RT68	OUTDOOR HEAT EXCHANGER TEMP. THERMISTOR.
DB61, DB65	DIODE MODULE	MC	COMPRESSOR		
F701, F801, F901	FUSE (T3.15AL250V)	MF	FAN MOTOR	TB1, TB2	TERMINAL BLOCK
H	DEFROST HEATER	PTC64, PTC65	CIRCUIT PROTECTION	TR821	SWITCHING POWER TRANSISTOR
IC802	POWER DEVICE	RT61	DEFROST THERMISTOR	T801	TRANSFORMER
IPM, IC932	POWER MODULE	RT62	DISCHARGE TEMP. THERMISTOR	X63, X64, X66	RELAY
L61	REACTOR	RT64	FIN TEMP. THERMISTOR	21S4	REVERSING VALVE COIL
LED	LED	RT65	AMBIENT TEMP. THERMISTOR	26H	HEATER PROTECTOR

MUY-GE09NA MUY-GE12NA

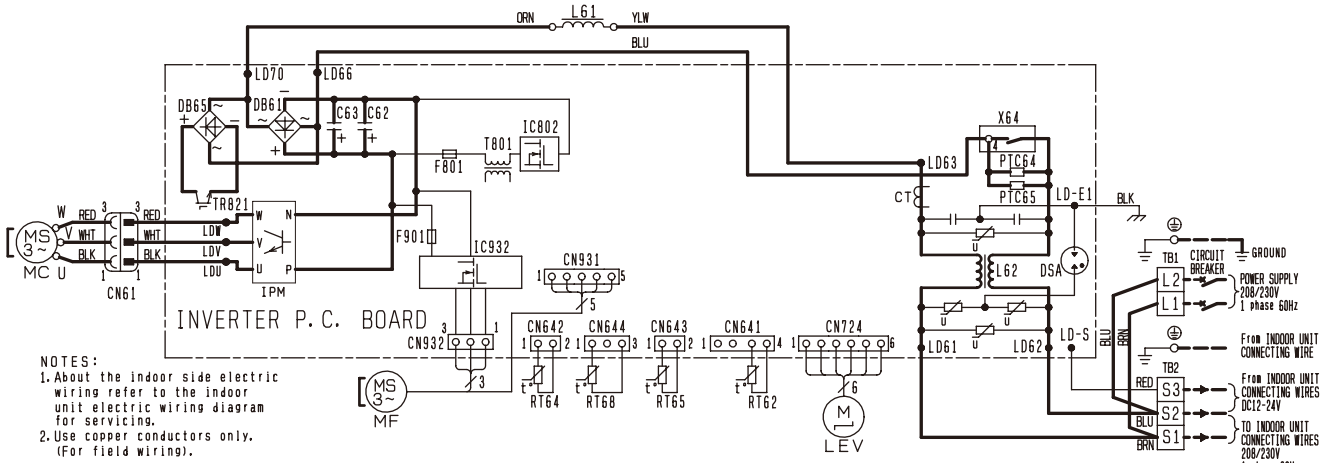

NOTES:
1. About the indoor side electric wiring refer to the indoor unit electric wiring diagram for servicing.
2. Use copper conductors only. (For field wiring).

SYMBOL	NAME	SYMBOL	NAME	SYMBOL	NAME
CT	CURRENT TRANSFORMER	L62	CMC COIL	RT68	OUTDOOR HEAT EXCHANGER TEMP. THERMISTOR.
C62, C63	SMOOTHING CAPACITOR	LEV	EXPANSION VALVE COIL		
DB61, DB65	DIODE MODULE	MC	COMPRESSOR	TB1, TB2	TERMINAL BLOCK
DSA	SURGE ABSORBER	MF	FAN MOTOR	TR821	SWITCHING POWER TRANSISTOR
F801, F901	FUSE (T3.15AL250V)	PTC64, PTC65	CIRCUIT PROTECTION	T801	TRANSFORMER
IC802	INTELLIGENT POWER DEVICE	RT62	DISCHARGE TEMP. THERMISTOR	X64	RELAY
IPM, IC932	INTELLIGENT POWER MODULE	RT64	FIN TEMP. THERMISTOR		
L61	REACTOR	RT65	AMBIENT TEMP. THERMISTOR		

MUY-GE09NA2 MUY-GE12NA2

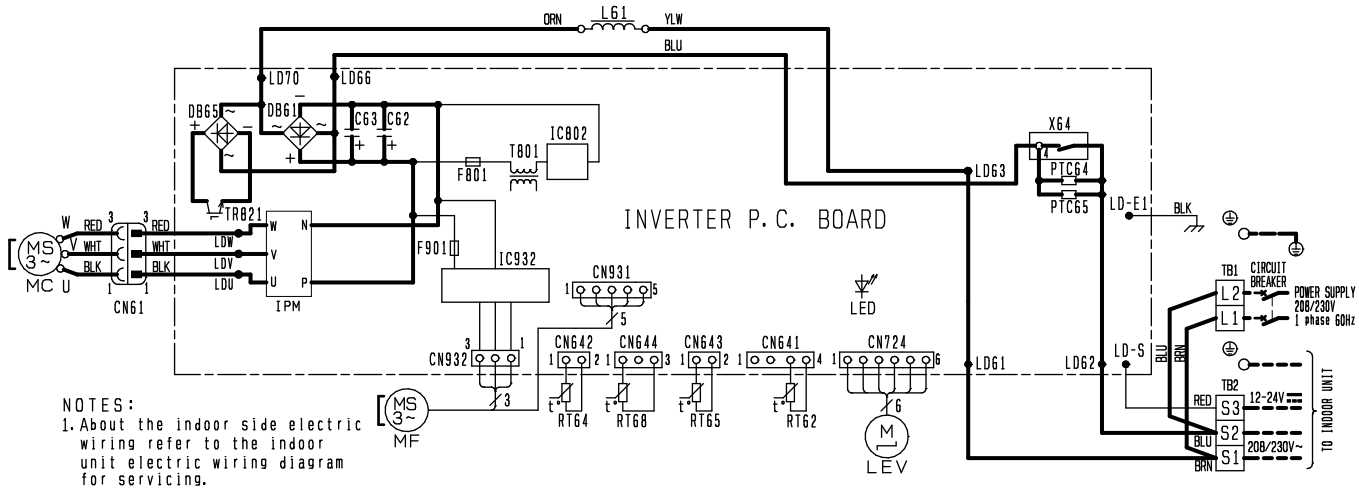

NOTES:
1. About the indoor side electric wiring refer to the indoor unit electric wiring diagram for servicing.
2. Use copper conductors only. (For field wiring).
3. Symbols indicate, ☐☐☐:Terminal block

SYMBOL	NAME	SYMBOL	NAME	SYMBOL	NAME
C62, C63	SMOOTHING CAPACITOR	MC	COMPRESSOR	TB1, TB2	TERMINAL BLOCK
DB61, DB65	DIODE MODULE	MF	FAN MOTOR	TR821	SWITCHING POWER TRANSISTOR
F801, F901	FUSE (T3.15AL250V)	PTC64, PTC65	CIRCUIT PROTECTION	T801	TRANSFORMER
IC802	POWER DEVICE	RT62	DISCHARGE TEMP. THERMISTOR	X64	RELAY
IPM, IC932	POWER MODULE	RT64	FIN TEMP. THERMISTOR		
L61	REACTOR	RT65	AMBIENT TEMP. THERMISTOR		
LED	LED	RT68	OUTDOOR HEAT EXCHANGER TEMP. THERMISTOR.		
LEV	EXPANSION VALVE COIL				

MUZ-GE15NA

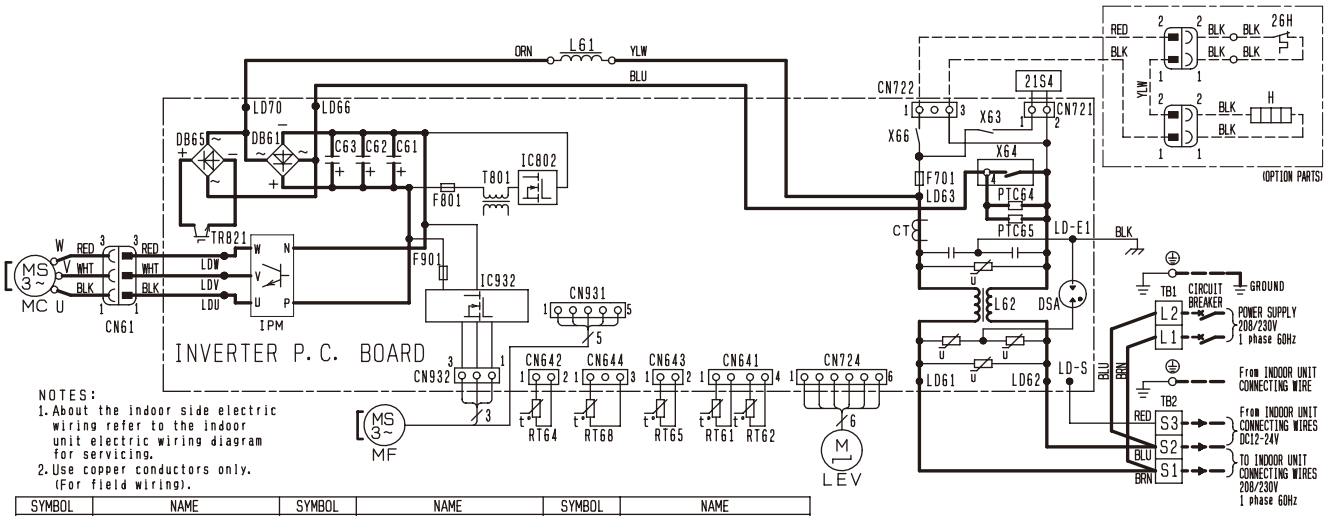

SYMBOL	NAME	SYMBOL	NAME	SYMBOL	NAME
CT	CURRENT TRANSFORMER	L62	CMC COIL	RT68	OUTDOOR HEAT EXCHANGER TEMP. THERMISTOR.
C61, C62, C63	SMOOTHING CAPACITOR	LEV	EXPANSION VALVE COIL		
DB61, DB65	DIODE MODULE	MC	COMPRESSOR	TB1, TB2	TERMINAL BLOCK
DSA	SURGE ABSORBER	MF	FAN MOTOR	TR821	SWITCHING POWER TRANSISTOR
F701, F801, F901	FUSE (T3.15AL250V)	PTC64, PTC65	CIRCUIT PROTECTION	T801	TRANSFORMER
H	DEFROST HEATER(OPTION PARTS)	RT61	DEFROST THERMISTOR	X63, X64, X66	RELAY
IC802	INTELLIGENT POWER DEVICE	RT62	DISCHARGE TEMP. THERMISTOR	21S4	REVERSING VALVE COIL
IPM, IC932	INTELLIGENT POWER MODULE	RT64	FIN TEMP. THERMISTOR	26H	HEATER PROTECTOR(OPTION PARTS)
L61	REACTOR	RT65	AMBIENT TEMP. THERMISTOR		

MUZ-GE15NA- 1

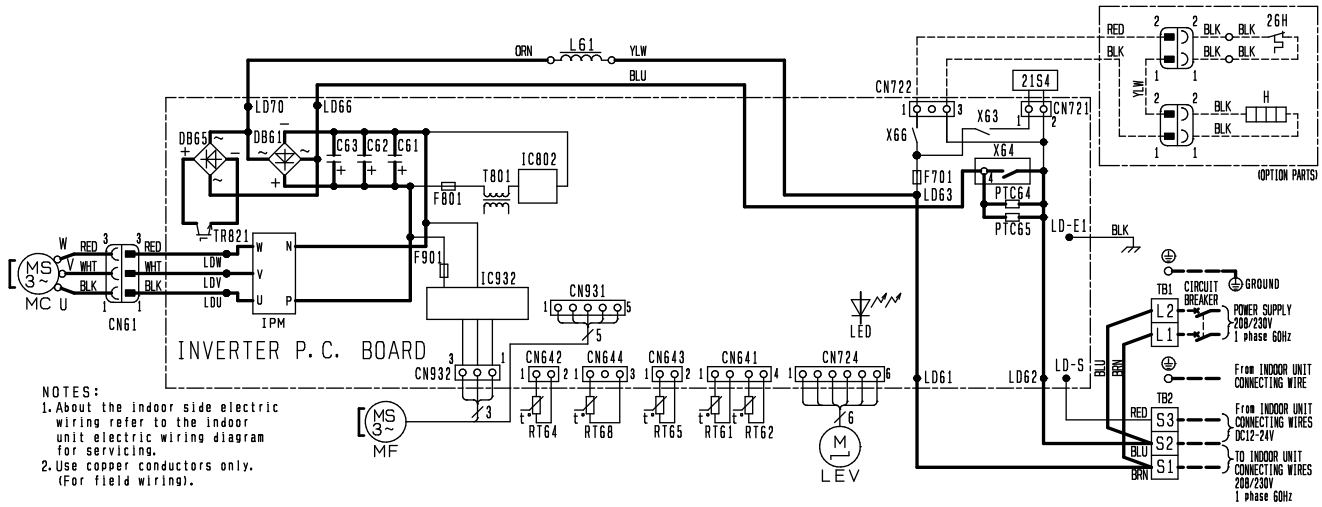

SYMBOL	NAME	SYMBOL	NAME	SYMBOL	NAME
C61, C62, C63	SMOOTHING CAPACITOR	LEV	EXPANSION VALVE COIL	RT68	OUTDOOR HEAT EXCHANGER TEMP. THERMISTOR.
DB61, DB65	DIODE MODULE	MC	COMPRESSOR		
F701, F801, F901	FUSE (T3.15AL250V)	MF	FAN MOTOR	TB1, TB2	TERMINAL BLOCK
H	DEFROST HEATER(OPTION PARTS)	PTC64, PTC65	CIRCUIT PROTECTION	TR821	SWITCHING POWER TRANSISTOR
IC802	POWER DEVICE	RT61	DEFROST THERMISTOR	T801	TRANSFORMER
IPM, IC932	POWER MODULE	RT62	DISCHARGE TEMP. THERMISTOR	X63, X64, X66	RELAY
L61	REACTOR	RT64	FIN TEMP. THERMISTOR	21S4	REVERSING VALVE COIL
LED	LED	RT65	AMBIENT TEMP. THERMISTOR	26H	HEATER PROTECTOR(OPTION PARTS)

MUZ-GE15NA2

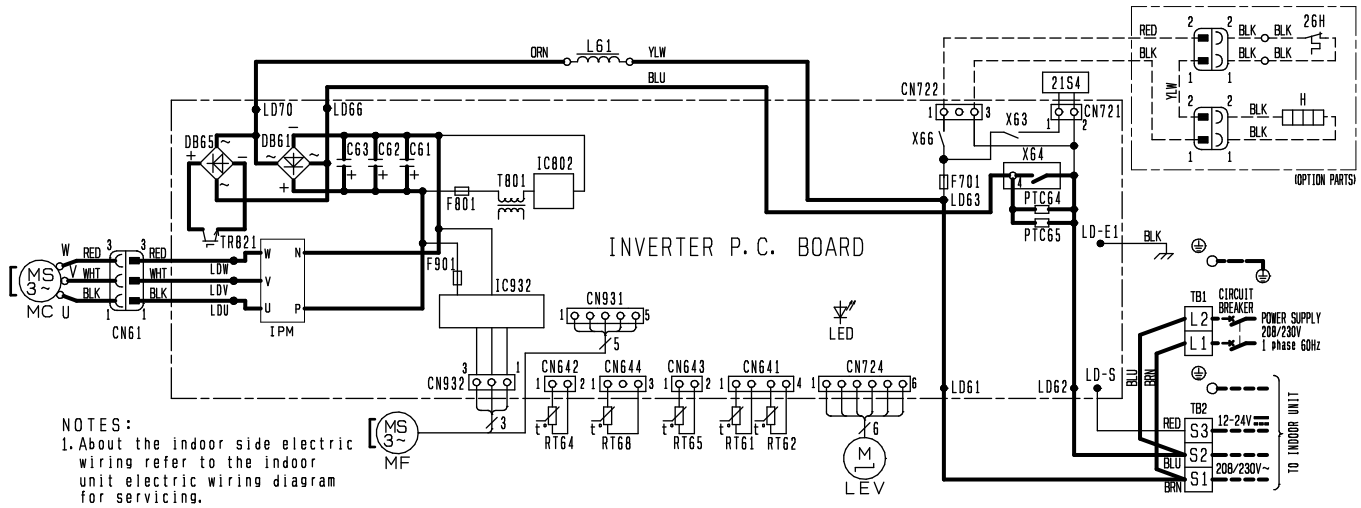

NOTES:
1. About the indoor side electric wiring refer to the indoor unit electric wiring diagram for servicing.
2. Use copper conductors only. (For field wiring).
3. Symbols indicate, ☐☐☐:Terminal block

SYMBOL	NAME	SYMBOL	NAME	SYMBOL	NAME
C61, C62, C63	SMOOTHING CAPACITOR	LEV	EXPANSION VALVE COIL	RT68	OUTDOOR HEAT EXCHANGER TEMP. THERMISTOR.
DB61, DB65	DIODE MODULE	MC	COMPRESSOR		
F701, F801, F901	FUSE (T3.15AL250V)	MF	FAN MOTOR	TB1, TB2	TERMINAL BLOCK
H	DEFROST HEATER(OPTION PARTS)	PTC64, PTC65	CIRCUIT PROTECTION	TR821	SWITCHING POWER TRANSISTOR
IC802	POWER DEVICE	RT61	DEFROST THERMISTOR	T801	TRANSFORMER
IPM, IC932	POWER MODULE	RT62	DISCHARGE TEMP. THERMISTOR	X63, X64, X66	RELAY
L61	REACTOR	RT64	FIN TEMP. THERMISTOR	21S4	REVERSING VALVE COIL
LED	LED	RT65	AMBIENT TEMP. THERMISTOR	26H	HEATER PROTECTOR(OPTION PARTS)

MUZ-GE15NAH

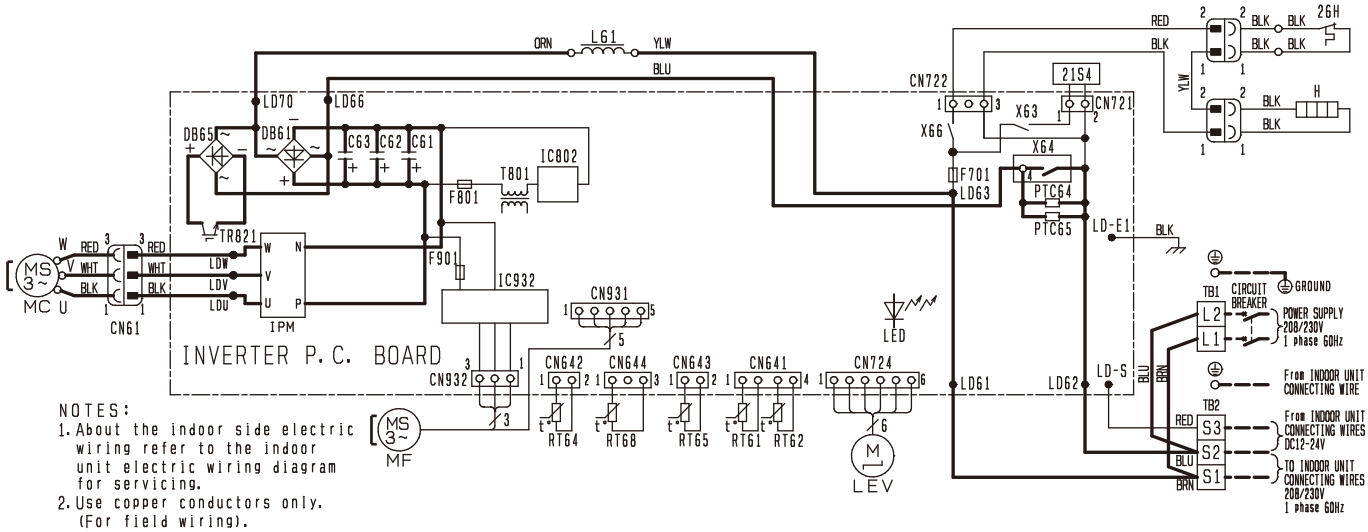

NOTES:
1. About the indoor side electric wiring refer to the indoor unit electric wiring diagram for servicing.
2. Use copper conductors only. (For field wiring).

SYMBOL	NAME	SYMBOL	NAME	SYMBOL	NAME
C61, C62, C63	SMOOTHING CAPACITOR	LEV	EXPANSION VALVE COIL	RT68	OUTDOOR HEAT EXCHANGER TEMP. THERMISTOR.
DB61, DB65	DIODE MODULE	MC	COMPRESSOR		
F701, F801, F901	FUSE (T3.15AL250V)	MF	FAN MOTOR	TB1, TB2	TERMINAL BLOCK
H	DEFROST HEATER	PTC64, PTC65	CIRCUIT PROTECTION	TR821	SWITCHING POWER TRANSISTOR
IC802	POWER DEVICE	RT61	DEFROST THERMISTOR	T801	TRANSFORMER
IPM, IC932	POWER MODULE	RT62	DISCHARGE TEMP. THERMISTOR	X63, X64, X66	RELAY
L61	REACTOR	RT64	FIN TEMP. THERMISTOR	21S4	REVERSING VALVE COIL
LED	LED	RT65	AMBIENT TEMP. THERMISTOR	26H	HEATER PROTECTOR

MUZ-GE15NAH2

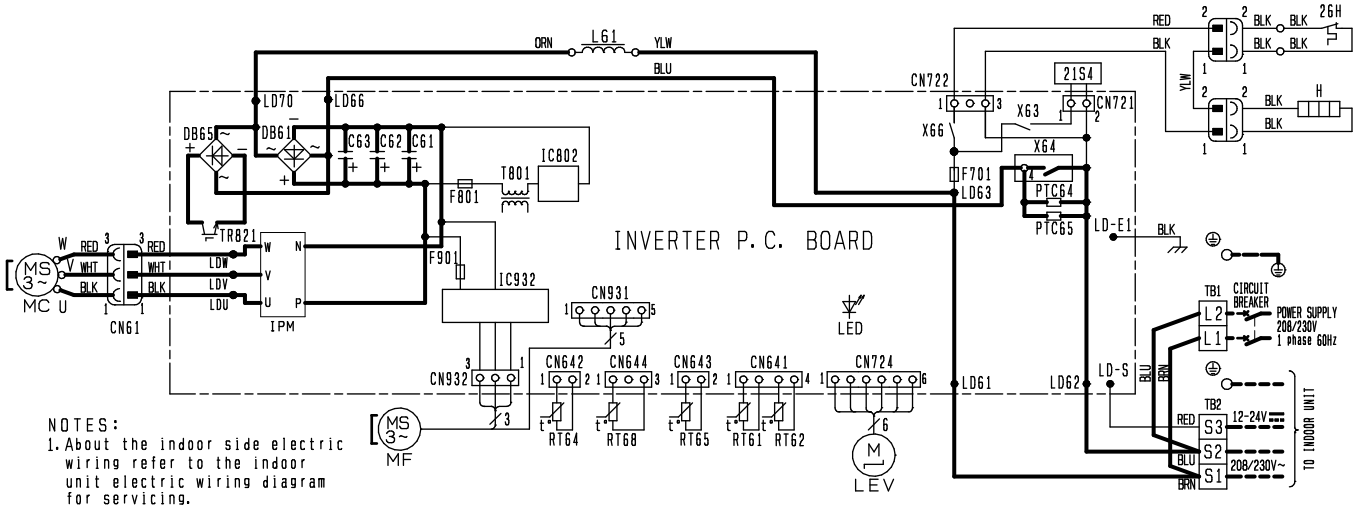

NOTES:
1. About the indoor side electric wiring refer to the indoor unit electric wiring diagram for servicing.
2. Use copper conductors only. (For field wiring).
3. Symbols indicate, ☐☐☐:Terminal block

SYMBOL	NAME	SYMBOL	NAME	SYMBOL	NAME
C61, C62, C63	SMOOTHING CAPACITOR	LEV	EXPANSION VALVE COIL	RT68	OUTDOOR HEAT EXCHANGER TEMP. THERMISTOR.
DB61, DB65	DIODE MODULE	MC	COMPRESSOR		
F701, F801, F901	FUSE (T3.15AL250V)	MF	FAN MOTOR	TB1, TB2	TERMINAL BLOCK
H	DEFROST HEATER	PTC64, PTC65	CIRCUIT PROTECTION	TR821	SWITCHING POWER TRANSISTOR
IC802	POWER DEVICE	RT61	DEFROST THERMISTOR	T801	TRANSFORMER
IPM, IC932	POWER MODULE	RT62	DISCHARGE TEMP. THERMISTOR	X63, X64, X66	RELAY
L61	REACTOR	RT64	FIN TEMP. THERMISTOR	21S4	REVERSING VALVE COIL
LED	LED	RT65	AMBIENT TEMP. THERMISTOR	26H	HEATER PROTECTOR

MUY-GE15NA

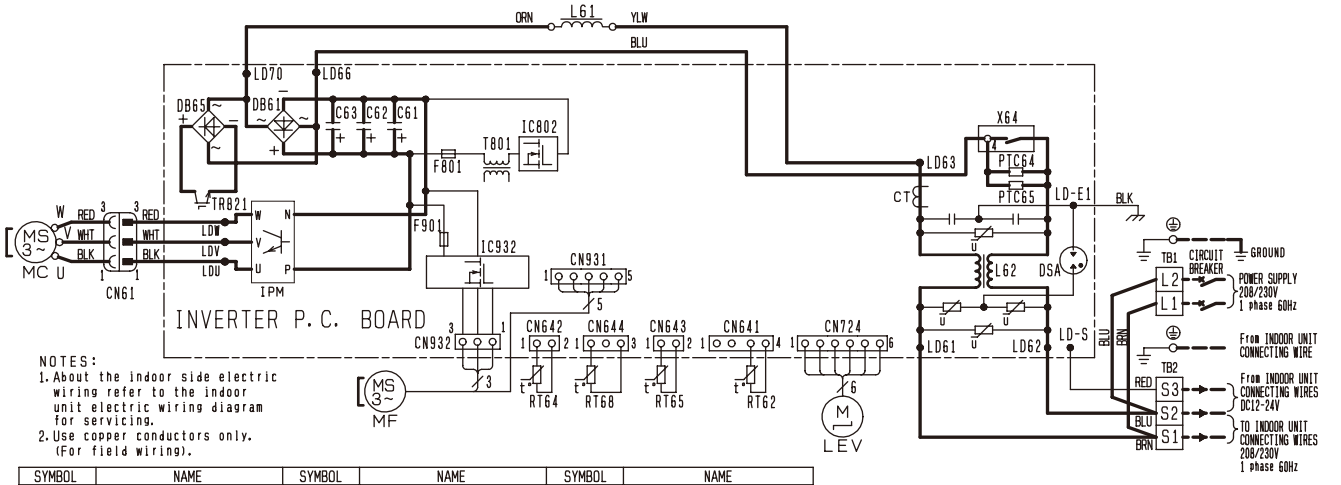

NOTES:
1. About the indoor side electric wiring refer to the indoor unit electric wiring diagram for servicing.
2. Use copper conductors only. (For field wiring).

SYMBOL	NAME	SYMBOL	NAME	SYMBOL	NAME
CT	CURRENT TRANSFORMER	L62	CMC COIL	RT68	OUTDOOR HEAT EXCHANGER TEMP. THERMISTOR.
C61, C62, C63	SMOOTHING CAPACITOR	LEV	EXPANSION VALVE COIL		
DB61, DB65	DIODE MODULE	MC	COMPRESSOR	TB1, TB2	TERMINAL BLOCK
DSA	SURGE ABSORBER	MF	FAN MOTOR	TR821	SWITCHING POWER TRANSISTOR
F801, F901	FUSE (T3.15AL250V)	PTC64, PTC65	CIRCUIT PROTECTION	T801	TRANSFORMER
IC802	INTELLIGENT POWER DEVICE	RT62	DISCHARGE TEMP. THERMISTOR	X64	RELAY
IPM, IC932	INTELLIGENT POWER MODULE	RT64	FIN TEMP. THERMISTOR		
L61	REACTOR	RT65	AMBIENT TEMP. THERMISTOR		

MUY-GE15NA- 1

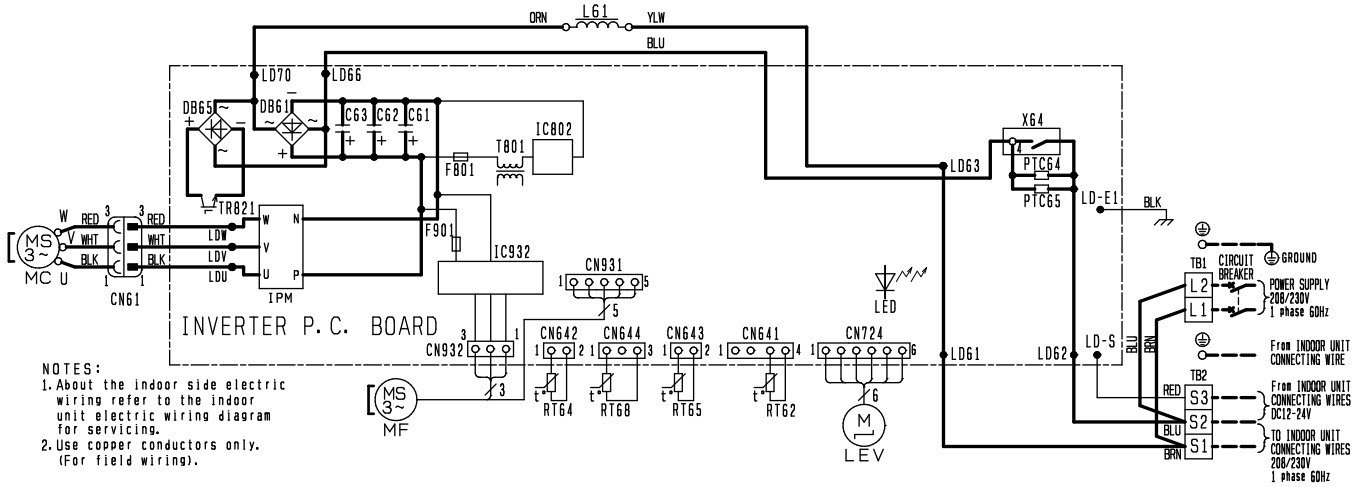

SYMBOL	NAME	SYMBOL	NAME	SYMBOL	NAME
C61, C62, C63	SMOOTHING CAPACITOR	MC	COMPRESSOR	TB1, TB2	TERMINAL BLOCK
DB61, DB65	DIODE MODULE	MF	FAN MOTOR	TR821	SWITCHING POWER TRANSISTOR
F801, F901	FUSE (T3.15AL250V)	PTC64, PTC65	CIRCUIT PROTECTION	T801	TRANSFORMER
IC802	POWER DEVICE	RT62	DISCHARGE TEMP. THERMISTOR	X64	RELAY
IPM, IC932	POWER MODULE	RT64	FIN TEMP. THERMISTOR		
LED	LED	RT65	AMBIENT TEMP. THERMISTOR		
LEV	EXPANSION VALVE COIL	RT68	OUTDOOR HEAT EXCHANGER TEMP. THERMISTOR.		
L61	REACTOR				

MUY-GE15NA2

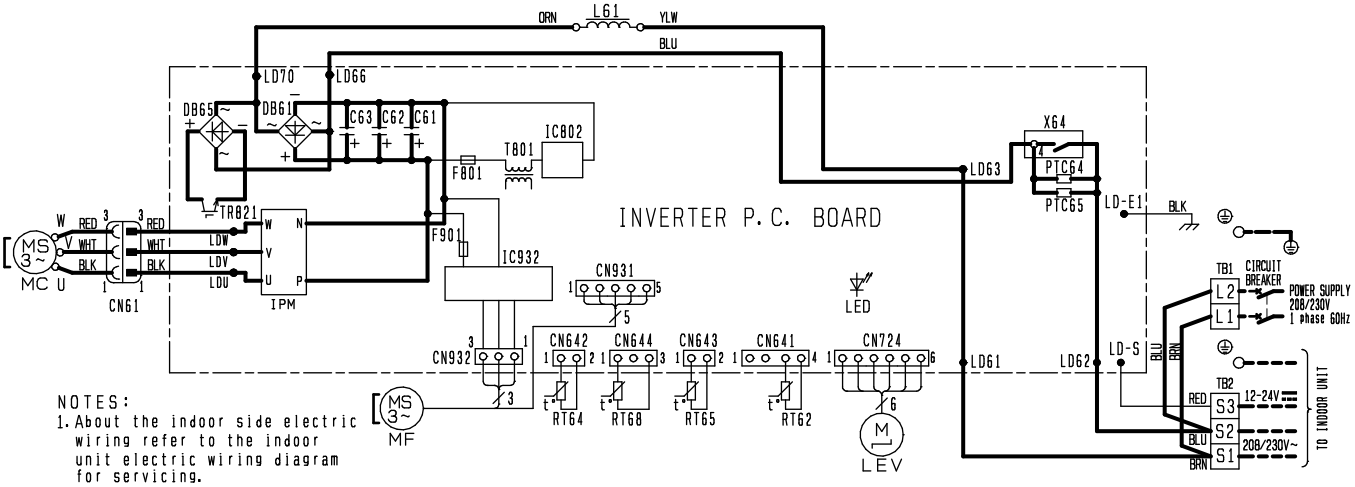

SYMBOL	NAME	SYMBOL	NAME	SYMBOL	NAME
C61, C62, C63	SMOOTHING CAPACITOR	MC	COMPRESSOR	TB1, TB2	TERMINAL BLOCK
DB61, DB65	DIODE MODULE	MF	FAN MOTOR	TR821	SWITCHING POWER TRANSISTOR
F801, F901	FUSE (T3.15AL250V)	PTC64, PTC65	CIRCUIT PROTECTION	T801	TRANSFORMER
IC802	POWER DEVICE	RT62	DISCHARGE TEMP. THERMISTOR	X64	RELAY
IPM, IC932	POWER MODULE	RT64	FIN TEMP. THERMISTOR		
LED	LED	RT65	AMBIENT TEMP. THERMISTOR		
LEV	EXPANSION VALVE COIL	RT68	OUTDOOR HEAT EXCHANGER TEMP. THERMISTOR.		
L61	REACTOR				

MUZ-GE18NA

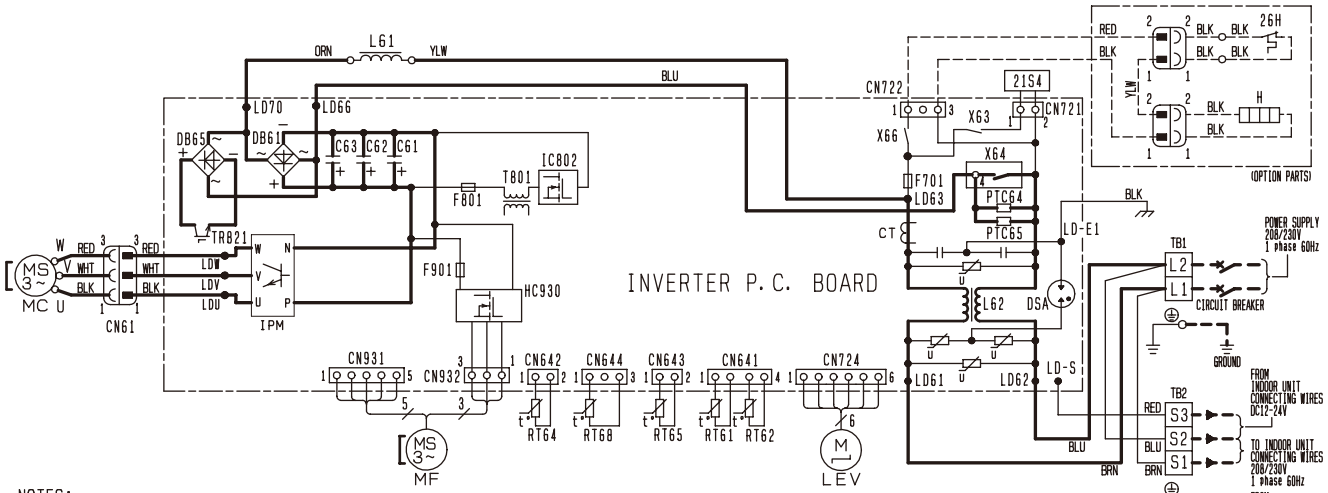

NOTES:
1. About the indoor side electric wiring refer to the indoor unit electric wiring diagram for servicing.
2. Use copper conductors only. (For field wiring).

SYMBOL	NAME	SYMBOL	NAME	SYMBOL	NAME
CT	CURRENT TRANSFORMER	L62	CMC COIL	RT68	OUTDOOR HEAT EXCHANGER TEMP. THERMISTOR.
C61, C62, C63	SMOOTHING CAPACITOR	LEV	EXPANSION VALVE COIL		
DB61, DB65	DIODE MODULE	MC	COMPRESSOR	TB1, TB2	TERMINAL BLOCK
DSA	SURGE ABSORBER	MF	FAN MOTOR	TR821	SWITCHING POWER TRANSISTOR
F701, F801, F901	FUSE (T3.15AL250V)	PTC64, PTC65	CIRCUIT PROTECTION	T801	TRANSFORMER
H	DEFROST HEATER(OPTION PARTS)	RT61	DEFROST THERMISTOR	X63, X64, X66	RELAY
HC930, IPM	INTELLIGENT POWER MODULE	RT62	DISCHARGE TEMP. THERMISTOR	21S4	REVERSING VALVE COIL
IC802	INTELLIGENT POWER DEVICE	RT64	FIN TEMP. THERMISTOR	26H	HEATER PROTECTOR(OPTION PARTS)
L61	REACTOR	RT65	AMBIENT TEMP. THERMISTOR		

MUZ-GE18NA- 1

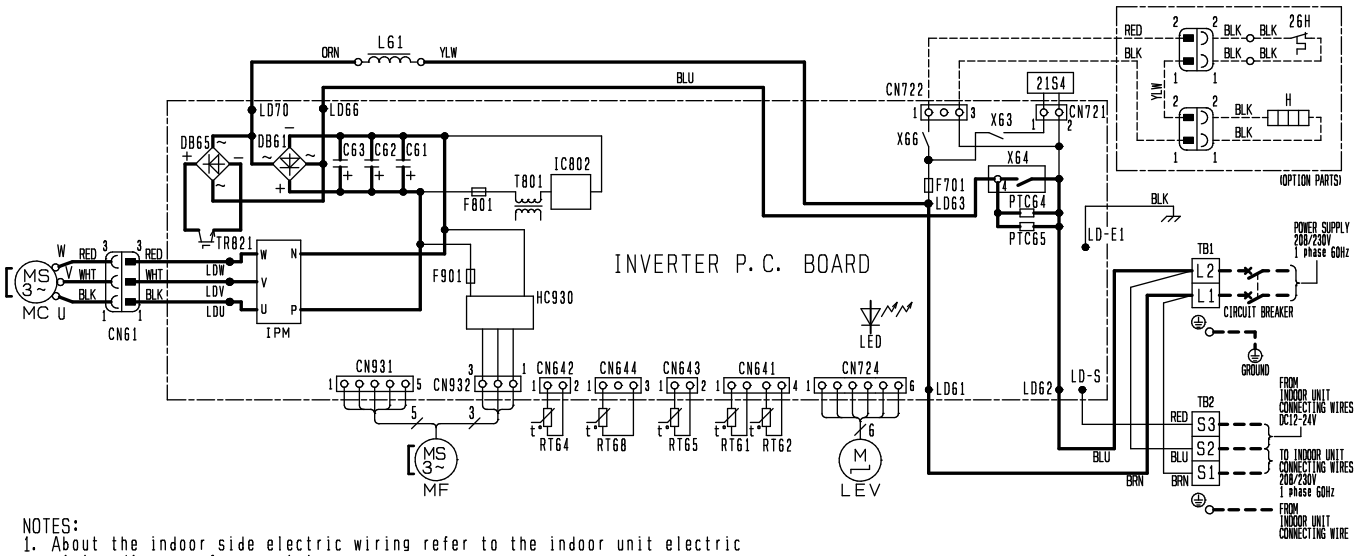

NOTES:
1. About the indoor side electric wiring refer to the indoor unit electric wiring diagram for servicing.
2. Use copper conductors only. (For field wiring).

SYMBOL	NAME	SYMBOL	NAME	SYMBOL	NAME
C61, C62, C63	SMOOTHING CAPACITOR	LEV	EXPANSION VALVE COIL	RT68	OUTDOOR HEAT EXCHANGER TEMP. THERMISTOR.
DB61, DB65	DIODE MODULE	MC	COMPRESSOR		
F701, F801, F901	FUSE (T3.15AL250V)	MF	FAN MOTOR	TB1, TB2	TERMINAL BLOCK
H	DEFROST HEATER(OPTION PARTS)	PTC64, PTC65	CIRCUIT PROTECTION	TR821	SWITCHING POWER TRANSISTOR
HC930, IPM	POWER MODULE	RT61	DEFROST THERMISTOR	T801	TRANSFORMER
IC802	POWER DEVICE	RT62	DISCHARGE TEMP. THERMISTOR	X63, X64, X66	RELAY
L61	REACTOR	RT64	FIN TEMP. THERMISTOR	21S4	REVERSING VALVE COIL
LED	LED	RT65	AMBIENT TEMP. THERMISTOR	26H	HEATER PROTECTOR(OPTION PARTS)

MUZ-GE18NAH

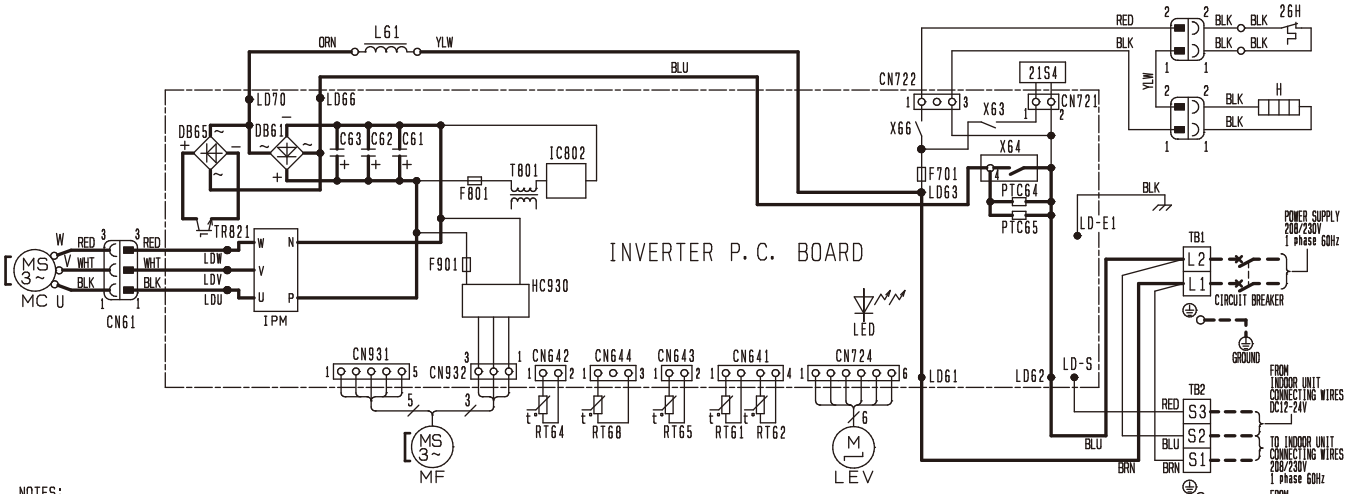

NOTES:
1. About the indoor side electric wiring refer to the indoor unit electric wiring diagram for servicing.
2. Use copper conductors only. (For field wiring).

SYMBOL	NAME	SYMBOL	NAME	SYMBOL	NAME
C61, C62, C63	SMOOTHING CAPACITOR	LEV	EXPANSION VALVE COIL	RT68	OUTDOOR HEAT EXCHANGER TEMP. THERMISTOR.
DB61, DB65	DIODE MODULE	MC	COMPRESSOR		
F701, F801, F901	FUSE (T3.15AL250V)	MF	FAN MOTOR	TB1, TB2	TERMINAL BLOCK
H	DEFROST HEATER	PTC64, PTC65	CIRCUIT PROTECTION	TR821	SWITCHING POWER TRANSISTOR
HC930, IPM	POWER MODULE	RT61	DEFROST THERMISTOR	T801	TRANSFORMER
IC802	POWER DEVICE	RT62	DISCHARGE TEMP. THERMISTOR	X63, X64, X66	RELAY
L61	REACTOR	RT64	FIN TEMP. THERMISTOR	21S4	REVERSING VALVE COIL
LED	LED	RT65	AMBIENT TEMP. THERMISTOR	26H	HEATER PROTECTOR

MUY-GE18NA

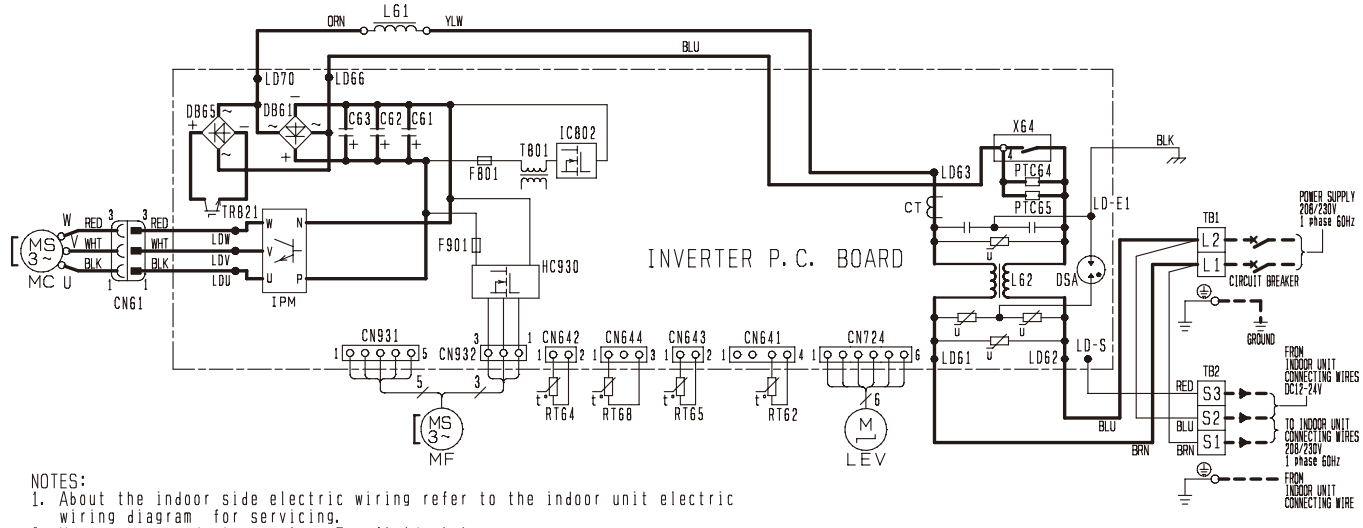

NOTES:
1. About the indoor side electric wiring refer to the indoor unit electric wiring diagram for servicing.
2. Use copper conductors only. (For field wiring).

SYMBOL	NAME	SYMBOL	NAME	SYMBOL	NAME
CT	CURRENT TRANSFORMER	L62	CMC COIL	RT68	OUTDOOR HEAT EXCHANGER TEMP. THERMISTOR.
C61, C62, C63	SMOOTHING CAPACITOR	LEV	EXPANSION VALVE COIL		
DB61, DB65	DIODE MODULE	MC	COMPRESSOR	TB1, TB2	TERMINAL BLOCK
DSA	SURGE ABSORBER	MF	FAN MOTOR	TR821	SWITCHING POWER TRANSISTOR
F801, F901	FUSE (T3.15AL250V)	PTC64, PTC65	CIRCUIT PROTECTION	T801	TRANSFORMER
HC930, IPM	INTELLIGENT POWER MODULE	RT62	DISCHARGE TEMP. THERMISTOR	X64	RELAY
IC802	INTELLIGENT POWER DEVICE	RT64	FIN TEMP. THERMISTOR		
L61	REACTOR	RT65	AMBIENT TEMP. THERMISTOR		

MUY-GE18NA- 1

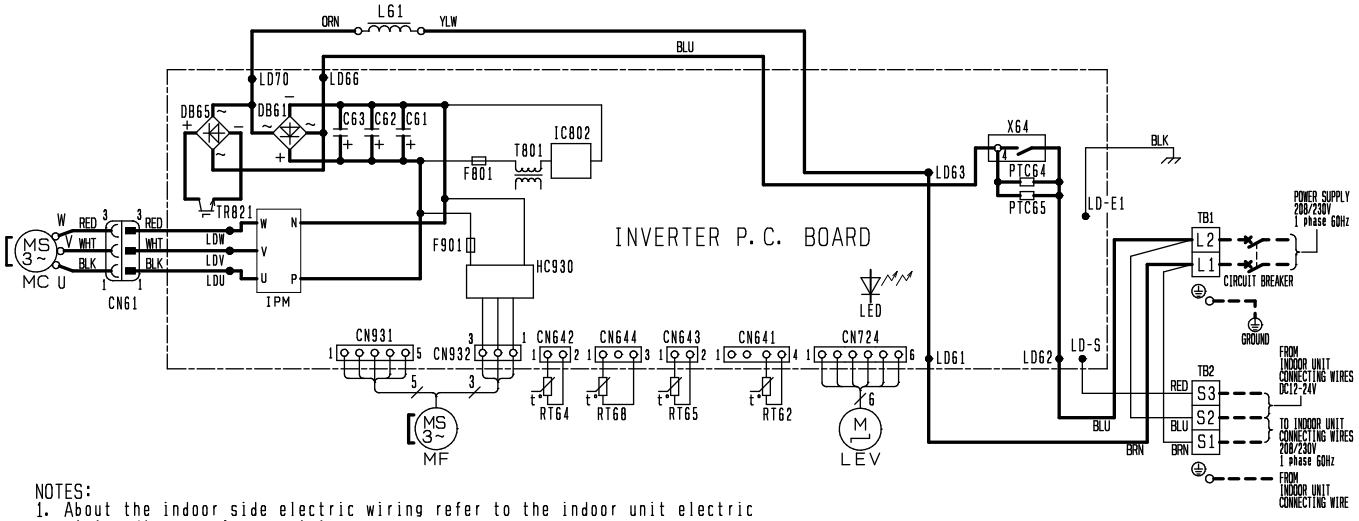

NOTES:
1. About the indoor side electric wiring refer to the indoor unit electric wiring diagram for servicing.
2. Use copper conductors only. (For field wiring).

SYMBOL	NAME	SYMBOL	NAME	SYMBOL	NAME
C61, C62, C63	SMOOTHING CAPACITOR	MC	COMPRESSOR	TB1, TB2	TERMINAL BLOCK
DB61, DB65	DIODE MODULE	MF	FAN MOTOR	TR821	SWITCHING POWER TRANSISTOR
F801, F901	FUSE (T3.15AL250V)	PTC64, PTC65	CIRCUIT PROTECTION	T801	TRANSFORMER
HC930, IPM	POWER MODULE	RT62	DISCHARGE TEMP. THERMISTOR	X64	RELAY
IC802	POWER DEVICE	RT64	FIN TEMP. THERMISTOR		
LED	LED	RT65	AMBIENT TEMP. THERMISTOR		
LEV	EXPANSION VALVE COIL	RT68	OUTDOOR HEAT EXCHANGER TEMP. THERMISTOR.		
L61	REACTOR				

MUZ-GE24NA

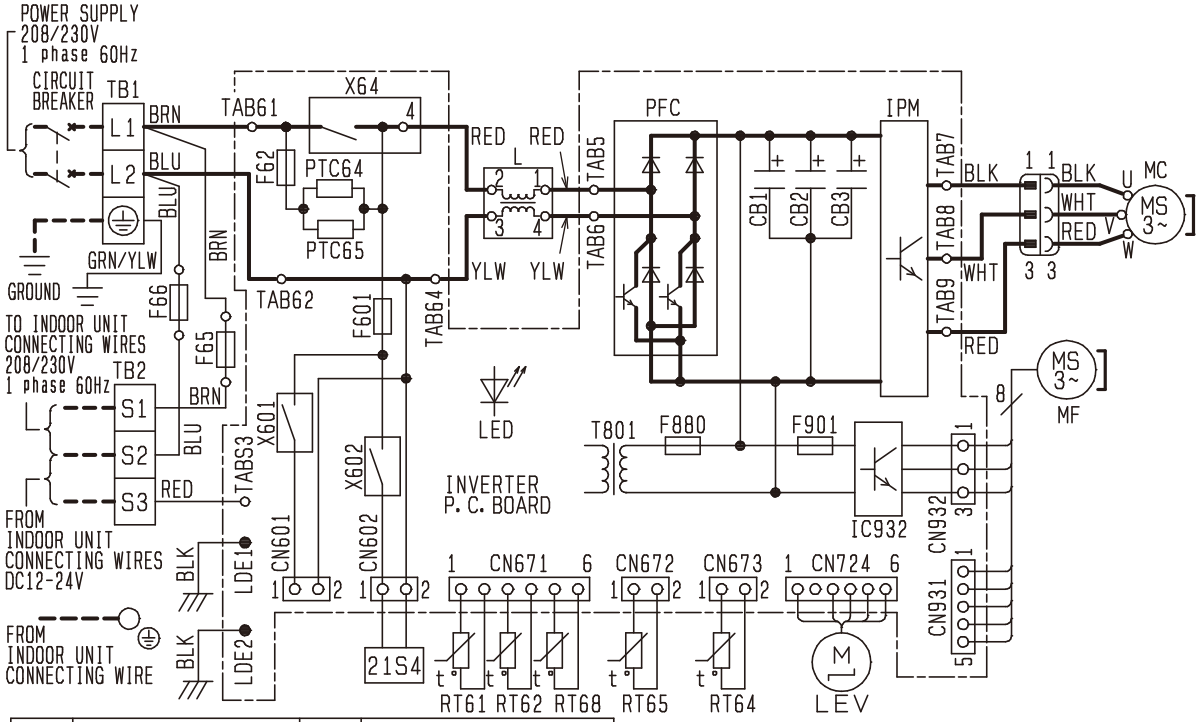

SYMBOL	NAME	SYMBOL	NAME
CB1～3	SMOOTHING CAPACITOR	PTC64	CIRCUIT PROTECTION
F601	FUSE (T3.15AL250V)	PTC65	CIRCUIT PROTECTION
F62	FUSE (T2AL250V)	RT61	DEFROST THERMISTOR
F65, F66	FUSE (T6.3AL250V)	RT62	DISCHARGE TEMP. THERMISTOR
F880	FUSE (T3.15AL250V)	RT64	FIN TEMP. THERMISTOR
F901	FUSE (T3.15AL250V)	RT65	AMBIENT TEMP. THERMISTOR
IC932	INTELLIGENT POWER MODULE	RT68	OUTDOOR HEAT EXCHANGER TEMP. THERMISTOR
IPM	INTELLIGENT POWER MODULE		
L	REACTOR	TB1, TB2	TERMINAL BLOCK
LEV	EXPANSION VALVE COIL	T801	TRANSFORMER
MC	COMPRESSOR	X601, X602	RELAY
MF	FAN MOTOR	X64	RELAY
PFC	POWER FACTOR CONTROLLER	21S4	REVERSING VALVE SOLENOID COIL

NOTES
1. About the indoor side electric wiring, refer to the indoor unit electric wiring diagram for servicing.
2. Use copper conductors only (for field wiring).
3. Symbols indicate. ☐☐☐ :Terminal block

MUY-GE24NA

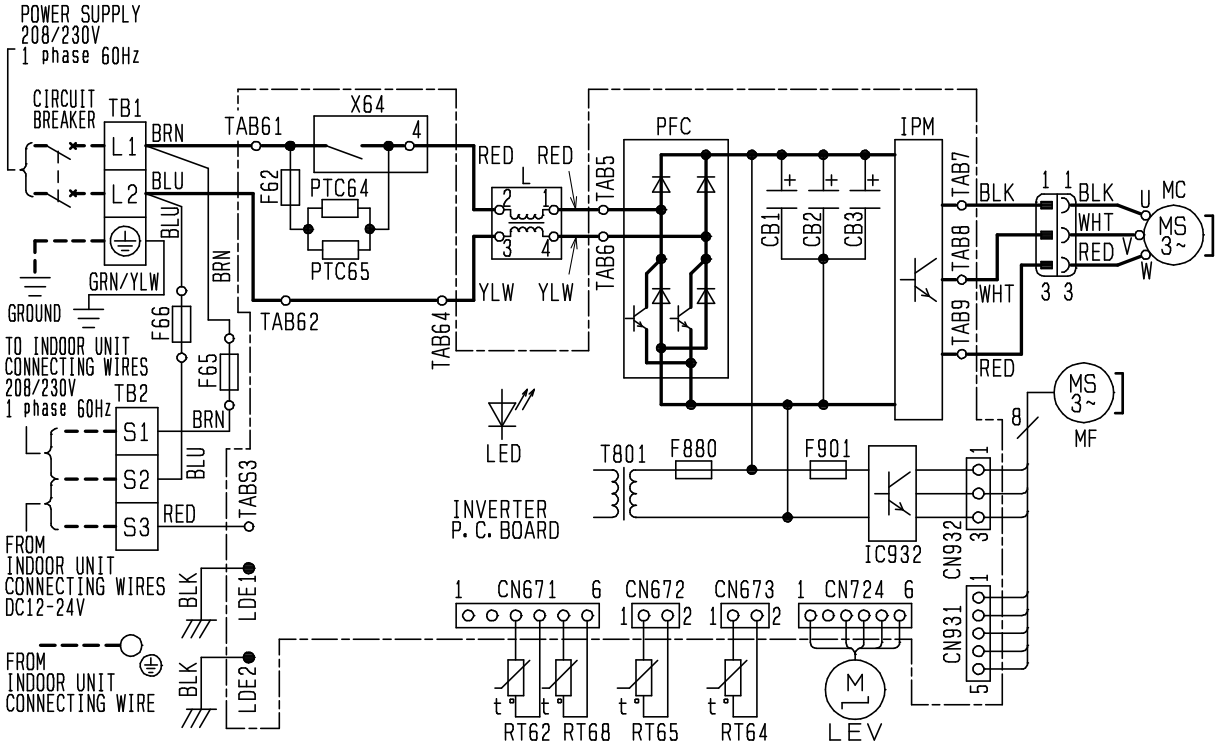

SYMBOL	NAME	SYMBOL	NAME
CB1～3	SMOOTHING CAPACITOR	PFC	POWER FACTOR CONTROLLER
F62	FUSE (T2AL250V)	PTC64	CIRCUIT PROTECTION
F65, F66	FUSE (T6. 3AL250V)	PTC65	CIRCUIT PROTECTION
F880	FUSE (T3. 15AL250V)	RT62	DISCHARGE TEMP. THERMISTOR
F901	FUSE (T3. 15AL250V)	RT64	FIN TEMP. THERMISTOR
IC932	INTELLIGENT POWER MODULE	RT65	AMBIENT TEMP. THERMISTOR
IPM	INTELLIGENT POWER MODULE	RT68	OUTDOOR HEAT EXCHANGER TEMP. THERMISTOR
L	REACTOR		
LEV	EXPANSION VALVE COIL	TB1, TB2	TERMINAL BLOCK
MC	COMPRESSOR	T801	TRANSFORMER
MF	FAN MOTOR	X64	RELAY

NOTES
1. About the indoor side electric wiring, refer to the indoor unit electric wiring diagram for servicing.
2. Use copper conductors only (for field wiring).
3. Symbols indicate. ☐☐☐ : Terminal block

6 REFRIGERANT SYSTEM DIAGRAM

MUZ-GE09NA MUZ-GE09NA2
MUZ-GE09NAH MUZ-GE09NAH2
MUY-GE09NA MUY-GE09NA2

Unit: inch

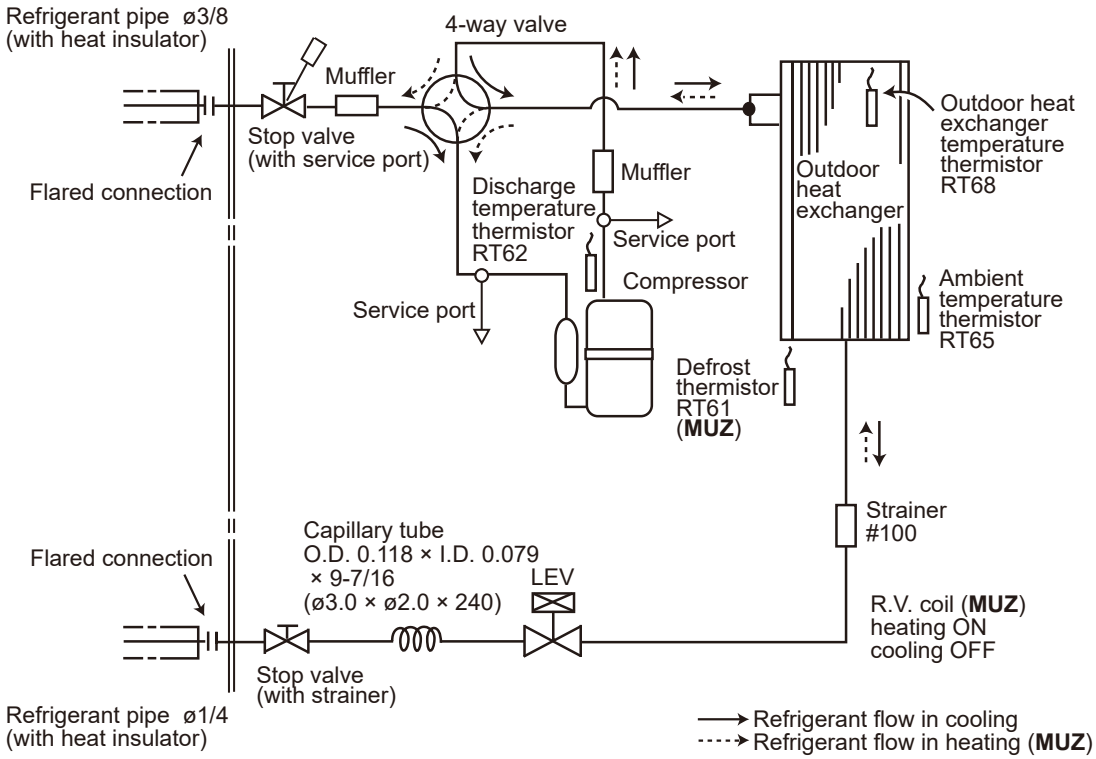

MUZ-GE12NA MUZ-GE12NA2 MUZ-GE15NA MUZ-GE15NA2
MUZ-GE12NAH MUZ-GE12NAH2 MUZ-GE15NAH MUZ-GE15NAH2
MUY-GE12NA MUY-GE12NA2 MUY-GE15NA MUY-GE15NA2

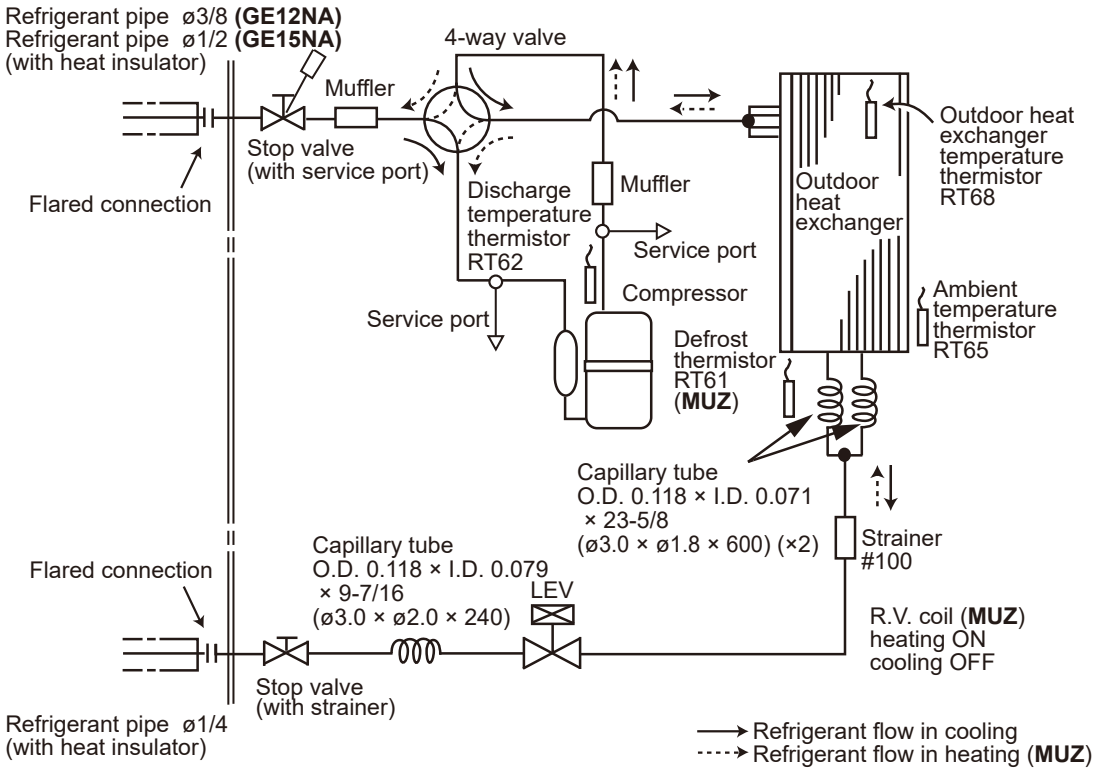

MUZ-GE18NA
MUZ-GE18NAH
MUY-GE18NA

Unit: inch

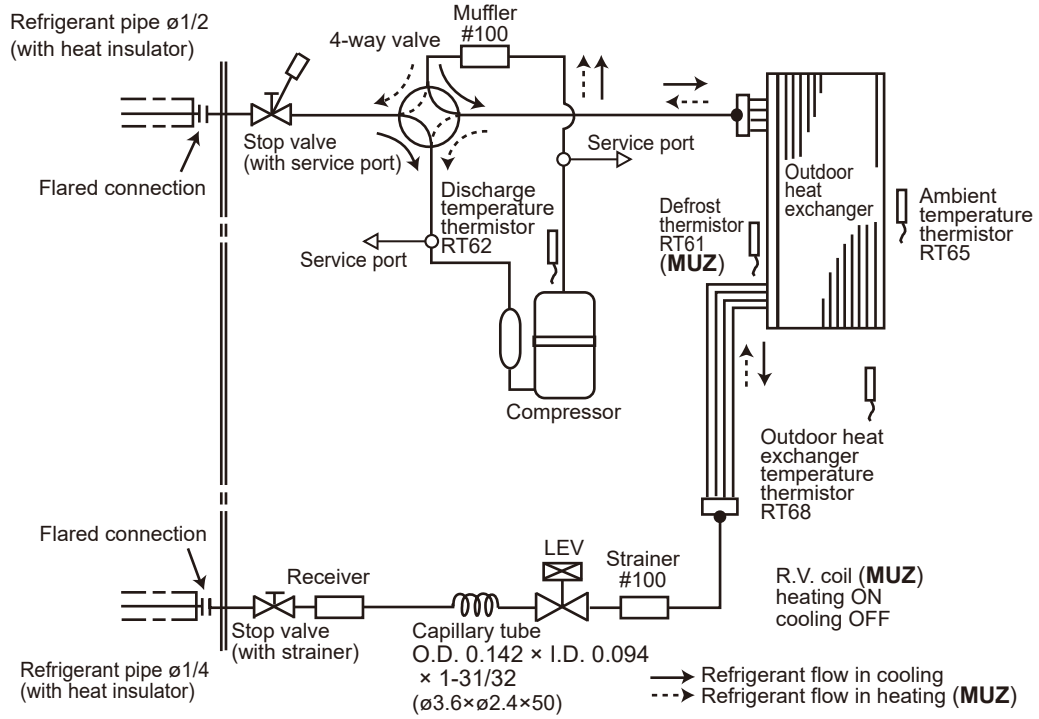

MUZ-GE24NA
MUY-GE24NA

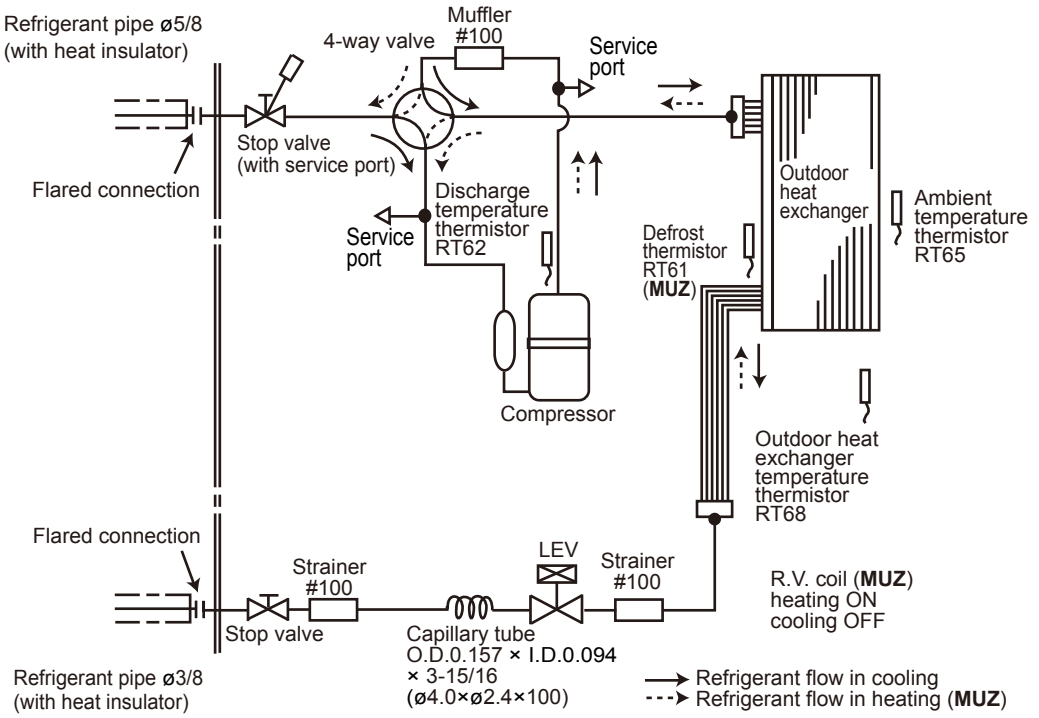

MAX. REFRIGERANT PIPING LENGTH and MAX. HEIGHT DIFFERENCE

Model	Refrigerant piping: ft.		Piping size O.D: in.	
	Max. Length A	Max. Height difference B	Gas	Liquid
MUZ-GE09/12/15NA/NA2 **MUZ-GE09/12/15NAH/NAH2** **MUY-GE09/12/15NA/NA2**	65	40	3/8 **(GE09/12)** 1/2 **(GE15)**	1/4
MUZ-GE18NA **MUZ-GE18NAH** **MUY-GE18NA**	100	50	1/2	
MUZ-GE24NA **MUY-GE24NA**	100	50	5/8	3/8

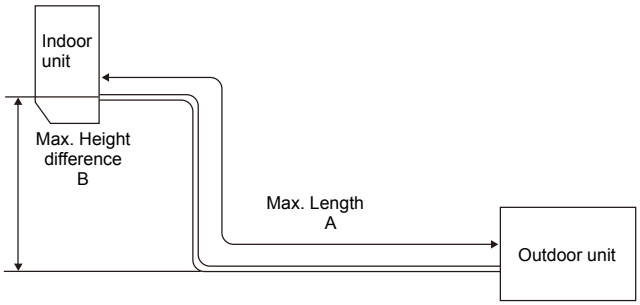

ADDITIONAL REFRIGERANT CHARGE (R410A: oz.)

NOTE: Refrigerant piping exceeding 25 ft. requires additional refrigerant charge according to the calculation.

Model	Outdoor unit precharged	Refrigerant piping length (one way): ft.					
		25	30	40	50	60	65
MUZ-GE09NA/NA2 **MUZ-GE09NAH/NAH2** **MUY-GE09NA/NA2**	1 lb. 12 oz.	0	1.62	4.86	8.10	11.34	12.96
MUZ-GE12NA/NA2 **MUZ-GE12NAH/NAH2** **MUY-GE12NA/NA2**	2 lb. 9 oz.						
MUZ-GE15NA/NA2 **MUZ-GE15NAH/NAH2** **MUY-GE15NA/NA2**							

Calculation: X oz. = 1.62/5 oz. / ft. × (Refrigerant piping length (ft.) - 25)

Model	Outdoor unit precharged	Refrigerant piping length (one way): ft.								
		25	30	40	50	60	70	80	90	100
MUZ-GE18NA **MUZ-GE18NAH** **MUY-GE18NA**	3 lb. 7 oz.	0	1.08	3.24	5.40	7.56	9.72	11.88	14.04	16.20

Calculation: X oz. = 1.08/5 oz. / ft. × (Refrigerant piping length (ft.) - 25)

NOTE: Refrigerant piping exceeding 33 ft. requires additional refrigerant charge according to the calculation.

Model	Outdoor unit precharged	Refrigerant piping length (one way): ft.							
		33	40	50	60	70	80	90	100
MUZ-GE24NA **MUY-GE24NA**	4 lb. 3 oz.	0	4.14	10.06	15.98	21.90	27.82	33.74	39.66

Calculation: X oz. = 2.96/5 oz. / ft. × (Refrigerant piping length (ft.) - 33)

7 DATA

7-1. PERFORMANCE DATA

1) COOLING CAPACITY

MUZ-GE09NA **MUZ-GE12NA** **MUZ-GE15NA** **MUZ-GE18NA** **MUZ-GE24NA**
MUZ-GE09NA2 **MUZ-GE12NA2** **MUZ-GE15NA2**
MUZ-GE09NAH **MUZ-GE12NAH** **MUZ-GE15NAH** **MUZ-GE18NAH**
MUZ-GE09NAH2 **MUZ-GE12NAH2** **MUZ-GE15NAH2**
MUY-GE09NA **MUY-GE12NA** **MUY-GE15NA** **MUY-GE18NA** **MUY-GE24NA**
MUY-GE09NA2 **MUY-GE12NA2** **MUY-GE15NA2**

Model	Indoor air IWB (˚F)	Outdoor intake air DB temperature (˚F)														
		75			85			95			105			115		
		TC	SHC	TPC	TC	SHC	TPC	TC	SHC	TPC	TC	SHC	TPC	TC	SHC	TPC
MUZ-GE09NA/NA2 MUZ-GE09NAH/NAH2 MUY-GE09NA/NA2	71	11.0	7.6	0.59	10.3	7.1	0.64	9.7	6.6	0.69	9.0	6.2	0.73	8.3	5.7	0.76
	67	10.4	8.6	0.55	9.7	8.0	0.61	9.0	7.4	0.66	8.4	6.9	0.70	7.7	6.3	0.73
	63	9.8	9.4	0.53	9.1	8.7	0.58	8.5	8.1	0.63	7.7	7.3	0.67	7.0	6.7	0.70
MUZ-GE12NA/NA2 MUZ-GE12NAH/NAH2 MUY-GE12NA/NA2	71	14.7	8.9	0.85	13.7	8.3	0.94	12.9	7.8	1.01	12.0	7.3	1.06	11.0	6.7	1.10
	67	13.9	10.3	0.81	13.0	9.6	0.89	12.0	8.9	0.96	11.2	8.3	1.02	10.3	7.6	1.07
	63	13.1	11.4	0.77	12.1	10.6	0.85	11.3	9.9	0.92	10.3	9.0	0.98	9.4	8.2	1.02
MUZ-GE15NA/NA2 MUZ-GE15NAH/NAH2 MUY-GE15NA/NA2	71	17.2	11.4	0.96	16.0	10.7	1.05	15.1	10.0	1.13	14.0	9.3	1.19	12.9	8.6	1.24
	67	16.2	13.0	0.91	15.1	12.1	1.00	14.0	11.2	1.08	13.0	10.4	1.14	12.0	9.6	1.20
	63	15.3	14.2	0.86	14.1	13.2	0.96	13.2	12.3	1.03	12.0	11.2	1.10	10.9	10.2	1.14
MUZ-GE18NA MUZ-GE18NAH MUY-GE18NA	71	21.1	12.2	1.46	19.7	11.4	1.60	18.5	10.7	1.72	17.2	9.9	1.81	15.8	9.1	1.89
	67	20.0	14.2	1.38	18.6	13.2	1.52	17.2	12.2	1.64	16.0	11.4	1.74	14.7	10.4	1.82
	63	18.7	15.8	1.31	17.4	14.7	1.45	16.2	13.6	1.57	14.7	12.4	1.67	13.4	11.3	1.74
MUZ-GE24NA MUY-GE24NA	71	27.6	17.0	1.60	25.8	15.9	1.76	24.2	14.9	1.89	22.5	13.9	1.99	20.7	12.8	2.07
	67	26.1	19.6	1.51	24.3	18.2	1.67	22.5	16.9	1.80	20.9	15.7	1.91	19.2	14.4	2.00
	63	24.5	21.7	1.44	22.7	20.1	1.59	21.2	18.7	1.72	19.2	17.0	1.84	17.6	15.5	1.91

NOTE: 1. IWB: Intake air wet-bulb temperature
TC: Total Capacity ($\times 10^3$ Btu/h)
SHC: Sensible Heat Capacity ($\times 10^3$ Btu/h)
TPC: Total Power Consumption (kW)
2. SHC is based on 80˚F of indoor Intake air DB temperature.

2) COOLING CAPACITY CORRECTIONS

	Refrigerant piping length (one way: ft.)			
	25 (std.)	40	65	100
MUZ-GE09NA/NA2 MUZ-GE09NAH/NAH2 MUY-GE09NA/NA2 MUZ-GE12NA/NA2 MUZ-GE12NAH/NAH2 MUY-GE12NA/NA2 MUZ-GE15NA/NA2 MUZ-GE15NAH/NAH2 MUY-GE15NA/NA2 MUZ-GE18NA MUZ-GE18NAH MUY-GE18NA	1.0	0.954	0.878	—
MUZ-GE24NA MUY-GE24NA	1.0	0.954	0.878	0.771

3) HEATING CAPACITY (MUZ)

Model	Indoor air IDB (˚F)	Outdoor intake air WB temperature (˚F)													
		5		15		25		35		43		45		55	
		TC	TPC	TC	TPC	TC	TPC	TC	TPC	TC	TPC	TC	TPC	TC	TPC
MUZ-GE09NA MUZ-GE09NA2	75	4.8	0.45	6.3	0.57	7.9	0.67	9.4	0.74	10.6	0.78	11.0	0.79	12.4	0.82
	70	5.2	0.43	6.7	0.55	8.2	0.65	9.6	0.72	10.9	0.76	11.2	0.78	12.7	0.81
	65	5.5	0.41	6.9	0.52	8.6	0.63	10.0	0.70	11.2	0.74	11.6	0.75	13.0	0.79
MUZ-GE09NAH MUZ-GE09NAH2	75	4.8	0.58	6.3	0.70	7.9	0.80	9.4	0.74	10.6	0.78	11.0	0.79	12.4	0.82
	70	5.2	0.56	6.7	0.68	8.2	0.78	9.6	0.72	10.9	0.76	11.2	0.78	12.7	0.81
	65	5.5	0.54	6.9	0.65	8.6	0.76	10.0	0.70	11.2	0.74	11.6	0.75	13.0	0.79
MUZ-GE12NA MUZ-GE12NA2	75	6.3	0.69	8.4	0.87	10.4	1.02	12.5	1.14	14.0	1.20	14.5	1.22	16.4	1.26
	70	6.8	0.66	8.9	0.84	10.8	1.00	12.7	1.11	14.4	1.17	14.8	1.19	16.8	1.24
	65	7.2	0.63	9.1	0.81	11.3	0.97	13.2	1.08	14.8	1.14	15.3	1.16	17.1	1.22
MUZ-GE12NAH MUZ-GE12NAH2	75	6.3	0.82	8.4	1.00	10.4	1.15	12.5	1.14	14.0	1.20	14.5	1.22	16.4	1.26
	70	6.8	0.79	8.9	0.97	10.8	1.13	12.7	1.11	14.4	1.17	14.8	1.19	16.8	1.24
	65	7.2	0.76	9.1	0.94	11.3	1.10	13.2	1.08	14.8	1.14	15.3	1.16	17.1	1.22
MUZ-GE15NA MUZ-GE15NA2	75	7.9	0.63	10.4	0.79	13.1	0.93	1.56	1.03	17.6	1.09	18.1	1.10	20.5	1.14
	70	8.6	0.60	11.1	0.76	13.5	0.91	15.9	1.01	18.0	1.06	18.5	1.08	21.0	1.12
	65	9.0	0.57	11.3	0.73	14.1	0.87	16.5	0.98	18.5	1.03	19.1	1.05	21.4	1.10
MUZ-GE15NAH MUZ-GE15NAH2	75	7.9	0.76	10.4	0.92	13.1	1.06	15.6	1.03	17.6	1.09	18.1	1.10	20.5	1.14
	70	8.6	0.73	11.1	0.89	13.5	1.04	15.9	1.01	18.0	1.06	18.5	1.08	21.0	1.12
	65	9.0	0.70	11.3	0.86	14.1	1.00	16.5	0.98	18.5	1.03	19.1	1.05	21.4	1.10
MUZ-GE18NA	75	9.1	0.64	11.9	0.81	14.9	0.95	17.8	1.06	20.1	1.12	20.7	1.13	23.5	1.18
	70	9.8	0.62	12.7	0.78	15.5	0.93	18.2	1.04	20.6	1.09	21.2	1.11	24.0	1.16
	65	10.3	0.59	13.0	0.75	16.2	0.90	18.8	1.01	21.2	1.06	21.8	1.08	24.5	1.13
MUZ-GE18NAH	75	9.1	0.77	11.9	0.94	14.9	1.08	17.8	1.06	20.1	1.12	20.7	1.13	23.5	1.18
	70	9.8	0.75	12.7	0.91	15.5	1.06	18.2	1.04	20.6	1.09	21.2	1.11	24.0	1.16
	65	10.3	0.72	13.0	0.88	16.2	1.03	18.8	1.01	21.2	1.06	21.8	1.08	24.5	1.13
MUZ-GE24NA	75	12.1	1.38	16.0	1.74	20.0	2.05	23.9	2.28	26.9	2.40	27.7	2.43	31.5	2.53
	70	13.1	1.32	17.0	1.68	20.7	2.00	24.4	2.22	27.6	2.34	28.4	2.39	32.2	2.48
	65	13.8	1.26	17.4	1.61	21.7	1.93	25.3	2.16	28.4	2.28	29.3	2.32	32.8	2.43

NOTE: 1. IDB: Intake air dry-bulb temperature
TC: Total Capacity (x10^3Btu/h)
TPC: Total Power Consumption (kW)
2. Above data is for heating operation without any frost.

How to operate with fixed operational frequency of the compressor.

1. Press the EMERGENCY OPERATION switch on the front of the indoor unit, and select either EMERGENCY COOL mode or EMERGENCY HEAT mode before starting to operate the air conditioner.
2. The compressor starts with operational frequency.
3. The fan speed of the indoor unit is High.
4. This operation continues for 30 minutes.
5. In order to release this operation, press the EMERGENCY OPERATION switch twice or once, or press any button on the remote controller.

7-2. PERFORMANCE CURVE
Cooling

Cooling capacity (at Rated frequency)

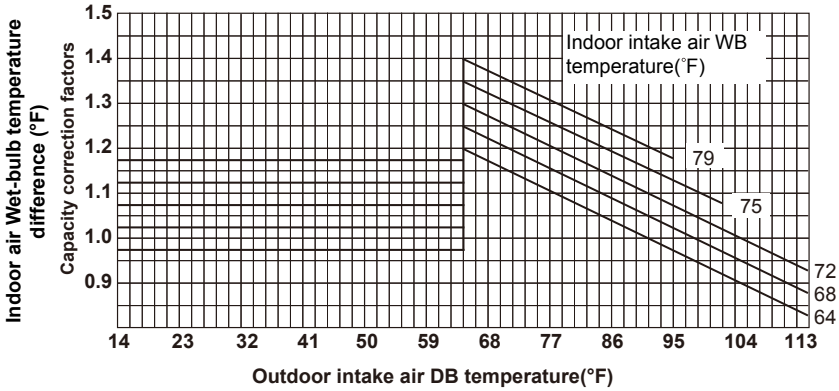

MUZ-GE09NA MUZ-GE09NA2
MUZ-GE09NAH MUZ-GE09NAH2
MUY-GE09NA MUY-GE09NA2

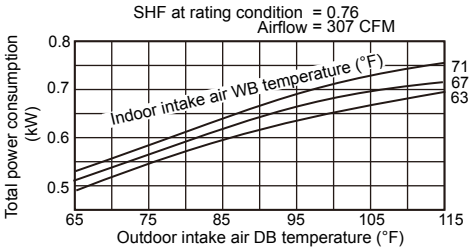

MUZ-GE12NA MUZ-GE12NA2
MUZ-GE12NAH MUZ-GE12NAH2
MUY-GE12NA MUY-GE12NA2

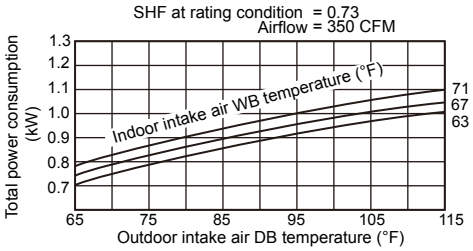

MUZ-GE15NA MUZ-GE15NA2
MUZ-GE15NAH MUZ-GE15NAH2
MUY-GE15NA MUY-GE15NA2

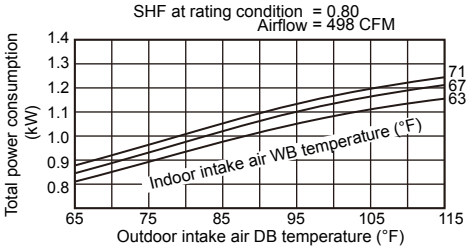

MUZ-GE18NA
MUZ-GE18NAH
MUY-GE18NA

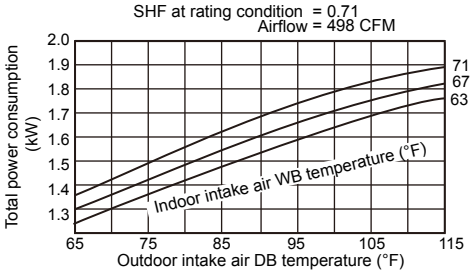

MUZ-GE24NA
MUY-GE24NA

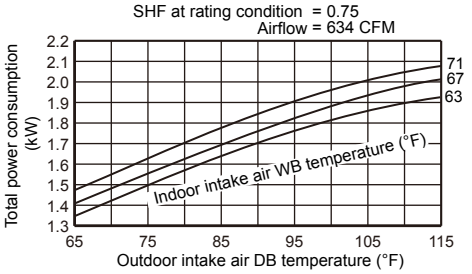

Heating (MUZ)

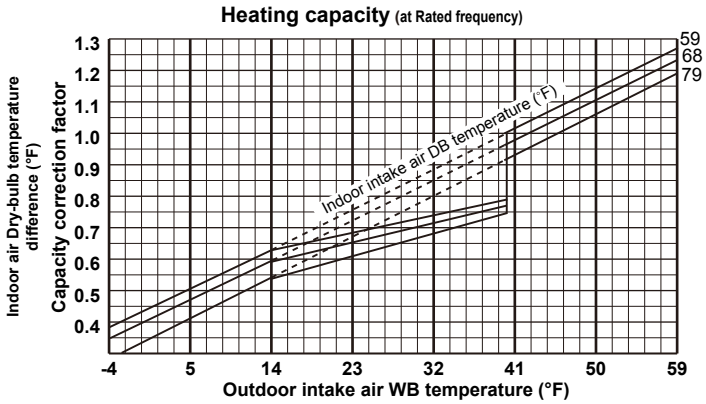

MUZ-GE09NA MUZ-GE09NA2

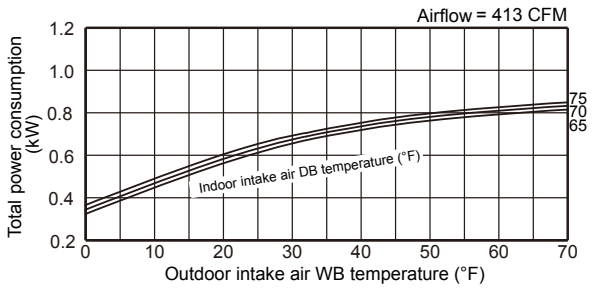

MUZ-GE09NAH MUZ-GE09NAH2

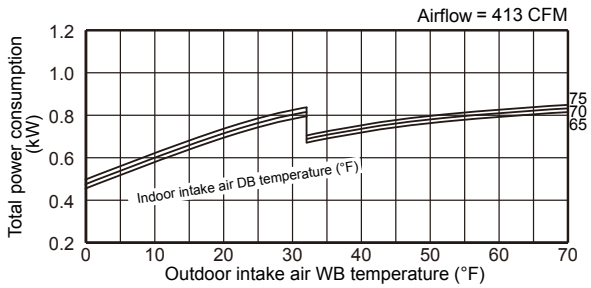

MUZ-GE12NA MUZ-GE12NA2

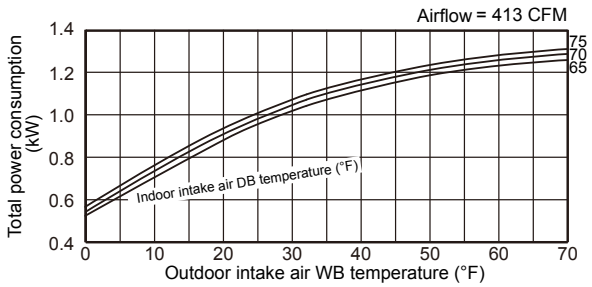

MUZ-GE12NAH MUZ-GE12NAH2

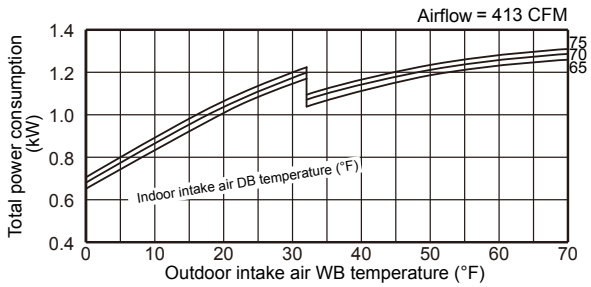

MUZ-GE15NA MUZ-GE15NA2

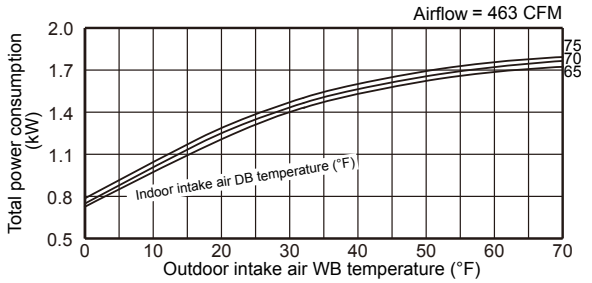

MUZ-GE15NAH MUZ-GE15NAH2

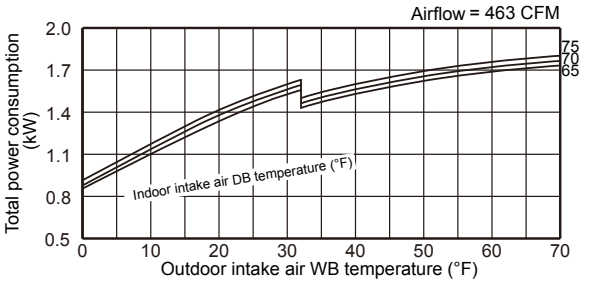

This value of frequency is not the same as the actual frequency in operating. Refer to 7-5 and 7-6 for the relationships between frequency and capacity.

MUZ-GE18NA

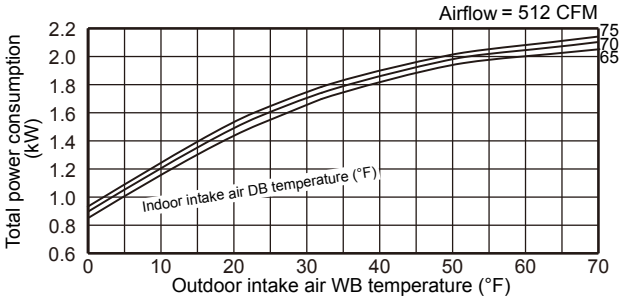

MUZ-GE18NAH

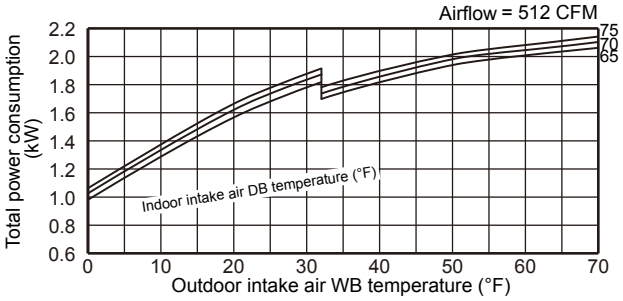

MUZ-GE24NA

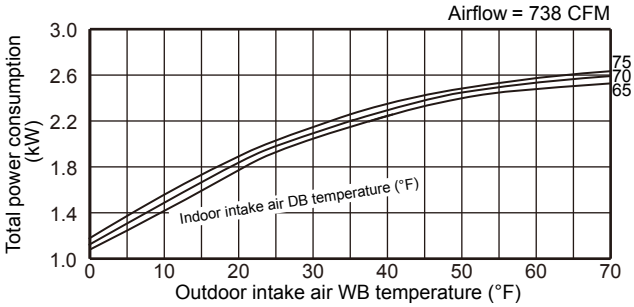

This value of frequency is not the same as the actual frequency in operating. Refer to 7-5 and 7-6 for the relationships between frequency and capacity.

7-3. CONDENSING PRESSURE

Cooling

Data is based on the condition of indoor humidity 50 %.
Air flow should be set to High speed.

MUZ-GE09NA MUZ-GE09NA2
MUZ-GE09NAH MUZ-GE09NAH2
MUY-GE09NA MUY-GE09NA2

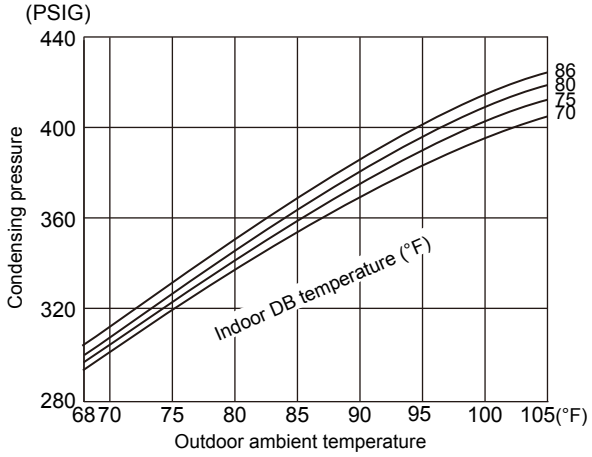

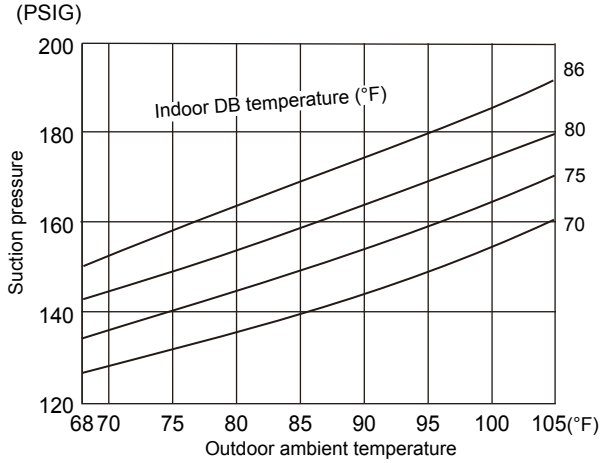

MUZ-GE12NA MUZ-GE12NA2
MUZ-GE12NAH MUZ-GE12NAH2
MUY-GE12NA MUY-GE12NA2

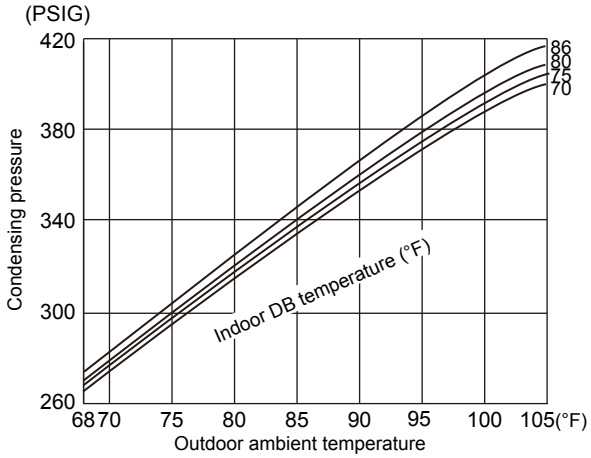

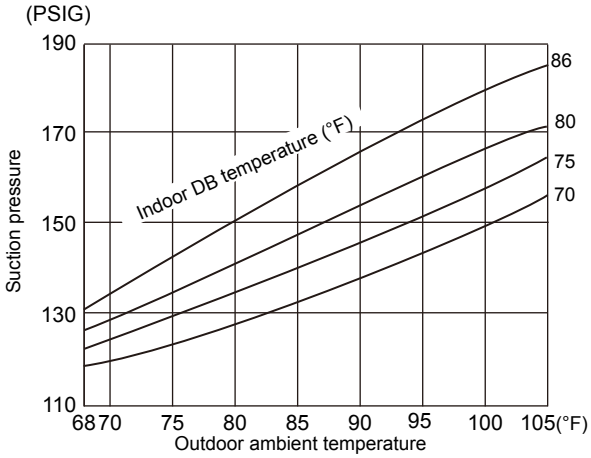

MUZ-GE15NA MUZ-GE15NA2
MUZ-GE15NAH MUZ-GE15NAH2
MUY-GE15NA MUY-GE15NA2

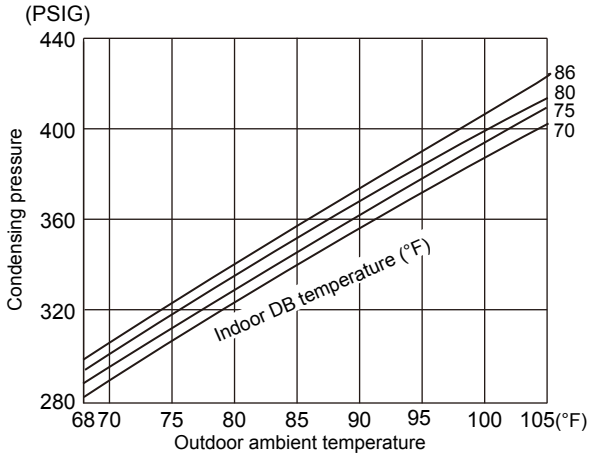

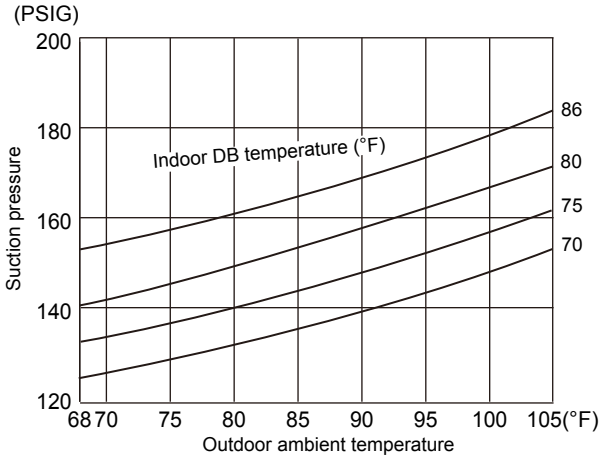

MUZ-GE18NA
MUZ-GE18NAH
MUY-GE18NA

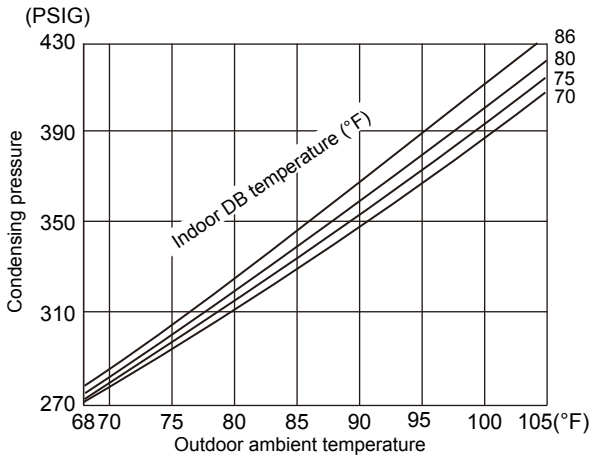

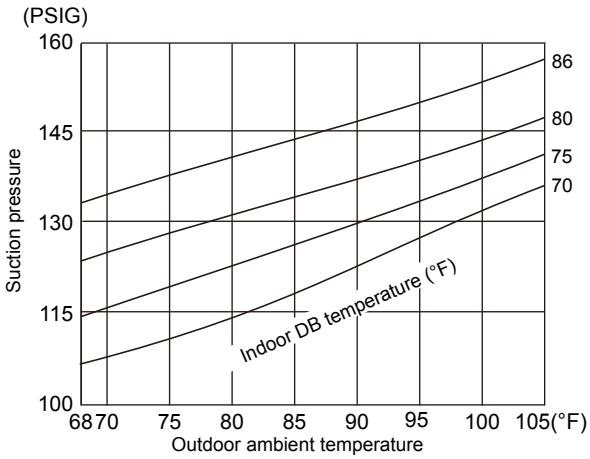

MUZ-GE24NA
MUY-GE24NA

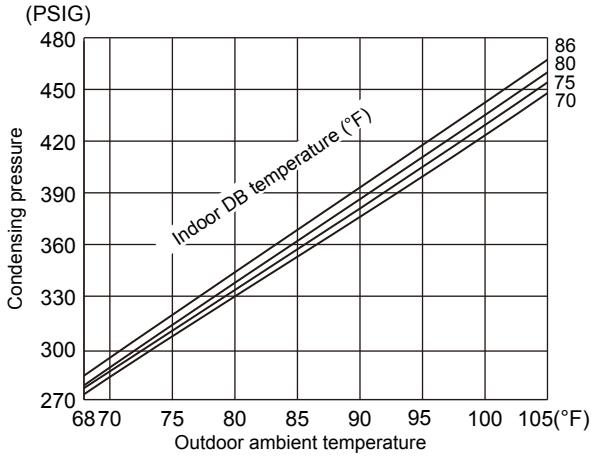

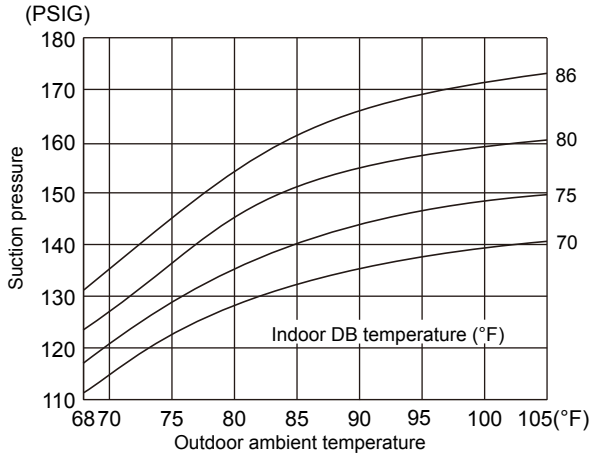

Heating (MUZ)
Data is based on the condition of outdoor humidity 75%.
Air flow should be set to High speed.
Data is for heating operation without any frost.

MUZ-GE09NA MUZ-GE09NA2
MUZ-GE09NAH MUZ-GE09NAH2

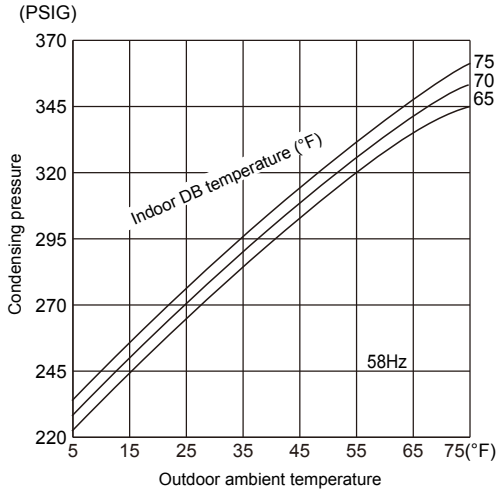

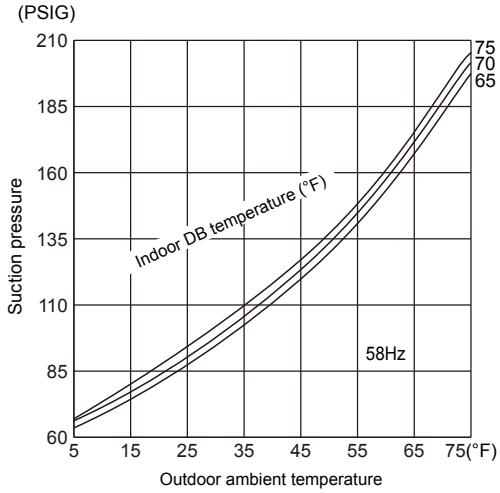

MUZ-GE12NA MUZ-GE12NA2
MUZ-GE12NAH MUZ-GE12NAH2

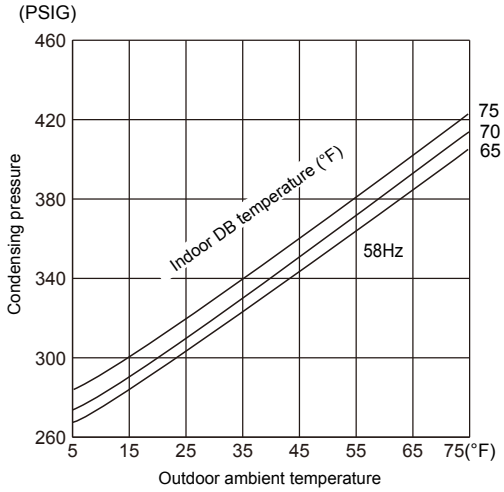

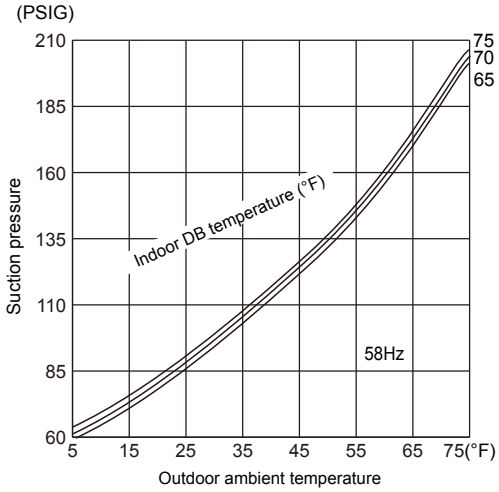

MUZ-GE15NA MUZ-GE15NA2
MUZ-GE15NAH MUZ-GE15NAH2

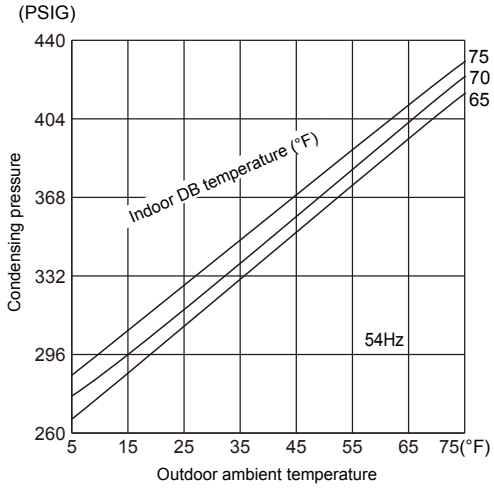

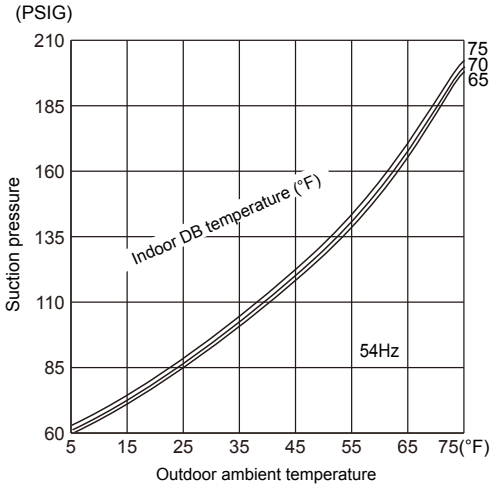

MUZ-GE18NA
MUZ-GE18NAH

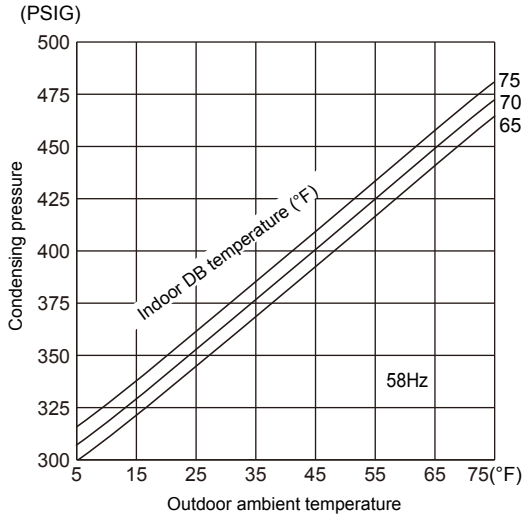

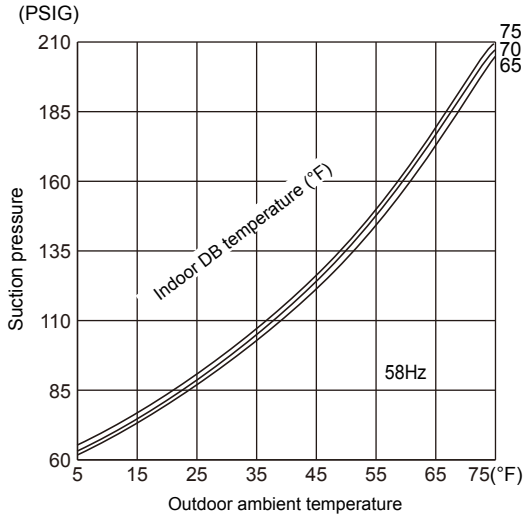

MUZ-GE24NA

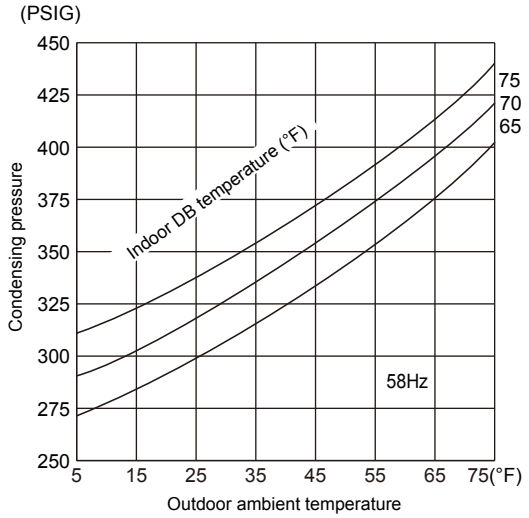

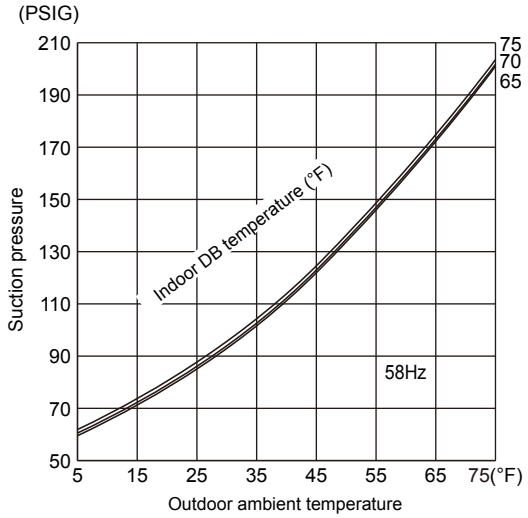

7-4. STANDARD OPERATION DATA

Model				MSZ-GE09NA MSY-GE09NA	MSZ-GE09NA	MSZ-GE12NA MSY-GE12NA	MSZ-GE12NA
Item			Unit	Cooling	Heating	Cooling	Heating
Total	Capacity		Btu/h	9,000	10,900	12,000	14,400
	SHF		-	0.82	—	0.74	—
	Input		kW	0.660	0.760	0.960	1.170
	Rated frequency		Hz	59.5	77.5	69.0	77.0
Electrical circuit	Indoor unit			**MSZ-GE09NA, MSY-GE09NA**		**MSZ-GE12NA, MSY-GE12NA**	
	Power supply (V, Phase, Hz)			208/230, 1, 60			
	Input		kW	0.022	0.023	0.022	0.023
	Fan motor current		A	0.24/0.22	0.25/0.23	0.24/0.22	0.25/0.23
	Outdoor unit			**MUZ-GE09NA MUZ-GE09NA2 MUZ-GE09NAH MUZ-GE09NAH2 MUY-GE09NA MUY-GE09NA2**	**MUZ-GE09NA MUZ-GE09NA2 MUZ-GE09NAH MUZ-GE09NAH2**	**MUZ-GE12NA MUZ-GE12NA2 MUZ-GE12NAH MUZ-GE12NAH2 MUY-GE12NA MUY-GE12NA2**	**MUZ-GE12NA MUZ-GE12NA2 MUZ-GE12NAH MUZ-GE12NAH2**
	Power supply (V, phase, Hz)			208/230, 1, 60			
	Input		kW	0.638	0.737	0.938	1.147
	Comp. current		A	3.32/3.00	3.66/3.31	4.39/3.97	5.41/4.89
	Fan motor current		A	0.27/0.24	0.30/0.27	0.34/0.31	0.31/0.28
Refrigerant circuit	Condensing pressure		PSIG	389	331	389	397
	Suction pressure		PSIG	151	103	133	104
	Discharge temperature		°F	154	152	163	162
	Condensing temperature		°F	115	103	115	116
	Suction temperature		°F	59	39	56	35
	Comp. shell bottom temp		°F	151	149	158	158
	Ref. pipe length		ft.	25			
	Refrigerant charge (R410A)		-	1 lb. 12 oz.		2 lb. 9 oz.	
Indoor unit	Intake air temperature	DB	°F	80	70	80	70
		WB	°F	67	60	67	60
	Discharge air temperature	DB	°F	60	97	56	108
		WB	°F	58	—	55	—
	Fan speed (High)		rpm	1,020	1,040	1,020	1,040
	Airflow (High)		CFM	367 (Wet)	413	367 (Wet)	413
Outdoor unit	Intake air temperature	DB	°F	95	47	95	47
		WB	°F	—	43	—	43
	Fan speed		rpm	800	850	900	860
	Airflow		CFM	1151	1225	1229	1172

Model				MSZ-GE15NA MSY-GE15NA	MSZ-GE15NA	MSZ-GE18NA MSY-GE18NA	MSZ-GE18NA
Item			Unit	Cooling	Heating	Cooling	Heating
Total	Capacity		Btu/h	14,000	18,000	17,200	21,600
	SHF		-	0.80	—	0.71	—
	Input		kW	1.080	1.600	1.640	1.900
	Rated frequency		Hz	55.5	74.0	83.0	84.0
Electrical circuit	Indoor unit			**MSZ-GE15NA, MSY-GE15NA**		**MSZ-GE18NA, MSY-GE18NA**	
	Power supply (V, Phase, Hz)			208/230, 1, 60			
	Input		kW	0.045	0.031	0.043	0.037
	Fan motor current		A	0.50/0.45	0.35/0.32	0.43/0.39	0.40/0.36
	Outdoor unit			**MUZ-GE15NA, - 1 MUZ-GE15NA2 MUZ-GE15NAH MUZ-GE15NAH2 MUY-GE15NA, - 1 MUY-GE15NA2**	**MUZ-GE15NA, - 1 MUZ-GE15NA2 MUZ-GE15NAH MUZ-GE15NAH2**	**MUZ-GE18NA, - 1 MUZ-GE18NAH MUY-GE18NA, - 1**	**MUZ-GE18NA, - 1 MUZ-GE18NAH**
	Power supply (V, phase, Hz)			208/230, 1, 60			
	Input		kW	1,035	1,569	1,595	1,860
	Comp. current		A	4.86/4.40	7.38/6.67	6.97/6.29	8.36/7.55
	Fan motor current		A	0.33/0.30	0.34/0.31	0.80/0.72	0.64/0.59
Refrigerant circuit	Condensing pressure		PSIG	400	431	376	458
	Suction pressure		PSIG	139	99	117	102
	Discharge temperature		°F	164	179	177	184
	Condensing temperature		°F	117	122	112	127
	Suction temperature		°F	57	31	59	33
	Comp. shell bottom temp		°F	148	165	164	170
	Ref. pipe length		ft.	25			
	Refrigerant charge (R410A)		-	2 lb. 9 oz.		3 lb. 7 oz.	
Indoor unit	Intake air temperature	DB	°F	80	70	80	70
		WB	°F	67	60	67	60
	Discharge air temperature	DB	°F	60	114	56	117
		WB	°F	57	—	54	—
	Fan speed (High)		rpm	1,280	1,140	1,280	1,240
	Airflow (High)		CFM	498 (Wet)	463	498 (Wet)	512
Outdoor unit	Intake air temperature	DB	°F	95	47	95	47
		WB	°F	—	43	—	43
	Fan speed		rpm	910	900	780	740
	Airflow		CFM	1,243	1,229	1,730	1,659

Model				MSZ-GE24NA MSY-GE24NA	MSZ-GE24NA
Item			Unit	Cooling	Heating
Total	Capacity		Btu/h	22,500	27,600
	SHF		-	0.75	—
	Input		kW	1.800	2.340
	Rated frequency		Hz	66.5	82.0
Electrical circuit	Indoor unit			**MSZ-GE24NA, MSY-GE24NA**	
	Power supply (V, Phase, Hz)			208/230, 1, 60	
	Input		kW	0.058	
	Fan motor current		A	0.56/0.51	
	Outdoor unit			**MUZ-GE24NA MUY-GE24NA**	**MUZ-GE24NA**
	Power supply (V, phase, Hz)			208/230, 1, 60	
	Input		kW	1.742	2.282
	Comp. current		A	7.01/6.34	9.59/8.67
	Fan motor current		A	1.61/1.05	1.13/1.02
Refrigerant circuit	Condensing pressure		PSIG	395	405
	Suction pressure		PSIG	141	102
	Discharge temperature		°F	158	171
	Condensing temperature		°F	115	
	Suction temperature		°F	52	33
	Comp. shell bottom temp		°F	140	148
	Ref. pipe length		ft.	25	
	Refrigerant charge (R410A)		-	4 lb. 3 oz.	
Indoor unit	Intake air temperature	DB	°F	80	70
		WB	°F	67	60
	Discharge air temperature	DB	°F	56	111
		WB	°F	53	—
	Fan speed (High)		rpm	1,300	
	Airflow (High)		CFM	634 (Wet)	738
Outdoor unit	Intake air temperature	DB	°F	95	47
		WB	°F	—	43
	Fan speed		rpm	840	810
	Airflow		CFM	1,769	1,701

7-5. CAPACITY AND INPUT CORRECTION BY INVERTER OUTPUT FREQUENCY

MUZ-GE09NA MUZ-GE09NA2
MUZ-GE09NAH MUZ-GE09NAH2
MUY-GE09NA MUY-GE09NA2

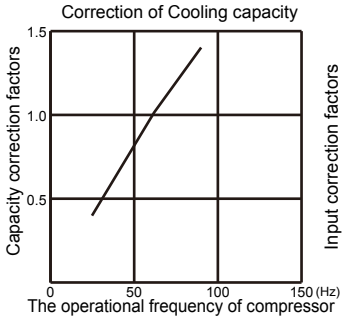

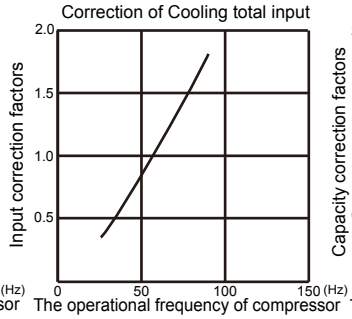

MUZ-GE09NA MUZ-GE09NA2
MUZ-GE09NAH MUZ-GE09NAH2

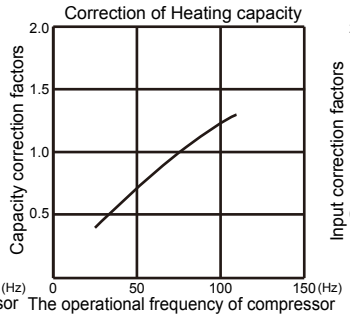

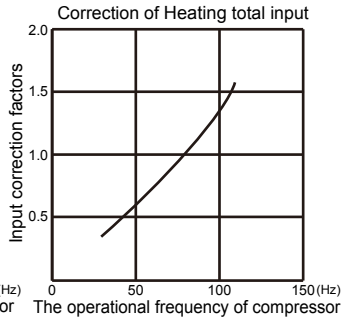

MUZ-GE12NA MUZ-GE12NA2
MUZ-GE12NAH MUZ-GE12NAH2
MUY-GE12NA MUY-GE12NA2

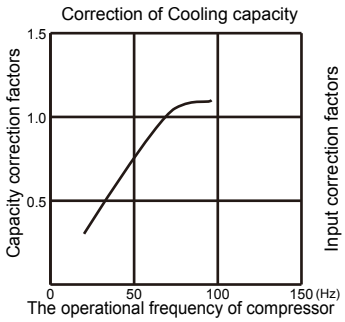

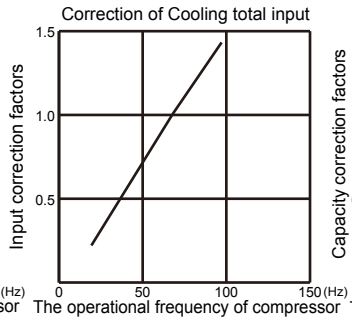

MUZ-GE12NA MUZ-GE12NA2
MUZ-GE12NAH MUZ-GE12NAH2

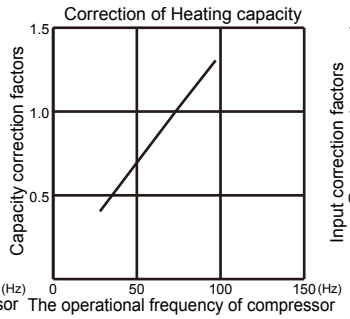

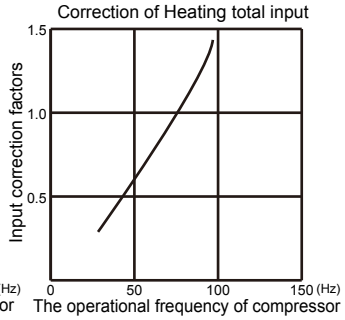

MUZ-GE15NA MUZ-GE15NA2
MUZ-GE15NAH MUZ-GE15NAH2
MUY-GE15NA MUY-GE15NA2

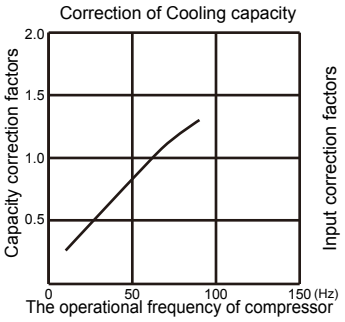

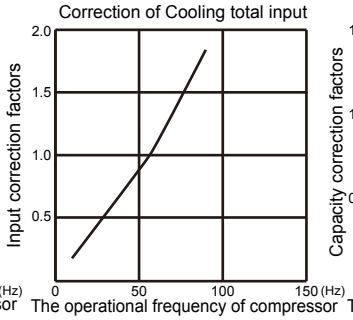

MUZ-GE15NA MUZ-GE15NA2
MUZ-GE15NAH MUZ-GE15NAH2

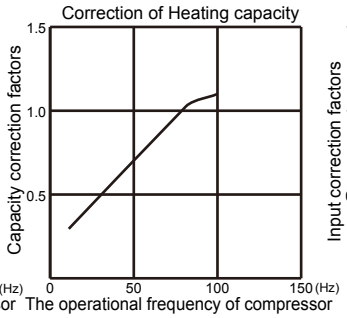

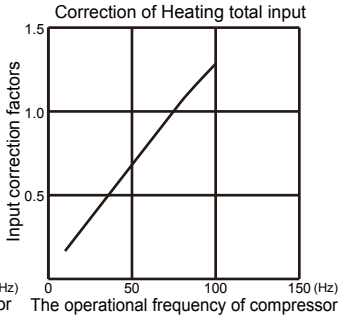

MUZ-GE18NA
MUZ-GE18NAH
MUY-GE18NA

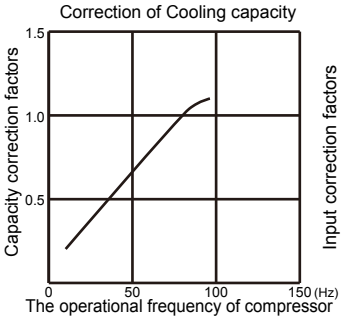

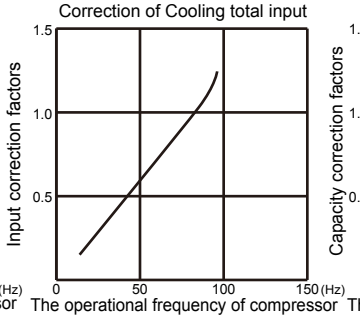

MUZ-GE18NA
MUZ-GE18NAH

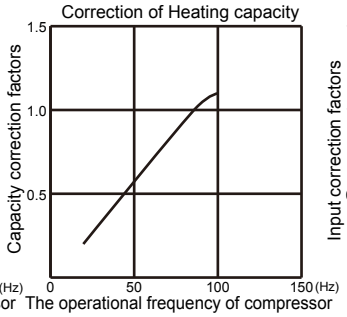

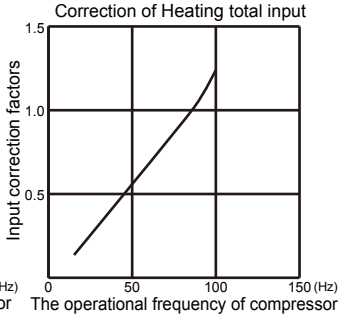

MUZ-GE24NA
MUY-GE24NA

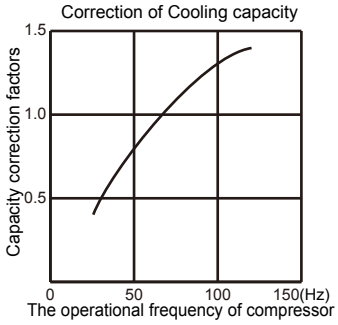

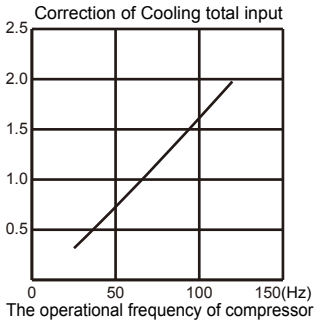

MUZ-GE24NA

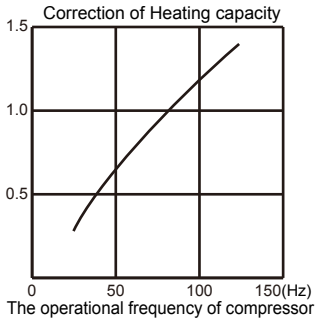

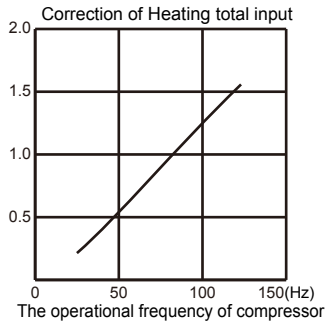

7-6. HOW TO OPERATE FIXED-FREQUENCY OPERATION (Test run operation)

1. Press EMERGENCY OPERATION switch to start COOL or HEAT mode (COOL: Press once, HEAT: Press twice).
2. Test run operation starts and continues to operate for 30 minutes.
3. Compressor operates at rated frequency in COOL mode or 58 Hz in HEAT mode.
4. Indoor fan operates at High speed.
5. After 30 minutes, test run operation finishes and EMERGENCY OPERATION starts (operation frequency of compressor varies).
6. To cancel test run operation (EMERGENCY OPERATION), press EMERGENCY OPERATION switch or any button on remote controller.

8 ACTUATOR CONTROL

MUZ-GE09NA MUZ-GE12NA MUZ-GE15NA MUZ-GE18NA MUZ-GE24NA
MUZ-GE09NA2 MUZ-GE12NA2 MUZ-GE15NA2
MUZ-GE09NAH MUZ-GE12NAH MUZ-GE15NAH MUZ-GE18NAH
MUZ-GE09NAH2 MUZ-GE12NAH2 MUZ-GE15NAH2
MUY-GE09NA MUY-GE12NA MUY-GE15NA MUY-GE18NA MUY-GE24NA
MUY-GE09NA2 MUY-GE12NA2 MUY-GE15NA2

8-1. OUTDOOR FAN MOTOR CONTROL

The fan motor turns ON/OFF, interlocking with the compressor.
[ON] The fan motor turns ON 5 seconds before the compressor starts up.
[OFF] The fan motor turns OFF 15 seconds after the compressor has stopped running.

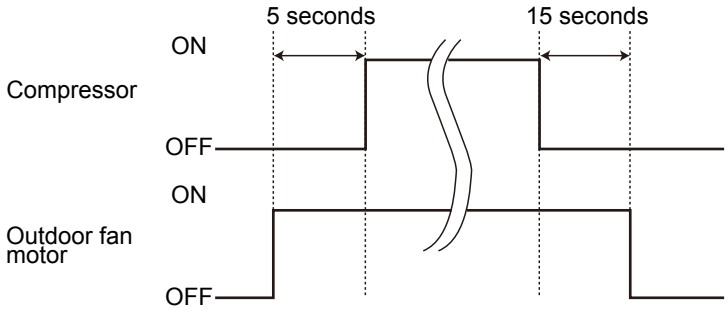

8-2. R.V. COIL CONTROL (MUZ)

Heating · · · · · · · · · · · · · · · · · · ON
Cooling · · · · · · · · · · · · · · · · · · OFF
Dry · OFF
NOTE: The 4-way valve reverses for 5 seconds right before start-up of the compressor.

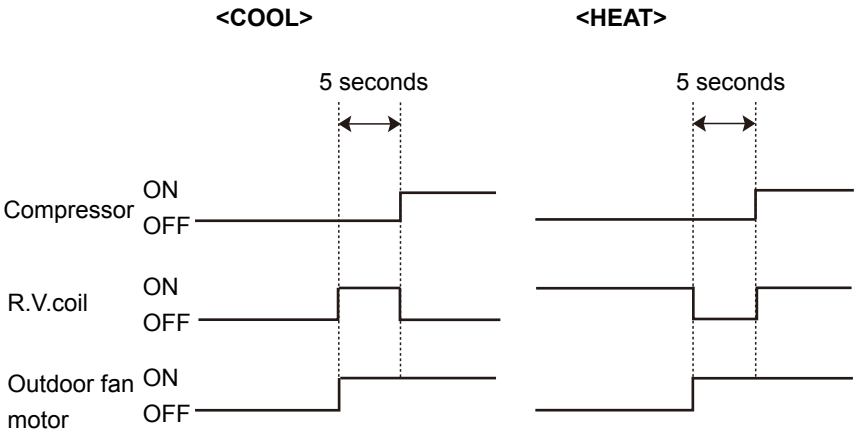

8-3. RELATION BETWEEN MAIN SENSOR AND ACTUATOR

Sensor	Purpose	Actuator				
		Compressor	LEV	Outdoor fan motor	R.V.coil **(MUZ)**	Indoor fan motor
Discharge temperature thermistor	Protection	○	○			
Indoor coil temperature thermistor	Cooling: Coil frost prevention	○				
	Heating: High pressure protection	○	○			
Defrost thermistor **(MUZ)**	Heating: Defrosting	○	○	○	○	○
Fin temperature thermistor	Protection	○		○		
Ambient temperature thermistor	Cooling: Low ambient temperature operation	○	○	○		
Outdoor heat exchanger temperature thermistor	Cooling: Low ambient temperature operation	○	○	○		
	Cooling: High pressure protection	○	○	○		

9 SERVICE FUNCTIONS

MUZ-GE09NA MUZ-GE12NA MUZ-GE15NA MUZ-GE18NA MUZ-GE24NA
MUZ-GE09NA2 MUZ-GE12NA2 MUZ-GE15NA2
MUZ-GE09NAH MUZ-GE12NAH MUZ-GE15NAH MUZ-GE18NAH
MUZ-GE09NAH2 MUZ-GE12NAH2 MUZ-GE15NAH2
MUY-GE09NA MUY-GE12NA MUY-GE15NA MUY-GE18NA MUY-GE24NA
MUY-GE09NA2 MUY-GE12NA2 MUY-GE15NA2

9-1. CHANGE IN DEFROST SETTING (MUZ)

Changing defrost finish temperature

<JS> To change the defrost finish temperature, cut/solder the JS wire of the outdoor inverter P.C. board. (Refer to 10-6.1.)

Jumper		Defrost finish temperature				
		MUZ-GE09	MUZ-GE12	MUZ-GE15	MUZ-GE18	MUZ-GE18/24
JS	Soldered (Initial setting)	41°F (5°C)	50°F (10°C)	41°F (5°C)	48°F (9°C)	50°F (10°C)
	None (Cut)	46°F (8°C)	55°F (13°C)	50°F (10°C)	64°F (18°C)	64°F (18°C)

9-2. PRE-HEAT CONTROL SETTING

PRE-HEAT CONTROL

When moisture gets into the refrigerant cycle, it may interfere the start-up of the compressor at low outside temperature. The pre-heat control prevents this interference. The pre-heat control turns ON when the discharge temperature thermistor is 68°F (20°C) or below. When pre-heat control turns ON, compressor is energized. (About 50 W)

Pre-heat control setting

<JK> ON: To activate the pre-heat control, cut the JK wire of the inverter P.C. board. (Refer to 10-6.1.)
OFF: To deactivate the pre-heat control, solder JK wire of the inverter P.C. board. (Refer to 10-6.1.)

NOTE: When the inverter P.C. board is replaced, check the Jumper wires, and cut/solder them if necessary.

10 TROUBLESHOOTING

MUZ-GE09NA	**MUZ-GE12NA**	**MUZ-GE15NA**	**MUZ-GE18NA**	**MUZ-GE24NA**
MUZ-GE09NA2	**MUZ-GE12NA2**	**MUZ-GE15NA2**		
MUZ-GE09NAH	**MUZ-GE12NAH**	**MUZ-GE15NAH**	**MUZ-GE18NAH**	
MUZ-GE09NAH2	**MUZ-GE12NAH2**	**MUZ-GE15NAH2**		
MUY-GE09NA	**MUY-GE12NA**	**MUY-GE15NA**	**MUY-GE18NA**	**MUY-GE24NA**
MUY-GE09NA2	**MUY-GE12NA2**	**MUY-GE15NA2**		

10-1. CAUTIONS ON TROUBLESHOOTING

1. Before troubleshooting, check the following

1) Check the power supply voltage.
2) Check the indoor/outdoor connecting wire for miswiring.

2. Take care of the following during servicing

1) Before servicing the air conditioner, be sure to turn OFF the main unit first with the remote controller, then after confirming the horizontal vane is closed, turn off the breaker and/or disconnect the power plug.
2) Be sure to turn OFF the power supply before removing the front panel, the cabinet, the top panel, and the electronic control P.C. board.
3) When removing the electrical parts, be careful of the residual voltage of smoothing capacitor.
4) When removing the electronic control P.C. board, hold the edge of the board with care NOT to apply stress on the components.
5) When connecting or disconnecting the connectors, hold the connector housing. DO NOT pull the lead wires.

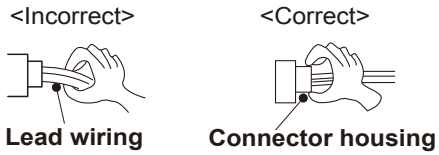

3. Troubleshooting procedure

1) Check if the OPERATION INDICATOR lamp on the indoor unit is blinking ON and OFF to indicate an abnormality. To make sure, check how many times the OPERATION INDICATOR lamp is blinking ON and OFF before starting service work.
2) Before servicing, verify that all connectors and terminals are connected properly.
3) When the electronic control P.C. board seems to be defective, check for disconnection of the copper foil pattern and burnt or discolored components.
4) Refer to 10-2. and 10-3.

10-2. FAILURE MODE RECALL FUNCTION

Outline of the function

This air conditioner can memorize the abnormal condition which has occurred once.
Even though LED indication listed on the troubleshooting check table (10-3.) disappears, the memorized failure details can be recalled.

1. Flow chart of failure mode recall function for the indoor/outdoor unit

MSZ-GE06/09/12/15/18NA
MSY-GE09/12/15/18NA

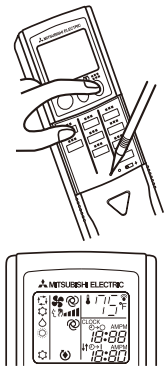

MSZ-GE24NA
MSY-GE24NA

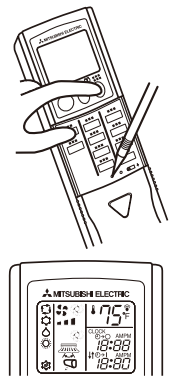

Operational procedure

The cause of abnormality cannot be found because the abnormality does not recur.

Setting up the failure mode recall function

Turn ON the power supply.
<Preparation of the remote controller>
① While pressing both OPERATION SELECT button and TOO COOL button on the remote controller at the same time, press RESET button.
② First, release RESET button.
Hold down the other two buttons for another 3 seconds. Make sure that the indicators on the LCD screen shown in the right figure are all displayed. Then release the buttons.

Press OPERATE/STOP (ON/OFF) button of the remote controller (the set temperature is displayed) with the remote controller headed towards the indoor unit. *1

Does the upper lamp of OPERATION INDICATOR lamp on the indoor unit blink at the interval of 0.5 seconds?
Blinks: Either indoor or outdoor unit is abnormal. Beep is emitted at the same timing as the blinking of the upper lamp of OPERATION INDICATOR lamp. *2

No (OFF) → Indoor unit is normal.
But the outdoor unit might be abnormal because there are some abnormalities that cannot be recalled with this way.
Check if outdoor unit is abnormal according to the detailed outdoor unit failure mode recall function. (Refer to 10-2.2)

*1. Regardless of normal or abnormal condition, a short beep is emitted once the signal is received.

Yes (Blinks)

Judgment of indoor/outdoor abnormality

Before blinking, does the upper lamp of OPERATION INDICATOR lamp stay ON for 3 seconds?
When it stays ON for 3 seconds (without beep):
The outdoor unit is abnormal.

Yes → The outdoor unit is abnormal.
Check the blinking pattern, and identify the abnormal point by referring to the table of outdoor unit failure mode recall function. (Refer to 10-2.3)
Make sure to check at least two consecutive blinking cycles. *3

No → The indoor unit is abnormal.
Check the blinking pattern, and identify the abnormal point by referring to the table of indoor unit failure mode recall function. (Refer to indoor unit service manual.) Make sure to check at least two consecutive blinking cycles. *2

Releasing the failure mode recall function

Release the failure mode recall function by the following procedures.
Turn OFF the power supply and turn it ON again.
Press RESET button of the remote controller.

Repair the failure parts.

Deleting the memorized abnormal condition

① After repairing the unit, recall the failure mode again according to "Setting up the failure mode recall function" mentioned above.
② Press OPERATE/STOP (ON/OFF) button of the remote controller (the set temperature is displayed) with the remote controller headed towards the indoor unit.
③ Press EMERGENCY OPERATION switch so that the memorized abnormal condition is deleted.
④ Release the failure mode recall function according to "Releasing the failure mode recall function" mentioned above.

NOTE: 1. Make sure to release the failure mode recall function after it is set up, otherwise the unit cannot operate properly.
2. If the abnormal condition is not deleted from the memory, the last abnormal condition is kept memorized.

*2. Blinking pattern when the indoor unit is abnormal:

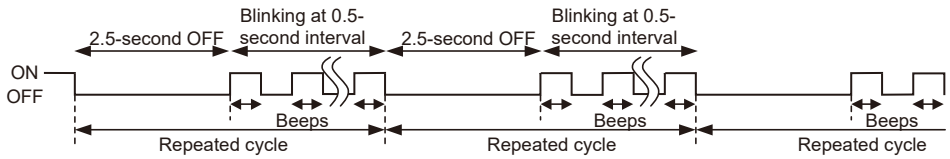

*3.Blinking pattern when the outdoor unit is abnormal:

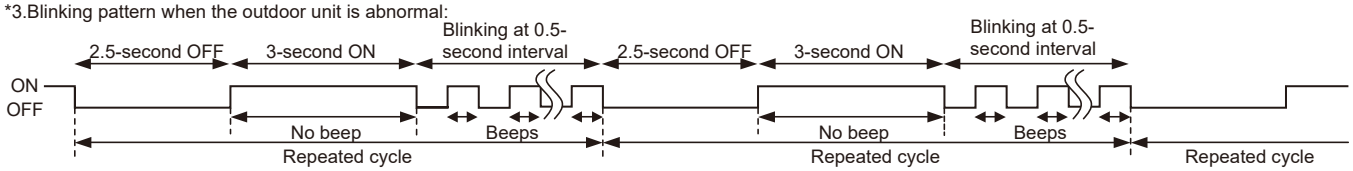

2. Flow chart of the detailed outdoor unit failure mode recall function

Operational procedure

The outdoor unit might be abnormal.
Check if outdoor unit is abnormal according to the following procedures.

↓

Make sure that the remote controller is set to the failure mode recall function.

↓

With the remote controller headed towards the indoor unit, press TOO COOL or TOO WARM button to adjust the set temperature to 77°F (25°C). *1

*1. Regardless of normal or abnormal condition, 2 short beeps are emitted as the signal is received.

↓

Does the upper lamp of OPERATION INDICATOR lamp on the indoor unit blink at the interval of 0.5 seconds?
Blinks: The outdoor unit is abnormal. Beep is emitted at the same timing as the blinking of the upper lamp of OPERATION INDICATOR lamp. *2

No (OFF) → The outdoor unit is normal. → Release the failure mode recall function according to the left mentioned procedure.

Yes (Blinks) ↓

The outdoor unit is abnormal.
Check the blinking pattern, and identify the abnormal point by referring to table of outdoor unit failure mode recall function (10-2.3.).
Make sure to check at least two consecutive blinking cycles. *2

↓

Releasing the failure mode recall function

Release the failure mode recall function by the following procedures.
Turn OFF the power supply and turn it ON again.
Press RESET button of the remote controller.

↓

Repair the failure parts.

↓

Deleting the memorized abnormal condition

① After repairing the unit, recall the failure mode again according to "Setting up the failure mode recall function" (10-2.1.).
② Press OPERATE/STOP (ON/OFF) button of the remote controller (the set temperature is displayed) with the remote controller headed towards the indoor unit.
③ Press EMERGENCY OPERATION switch so that the memorized abnormal condition is deleted.
④ Release the failure mode recall function according to "Releasing the failure mode recall function" mentioned above.

NOTE: 1. Make sure to release the failure mode recall function after it is set up, otherwise the unit cannot operate properly.
2. If the abnormal condition is not deleted from the memory, the last abnormal condition is kept memorized.

*2.Blinking pattern when outdoor unit is abnormal:

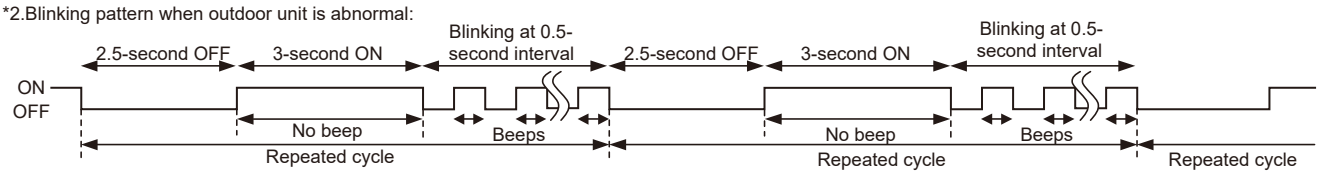

3. Table of outdoor unit failure mode recall function

OPERATION INDICATOR upper lamp (Indoor unit)	Abnormal point (Failure mode / protection)	LED indication (Outdoor P.C. board)	Condition	Remedy	Indoor/ outdoor unit failure mode recall function	Outdoor unit failure mode recall function
OFF	None (Normal)	—	—	—	—	—
2-time blink 2.5 seconds OFF	Outdoor power system	—	Overcurrent protection cut-out operates 3 consecutive times within 1 minute after the compressor gets started.	•Reconnect connectors. •Refer to 10-5. Ⓐ"How to check inverter/ compressor". •Check stop valve.	○	○
3-time blink 2.5 seconds OFF	Discharge temperature thermistor	1-time blink every 2.5 seconds	Thermistor shorts or opens during compressor running.	•Refer to 10-5.Ⓖ"Check of outdoor thermistors". Defective outdoor thermistors can be identified by checking the blinking pattern of LED.	○	○
	Defrost thermistor **(MUZ)**					
	Fin temperature thermistor	3-time blink 2.5 seconds OFF				
	P.C. board temperature thermistor	4-time blink 2.5 seconds OFF				
	Ambient temperature thermistor	2-time blink 2.5 seconds OFF				
	Outdoor heat exchanger temperature thermistor **(MUZ-GE24, MUY-GE24)**					
4-time blink 2.5 seconds OFF	Overcurrent	11-time blink 2.5 seconds OFF	Large current flows into intelligent power module/ power module *1.	•Reconnect compressor connector. •Refer to 10-5.Ⓐ"How to check inverter/ compressor". •Check stop valve.	—	○
	Compressor synchronous abnormality (Compressor start-up failure protection)	12-time blink 2.5 seconds OFF	Waveform of compressor current is distorted.	•Reconnect compressor connector. •Refer to 10-5.Ⓐ"How to check inverter/ compressor".	—	○
5-time blink 2.5 seconds OFF	Discharge temperature	—	Temperature of discharge temperature thermistor exceeds 241°F (116°C), compressor stops. Compressor can restart if discharge temperature thermistor reads 212°F (100°C) or less 3 minutes later.	•Check refrigerant circuit and refrigerant amount. •Refer to 10-5.Ⓚ"Check of LEV".	—	○
6-time blink 2.5 seconds OFF	High pressure	—	Temperature of indoor coil thermistor exceeds 158°F (70°C) in HEAT mode **(MUZ only).** Temperature of outdoor heat exchanger temperature thermistor exceeds 158°F (70°C) in COOL mode.	•Check refrigerant circuit and refrigerant amount. •Check stop valve.	—	○
7-time blink 2.5 seconds OFF	Fin temperature/ P.C. board temperature	7-time blink 2.5 seconds OFF	Temperature of fin temperature thermistor on the inverter P.C. board exceeds 167 ~ 176°F (75 ~ 80°C), or temperature of P.C. board temperature thermistor on the inverter P.C. board exceeds 158 ~ 167°F (70 ~ 75°C).	•Check around outdoor unit. •Check outdoor unit air passage. •Refer to 10-5.Ⓘ"Check of outdoor fan motor".	—	○
8-time blink 2.5 seconds OFF	Outdoor fan motor	—	Outdoor fan has stopped 3 times in a row within 30 seconds after outdoor fan start-up.	•Refer to 10-5.Ⓘ"Check of outdoor fan motor". Refer to 10-5.Ⓛ"Check of inverter P.C. board".	—	○
9-time blink 2.5 seconds OFF	Nonvolatile memory data	5-time blink 2.5 seconds OFF	Nonvolatile memory data cannot be read properly.	•Replace the inverter P.C. board.	○	○
	Power module **(MUZ-GE24, MUY-GE24)**	6-time blink 2.5 seconds OFF	The interphase short circuit occurs in the output of the intelligent power module (IPM)/power module (IPM) *1. The compressor winding shorts circuit.	•Refer to 10-5.Ⓐ"How to check inverter/ compressor".		
10-time blink 2.5 seconds OFF	Discharge temperature	—	Temperature of discharge temperature thermistor has been 122°F (50°C) or less for 20 minutes.	•Refer to 10-5.Ⓚ"Check of LEV". •Check refrigerant circuit and refrigerant amount.	—	○

NOTE: Blinking patterns of this mode differ from the ones of Troubleshooting check table (10-3.).

*1

Intelligent power module: **MUZ-GE09/12/15/18/24NA**, **MUY-GE09/12/15/18/24NA**

Power module: **Other models**

OPERATION INDICATOR upper lamp (Indoor unit)	Abnormal point (Failure mode / protection)	LED indication (Outdoor P.C. board)	Condition	Remedy	Indoor/ outdoor unit failure mode recall function	Outdoor unit failure mode recall function
11-time blink 2.5 seconds OFF	DC voltage	8-time blink 2.5 seconds OFF	DC voltage of inverter cannot be detected normally.	•Refer to 10-5.Ⓐ"How to check inverter/ compressor".	—	○
	Each phase current of compressor	9-time blink 2.5 seconds OFF	Each phase current of compressor cannot be detected normally.			
12-time blink 2.5 seconds OFF	Overcurrent Compressor open-phase	10-time blink 2.5 seconds OFF	Large current flows into intelligent power module (IPM)/power module (IPM) *1. The open-phase operation of compressor is detected. The interphase short circuit occurs in the output of the intelligent power module (IPM)/power module (IPM) *1. The compressor winding shorts circuit.	•Reconnect compressor connector. •Refer to 10-5. Ⓐ"How to check inverter/ compressor".	—	○
14-time blink 2.5 seconds OFF	Stop valve (Closed valve)	14-time blink 2.5 seconds OFF	Closed valve is detected by compressor current.	•Check stop valve	○	○
	4-way valve/ Pipe temperature	16-time blink 2.5 seconds OFF	The 4-way valve does not work properly. The indoor coil thermistor detects an abnormal temperature.	•Check the 4-way valve. •Replace the inverter P.C. board.		

NOTE: Blinking patterns of this mode differ from the ones of Troubleshooting check table (10-3.).

*1

Intelligent power module: **MUZ-GE09/12/15/18/24NA**, **MUY-GE09/12/15/18/24NA**

Power module: **Other models**

10-3. TROUBLESHOOTING CHECK TABLE

No.	Symptom	LED indication	Abnormal point/ Condition	Condition	Remedy
1	Outdoor unit does not operate.	1-time blink every 2.5 seconds	Outdoor power system	Overcurrent protection cut-out operates 3 consecutive times within 1 minute after the compressor gets started, or failure of restart of compressor has repeated 24 times.	•Reconnect connector of compressor. •Refer to 10-5.Ⓐ "How to check inverter/ compressor". •Check stop valve.
2			Outdoor thermistors	Discharge temperature thermistor, fin temperature thermistor, defrost thermistor, outdoor heat exchanger temperature thermistor, P.C. board temperature thermistor or ambient temperature thermistor shorts or opens during compressor running.	•Refer to 10-5.Ⓖ "Check of outdoor thermistors".
3			Outdoor control system	Nonvolatile memory data cannot be read properly. (The upper lamp of OPERATION INDICATOR of the indoor unit lights up or blinks 7 times.)	•Replace inverter P.C. board.
4		6-time blink 2.5 seconds OFF	Serial signal	The communication fails between the indoor and outdoor unit for 3 minutes.	•Refer to 10-5.Ⓜ "How to check miswiring and serial signal error.
5		11-time blink 2.5 seconds OFF	Stop valve/ Closed valve	Closed valve is detected by compressor current.	•Check stop valve.
6		14-time blink 2.5 seconds OFF	Outdoor unit (Other abnormality)	Outdoor unit is defective.	•Refer to 10-2.2. "Flow chart of the detailed outdoor unit failure mode recall function".
7		16-time blink 2.5 seconds OFF	4-way valve/ Pipe temperature	The 4-way valve does not work properly. The indoor coil thermistor detects an abnormal temperature.	•Refer to 10-5.Ⓗ "Check of R.V. coil". •Replace the inverter P.C. board.
8	'Outdoor unit stops and restarts 3 minutes later' is repeated.	2-time blink 2.5 seconds OFF	Overcurrent protection	Large current flows into intelligent power module/power module *1. * When overcurrent protection occurs within 10 seconds after compressor starts, compressor restarts after 15 seconds **(MUZ-GE09/12/15/18, MUY-GE09/12/15/18)**.	•Reconnect connector of compressor. •Refer to 10-5.Ⓐ "How to check inverter/ compressor". •Check stop valve.
9		3-time blink 2.5 seconds OFF	Discharge temperature overheat protection	Temperature of discharge temperature thermistor exceeds 241°F (116°C), compressor stops. Compressor can restart if discharge temperature thermistor reads 212°F (100°C) or less 3 minutes later.	•Check refrigerant circuit and refrigerant amount. •Refer to 10-5.Ⓚ "Check of LEV".
10		4-time blink 2.5 seconds OFF	Fin temperature /P.C. board temperature thermistor overheat protection	Temperature of fin temperature thermistor on the heat sink exceeds 167 ~ 176°F (75 ~ 80°C) or temperature of P.C. board temperature thermistor on the inverter P.C. board exceeds 158 ~ 167°F (70 ~ 75°C).	•Check around outdoor unit. •Check outdoor unit air passage. •Refer to 10-5.Ⓘ "Check of outdoor fan motor".
11		5-time blink 2.5 seconds OFF	High pressure protection	Temperature of indoor coil thermistor exceeds 158°F (70°C) in HEAT mode **(MUZ only)**. Temperature of outdoor heat exchanger temperature thermistor exceeds 158°F (70°C) in COOL mode.	•Check refrigerant circuit and refrigerant amount. •Check stop valve.
12		8-time blink 2.5 seconds OFF	Compressor synchronous abnormality	The waveform of compressor current is distorted.	•Reconnect connector of compressor. •Refer to 10-5.Ⓐ "How to check inverter/ compressor".
13		10-time blink 2.5 seconds OFF	Outdoor fan motor	Outdoor fan has stopped 3 times in a row within 30 seconds after outdoor fan start-up.	•Refer to 10-5.Ⓘ "Check of outdoor fan motor. •Refer to 10-5.Ⓛ "Check of inverter P.C. board.
14		12-time blink 2.5 seconds OFF	Each phase current of compressor	Each phase current of compressor cannot be detected normally.	•Refer to 10-5.Ⓐ "How to check inverter/ compressor".
15		13-time blink 2.5 seconds OFF	DC voltage	DC voltage of inverter cannot be detected normally.	•Refer to 10-5.Ⓐ "How to check inverter/ compressor".
16	Outdoor unit operates.	1-time blink 2.5 seconds OFF	Frequency drop by current protection	Current from power outlet is nearing Max. fuse size.	The unit is normal, but check the following. •Check if indoor filters are clogged. •Check if refrigerant is short. •Check if indoor/outdoor unit air circulation is short cycled.
17		3-time blink 2.5 seconds OFF	Frequency drop by high pressure protection	Temperature of indoor coil thermistor exceeds 131°F (55°C) in HEAT mode, compressor frequency lowers.	
			Frequency drop by defrosting in COOL mode	Indoor coil thermistor reads 46°F (8°C) or less in COOL mode, compressor frequency lowers.	
18		4-time blink 2.5 seconds OFF	Frequency drop by discharge temperature protection	Temperature of discharge temperature thermistor exceeds 232°F (111°C), compressor frequency lowers.	•Check refrigerant circuit and refrigerant amount. •Refer to 10-5.Ⓚ "Check of LEV". •Refer to 10-5.Ⓖ "Check of outdoor thermistors".

NOTE: 1. The location of LED is illustrated at the right figure. Refer to 10-6.1.
2. LED is lit during normal operation.
The blinking frequency shows the number of times the LED blinks after every 2.5-second OFF.
(Example) When the blinking frequency is "2".

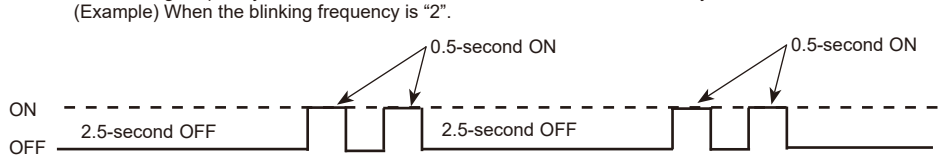

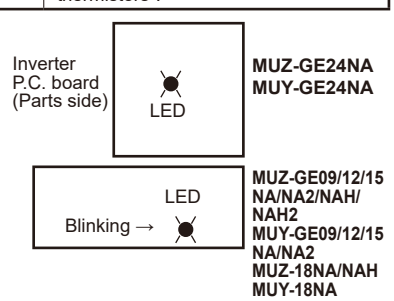

*1
Intelligent power module: **MUZ-GE09/12/15/18/24NA**, **MUY-GE09/12/15/18/24NA**
Power module: **Other models**

10-3. TROUBLESHOOTING CHECK TABLE

No.	Symptom	LED indication	Abnormal point/ Condition	Condition	Remedy
19	Outdoor unit operates.	7-time blink 2.5 seconds OFF	Low discharge temperature protection	Temperature of discharge temperature thermistor has been 122°F (50°C) or less for 20 minutes.	•Refer to 10-5.Ⓚ "Check of LEV". •Check refrigerant circuit and refrigerant amount.
20		8-time blink 2.5 seconds OFF	PAM protection PAM: Pulse Amplitude Modulation	The overcurrent flows into IGBT (Insulated Gate Bipolar transistor: TR821) or the bus-bar voltage reaches 320 V or more, PAM stops and restarts.	This is not malfunction. PAM protection will be activated in the following cases: 1 Instantaneous power voltage drop (Short time power failure) 2 When the power supply voltage is high.
			Zero cross detecting circuit	Zero cross signal for PAM control cannot be detected.	
21		9-time blink 2.5 seconds OFF	Inverter check mode	The connector of compressor is disconnected, inverter check mode starts.	•Check if the connector of the compressor is correctly connected. Refer to 10-5.Ⓐ "How to check inverter/compressor".

NOTE: 1. The location of LED is illustrated at the right figure. Refer to 10-6.1.
2. LED is lit during normal operation.
The blinking frequency shows the number of times the LED blinks after every 2.5-second OFF. Blinking (Example) When the blinking frequency is "2".

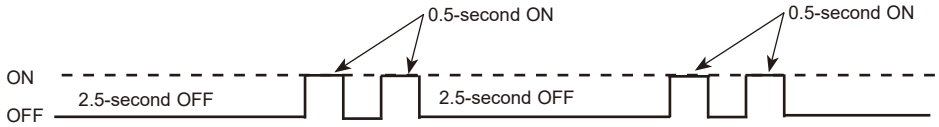

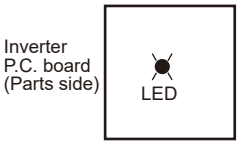

MUZ-GE24NA
MUY-GE24NA

MUZ-GE09/12/15 NA/NA2/NAH/ NAH2
MUY-GE09/12/15 NA/NA2
MUZ-18NA/NAH
MUY-18NA

10-4. TROUBLESHOOTING CRITERION OF MAIN PARTS

MUZ-GE09NA MUZ-GE12NA MUZ-GE15NA MUZ-GE18NA MUZ-GE24NA
MUZ-GE09NA2 MUZ-GE12NA2 MUZ-GE15NA2
MUZ-GE09NAH MUZ-GE12NAH MUZ-GE15NAH MUZ-GE18NAH
MUZ-GE09NAH2 MUZ-GE12NAH2 MUZ-GE15NAH2
MUY-GE09NA MUY-GE12NA MUY-GE15NA MUY-GE18NA MUY-GE24NA
MUY-GE09NA2 MUY-GE12NA2 MUY-GE15NA2

Part name	Check method and criterion	Figure
Defrost thermistor (RT61) **(MUZ)** Fin temperature thermistor (RT64) Ambient temperature thermistor (RT65) Outdoor heat exchanger temperature thermistor (RT68)	Measure the resistance with a tester. Refer to 10-6. "Test point diagram and voltage", 1. "Inverter P.C. board", for the chart of thermistor.	
Discharge temperature thermistor (RT62)	Measure the resistance with a tester. Before measurement, hold the thermistor with your hands to warm it up. Refer to 10-6. "Test point diagram and voltage", 1. "Inverter P.C. board", for the chart of thermistor.	
Compressor	Measure the resistance between terminals using a tester. (Temperature: -4 ~ 104°F (-20 ~ 40°C))	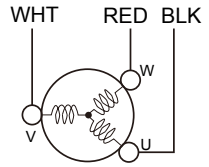

	Normal (Ω)			
	GE09	**GE12**	**GE15/18**	**GE24**
U-V U-W V-W	1.36 ~ 1.93	1.52 ~ 2.17	0.78 ~ 1.11	0.83 ~ 1.18

<table>
<tr><th>Part name</th><th>Check method and criterion</th><th>Figure</th></tr>
<tr><td>Outdoor fan motor</td><td>Measure the resistance between lead wires using a tester.
(Temperature: -4 ~ 104°F (-20 ~ 40°C))
<table>
<tr><th rowspan="2">Color of lead wire</th><th colspan="3">Normal (Ω)</th></tr>
<tr><th>GE09/12</th><th>GE15</th><th>GE18/24</th></tr>
<tr><td>RED – BLK
BLK – WHT
WHT – RED</td><td colspan="2">28 ~ 40</td><td>11 ~ 16</td></tr>
</table></td><td> 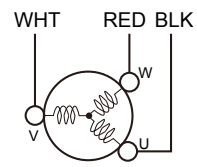
</td></tr>
<tr><td>R. V. coil (21S4)
(MUZ)</td><td>Measure the resistance using a tester.
(Temperature: 14 ~ 104°F (-10 ~ 40°C))
<table>
<tr><th>Normal (kΩ)</th></tr>
<tr><td>0.97 ~ 1.38</td></tr>
</table></td><td></td></tr>
<tr><td rowspan="2">Expansion valve coil
(LEV)</td><td>Measure the resistance using a tester.
(Temperature: 14 ~ 104°F (-10 ~ 40°C))
MUZ-GE09/12/15/18NA
MUZ-GE09/12/15NA2
MUZ-GE09/12/15/18NAH
MUZ-GE09/12/15NAH2
MUY-GE09/12/15/18NA
MUY-GE09/12/15NA2
<table>
<tr><th>Color of lead wire</th><th>Normal (Ω)</th></tr>
<tr><td>WHT – RED</td><td rowspan="4">37 ~ 54</td></tr>
<tr><td>RED – ORN</td></tr>
<tr><td>YLW – BRN</td></tr>
<tr><td>BRN – BLU</td></tr>
</table></td><td> 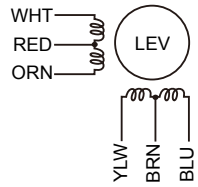
</td></tr>
<tr><td>Measure the resistance using a tester.
(Temperature: 14 ~ 104°F (-10 ~ 40°C))
MUZ-GE24NA, MUY-GE24NA
<table>
<tr><th>Color of lead wire</th><th>Normal (Ω)</th></tr>
<tr><td>RED – ORN</td><td rowspan="4">37 ~ 54</td></tr>
<tr><td>RED – WHT</td></tr>
<tr><td>RED – BLU</td></tr>
<tr><td>RED – YLW</td></tr>
</table></td><td> 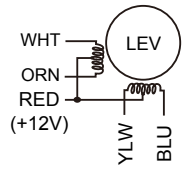
</td></tr>
<tr><td>Defrost heater
MUZ-GE•NAH</td><td>Measure the resistance using a tester.
(Temperature: 14 ~ 104°F (-10 ~ 40°C))
<table>
<tr><th>Normal (Ω)</th></tr>
<tr><td>349 ~ 428</td></tr>
</table></td><td></td></tr>
</table>

10-5. TROUBLESHOOTING FLOW

Ⓐ How to check inverter/compressor

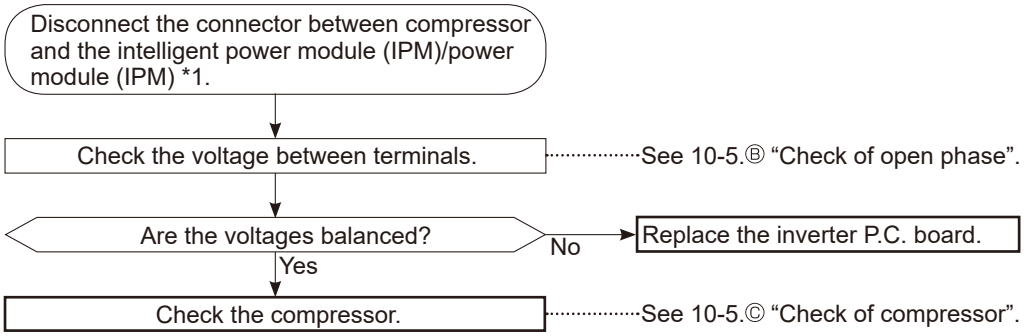

Ⓑ Check of open phase

- With the connector between the compressor and intelligent power module/power module *1 disconnected, activate the inverter and check if the inverter is normal by measuring the voltage balance between the terminals.

Output voltage is 50 - 130 V. (The voltage may differ according to the tester.)

<< Operation method>>
Start cooling or heating operation by pressing EMERGENCY OPERATION switch on the indoor unit. (TEST RUN OPERATION: Refer to 7-6.)
<<Measurement point>>
at 3 points
BLK (U) - WHT (V)
BLK (U) - RED (W)
WHT(V) - RED (W)

Measure AC voltage between the lead wires at 3 points.

NOTE: 1. Output voltage varies according to power supply voltage.
2. Measure the voltage by analog type tester.
3. During this check, LED of the inverter P.C. board blinks 9 times. (Refer to 10-6.1.)

Ⓒ Check of compressor

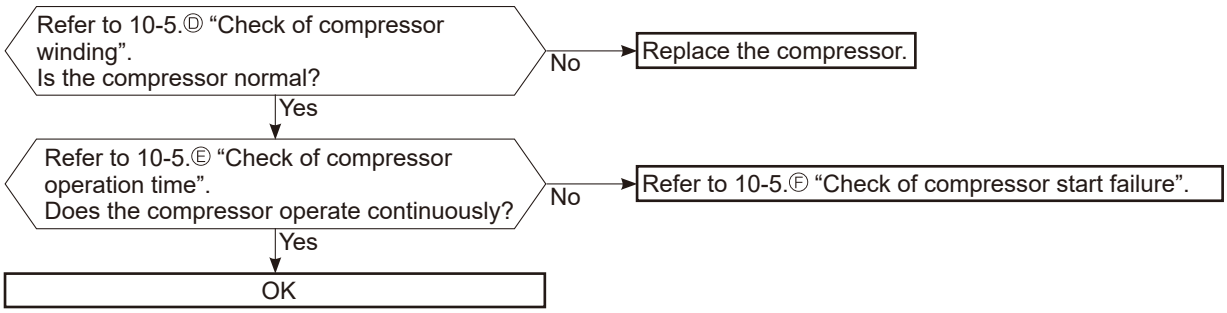

*1
Intelligent power module: **MUZ-GE09/12/15/18/24NA**, **MUY-GE09/12/15/18/24NA**
Power module: **Other models**

Ⓓ Check of compressor winding

- Disconnect the connector between the compressor and intelligent power module/power module *1, and measure the resistance between the compressor terminals.

<<Measurement point>>
At 3 points
BLK - WHT
BLK - RED
WHT - RED
* Measure the resistance between the lead wires at 3 points.

<<Judgement>>
Refer to 10-4.
0[Ω]····· Abnormal [short]
Infinite [Ω]····· Abnormal [open]
NOTE: Be sure to zero the ohmmeter before measurement.

*1
Intelligent power module: **MUZ-GE09/12/15/18/24NA**, **MUY-GE09/12/15/18/24NA**
Power module: **Other models**

Ⓔ Check of compressor operation time

- Connect the compressor and activate the inverter. Then measure the time until the inverter stops due to over current.

<<Operation method>>
Start heating or cooling operation by pressing EMERGENCY OPERATION switch on the indoor unit.
(TEST RUN OPERATION: Refer to 7-6.)
<<Measurement>>
Measure the time from the start of compressor to the stop of compressor due to overcurrent.

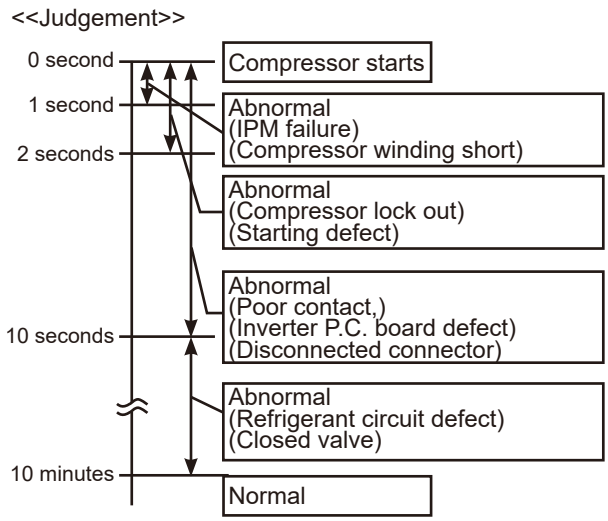

Ⓕ Check of compressor start failure

Confirm that 1~4 is normal.
- Electrical circuit check
1. Contact of the compressor connector
2. Output voltage of inverter P.C. board and balance of them (See 10-5.Ⓑ)
3. Direct current voltage between DB61(+) and (-) (**MUZ-GE09/12/1518, MUY-GE09/12/1518)**/ JP715(+) and JP30(-) (**MUZ-GE24, MUY-GE24)** on the inverter P.C. board
4. Voltage between outdoor terminal block S1-S2

↓

Does the compressor run for 10 seconds or more after it starts?
- Yes → Check the refrigerant circuit. Check the stop valve.
- No ↓

After the compressor is heated with a drier, does the compressor start? *1
- No → Replace the compressor.
- Yes ↓

Compressor start failure. Activate pre-heat control. (Refer to 9-2. "PRE-HEAT CONTROL SETTING")

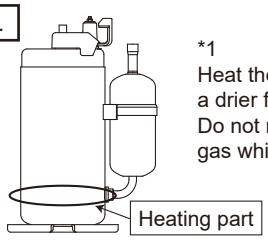

*1
Heat the compressor with a drier for about 20 minutes. Do not recover refrigerant gas while heating.

Ⓖ Check of outdoor thermistors

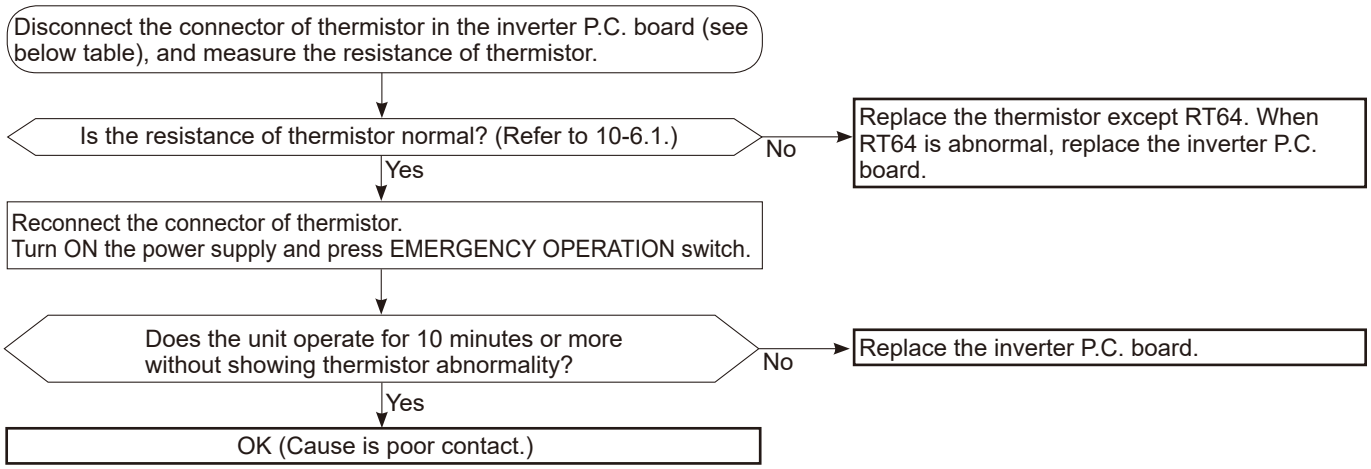

MUZ-GE09/12/15NA/NA2/NAH/NAH2, MUZ-GE18NA/NAH, MUY-GE09/12/15NA/NA2, MUY-GE18NA

Thermistor	Symbol	Connector, Pin No.	Board
Defrost **(MUZ)**	RT61	Between CN641 pin1 and pin2	Inverter P.C. board
Discharge temperature	RT62	Between CN641 pin3 and pin4	
Fin temperature	RT64	Between CN642 pin1 and pin2	
Ambient temperature	RT65	Between CN643 pin1 and pin2	
Outdoor heat exchanger temperature	RT68	Between CN644 pin1 and pin3	

MUZ-GE24NA, MUY-GE24NA

Thermistor	Symbol	Connector, Pin No.	Board
Defrost **(MUZ)**	RT61	Between CN671 pin1 and pin2	Inverter P.C. board
Discharge temperature	RT62	Between CN671 pin3 and pin4	
Fin temperature	RT64	Between CN673 pin1 and pin2	
Ambient temperature	RT65	Between CN672 pin1 and pin2	
Outdoor heat exchanger temperature	RT68	Between CN671 pin5 and pin6	

Ⓗ Check of R.V. coil

MUZ-GE09/12/15NA/NA2/NAH/NAH2, MUZ-GE18NA/NAH, MUZ-GE24NA

* First of all, measure the resistance of R.V. coil to check if the coil is defective. Refer to 10-4.
* In case CN721 (**MUZ-GE09/12/15/18**)/CN602 (**MUZ-GE24**) is disconnected or R.V. coil is open, voltage is generated between the terminal pins of the connector although no signal is being transmitted to R.V. coil. Check if CN721 (**MUZ-GE09/12/15/18**)/CN602 (**MUZ-GE24**) is connected.

Unit operates in COOL mode even if it is set to HEAT mode.

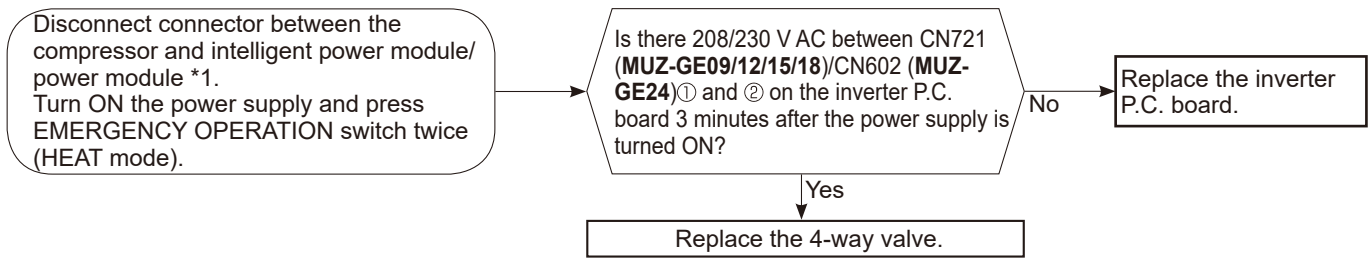

*1
Intelligent power module: **MUZ-GE09/12/15/18/24NA**, **MUY-GE09/12/15/18/24NA**
Power module: **Other models**

Unit operates in HEAT mode even if it is set to COOL mode.

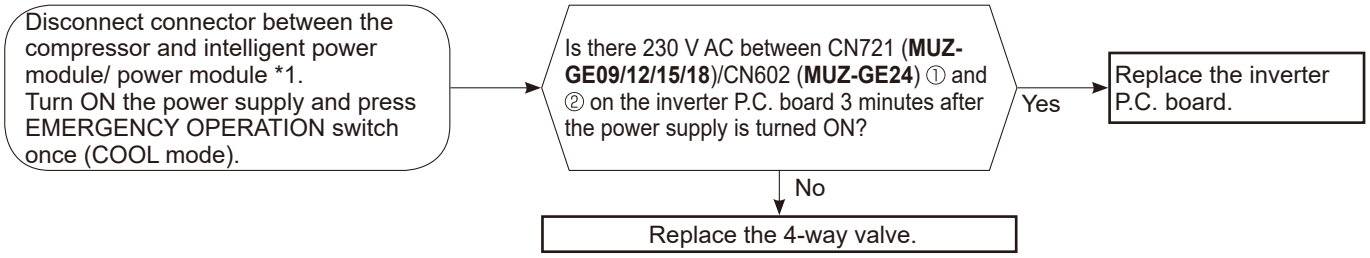

*1
Intelligent power module: **MUZ-GE09/12/15/18/24NA**, **MUY-GE09/12/15/18/24NA**
Power module: **Other models**

Ⓘ Check of outdoor fan motor

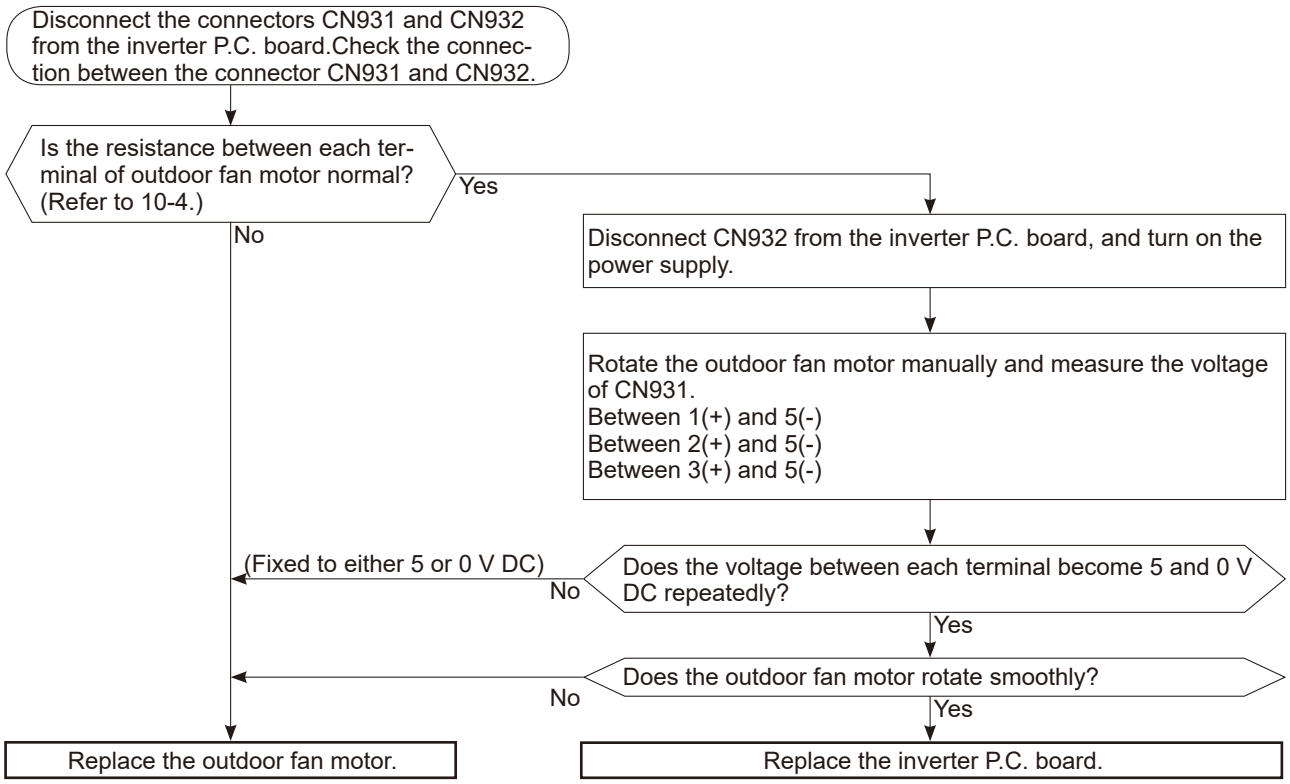

Ⓙ Check of power supply

MUZ-GE09/12/15NA/NA2/NAH/NAH2 MUZ-GE18NA/NAH
MUY-GE09/12/15NA/NA2 MUY-GE18NA

*1
Intelligent power module: **MUZ-GE09/12/15/18/24NA**, **MUY-GE09/12/15/18/24NA**
Power module: **Other models**

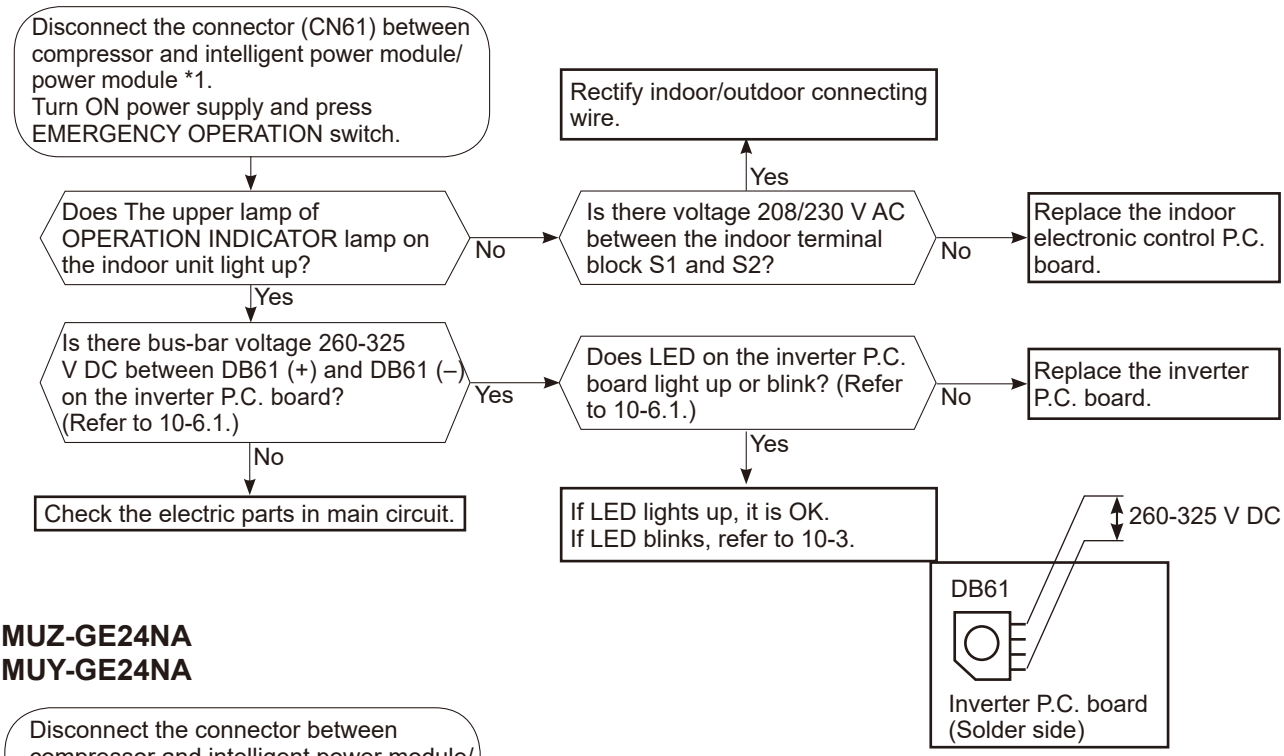

MUZ-GE24NA
MUY-GE24NA

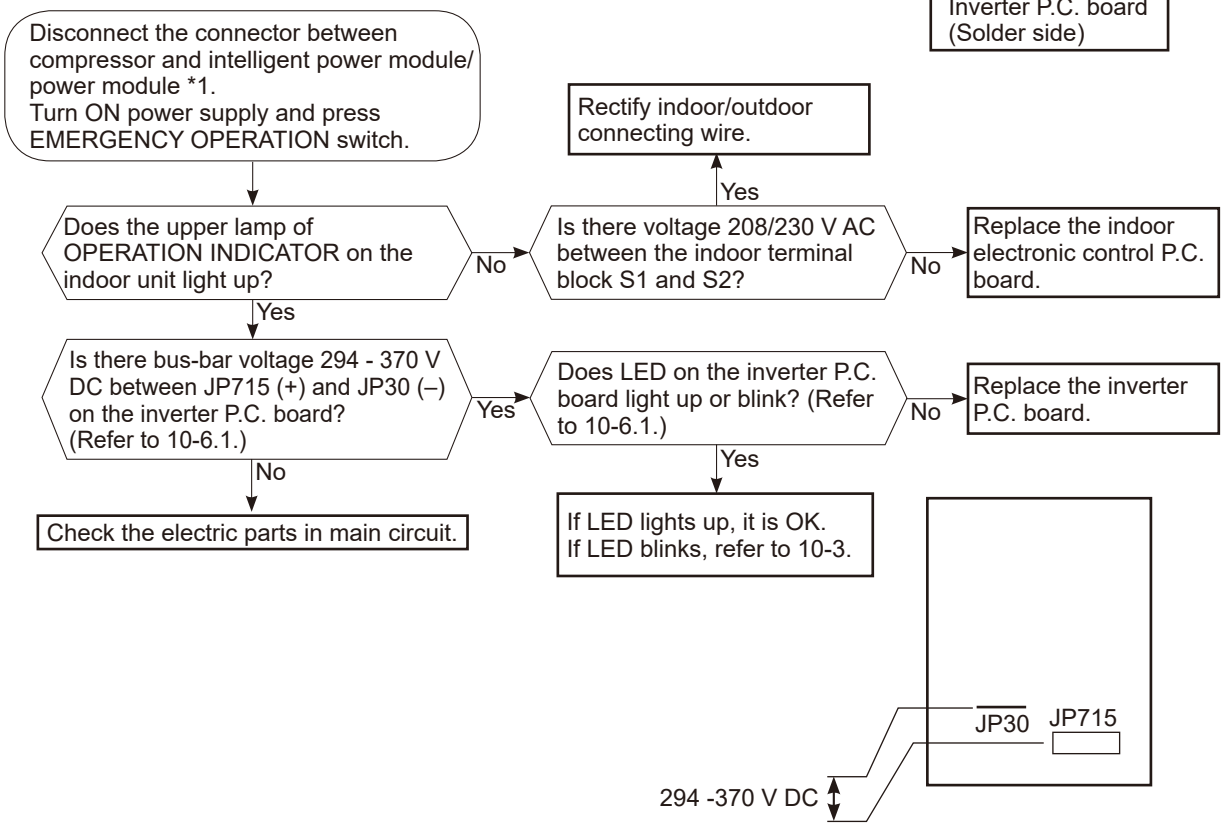

Ⓚ Check of LEV (Expansion valve)

Turn ON the power supply.
<Preparation of the remote controller>
① While pressing both OPERATION SELECT button and TOO COOL button on the remote controller at the same time, press RESET button.
② First, release RESET button.
Hold down the other two buttons for another 3 seconds. Make sure that the indicators on the LCD screen shown in the right figure are all displayed.
Then release the buttons.

↓

Press OPERATE/STOP (ON/OFF) button of the remote controller (the set temperature is displayed) with the remote controller headed towards the indoor unit. *1

↓

Expansion valve operates in full-opening direction.

↓

Do you hear the expansion valve "click, click·····"?
Do you feel the expansion valve vibrate on touching it ?

Yes → OK

No ↓

Is LEV coil properly fixed to the expansion valve?

No → Properly fix the LEV coil to the expansion valve.

Yes ↓

Does the resistance of LEV coil have the characteristics? (Refer to 10-4.)

Yes →

Measure each voltage between connector pins of CN724 on the inverter P.C. board.
1. Pin③(-) — Pin①(+)
2. Pin④(-) — Pin①(+)
3. Pin⑤(-) — Pin①(+)
4. Pin⑥(-) — Pin①(+)
Is there about 3 ~ 5 V AC between each?
NOTE: Measure the voltage by an analog tester.

No → Replace the inverter P.C. board.

Yes ↓

Replace the expansion valve.

No ↓

Replace the LEV coil.

MSZ-GE06/09/12/15/18NA
MSY-GE09/12/15/18NA

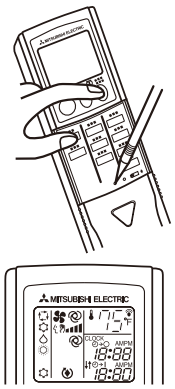

MSZ-GE24NA
MSY-GE24NA

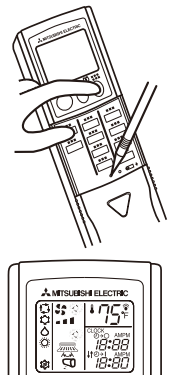

*1. Regardless of normal or abnormal condition, a short beep is emitted once the signal is received.

NOTE: After check of LEV, take the following steps.
1. Turn OFF the power supply and turn ON it again.
2. Press RESET button on the remote controller.

Ⓛ Check of inverter P.C. board

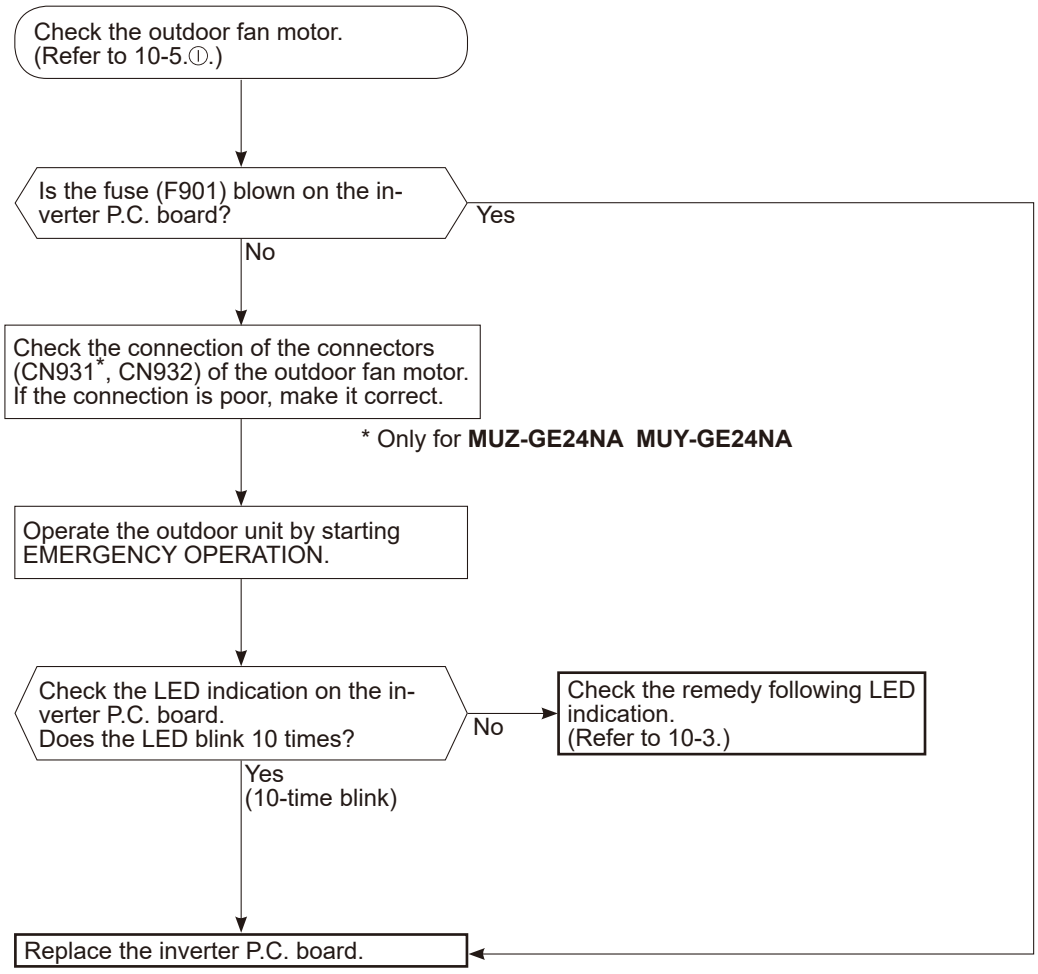

Ⓜ How to check miswiring and serial signal error

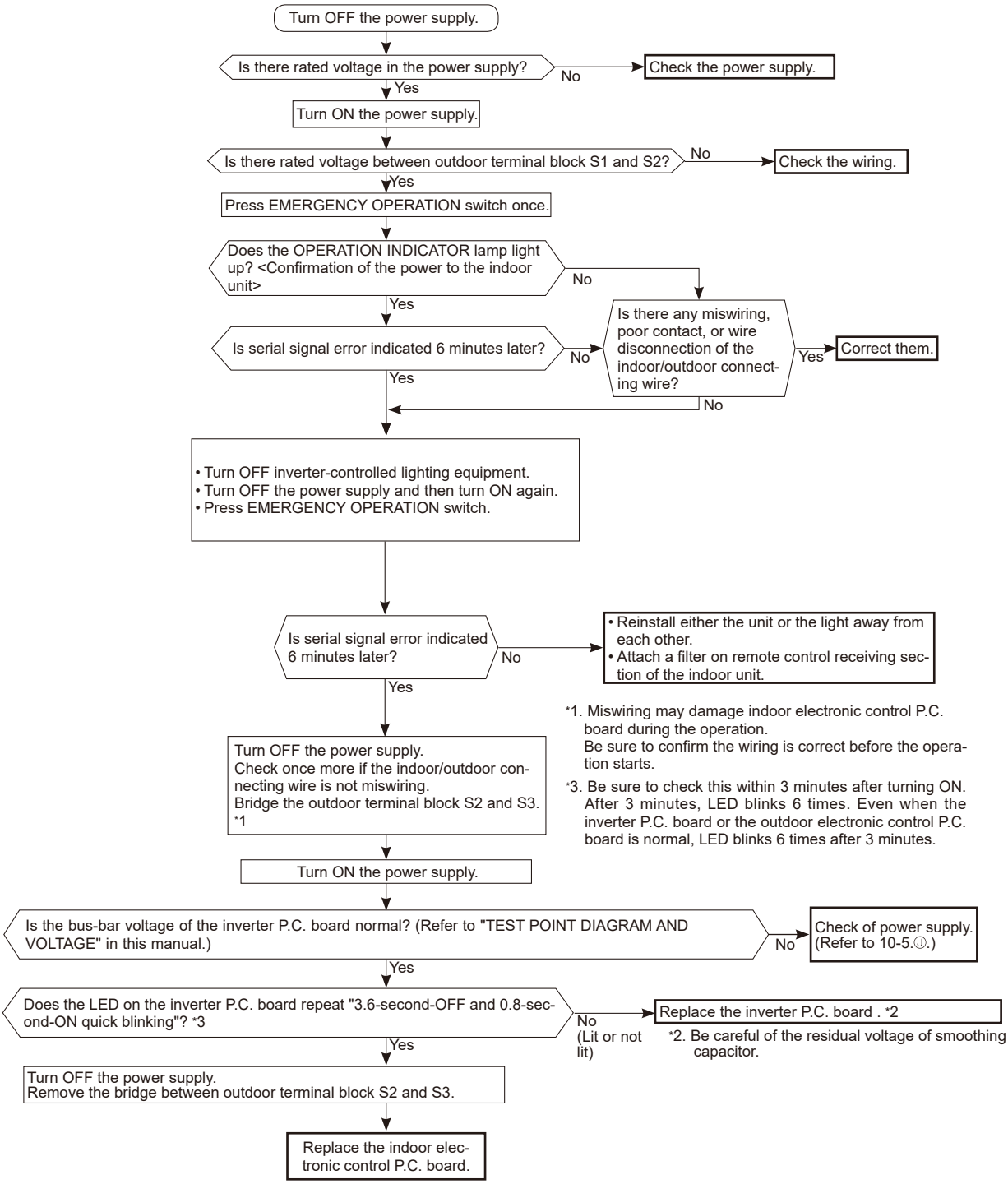

*1. Miswiring may damage indoor electronic control P.C. board during the operation.
Be sure to confirm the wiring is correct before the operation starts.

*3. Be sure to check this within 3 minutes after turning ON. After 3 minutes, LED blinks 6 times. Even when the inverter P.C. board or the outdoor electronic control P.C. board is normal, LED blinks 6 times after 3 minutes.

*2. Be careful of the residual voltage of smoothing capacitor.

Ⓝ Electromagnetic noise enters into TV sets or radios

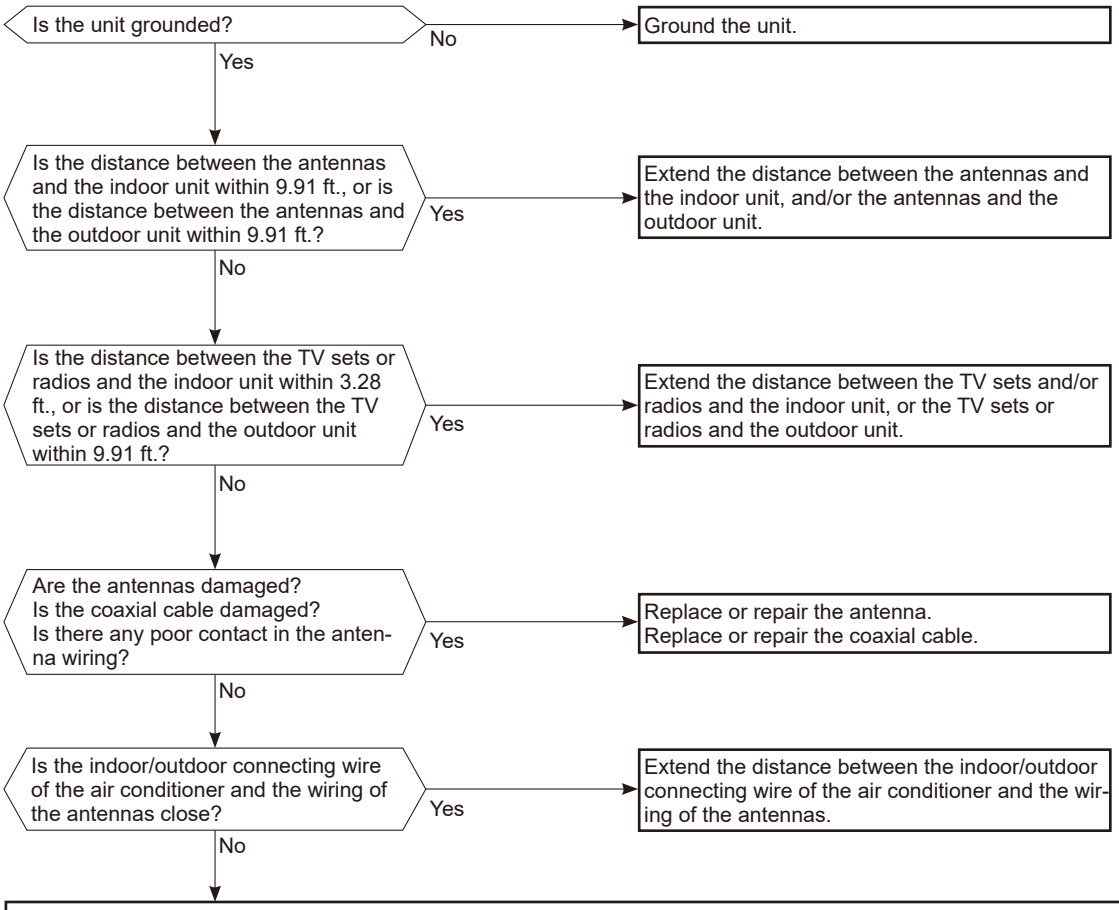

Even if all of the above conditions are fulfilled, the electromagnetic noise may enter, depending on the electric field strength or the installation condition (combination of specific conditions such as antennas or wiring).
Check the followings before asking for service.

1. Devices affected by the electromagnetic noise
   TV sets, radios (FM/AM broadcast, shortwave)
2. Channel, frequency, broadcast station affected by the electromagnetic noise
3. Channel, frequency, broadcast station unaffected by the electromagnetic noise
4. Layout of:
   indoor/outdoor unit of the air conditioner, indoor/outdoor wiring, grounding wire, antennas, wiring from antennas, receiver
5. Electric field intensity of the broadcast station affected by the electromagnetic noise
6. Presence or absence of amplifier such as booster
7. Operation condition of air conditioner when the electromagnetic noise enters in
   1) Turn OFF the power supply once, and then turn ON the power supply. In this situation, check for the electromagnetic noise.
   2) Within 3 minutes after turning ON the power supply, press OPERATE/STOP (ON/OFF) button on the remote controller for power ON, and check for the electromagnetic noise.
   3) After a short time (3 minutes later after turning ON), the outdoor unit starts running. During operation, check for the electromagnetic noise.
   4) Press OPERATE/STOP (ON/OFF) button on the remote controller for power OFF, when the outdoor unit stops but the indoor/outdoor communication still runs on. In this situation, check for the electromagnetic noise.

10-6. TEST POINT DIAGRAM AND VOLTAGE

1. Inverter P.C. board

MUZ-GE09NA	**MUZ-GE12NA**	**MUZ-GE15NA**
MUZ-GE09NA2	**MUZ-GE12NA2**	**MUZ-GE15NA2**
MUZ-GE09NAH	**MUZ-GE12NAH**	**MUZ-GE15NAH**
MUZ-GE09NAH2	**MUZ-GE12NAH2**	**MUZ-GE15NAH2**
MUY-GE09NA	**MUY-GE12NA**	**MUY-GE15NA**
MUY-GE09NA2	**MUY-GE12NA2**	**MUY-GE15NA2**

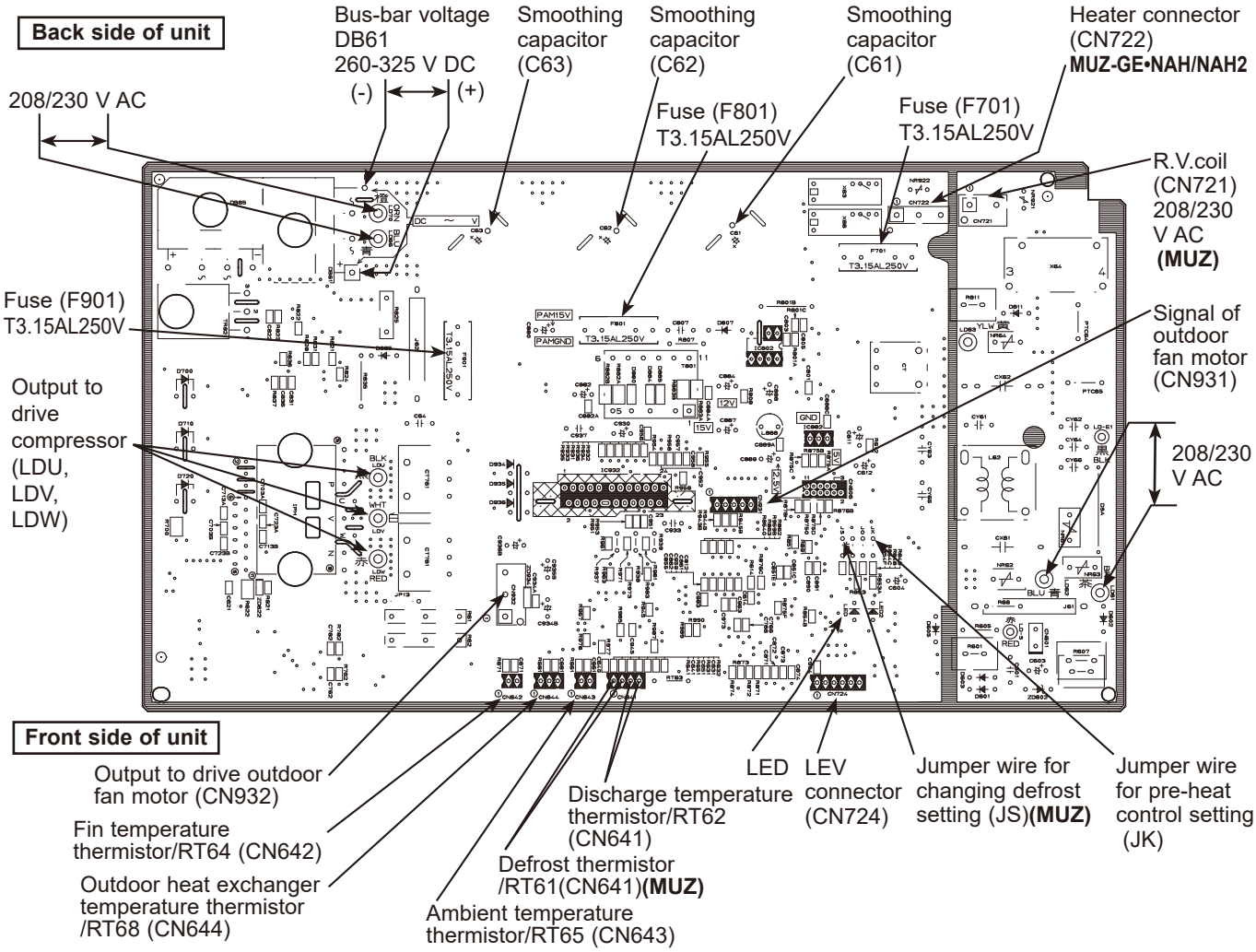

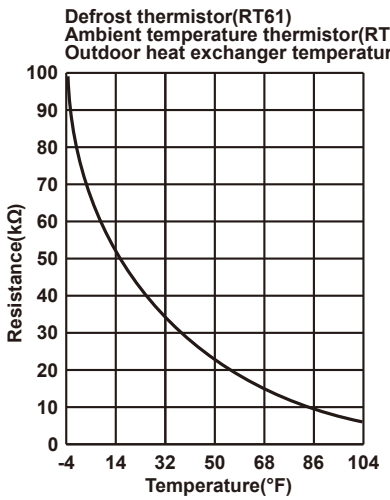

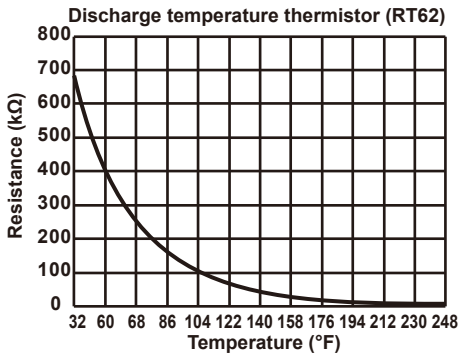

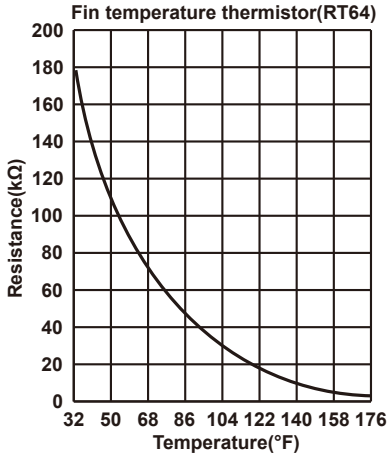

MUZ-GE18NA
MUZ-GE18NAH
MUY-GE18NA

Back side of unit

Bus-bar voltage DB61 260-325 V DC (-) (+)

Smoothing capacitor (C63)

Smoothing capacitor (C62)

Smoothing capacitor (C61)

Fuse (F701) T3.15AL250V

R.V.coil (CN721) 208/230 V AC **(MUZ)**

208/230 V AC

Fuse (F801) T3.15AL250V

Heater connector (CN722) **MUZ-GE•NAH**

Fuse (F901) T3.15AL250V

Output to drive compressor (LDU, LDV, LDW)

208/230 V AC

Front side of unit

Fin temperature thermistor /RT64 (CN642)

Outdoor heat exchanger temperature thermistor /RT68(CN644)

Ambient temperature thermistor /RT65 (CN643)

Defrost thermistor /RT61(CN641)**(MUZ)**

Discharge temperature thermistor /RT62 (CN641)

Output to drive outdoor fan motor (CN932)

Signal of outdoor fan motor (CN931)

LEV connector (CN724)

LED

Jumper wire for changing defrost setting (JS)**(MUZ)**

Jumper wire for pre-heat control setting (JK)

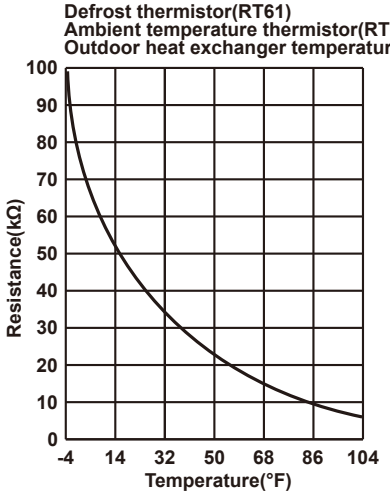

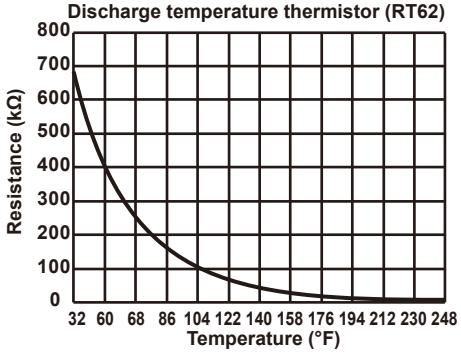

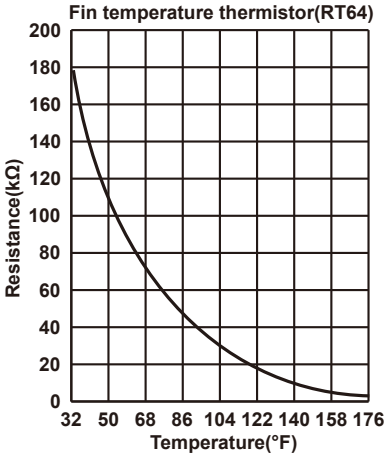

MUZ-GE24NA
MUY-GE24NA

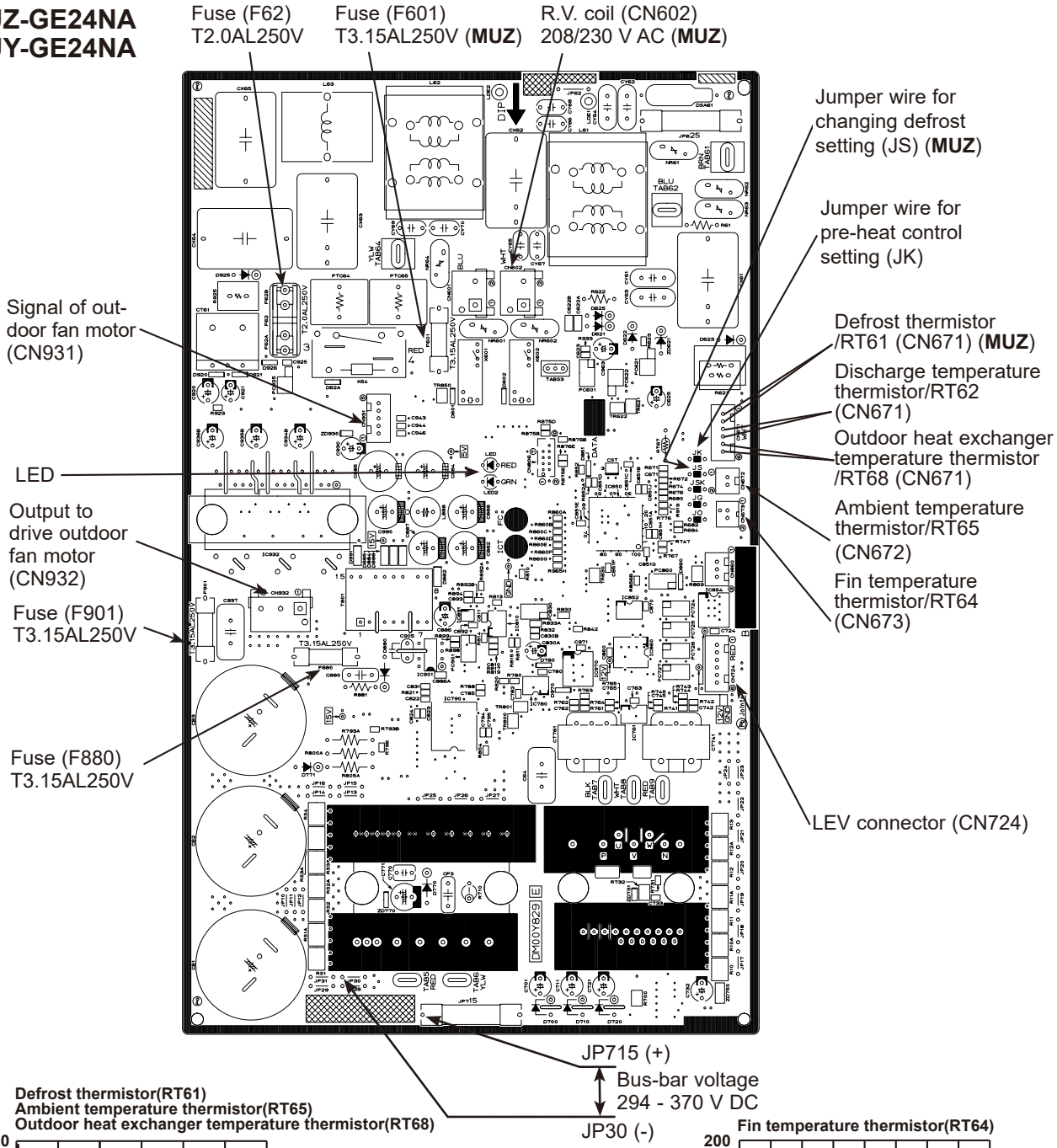

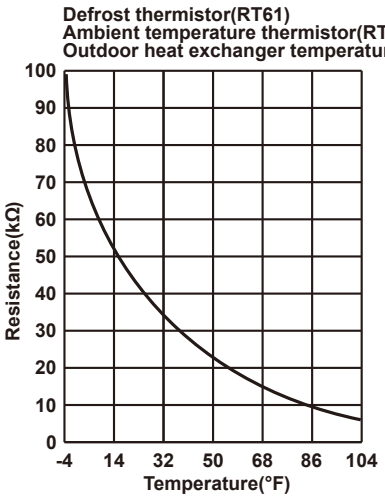

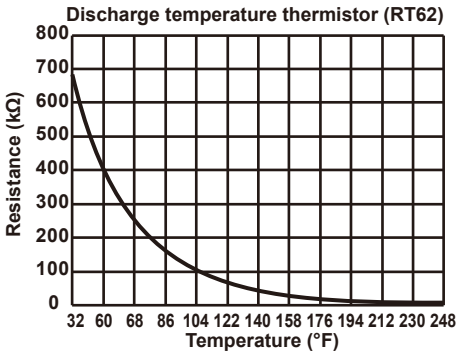

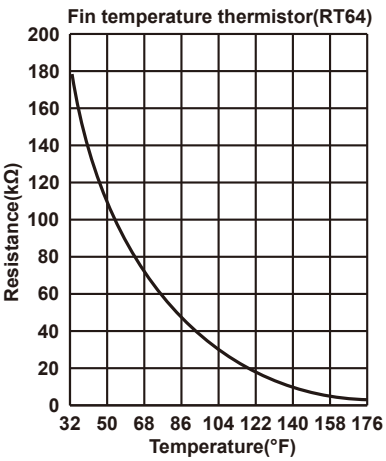

11 DISASSEMBLY INSTRUCTIONS

<Detaching method of the terminal with locking mechanism>

The terminal which has the locking mechanism can be detached as shown below.
There are 2 types of the terminal with locking mechanism.
The terminal without locking mechanism can be detached by pulling it out.
Check the shape of the terminal before detaching.

(1) Slide the sleeve and check if there is a locking lever or not.

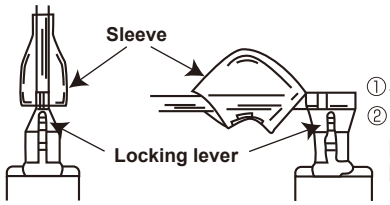

①Slide the sleeve.
②Pull the terminal while pushing the locking lever.

(2) The terminal with the connector shown below has the locking mechanism.

①Hold the sleeve, and pull out the terminal slowly.

11-1. MUZ-GE09NA / MUZ-GE09NA2 / MUZ-GE09NAH / MUZ-GE09NAH2 / MUY-GE09NA / MUY-GE09NA2 / MUZ-GE12NA / MUZ-GE12NA2 / MUZ-GE12NAH / MUZ-GE12NAH2 / MUY-GE12NA / MUY-GE12NA2 / MUZ-GE15NA / MUZ-GE15NA2 / MUZ-GE15NAH / MUZ-GE15NAH2 / MUY-GE15NA / MUY-GE15NA2

NOTE: Turn OFF power supply before disassembly.

→ : Indicates the visible parts in the photos/figures.
- - → : Indicates the invisible parts in the photos/figures.

OPERATING PROCEDURE	PHOTOS/FIGURES

1. Removing the cabinet

(1) Remove the screw fixing the service panel.
(2) Pull down the service panel and remove it.
(3) Remove the screws fixing the conduit cover.
(4) Remove the conduit cover.
(5) Disconnect the power supply wire and indoor/outdoor connecting wire.
(6) Remove the screws fixing the top panel.
(7) Remove the top panel.
(8) Remove the screws fixing the cabinet.
(9) Remove the cabinet.
(10) Remove the screws fixing the back panel.
(11) Remove the back panel.

Photo 1

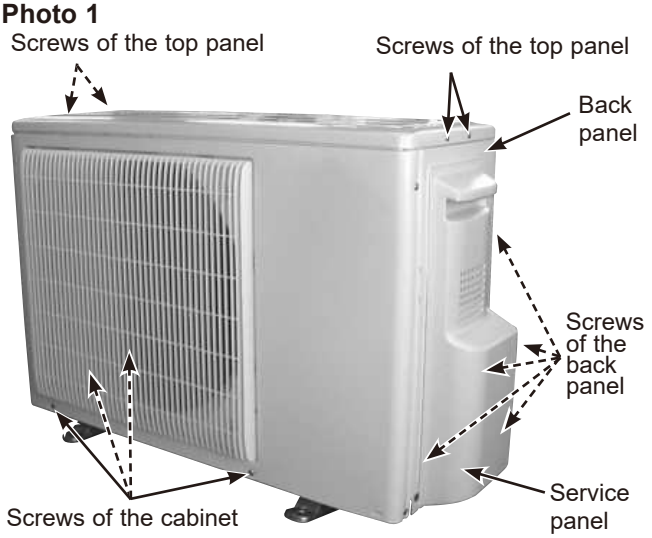

Photo 2

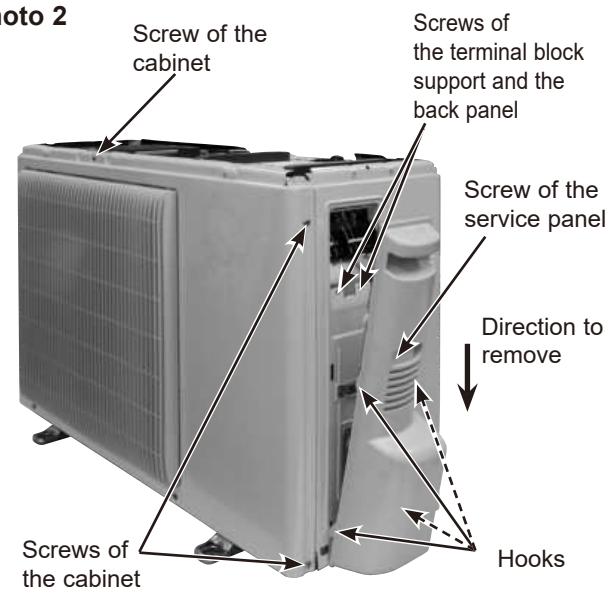

Photo 3

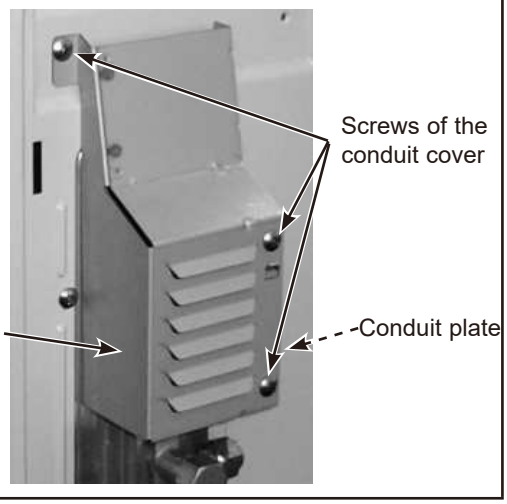

OPERATING PROCEDURE	PHOTOS/FIGURES
2. Removing the inverter assembly, inverter P.C. board (1) Remove the cabinet and panels. (Refer to section 1.) (2) Disconnect the lead wire to the reactor and the following connectors: <Inverter P.C. board> CN641 (Defrost thermistor **(MUZ)** and discharge temperature thermistor) CN643 (Ambient temperature thermistor) CN644 (Outdoor heat exchanger temperature thermistor) CN721 (R.V. coil) **(MUZ)** CN724 (LEV) CN931, CN932 (Fan motor) (3) Remove the compressor connector (CN61). (4) Remove the screws fixing the heat sink support and the separator. (5) Remove the fixing screws of the terminal block support and the back panel. (6) Remove the inverter assembly. (7) Remove the screw of the ground wire and screw of the terminal block support. (8) Remove the heat sink support from the P.C. board support. (9) Remove the screw of the inverter P.C. board and remove the inverter P.C. board from the P.C. board support.	**Photo 4** Screw of the heat sink support and the separator Screws of the terminal block support and the back panel 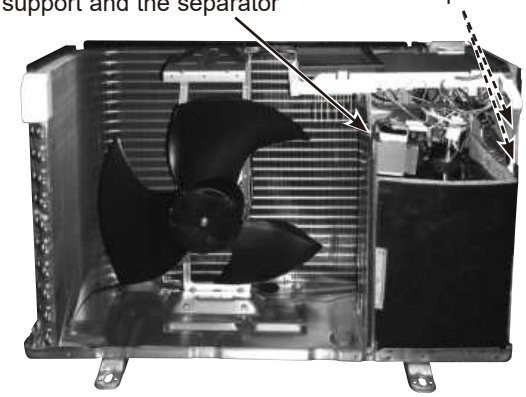 **Photo 5 (Inverter assembly)** 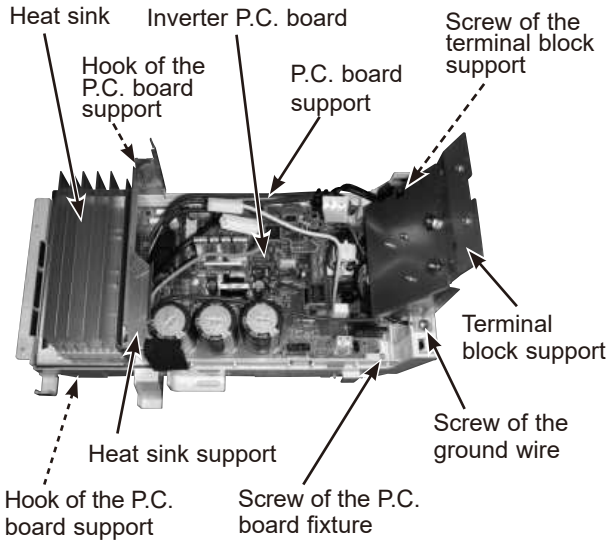
3. Removing R.V. coil (MUZ) (1) Remove the cabinet and panels. (Refer to section 1.) (2) Disconnect the following connectors: <Inverter P.C. board> CN721 (R.V. coil) (3) Remove the R.V. coil.	**Photo 6** R.V. coil **(MUZ)** Discharge temperature thermistor

OPERATING PROCEDURE	PHOTOS/FIGURES
4. Removing the discharge temperature thermistor, defrost thermistor, outdoor heat exchanger temperature thermistor and ambient temperature thermistor (1) Remove the cabinet and panels. (Refer to section 1.) (2) Disconnect the lead wire to the reactor and the following connectors: <Inverter P.C. board> CN641 (Defrost thermistor **(MUZ)** and discharge temperature thermistor) CN643 (Ambient temperature thermistor) CN644 (Outdoor heat exchanger temperature thermistor) (3) Pull out the discharge temperature thermistor from its holder. (Photo 6) (4) Pull out the defrost thermistor from its holder. (5) Pull out the outdoor heat exchanger temperature thermistor from its holder. (6) Pull out the ambient temperature thermistor from its holder.	**Photo 7** 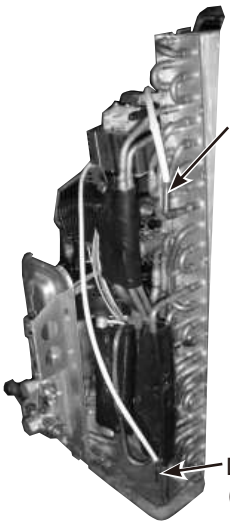 Outdoor heat exchanger temperature thermistor Defrost thermistor **(MUZ)**
5. Removing outdoor fan motor (1) Remove the cabinet and panels. (Refer to section 1.) (2) Disconnect the following connectors: <Inverter P.C. board> CN931, CN932 (Fan motor) (3) Remove the propeller nut. (4) Remove the propeller. (5) Remove the screws fixing the fan motor. (6) Remove the fan motor.	**Photo 8** Screws of the outdoor fan motor 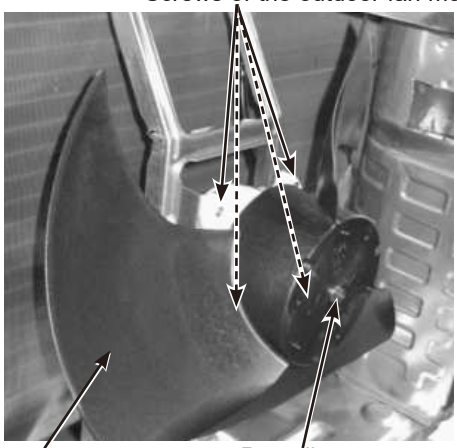 Propeller Propeller nut
6. Removing the compressor and 4-way valve (1) Remove the cabinet and panels. (Refer to section 1.) (2) Remove the inverter assembly. (Refer to section 2.) (3) Recover gas from the refrigerant circuit. **NOTE:** Recover gas from the pipes until the pressure gauge shows 0 PSIG. (4) Detach the brazed part of the suction and the discharge pipes connected with compressor. (5) Remove the compressor nuts. (6) Remove the compressor. (7) Detach the brazed part of the pipes connected with 4-way valve.	**Photo 9** 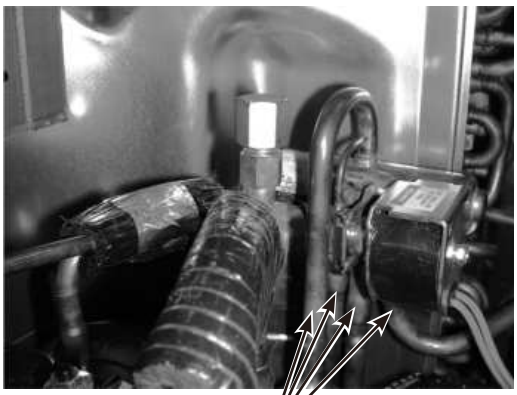 Brazed parts of 4-way valve

11-2. MUZ-GE18NA
MUZ-GE18NAH
MUY-GE18NA

NOTE: Turn OFF power supply before disassembly.

OPERATING PROCEDURE	PHOTOS/FIGURES
1. Removing the cabinet (1) Remove the screws of the service panel. (2) Remove the screws of the top panel. (3) Remove the screw of the valve cover. (4) Remove the service panel. (5) Remove the top panel. (6) Remove the valve cover. (7) Disconnect the power supply and indoor/outdoor connecting wire. (8) Remove the screws of the cabinet. (9) Remove the cabinet. (10) Remove the screws of the back panel. (11) Remove the back panel.	**Photo 1** 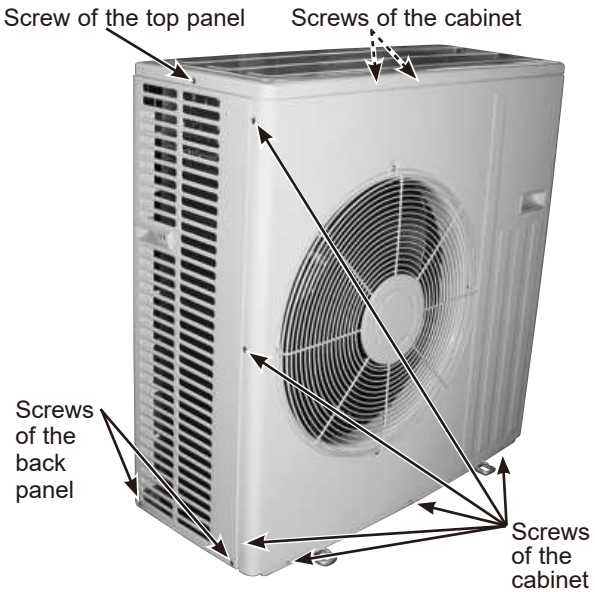 **Photo 2** 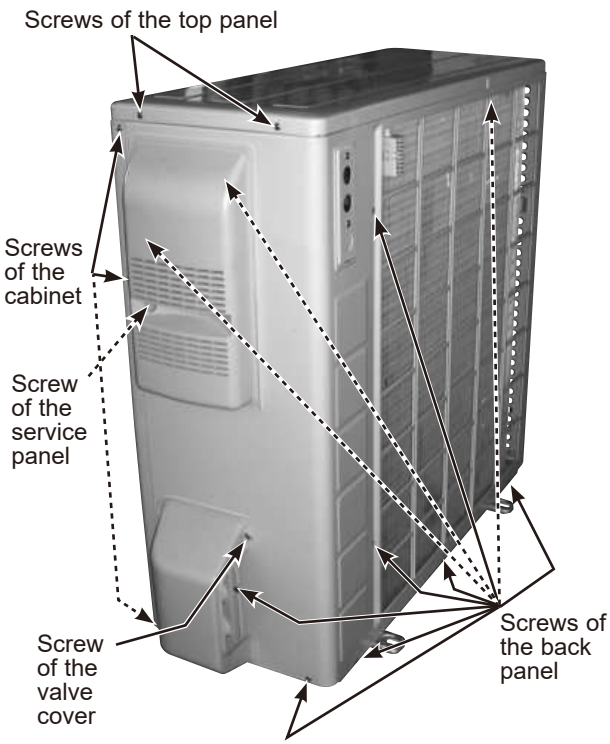

OPERATING PROCEDURE	PHOTOS/FIGURES
2. Removing the inverter assembly, inverter P.C. board (1) Remove the cabinet and panels. (Refer to section 1.) (2) Disconnect the lead wire to the reactor and the following connectors: <Inverter P.C. board> CN641 (Defrost thermistor **(MUZ)** and discharge temperature thermistor) CN643 (Ambient temperature thermistor) CN644 (Outdoor heat exchanger temperature thermistor) CN721 (R.V.coil) **(MUZ)** CN724 (LEV) CN931, CN932 (Fan motor) (3) Remove the compressor connector (CN61). (4) Remove the screws fixing the heat sink support and the separator. (5) Remove the fixing screws of the terminal block support and the back panel. (6) Remove the inverter assembly. (7) Remove the screw of the ground wire and screw of the terminal block support. (8) Remove the heat sink support from the P.C. board support. (9) Remove the screw of the inverter P.C. board and remove the inverter P.C. board from the P.C. board support.	**Photo 3** 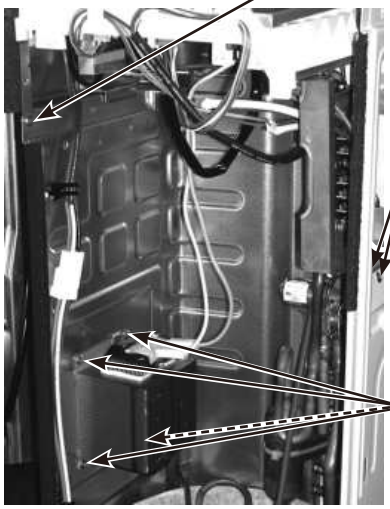 **Photo 4 (Inverter assembly)** 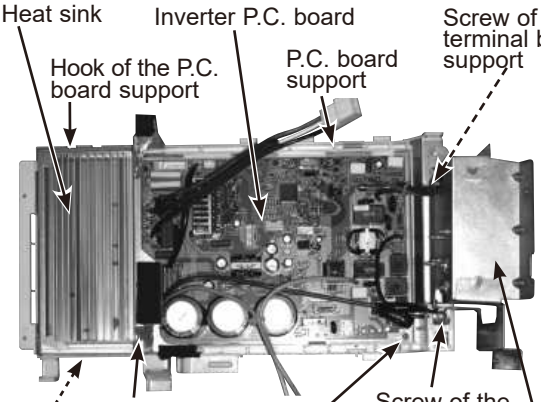
3. Removing R.V. coil (1) Remove the cabinet and panels. (Refer to section 1.) (2) Disconnect the following connectors: <Inverter P.C. board> CN721 (R.V. coil) **(MUZ)** (3) Remove the R.V. coil.	**Photo 5** 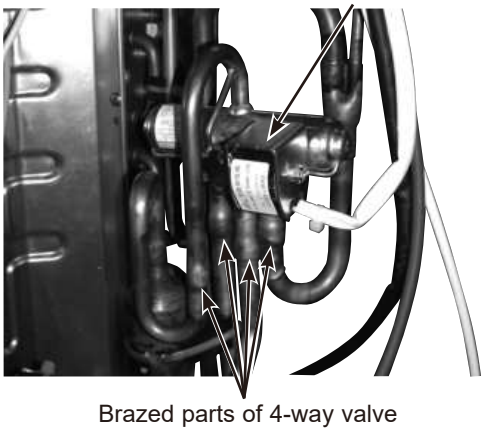

OPERATING PROCEDURE	PHOTOS/FIGURES

4. Removing the discharge temperature thermistor, defrost thermistor, outdoor heat exchanger temperature thermistor and ambient temperature thermistor

(1) Remove the cabinet and panels. (Refer to section 1.)
(2) Disconnect the lead wire to the reactor and the following connectors:
<Inverter P.C. board>
CN641 (Defrost thermistor **(MUZ)** and discharge temperature thermistor)
CN643 (Ambient temperature thermistor)
CN644 (Outdoor heat exchanger temperature thermistor)
(3) Pull out the discharge temperature thermistor from its holder.
(4) Pull out the defrost thermistor from its holder.
(5) Pull out the outdoor heat exchanger temperature thermistor from its holder.
(6) Pull out the ambient temperature thermistor from its holder.

Photo 6

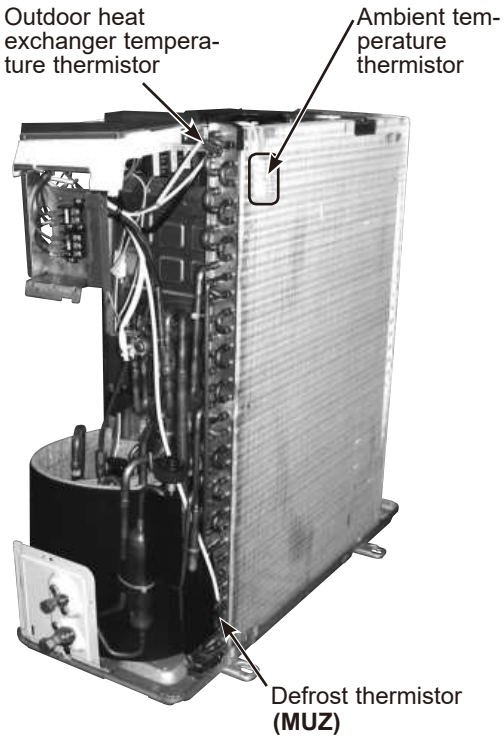

5. Removing outdoor fan motor

(1) Remove the top panel, cabinet and service panel. (Refer to section 1.)
(2) Disconnect the following connectors:
<Inverter P.C. board>
CN931 and CN932 (Fan motor)
(3) Remove the propeller.
(4) Remove the screws fixing the fan motor.
(5) Remove the fan motor.

Photo 7

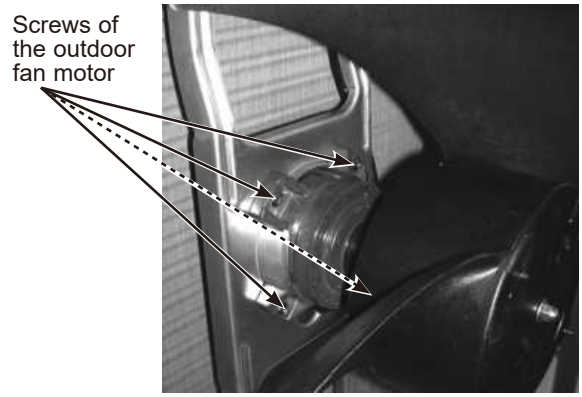

6. Removing the compressor and 4-way valve

(1) Remove the top panel, cabinet and service panel. (Refer to section 1.)
(2) Remove the back panel. (Refer to section 1.)
(3) Remove the inverter assembly. (Refer to section 2.)
(4) Recover gas from the refrigerant circuit.
NOTE: Recover gas from the pipes until the pressure gauge shows 0 PSIG.
(5) Detach the brazed part of the suction and the discharge pipes connected with compressor.
(6) Remove the compressor nuts.
(7) Remove the compressor.
(8) Detach the brazed parts of 4-way valve and pipes. (Photo 5)
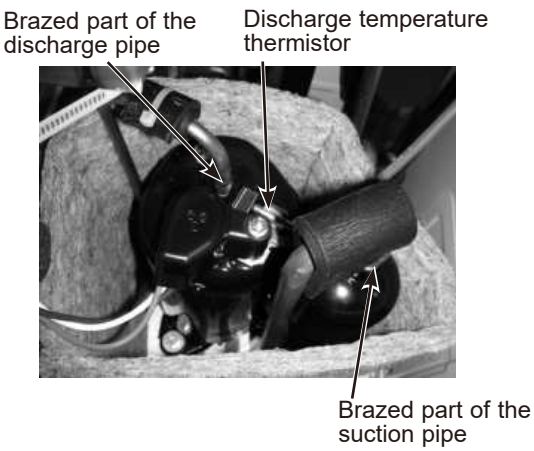
Photo 8