MITSUBISHI ELECTRIC

SPLIT-TYPE AIR CONDITIONERS

Revision J:
- A warning when opening or closing the valve has been added.

OBH733 REVISED EDITION-H is void.

OUTDOOR UNIT

HFC utilized R410A

No. OBH733
REVISED EDITION-J

SERVICE MANUAL

Models

MUZ-GL09NA · U1, U2, U8	MUZ-GL09NAH · U1, U2, U8	MUY-GL09NA · U1, U2
MUZ-GL12NA · U1, U2	MUZ-GL12NAH · U1, U2	MUY-GL12NA · U1, U2
MUZ-GL15NA · U1, U2	MUZ-GL15NAH · U1, U2	MUY-GL15NA · U1, U2
MUZ-GL18NA · U1	MUZ-GL18NAH · U1	MUY-GL18NA · U1
MUZ-GL24NA · U1, U2	MUZ-GL24NAH · U1	MUY-GL24NA · U1

Indoor unit service manual
MSZ-GL•NA, MSY-GL•NA Series (OBH732)

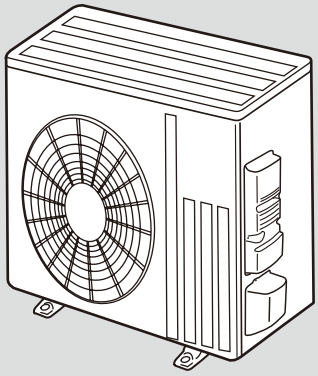

MUZ-GL18/24NA
MUZ-GL18/24NAH
MUY-GL18/24NA

CONTENTS

1. TECHNICAL CHANGES ····· 3
2. PART NAMES AND FUNCTIONS ····· 3
3. SPECIFICATION ····· 4
4. OUTLINES AND DIMENSIONS ····· 7
5. WIRING DIAGRAM ····· 9
6. REFRIGERANT SYSTEM DIAGRAM ····· 21
7. DATA ····· 24
8. ACTUATOR CONTROL ····· 39
9. SERVICE FUNCTIONS ····· 40
10. TROUBLESHOOTING ····· 41
11. DISASSEMBLY INSTRUCTIONS ····· 65

PARTS CATALOG (OBB733)

Use the specified refrigerant only

Never use any refrigerant other than that specified.
Doing so may cause a burst, an explosion, or fire when the unit is being used, serviced, or disposed of.
Correct refrigerant is specified in the manuals and on the spec labels provided with our products.
We will not be held responsible for mechanical failure, system malfunction, unit breakdown or accidents caused by failure to follow the instructions.

<Preparation before the repair service>
- Prepare the proper tools.
- Prepare the proper protectors.
- Provide adequate ventilation.
- After stopping the operation of the air conditioner, turn off the power-supply breaker and pull the power plug.
- Discharge the capacitor before the work involving the electric parts.

<Precautions during the repair service>
- Do not perform the work involving the electric parts with wet hands.
- Do not pour water into the electric parts.
- Do not touch the refrigerant.
- Do not touch the hot or cold areas in the refrigeration cycle.
- When the repair or the inspection of the circuit needs to be done without turning off the power, exercise great caution not to touch the live parts.

⚠ WARNING

- **When the refrigeration circuit has a leak, do not execute pump down with the compressor.**
- **When pumping down the refrigerant, stop the compressor before disconnecting the refrigerant pipes. The compressor may burst if air etc. get into it.**
- **When opening or closing the valve below freezing temperatures, refrigerant may spurt out from the gap between the valve stem and the valve body, resulting in injuries.**

Revision A:
• MUZ-GL12/15NA-U1, MUZ-GL12/15NAH-U1 and MUY-GL09/12/15NA-U1 have been added.

Revision B:
• MUZ-GL09NA-U8 and MUZ-GL09NAH-U8 have been added.

Revision C:
• MUZ-GL09NA-U1 and MUZ-GL09NAH-U1 have been added.

Revision D:
• MUZ-GL24NAH-U1 has been added.

Revision E:
• Capacity corrections have been corrected [7-1. 2), 3)].

Revision F:
• MUZ-GL24NA-U2 has been added.

Revision G:
• MUZ-GL09/12/15NA-U2, MUZ-GL09/12/15NAH-U2 and MUY-GL09/12/15NA-U2 have been added.

Revision H:
• 10-6. Voltage values of MUZ-GL09/12/15NA-U2, MUZ-GL09/12/15NAH-U2 and MUY-GL09/12/15NA-U2 have been corrected.

Revision J:
• A warning when opening or closing the valve has been added.

1 TECHNICAL CHANGES

MUZ-GL09NA - U1 **MUZ-GL09NAH** - U1 **MUY-GL09NA** - U1
MUZ-GL09NA - U8 **MUZ-GL09NAH** - U8
MUZ-GL12NA - U1 **MUZ-GL12NAH** - U1 **MUY-GL12NA** - U1
MUZ-GL15NA - U1 **MUZ-GL15NAH** - U1 **MUY-GL15NA** - U1
MUZ-GL18NA - U1 **MUZ-GL18NAH** - U1 **MUY-GL18NA** - U1
MUZ-GL24NA - U1, U2 **MUZ-GL24NAH** - U1 **MUY-GL24NA** - U1

1. New model

MUZ-GL09NA - U1 ➔ **MUZ-GL09NA** - U2
MUZ-GL09NAH - U1 ➔ **MUZ-GL09NAH** - U2

1. Fan motor has been changed.
2. INVERTER P.C.BOARD has been changed.
3. EXPANSION VALVE has been changed.
4. 4-WAY VALVE has been changed.
5. R.V. COIL has been changed.
6. Compressor has been changed.

MUY-GL09NA - U1 ➔ **MUY-GL09NA** - U2

1. Fan motor has been changed.
2. INVERTER P.C.BOARD has been changed.
3. EXPANSION VALVE has been changed.
4. 4-WAY VALVE has been changed.
5. Compressor has been changed.
6. Refrigerant charge has been changed.

MUZ-GL12NA - U1 ➔ **MUZ-GL12NA** - U2
MUZ-GL12NAH - U1 ➔ **MUZ-GL12NAH** - U2

1. Fan motor has been changed.
2. INVERTER P.C.BOARD has been changed.
3. EXPANSION VALVE has been changed.
4. 4-WAY VALVE has been changed.
5. R.V. COIL has been changed.

MUY-GL12NA - U1 ➔ **MUY-GL12NA** - U2

1. Fan motor has been changed.
2. INVERTER P.C.BOARD has been changed.
3. EXPANSION VALVE has been changed.
4. 4-WAY VALVE has been changed.

MUZ-GL15NA - U1 ➔ **MUZ-GL15NA** - U2
MUZ-GL15NAH - U1 ➔ **MUZ-GL15NAH** - U2
MUY-GL15NA - U1 ➔ **MUY-GL15NA** - U2

1. Fan motor has been changed.
2. INVERTER P.C.BOARD has been changed.
3. EXPANSION VALVE has been changed.

2 PART NAMES AND FUNCTIONS

MUZ-GL09NA MUZ-GL09NAH MUY-GL09NA
MUZ-GL12NA MUZ-GL12NAH MUY-GL12NA
MUZ-GL15NA MUZ-GL15NAH MUY-GL15NA

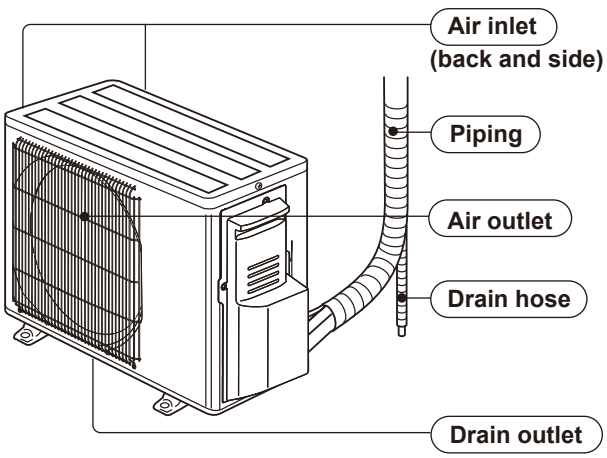

MUZ-GL18NA MUZ-GL18NAH MUY-GL18NA
MUZ-GL24NA MUZ-GL24NAH MUY-GL24NA

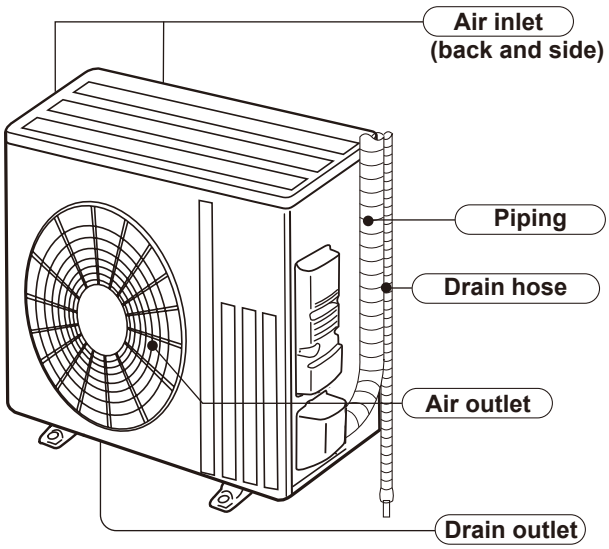

3 SPECIFICATION

Outdoor unit model			MUZ-			MUY-		MUZ-	MUY-
			GL09NA- U1 GL09NAH- U1	GL09NA- U2 GL09NAH- U2	GL09NA- U8 GL09NAH- U8	GL09NA- U1	GL09NA- U2	GL12NA GL12NAH	GL12NA
Capacity Rated (Minimum~Maximum)	Cooling *1	Btu/h	9,000 (3,600 - 12,200)					12,000 (1,500 - 13,600)	
	Heating 47 *1 (**MUZ**)	Btu/h	10,900 (4,500 - 15,900)		10,900 (4,500 - 14,100)	–		14,400 (2,000 - 18,100)	–
Capacity Rated (Maximum)	Heating 17 *2 (**MUZ**)	Btu/h	6,700 (10,200)		7,000 (9,400)	–		9,200 (12,000)	–
Power consumption Rated (Minimum~Maximum)	Cooling *1	W	585 (240 - 1,050)					920 (100 - 1,300)	
	Heating 47 *1 (**MUZ**)	W	720 (230 - 1,250)		720 (230 - 1,070)	–		1,100 (110 - 1,620)	–
Power consumption Rated (Maximum)	Heating 17 *2 (**MUZ**)	W	630 (1,060)		620 (790)	–		870 (1,240)	–
EER *1 [SEER] *3	Cooling		15.4 [24.6]					13.0 [23.1]	
HSPF IV *4	Heating (**MUZ**)		**NA:** 12.8			–		**NA:** 12.5	–
			NAH: 11.8			–		**NAH:** 11.5	–
COP	Heating *1 (**MUZ**)		4.44			–		3.84	–
Power factor	Cooling (208/230)	%	86/86		92/92	87/87	86/86	95/95	
	Heating (**MUZ**) (208/230)	%	90/90		95/95	–		96/96	
Power supply	V , phase , Hz		208/230, 1 , 60						
Max. fuse size (time delay)		A	15						
Min. circuit ampacity		A	9			7		9	7
Fan motor	F.L.A	A	0.50						
Compressor	Model		KNB073FRVMC	KNB073FRXMC	SNB092FQAMT	KNB073FRVMC	KNB073FRXMC	SNB092FQAMT	
	R.L.A	A	6.2			4.9		6.6	4.9
	L.R.A	A	7.7			6.1		8.2	6.1
	Refrigeration oil	fl oz. (L) (Model)	9.1 (0.27)/(FV50S)		11.8 (0.35)/(FV50S)	9.1 (0.27)/(FV50S)		11.8 (0.35)/(FV50S)	
Refrigerant control			Linear expansion valve						
Sound level *1	Cooling	dB(A)	48					49	49
	Heating (**MUZ**)	dB(A)	50			–		51	–
Airflow High - Med. - Low	Cooling	CFM	1,102 - 639						
	Heating (**MUZ**)	CFM	1,186 - 1,116 - 1,045			–		1,186 - 1,116 - 1,045	–
Fan speed High - Med. - Low	Cooling	rpm	810 - 490						
	Heating (**MUZ**)	rpm	870 - 820 - 770			–		870 - 820 - 770	–
Defrost method			Reverse cycle			–		Reverse cycle	–
Dimensions	W	in.	31-1/2						
	D	in.	11-1/4						
	H	in.	21-5/8						
Weight		lb.	81						
External finish			Munsell 3Y 7.8/1.1						
Remote controller			Wireless type						
Control voltage (by built-in transformer)		V DC	12 - 24						
Refrigerant piping			Not supplied						
Refrigerant pipe size (Min. wall thickness)	Liquid	in.	1/4 (0.0315)						
	Gas	in.	3/8 (0.0315)						
Connection method	Indoor		Flared						
	Outdoor		Flared						
Between the indoor & outdoor units	Height difference	ft.	40						
	Piping length	ft.	65						
Refrigerant charge (R410A)			2 lb. 5 oz.		2 lb. 9 oz.	2 lb. 9 oz.	2 lb. 5 oz.	2 lb. 9 oz.	

NOTE: Test conditions are based on AHRI 210/240.

*1: Rating conditions (Cooling) — Indoor: 80˚FDB, 67˚FWB, Outdoor: 95˚FDB, (75˚FWB)
(Heating) — Indoor: 70˚FDB, 60˚FWB, Outdoor: 47˚FDB, 43˚FWB

*2: Rating conditions (Heating) — Indoor: 70˚FDB, 60˚FWB, Outdoor: 17˚FDB, 15˚FWB

*3: Test condition (Refer to page 6.)

*4: Test condition (Refer to page 6.)

Outdoor unit model			MUZ-GL15NA GL15NAH	MUY-GL15NA	MUZ-GL18NA GL18NAH	MUY-GL18NA	MUZ-GL24NA GL24NAH	MUY-GL24NA
Capacity Rated (Minimum~Maximum)	Cooling *1	Btu/h	14,000 (3,100 - 18,200)		18,000 (5,800 ~ 22,000)		22,500 (8,200 ~ 31,400)	
	Heating 47 *1 (**MUZ**)	Btu/h	18,000 (4,800 - 20,900)	-	21,600 (5,400 ~ 25,000)	-	27,600 (7,500 ~ 36,900)	–
Capacity Rated (Maximum)	Heating 17 *2 (**MUZ**)	Btu/h	12,200 (16,400)	-	13,800 (18,200)	-	16,000 (24,600)	–
Power consumption Rated (Minimum~Maximum)	Cooling *1	W	1,080 (210 - 2,000)		1,340 (330 ~ 2,150)		1,800 (570 ~ 3,580)	
	Heating 47 *1 (**MUZ**)	W	1,600 (200 ~ 2,010)	–	1,680 (320 ~ 2,500)		2,340 (520 ~ 3,650)	
Power consumption Rated (Maximum)	Heating 17 *2 (**MUZ**)	W	1,190 (1,850)	–	1,480 (2,150)	–	1,770 (3,290)	–
EER *1 [SEER] *3	Cooling		13.0 [21.6]		13.4 [20.5]		12.5 [20.5]	
HSPF IV *4	Heating (**MUZ**)		**NA:** 11.7	–	**NA:** 11.2	–	**NA:** 10.0	–
			NAH: 10.8	–	**NAH:** 10.2	–	**NAH:** 10.0	–
COP	Heating *1 (**MUZ**)		3.30	–	3.77	–	3.46	–
Power factor	Cooling (208/230)	%	97/97		99/99		99/99	
	Heating (**MUZ**) (208/230)	%	98/98		99/99	–	99/99	–
Power supply	V , phase , Hz		208/230, 1 , 60					
Max. fuse size (time delay)		A	15				20	
Min. circuit ampacity		A	10	9	14		17.1	
Fan motor		F.L.A	0.50		0.93		0.93	
Compressor	Model		SNB130FQBMT		SNB130FQBMT		SNB172FQKMT	
	R.L.A	A	7.4	6.8	10		12.9	
	L.R.A	A	9.3	8.5	12.5		16.1	
	Refrigeration oil	fl oz. (L) (Model)	11.8 (0.35)/(FV50S)		11.8 (0.35)/(FV50S)	11.8 (0.35)/(FV50S)	13.5 (0.40)/(FV50S)	
Refrigerant control			Linear expansion valve					
Sound level *1	Cooling	dB(A)	49	49	54		55	
	Heating (**MUZ**)	dB(A)	51	–	55	–	55	–
Airflow High - Med. - Low	COOL	CFM	1,102-639		1,742 - 922		2,016 - 1,769 - 890	
	HEAT	CFM	1,186 - 1,045 - 1,045	–	1,691 - 1,691 - 1,372	–	1,701 - 1,701 - 1,341	–
Fan speed High - Med. - Low	Cooling	rpm	810 - 490		840 - 450		950 - 840 - 450	
	Heating (**MUZ**)	rpm	870 - 770 - 770	–	810 - 810 - 650	–	810 - 810 - 650	–
Defrost method			Reverse cycle	–	Reverse cycle	–	Reverse cycle	–
Dimensions	W	in.	31-1/2		33-1/16			
	D	in.	11-1/4		13			
	H	in.	21-5/8		34-5/8			
Weight		lb.	81		121		119	
External finish			Munsell 3Y 7.8/1.1					
Remote controller			Wireless type					
Control voltage (by built-in transformer)		V DC	12 - 24					
Refrigerant piping			Not supplied					
Refrigerant pipe size (Min. wall thickness)	Liquid	in.	1/4 (0.0315)				3/8 (0.0315)	
	Gas	in.	1/2 (0.0315)				5/8 (0.0315)	
Connection method	Indoor		Flared					
	Outdoor		Flared					
Between the indoor & outdoor units	Height difference	ft.	40		50			
	Piping length	ft.	65		100			
Refrigerant charge (R410A)			2 lb. 9 oz.		3 lb. 9 oz.		4 lb. 3 oz.	

NOTE: Test conditions are based on AHRI 210/240.

*1: Rating conditions (Cooling) — Indoor: 80˚FDB, 67˚FWB, Outdoor: 95˚FDB, (75˚FWB)
(Heating) — Indoor: 70˚FDB, 60˚FWB, Outdoor: 47˚FDB, 43˚FWB

*2: Rating conditions (Heating) — Indoor: 70˚FDB, 60˚FWB, Outdoor: 17˚FDB, 15˚FWB

*3: Test condition (Refer to page 6.)

*4: Test condition (Refer to page 6.)

Test condition

*3, *4

ARI	Mode	Test	Indoor air condition (°F)		Outdoor air condition (°F)	
			Dry bulb	Wet bulb	Dry bulb	Wet bulb
	SEER (Cooling)	"A-2" Cooling Steady State at rated compressor Speed	80	67	95	(75)
		"B-2" Cooling Steady State at rated compressor Speed	80	67	82	(65)
		"B-1" Cooling Steady State at minimum compressor Speed	80	67	82	(65)
		"F-1" Cooling Steady State at minimum compressor Speed	80	67	67	(53.5)
		"E-V" Cooling Steady State at intermediate compressor Speed *5	80	67	87	(69)
	HSPF (Heating)	"H1-2" Heating Steady State at rated compressor Speed	70	60	47	43
		"H3-2" Heating at rated compressor Speed	70	60	17	15
		"H0-1" Heating Steady State at minimum compressor Speed	70	60	62	56.5
		"H1-1" Heating Steady State at minimum compressor Speed	70	60	47	43
		"H2-V" Heating at intermediate compressor Speed *5	70	60	35	33

NOTE:
*5: At intermediate compressor Speed
= ("Rated compressor speed" - "minimum compressor speed") / 3 + "minimum compressor speed".

OPERATING RANGE

(1) POWER SUPPLY

	Rated voltage	Guaranteed voltage (V)
Outdoor unit	208/230 V 1 phase 60 Hz	Min. 187 — 208 — 230 — Max. 253

(2) OPERATION

Mode	Condition	Intake air temperature (°F)			
		Indoor		Outdoor	
		DB	WB	DB	WB
Cooling	Standard temperature	80	67	95	—
	Maximum temperature	90	73	115	—
	Minimum temperature	67	57	14	—
	Maximum humidity	78 %		—	
Heating	Standard temperature	70	60	47	43
	Maximum temperature	80	67	75	65
	Minimum temperature	70	60	-4	-5

4 OUTLINES AND DIMENSIONS

MUZ-GL09NA MUZ-GL09NAH MUY-GL09NA
MUZ-GL12NA MUZ-GL12NAH MUY-GL12NA
MUZ-GL15NA MUZ-GL15NAH MUY-GL15NA

Unit: inch

REQUIRED SPACE

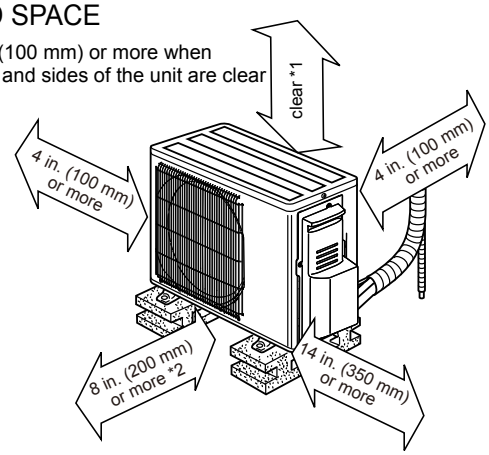

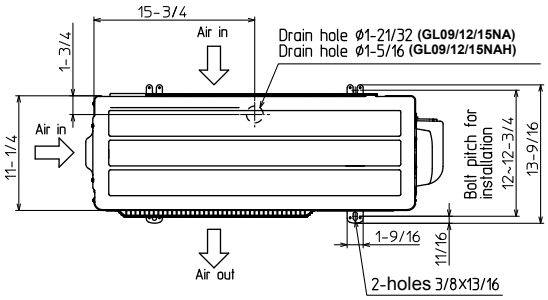

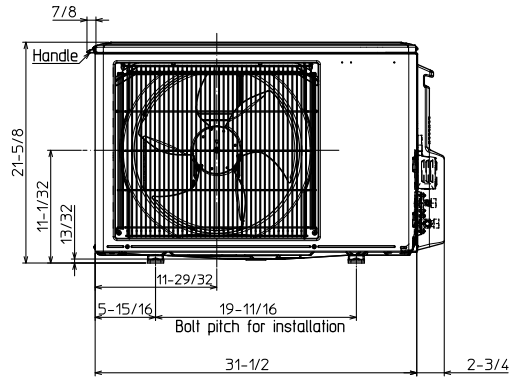

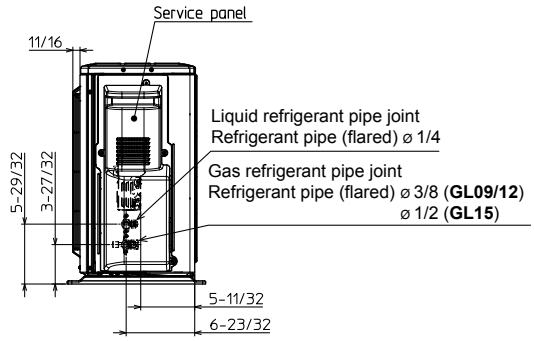

MUZ-GL18NA MUZ-GL18NAH MUY-GL18NA
MUZ-GL24NA MUZ-GL24NAH MUY-GL24NA

Unit: inch

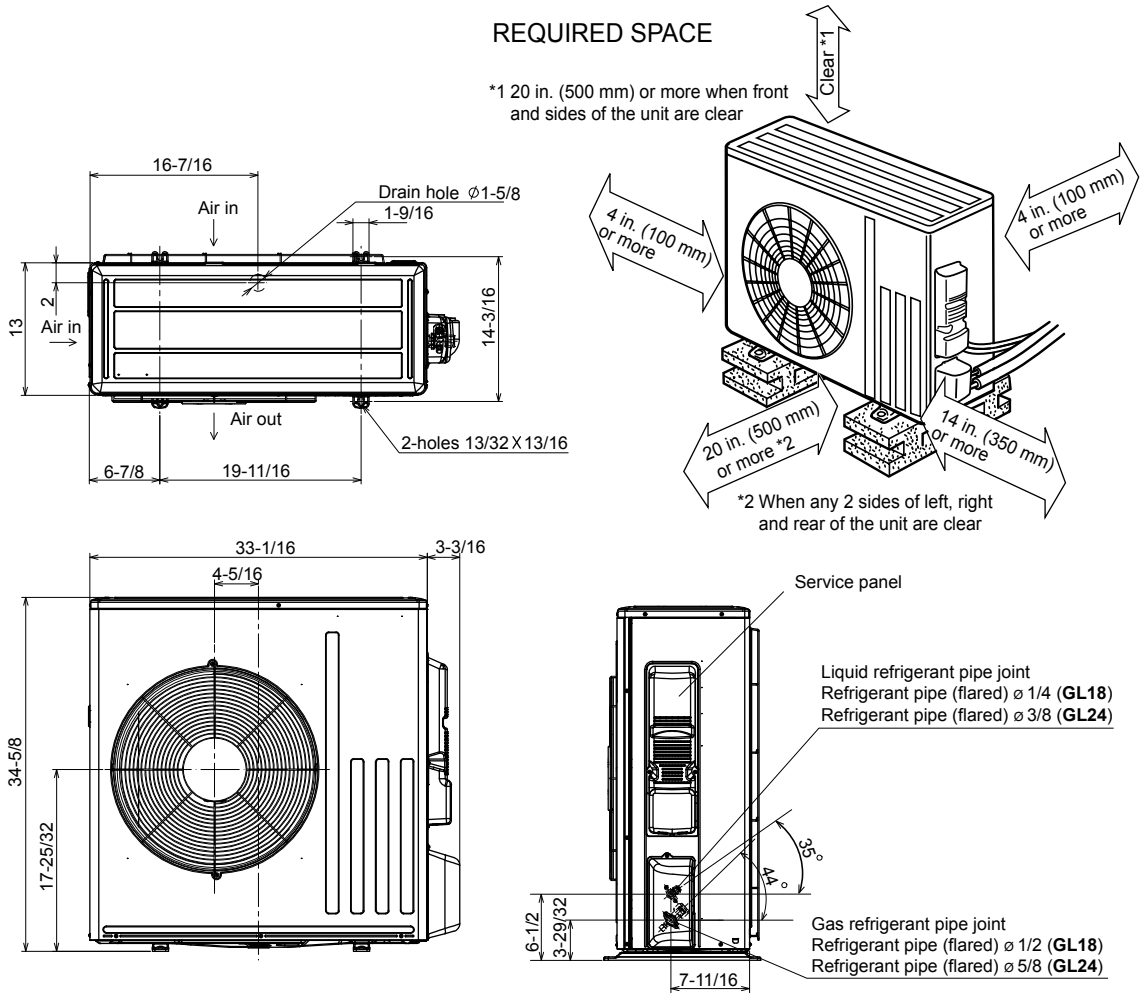

5 WIRING DIAGRAM

MUZ-GL09NA-U1, U8 MUZ-GL12NA-U1

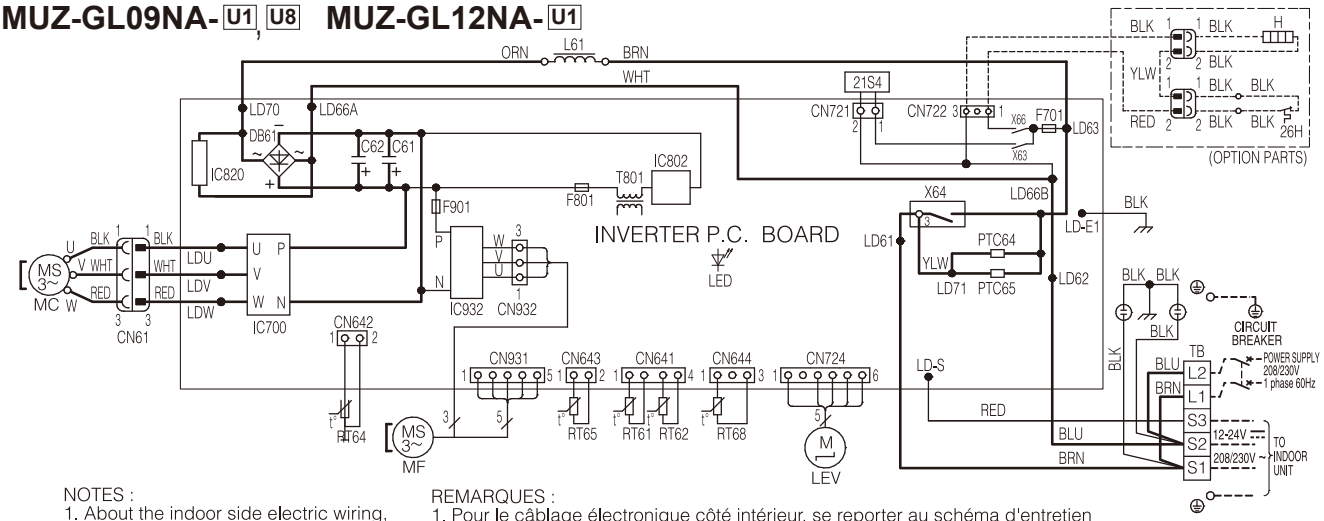

NOTES :
1. About the indoor side electric wiring, refer to the indoor unit electric wiring diagram for servicing.
2. Use copper supply wires.
3. Symbols indicate, ▭▭▭▭ :Terminal block
   ○○○○○ :Connector

REMARQUES :
1. Pour le câblage électronique côté intérieur, se reporter au schéma d'entretien du câblage électronique de l'appareil intérieur.
2. Utiliser des fils d'alimentation en cuivre.
3. Les symboles ont les ▭▭▭▭ :Borne
   significations suivantes, ○○○○○ :Connecteur

SYMBOL	NAME	SYMBOL	NAME	SYMBOL	NAME
C61,C62	SMOOTHING CAPACITOR	L61	REACTOR	RT68	OUTDOOR HEAT EXCHANGER TEMP. THERMISTOR
DB61	DIODE MODULE	MC	COMPRESSOR		
F701,F801,F901	FUSE (T3. 15AL250V)	MF	FAN MOTOR	TB	TERMINAL BLOCK
H	DEFROST HEATER(OPTION PARTS)	PTC64, PTC65	CIRCUIT PROTECTION	T801	TRANSFORMER
IC700,IC820,IC932	POWER MODULE	RT61	DEFROST THERMISTOR	X63, X64, X66	RELAY
IC802	POWER DEVICE	RT62	DISCHARGE TEMP. THERMISTOR	21S4	REVERSING VALVE COIL
LED	LED	RT64	FIN TEMP. THERMISTOR	26H	HEATER PROTECTOR(OPTION PARTS)
LEV	EXPANSION VALVE COIL	RT65	AMBIENT TEMP. THERMISTOR		

MUZ-GL09NA-U2 MUZ-GL12NA-U2

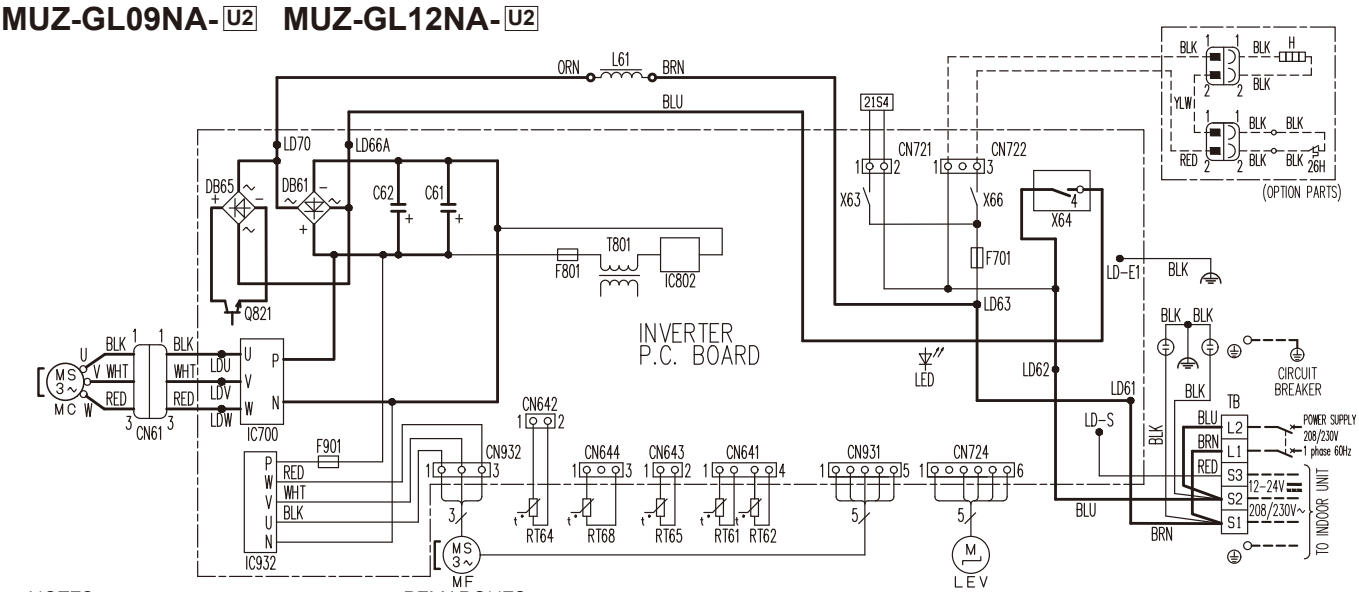

NOTES :
1. About the indoor side electric wiring, refer to the indoor unit electric wiring diagram for servicing.
2. Use copper supply wires.
3. Symbols indicate, ▭▭▭ :Terminal block
   ○○○ :Connector

REMARQUES :
1. Pour le câblage électronique côté intérieur, se reporter au schéma d'entretien du câblage électronique de l'appareil intérieur.
2. Utiliser des fils d'alimentation en cuivre.
3. Les symboles ont les ▭▭▭ :Borne
   significations suivantes, ○○○ :Connecteur

SYMBOL	NAME	SYMBOL	NAME	SYMBOL	NAME
CN61	CONNECTOR	LEV	EXPANSION VALVE COIL	RT65	AMBIENT TEMP. THERMISTOR
C61,C62	SMOOTHING CAPACITOR	L61	REACTOR	RT68	OUTDOOR HEAT EXCHANGER TEMP. THERMISTOR
DB61,DB65	DIODE MODULE	MC	COMPRESSOR		
F701,F801,F901	FUSE (T3. 15AL250V)	MF	FAN MOTOR	TB	TERMINAL BLOCK
H	DEFROST HEATER (OPTION PARTS)	Q821	SWITCHING POWER TRANSISTOR	T801	TRANSFORMER
IC700,IC932	POWER MODULE	RT61	DEFROST THERMISTOR	X63, X64, X66	RELAY
IC802	POWER DEVICE	RT62	DISCHARGE TEMP. THERMISTOR	21S4	REVERSING VALVE COIL
LED	LED	RT64	FIN TEMP. THERMISTOR	26H	HEATER PROTECTOR (OPTION PARTS)

MUZ-GL09NAH-U1, U8 MUZ-GL12NAH-U1

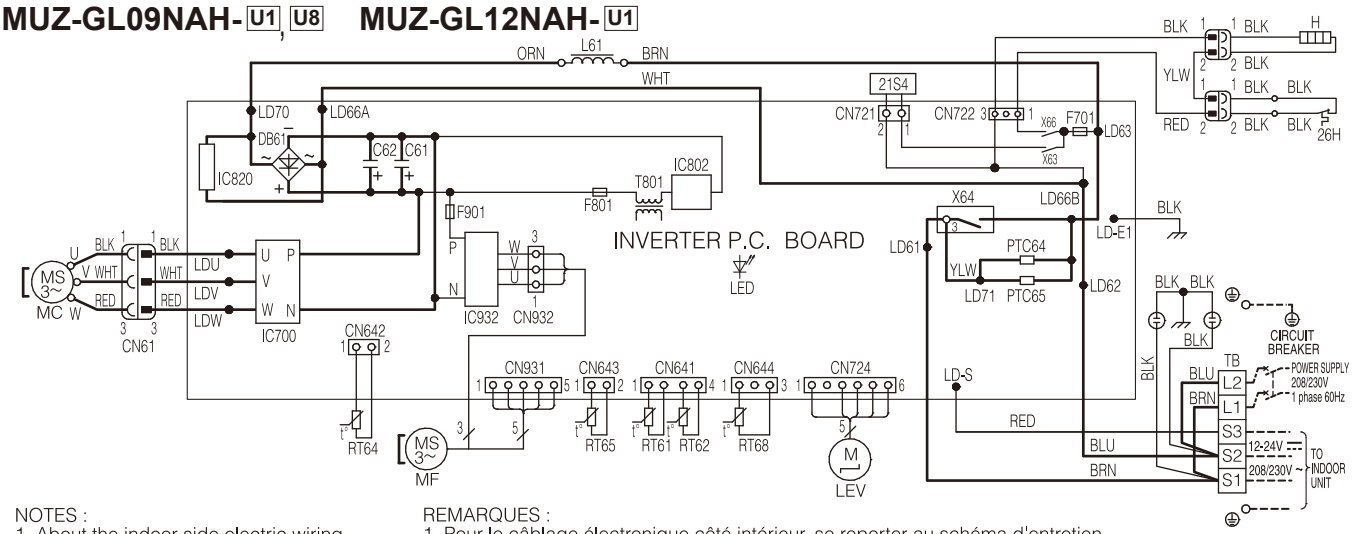

NOTES :
1. About the indoor side electric wiring, refer to the indoor unit electric wiring diagram for servicing.
2. Use copper supply wires.
3. Symbols indicate, ▭▭▭▭ :Terminal block
   ⊙⊙⊙⊙⊙ :Connector

REMARQUES :
1. Pour le câblage électronique côté intérieur, se reporter au schéma d'entretien du câblage électronique de l'appareil intérieur.
2. Utiliser des fils d'alimentation en cuivre.
3. Les symboles ont les ▭▭▭▭ :Borne
   significations suivantes, ⊙⊙⊙⊙⊙ :Connecteur

SYMBOL	NAME	SYMBOL	NAME	SYMBOL	NAME
C61,C62	SMOOTHING CAPACITOR	L61	REACTOR	RT68	OUTDOOR HEAT EXCHANGER TEMP. THERMISTOR
DB61	DIODE MODULE	MC	COMPRESSOR		
F701,F801,F901	FUSE (T3. 15AL250V)	MF	FAN MOTOR	TB	TERMINAL BLOCK
H	DEFROST HEATER	PTC64, PTC65	CIRCUIT PROTECTION	T801	TRANSFORMER
IC700,IC820,IC932	POWER MODULE	RT61	DEFROST THERMISTOR	X63, X64, X66	RELAY
IC802	POWER DEVICE	RT62	DISCHARGE TEMP. THERMISTOR	21S4	REVERSING VALVE COIL
LED	LED	RT64	FIN TEMP. THERMISTOR	26H	HEATER PROTECTOR
LEV	EXPANSION VALVE COIL	RT65	AMBIENT TEMP. THERMISTOR		

MUZ-GL09NAH-U2 MUZ-GL12NAH-U2

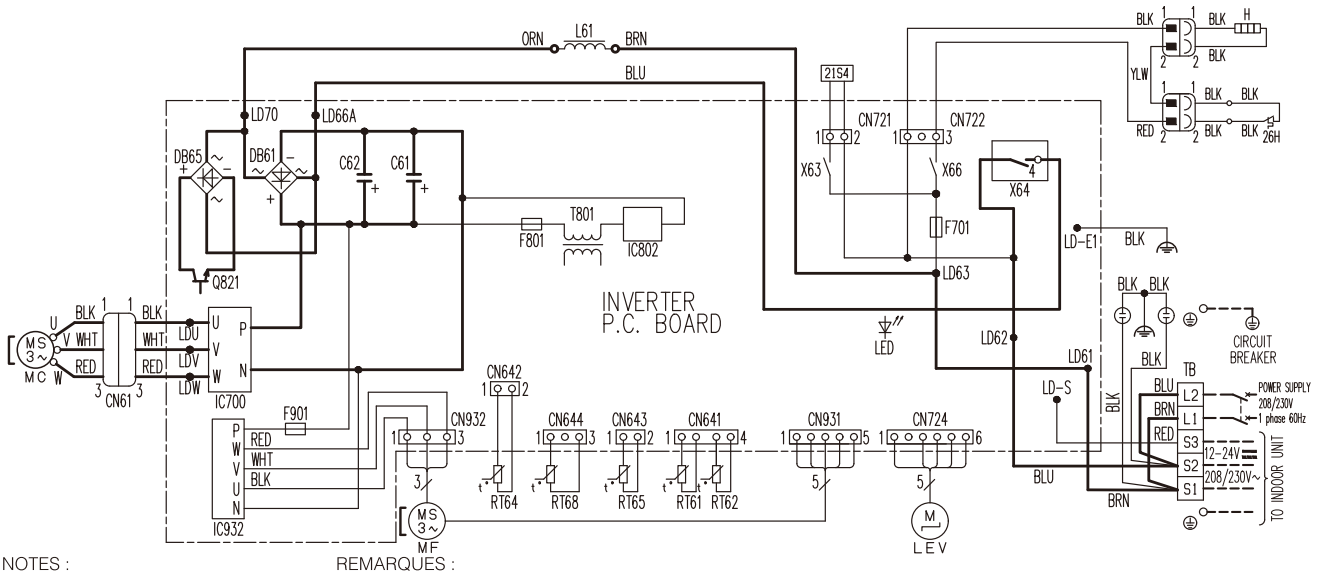

NOTES :
1. About the indoor side electric wiring, refer to the indoor unit electric wiring diagram for servicing.
2. Use copper supply wires.
3. Symbols indicate, ▭▭▭ :Terminal block
   ⊙⊙⊙ :Connector

REMARQUES :
1. Pour le câblage électronique côté intérieur, se reporter au schéma d'entretien du câblage électronique de l'appareil intérieur.
2. Utiliser des fils d'alimentation en cuivre.
3. Les symboles ont les ▭▭▭ :Borne
   significations suivantes, ⊙⊙⊙ :Connecteur

SYMBOL	NAME	SYMBOL	NAME	SYMBOL	NAME
CN61	CONNECTOR	LEV	EXPANSION VALVE COIL	RT65	AMBIENT TEMP. THERMISTOR
C61,C62	SMOOTHING CAPACITOR	L61	REACTOR	RT68	OUTDOOR HEAT EXCHANGER TEMP. THERMISTOR
DB61,DB65	DIODE MODULE	MC	COMPRESSOR		
F701,F801,F901	FUSE (T3. 15AL250V)	MF	FAN MOTOR	TB	TERMINAL BLOCK
H	DEFROST HEATER	Q821	SWITCHING POWER TRANSISTOR	T801	TRANSFORMER
IC700,IC932	POWER MODULE	RT61	DEFROST THERMISTOR	X63, X64, X66	RELAY
IC802	POWER DEVICE	RT62	DISCHARGE TEMP. THERMISTOR	21S4	REVERSING VALVE COIL
LED	LED	RT64	FIN TEMP. THERMISTOR	26H	HEATER PROTECTOR

MUY-GL09NA-U1 MUY-GL12NA-U1

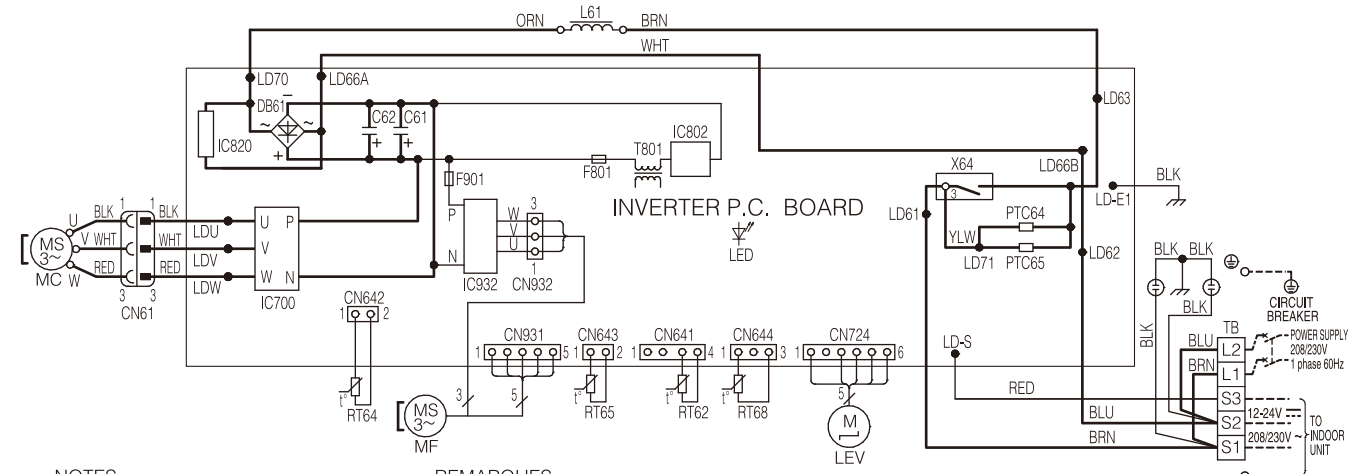

NOTES :
1. About the indoor side electric wiring, refer to the indoor unit electric wiring diagram for servicing.
2. Use copper supply wires.
3. Symbols indicate, ▭▭▭▭ :Terminal block
   ▭▭▭▭ :Connector

REMARQUES :
1. Pour le câblage électronique côté intérieur, se reporter au schéma d'entretien du câblage électronique de l'appareil intérieur.
2. Utiliser des fils d'alimentation en cuivre.
3. Les symboles ont les ▭▭▭▭ :Borne
   significations suivantes, ▭▭▭▭ :Connecteur

SYMBOL	NAME	SYMBOL	NAME	SYMBOL	NAME
C61,C62	SMOOTHING CAPACITOR	L61	REACTOR	RT68	OUTDOOR HEAT EXCHANGER TEMP. THERMISTOR
DB61	DIODE MODULE	MC	COMPRESSOR		
F801,F901	FUSE (T3. 15AL250V)	MF	FAN MOTOR	TB	TERMINAL BLOCK
IC700,IC820,IC932	POWER MODULE	PTC64, PTC65	CIRCUIT PROTECTION	T801	TRANSFORMER
IC802	POWER DEVICE	RT62	DISCHARGE TEMP. THERMISTOR	X64	RELAY
LED	LED	RT64	FIN TEMP. THERMISTOR		
LEV	EXPANSION VALVE COIL	RT65	AMBIENT TEMP. THERMISTOR		

MUY-GL09NA-U2 MUY-GL12NA-U2

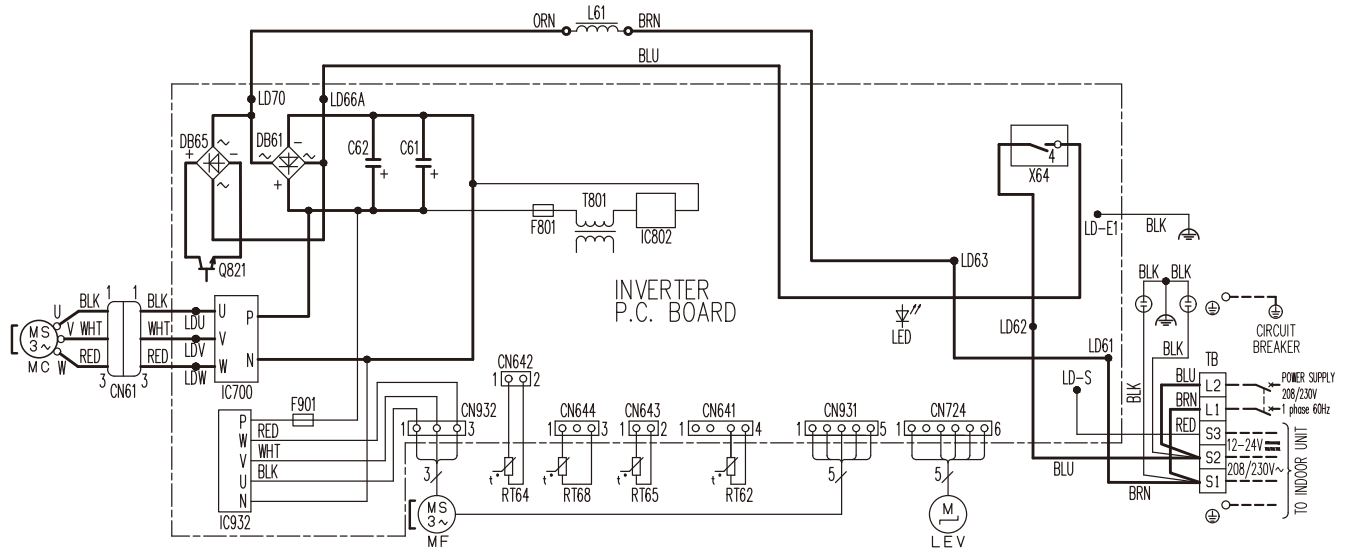

NOTES :
1. About the indoor side electric wiring, refer to the indoor unit electric wiring diagram for servicing.
2. Use copper supply wires.
3. Symbols indicate, ▭▭ :Terminal block
   ▭▭▭ :Connector

REMARQUES :
1. Pour le câblage électronique côté intérieur, se reporter au schéma d'entretien du câblage électronique de l'appareil intérieur.
2. Utiliser des fils d'alimentation en cuivre.
3. Les symboles ont les ▭▭ :Borne
   significations suivantes, ▭▭▭ :Connecteur

SYMBOL	NAME	SYMBOL	NAME	SYMBOL	NAME
CN61	CONNECTOR	LEV	EXPANSION VALVE COIL	RT65	AMBIENT TEMP. THERMISTOR
C61,C62	SMOOTHING CAPACITOR	L61	REACTOR	RT68	OUTDOOR HEAT EXCHANGER TEMP. THERMISTOR
DB61,DB65	DIODE MODULE	MC	COMPRESSOR		
F801,F901	FUSE (T3. 15AL250V)	MF	FAN MOTOR	TB	TERMINAL BLOCK
IC700,IC932	POWER MODULE	Q821	SWITCHING POWER TRANSISTOR	T801	TRANSFORMER
IC802	POWER DEVICE	RT62	DISCHARGE TEMP. THERMISTOR	X64	RELAY
LED	LED	RT64	FIN TEMP. THERMISTOR		

MUZ-GL15NA- U1

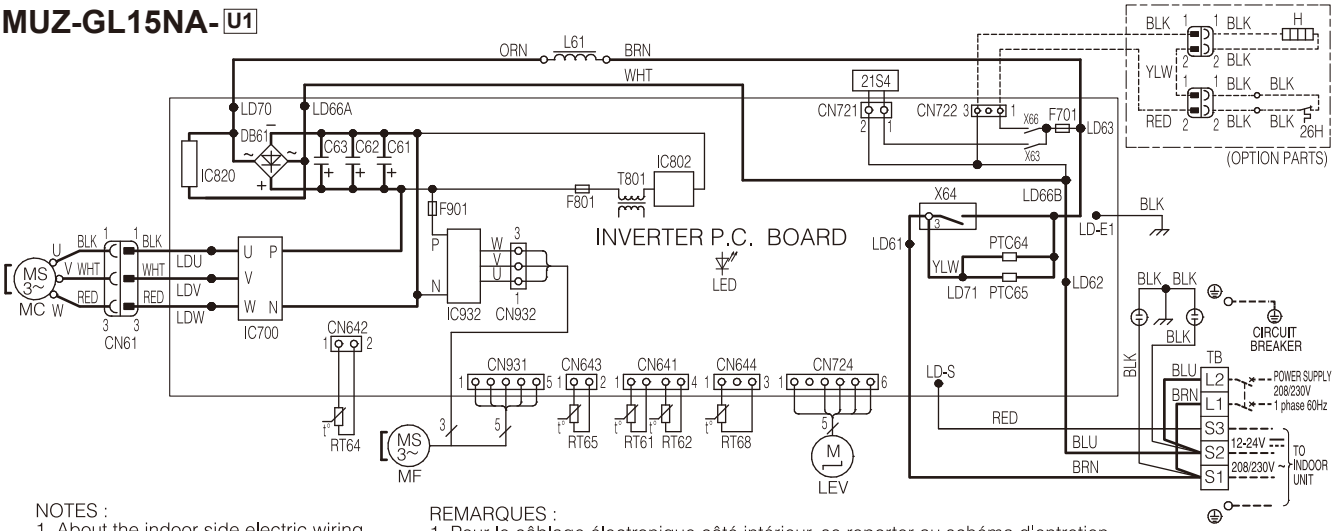

NOTES :
1. About the indoor side electric wiring, refer to the indoor unit electric wiring diagram for servicing.
2. Use copper supply wires.
3. Symbols indicate, ▭▭▭▭ :Terminal block
   ⊙⊙⊙⊙⊙ :Connector

REMARQUES :
1. Pour le câblage électronique côté intérieur, se reporter au schéma d'entretien du câblage électronique de l'appareil intérieur.
2. Utiliser des fils d'alimentation en cuivre.
3. Les symboles ont les significations suivantes, ▭▭▭▭ :Borne
   ⊙⊙⊙⊙⊙ :Connecteur

SYMBOL	NAME	SYMBOL	NAME	SYMBOL	NAME
C61,C62,C63	SMOOTHING CAPACITOR	L61	REACTOR	RT68	OUTDOOR HEAT EXCHANGER TEMP. THERMISTOR
DB61	DIODE MODULE	MC	COMPRESSOR		
F701,F801,F901	FUSE (T3. 15AL250V)	MF	FAN MOTOR	TB	TERMINAL BLOCK
H	DEFROST HEATER	PTC64, PTC65	CIRCUIT PROTECTION	T801	TRANSFORMER
IC700,IC820,IC932	POWER MODULE	RT61	DEFROST THERMISTOR	X63, X64, X66	RELAY
IC802	POWER DEVICE	RT62	DISCHARGE TEMP. THERMISTOR	21S4	REVERSING VALVE COIL
LED	LED	RT64	FIN TEMP. THERMISTOR	26H	HEATER PROTECTOR
LEV	EXPANSION VALVE COIL	RT65	AMBIENT TEMP. THERMISTOR		

MUZ-GL15NA- U2

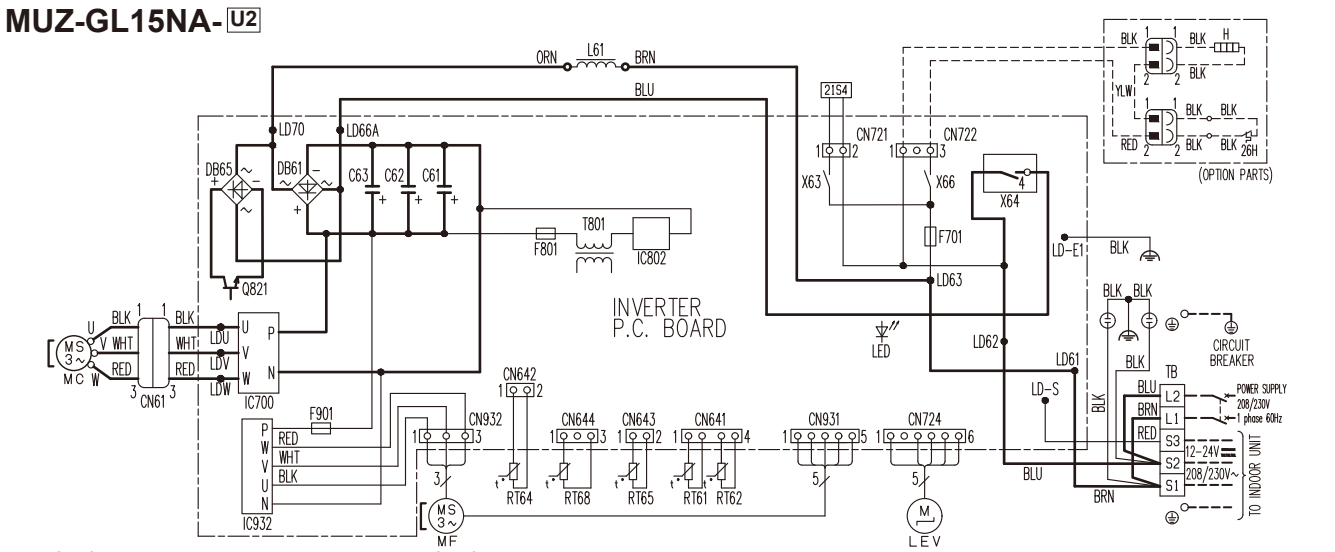

NOTES :
1. About the indoor side electric wiring, refer to the indoor unit electric wiring diagram for servicing.
2. Use copper supply wires.
3. Symbols indicate, ▭▭▭ :Terminal block
   ⊙⊙⊙ :Connector

REMARQUES :
1. Pour le câblage électronique côté intérieur, se reporter au schéma d'entretien du câblage électronique de l'appareil intérieur.
2. Utiliser des fils d'alimentation en cuivre.
3. Les symboles ont les significations suivantes, ▭▭▭ :Borne
   ⊙⊙⊙ :Connecteur

SYMBOL	NAME	SYMBOL	NAME	SYMBOL	NAME
CN61	CONNECTOR	LEV	EXPANSION VALVE COIL	RT65	AMBIENT TEMP. THERMISTOR
C61,C62,C63	SMOOTHING CAPACITOR	L61	REACTOR	RT68	OUTDOOR HEAT EXCHANGER TEMP. THERMISTOR
DB61,DB65	DIODE MODULE	MC	COMPRESSOR		
F701,F801,F901	FUSE (T3. 15AL250V)	MF	FAN MOTOR	TB	TERMINAL BLOCK
H	DEFROST HEATER (OPTION PARTS)	Q821	SWITCHING POWER TRANSISTOR	T801	TRANSFORMER
IC700,IC932	POWER MODULE	RT61	DEFROST THERMISTOR	X63, X64, X66	RELAY
IC802	POWER DEVICE	RT62	DISCHARGE TEMP. THERMISTOR	21S4	REVERSING VALVE COIL
LED	LED	RT64	FIN TEMP. THERMISTOR	26H	HEATER PROTECTOR (OPTION PARTS)

MUZ-GL15NAH- U1

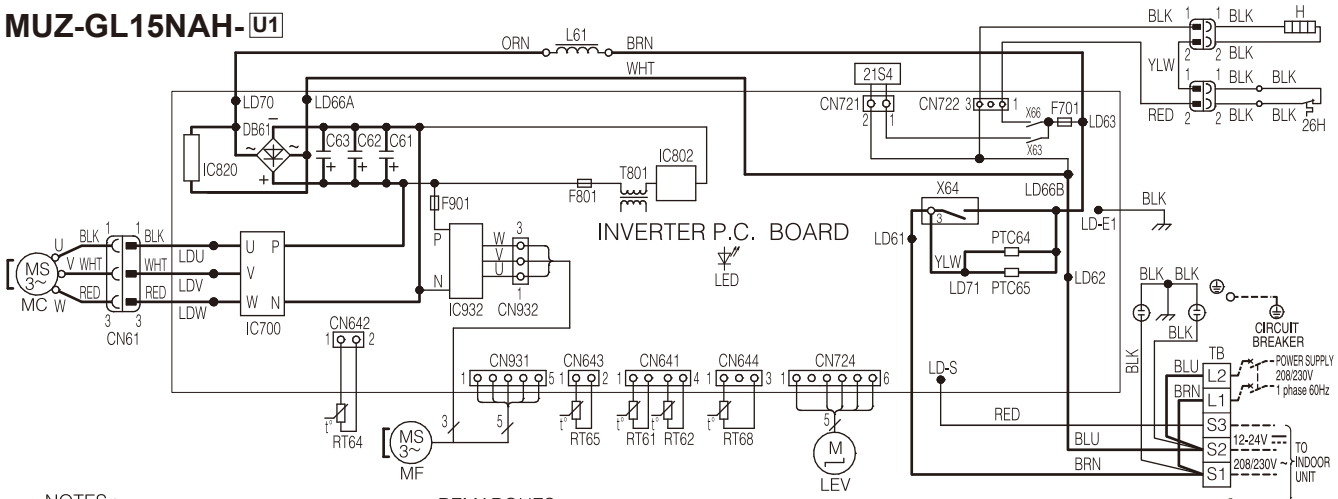

NOTES :
1. About the indoor side electric wiring, refer to the indoor unit electric wiring diagram for servicing.
2. Use copper supply wires.
3. Symbols indicate, ▭▭▭▭ :Terminal block
   ⊙⊙⊙⊙⊙ :Connector

REMARQUES :
1. Pour le câblage électronique côté intérieur, se reporter au schéma d'entretien du câblage électronique de l'appareil intérieur.
2. Utiliser des fils d'alimentation en cuivre.
3. Les symboles ont les ▭▭▭▭ :Borne
   significations suivantes, ⊙⊙⊙⊙⊙ :Connecteur

SYMBOL	NAME	SYMBOL	NAME	SYMBOL	NAME
C61,C62,C63	SMOOTHING CAPACITOR	L61	REACTOR	RT68	OUTDOOR HEAT EXCHANGER TEMP. THERMISTOR
DB61	DIODE MODULE	MC	COMPRESSOR		
F701,F801,F901	FUSE (T3. 15AL250V)	MF	FAN MOTOR	TB	TERMINAL BLOCK
H	DEFROST HEATER	PTC64, PTC65	CIRCUIT PROTECTION	T801	TRANSFORMER
IC700,IC820,IC932	POWER MODULE	RT61	DEFROST THERMISTOR	X63, X64, X66	RELAY
IC802	POWER DEVICE	RT62	DISCHARGE TEMP. THERMISTOR	21S4	REVERSING VALVE COIL
LED	LED	RT64	FIN TEMP. THERMISTOR	26H	HEATER PROTECTOR
LEV	EXPANSION VALVE COIL	RT65	AMBIENT TEMP. THERMISTOR		

MUZ-GL15NAH- U2

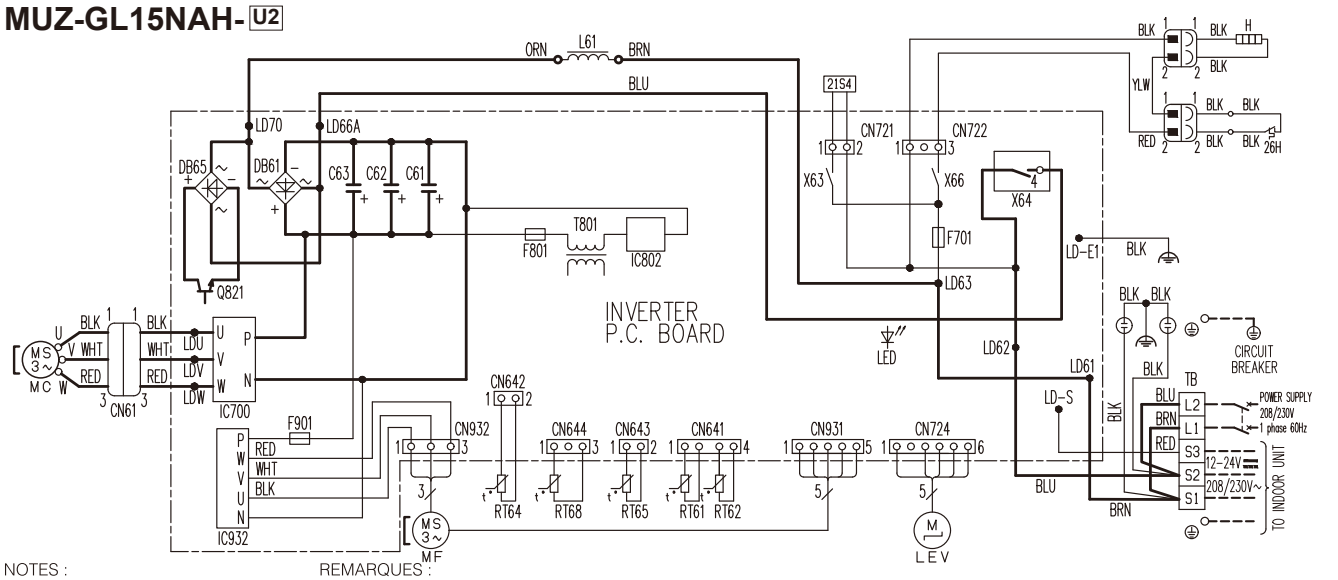

NOTES :
1. About the indoor side electric wiring, refer to the indoor unit electric wiring diagram for servicing.
2. Use copper supply wires.
3. Symbols indicate, ▭▭▭ :Terminal block
   ⊙⊙⊙ :Connector

REMARQUES :
1. Pour le câblage électronique côté intérieur, se reporter au schéma d'entretien du câblage électronique de l'appareil intérieur.
2. Utiliser des fils d'alimentation en cuivre.
3. Les symboles ont les ▭▭▭ :Borne
   significations suivantes, ⊙⊙⊙ :Connecteur

SYMBOL	NAME	SYMBOL	NAME	SYMBOL	NAME
CN61	CONNECTOR	LEV	EXPANSION VALVE COIL	RT65	AMBIENT TEMP. THERMISTOR
C61,C62,C63	SMOOTHING CAPACITOR	L61	REACTOR	RT68	OUTDOOR HEAT EXCHANGER TEMP. THERMISTOR
DB61,DB65	DIODE MODULE	MC	COMPRESSOR		
F701,F801,F901	FUSE (T3. 15AL250V)	MF	FAN MOTOR	TB	TERMINAL BLOCK
H	DEFROST HEATER	Q821	SWITCHING POWER TRANSISTOR	T801	TRANSFORMER
IC700,IC932	POWER MODULE	RT61	DEFROST THERMISTOR	X63, X64, X66	RELAY
IC802	POWER DEVICE	RT62	DISCHARGE TEMP. THERMISTOR	21S4	REVERSING VALVE COIL
LED	LED	RT64	FIN TEMP. THERMISTOR	26H	HEATER PROTECTOR

MUY-GL15NA- U1

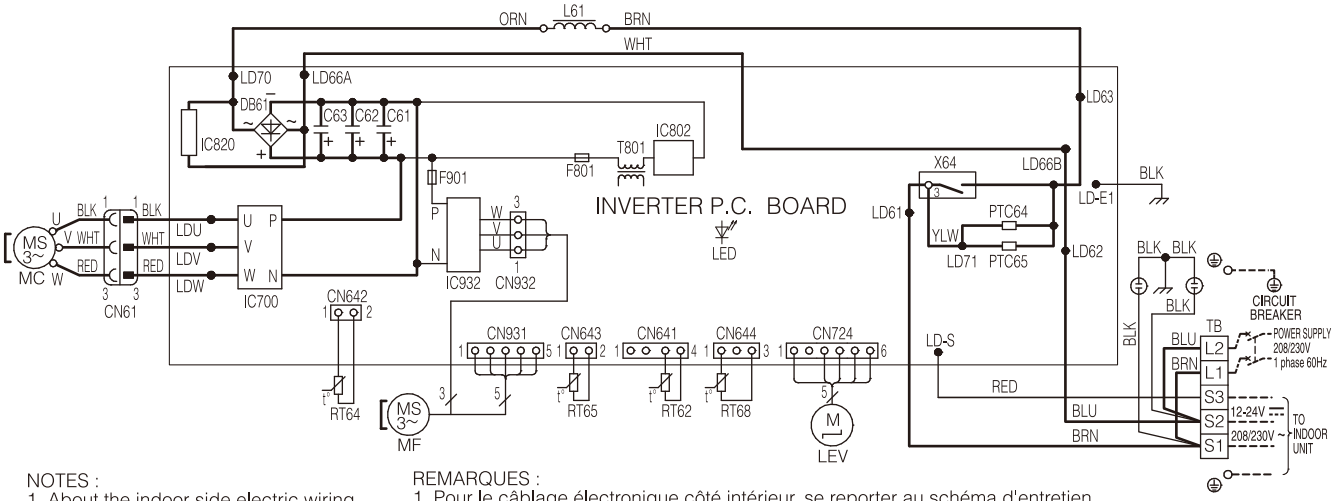

NOTES :
1. About the indoor side electric wiring, refer to the indoor unit electric wiring diagram for servicing.
2. Use copper supply wires.
3. Symbols indicate, :Terminal block
:Connector

REMARQUES :
1. Pour le câblage électronique côté intérieur, se reporter au schéma d'entretien du câblage électronique de l'appareil intérieur.
2. Utiliser des fils d'alimentation en cuivre.
3. Les symboles ont les :Borne
significations suivantes, :Connecteur

SYMBOL	NAME	SYMBOL	NAME	SYMBOL	NAME
C61,C62,C63	SMOOTHING CAPACITOR	L61	REACTOR	RT68	OUTDOOR HEAT EXCHANGER TEMP. THERMISTOR
DB61	DIODE MODULE	MC	COMPRESSOR		
F801,F901	FUSE (T3. 15AL250V)	MF	FAN MOTOR	TB	TERMINAL BLOCK
IC700,IC820,IC932	POWER MODULE	PTC64, PTC65	CIRCUIT PROTECTION	T801	TRANSFORMER
IC802	POWER DEVICE	RT62	DISCHARGE TEMP. THERMISTOR	X64	RELAY
LED	LED	RT64	FIN TEMP. THERMISTOR		
LEV	EXPANSION VALVE COIL	RT65	AMBIENT TEMP. THERMISTOR		

MUY-GL15NA- U2

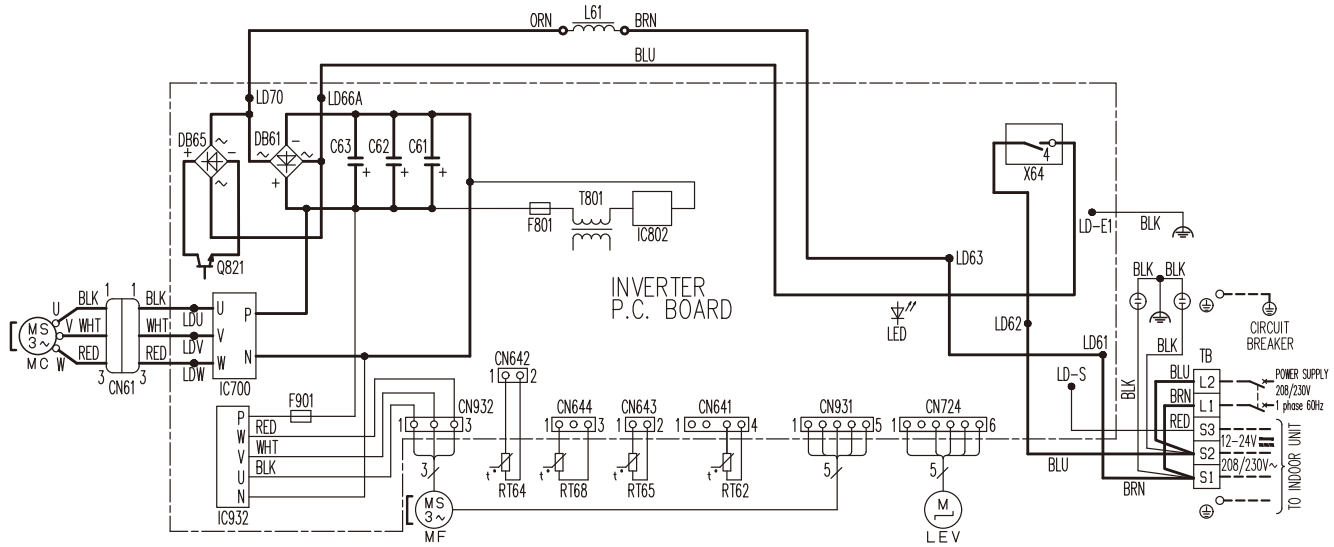

NOTES :
1. About the indoor side electric wiring, refer to the indoor unit electric wiring diagram for servicing.
2. Use copper supply wires.
3. Symbols indicate, :Terminal block
:Connector

REMARQUES :
1. Pour le câblage électronique côté intérieur, se reporter au schéma d'entretien du câblage électronique de l'appareil intérieur.
2. Utiliser des fils d'alimentation en cuivre.
3. Les symboles ont les :Borne
significations suivantes, :Connecteur

SYMBOL	NAME	SYMBOL	NAME	SYMBOL	NAME
CN61	CONNECTOR	LEV	EXPANSION VALVE COIL	RT65	AMBIENT TEMP. THERMISTOR
C61,C62,C63	SMOOTHING CAPACITOR	L61	REACTOR	RT68	OUTDOOR HEAT EXCHANGER TEMP. THERMISTOR
DB61,DB65	DIODE MODULE	MC	COMPRESSOR		
F801,F901	FUSE (T3. 15AL250V)	MF	FAN MOTOR	TB	TERMINAL BLOCK
IC700,IC932	POWER MODULE	Q821	SWITCHING POWER TRANSISTOR	T801	TRANSFORMER
IC802	POWER DEVICE	RT62	DISCHARGE TEMP. THERMISTOR	X64	RELAY
LED	LED	RT64	FIN TEMP. THERMISTOR		

MUZ-GL18NA

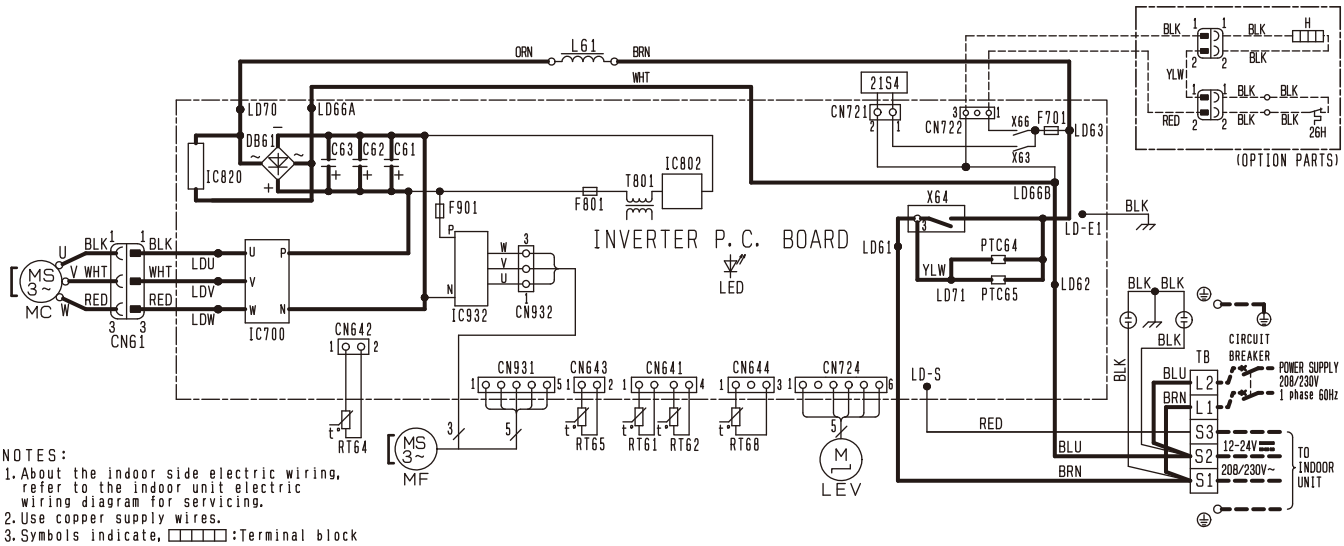

NOTES:
1. About the indoor side electric wiring, refer to the indoor unit electric wiring diagram for servicing.
2. Use copper supply wires.
3. Symbols indicate, ▭▭▭▭ :Terminal block
   ○○○○○ :Connector

REMARQUES:
1. Pour le câblage électronique côté intérieur, se reporter au schéma d'entretien du câblage électronique de l'appareil intérieur.
2. Utiliser des fils d'alimentation en cuivre.
3. Les symboles ont les significations suivantes, ▭▭▭▭ :Borne
   ○○○○○ :Connecteur

SYMBOL	NAME	SYMBOL	NAME	SYMBOL	NAME
C61, C62, C63	SMOOTHING CAPACITOR	L61	REACTOR	RT68	OUTDOOR HEAT EXCHANGER TEMP. THERMISTOR.
DB61	DIODE MODULE	MC	COMPRESSOR		
F701, F801, F901	FUSE (T3.15AL250V)	MF	FAN MOTOR	TB	TERMINAL BLOCK
H	DEFROST HEATER (OPTION PARTS)	PTC64, PTC65	CIRCUIT PROTECTION	T801	TRANSFORMER
IC700, IC820, IC932	POWER MODULE	RT61	DEFROST THERMISTOR	X63, X64, X66	RELAY
IC802	POWER DEVICE	RT62	DISCHARGE TEMP. THERMISTOR	21S4	REVERSING VALVE COIL
LED	LED	RT64	FIN TEMP. THERMISTOR	26H	HEATER PROTECTOR (OPTION PARTS)
LEV	EXPANSION VALVE COIL	RT65	AMBIENT TEMP. THERMISTOR		

MUZ-GL18NAH

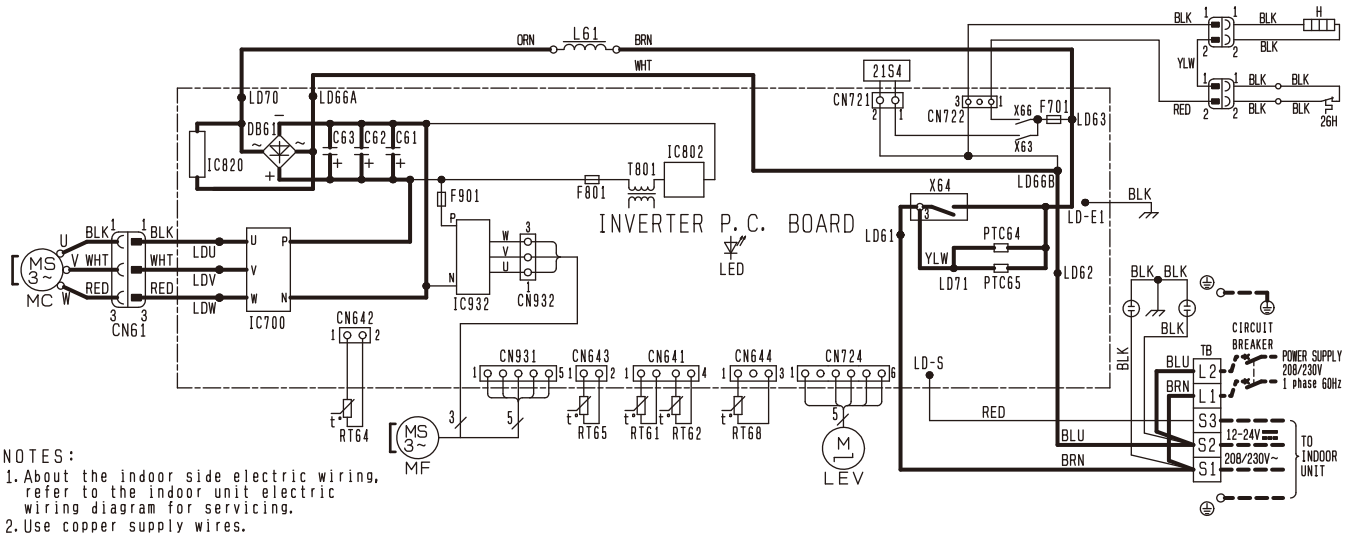

NOTES:
1. About the indoor side electric wiring, refer to the indoor unit electric wiring diagram for servicing.
2. Use copper supply wires.
3. Symbols indicate, ▭▭▭▭▭ :Terminal block
   ⊙⊙⊙⊙⊙ :Connector

REMARQUES:
1. Pour le câblage électronique côté intérieur, se reporter au schéma d'entretien du câblage électronique de l'appareil intérieur.
2. Utiliser des fils d'alimentation en cuivre.
3. Les symboles ont les significations suivantes, ▭▭▭▭▭ :Borne
   ⊙⊙⊙⊙⊙ :Connecteur

SYMBOL	NAME	SYMBOL	NAME	SYMBOL	NAME
C61, C62, C63	SMOOTHING CAPACITOR	L61	REACTOR	RT68	OUTDOOR HEAT EXCHANGER TEMP. THERMISTOR.
DB61	DIODE MODULE	MC	COMPRESSOR		
F701, F801, F901	FUSE (T3.15AL250V)	MF	FAN MOTOR	TB	TERMINAL BLOCK
H	DEFROST HEATER	PTC64, PTC65	CIRCUIT PROTECTION	T801	TRANSFORMER
IC700, IC820, IC932	POWER MODULE	RT61	DEFROST THERMISTOR	X63, X64, X66	RELAY
IC802	POWER DEVICE	RT62	DISCHARGE TEMP. THERMISTOR	21S4	REVERSING VALVE COIL
LED	LED	RT64	FIN TEMP. THERMISTOR	26H	HEATER PROTECTOR
LEV	EXPANSION VALVE COIL	RT65	AMBIENT TEMP. THERMISTOR		

MUY-GL18NA

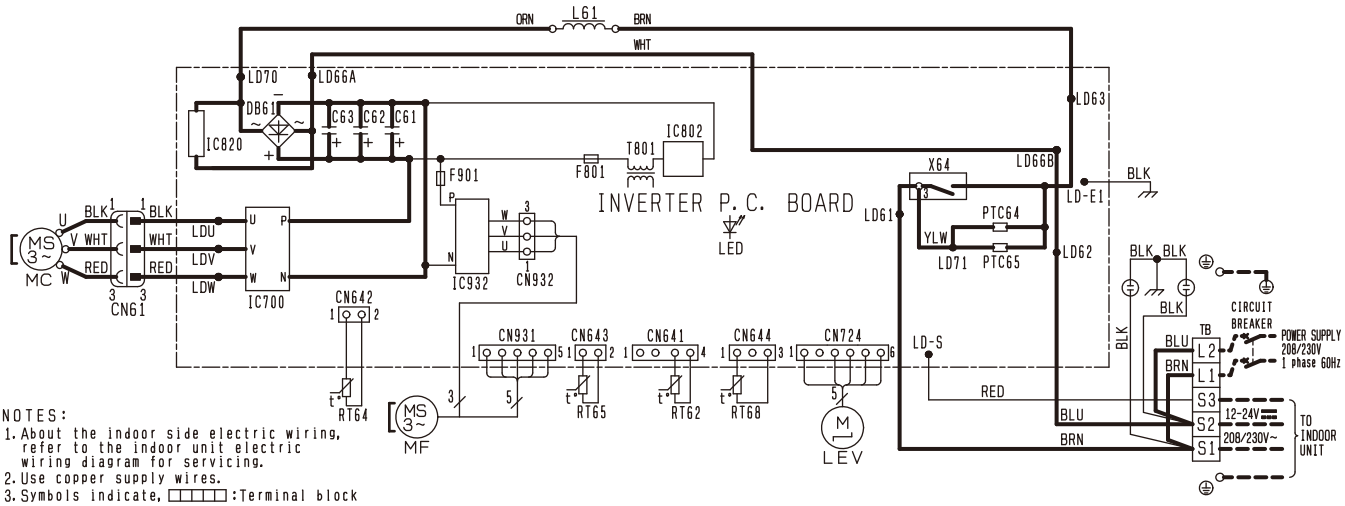

NOTES:
1. About the indoor side electric wiring, refer to the indoor unit electric wiring diagram for servicing.
2. Use copper supply wires.
3. Symbols indicate, :Terminal block
:Connector

REMARQUES:
1. Pour le câblage électronique côté intérieur, se reporter au schéma d'entretien du câblage électronique de l'appareil intérieur.
2. Utiliser des fils d'alimentation en cuivre.
3. Les symboles ont les significations suivantes, :Borne
:Connecteur

SYMBOL	NAME	SYMBOL	NAME	SYMBOL	NAME
C61, C62, C63	SMOOTHING CAPACITOR	L61	REACTOR	RT68	OUTDOOR HEAT EXCHANGER TEMP. THERMISTOR.
DB61	DIODE MODULE	MC	COMPRESSOR		
F801, F901	FUSE (T3.15AL250V)	MF	FAN MOTOR	TB	TERMINAL BLOCK
IC700, IC820, IC932	POWER MODULE	PTC64, PTC65	CIRCUIT PROTECTION	T801	TRANSFORMER
IC802	POWER DEVICE	RT62	DISCHARGE TEMP. THERMISTOR	X64	RELAY
LED	LED	RT64	FIN TEMP. THERMISTOR		
LEV	EXPANSION VALVE COIL	RT65	AMBIENT TEMP. THERMISTOR		

MUZ-GL24NA

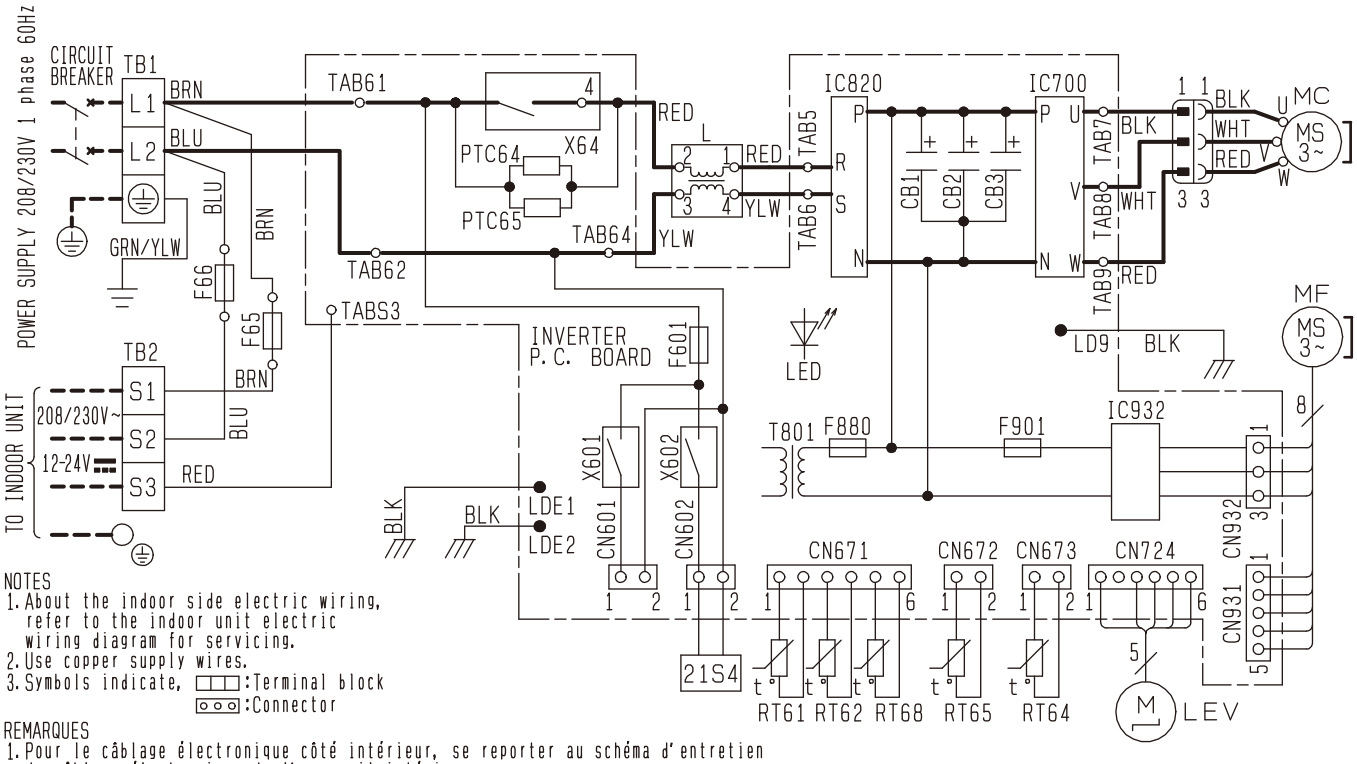

NOTES
1. About the indoor side electric wiring, refer to the indoor unit electric wiring diagram for servicing.
2. Use copper supply wires.
3. Symbols indicate, ☐☐☐:Terminal block
   ⊙⊙⊙:Connector

REMARQUES
1. Pour le câblage électronique côté intérieur, se reporter au schéma d'entretien du câblage électronique de l'appareil intérieur.
2. Utiliser des fils d'alimentation en cuivre.
3. Les symboles ont les significations suivantes, ☐☐☐:Borne ⊙⊙⊙:Connecteur

SYMBOL	NAME	SYMBOL	NAME	SYMBOL	NAME
CB1~3	SMOOTHING CAPACITOR	LED	LED	RT65	AMBIENT TEMP. THERMISTOR
F65, F66	FUSE (T6. 3AL250V)	LEV	EXPANSION VALVE COIL	RT68	OUTDOOR HEAT EXCHANGER TEMP. THERMISTOR
F601	FUSE (T3. 15AL250V)	MC	COMPRESSOR		
F880	FUSE (T3. 15AL250V)	MF	FAN MOTOR	TB1, TB2	TERMINAL BLOCK
F901	FUSE (T3. 15AL250V)	PTC64	CIRCUIT PROTECTION	T801	TRANSFORMER
IC700	IGBT Module	PTC65	CIRCUIT PROTECTION	X601	RELAY
IC820	DIODE Module	RT61	DEFROST THERMISTOR	X602	RELAY
IC932	IGBT Module	RT62	DISCHARGE TEMP. THERMISTOR	X64	RELAY
L	REACTOR	RT64	FIN TEMP. THERMISTOR	21S4	REVERSING VALVE COIL

MUZ-GL24NAH

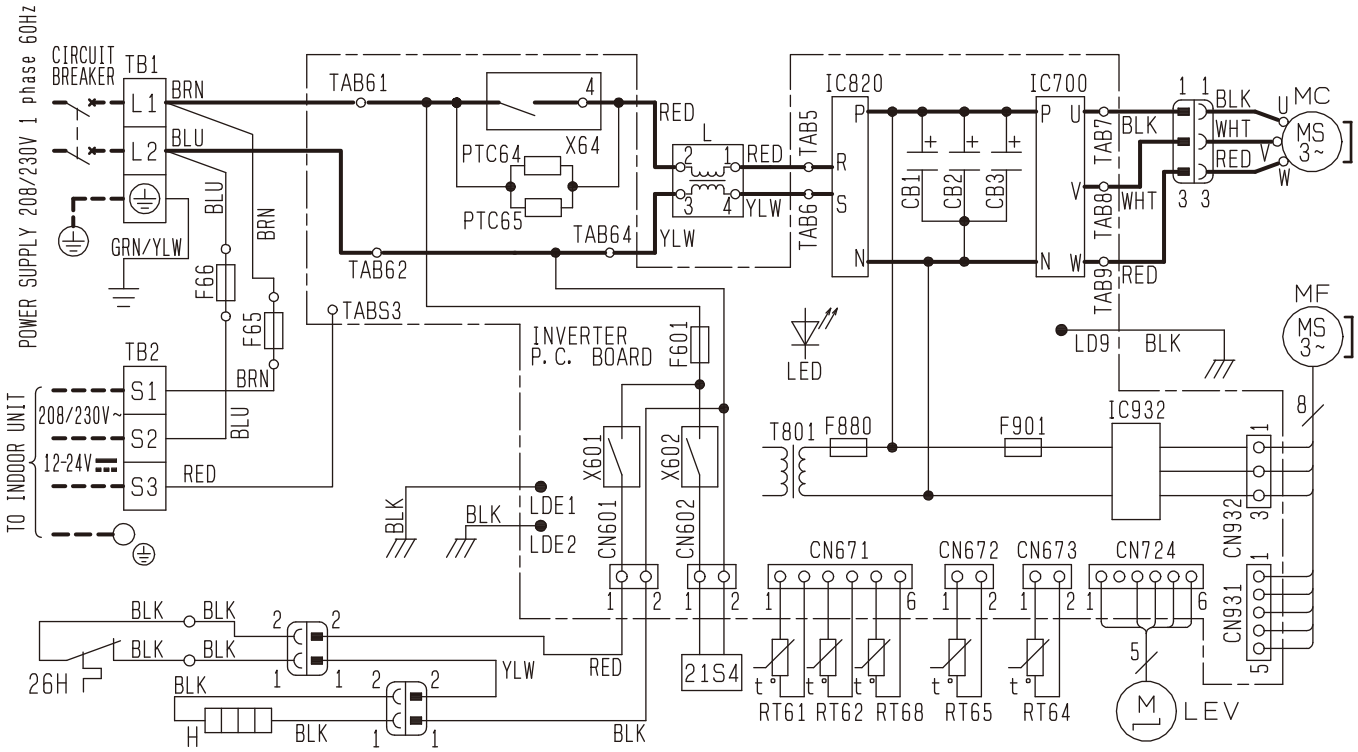

NOTES
1. About the indoor side electric wiring, refer to the indoor unit electric wiring diagram for servicing.
2. Use copper supply wires.
3. Symbols indicate, ☐☐☐:Terminal block
   ○○○:Connector

REMARQUES
1. Pour le câblage électronique côté intérieur, se reporter au schéma d'entretien du câblage électronique de l'appareil intérieur.
2. Utiliser des fils d'alimentation en cuivre.
3. Les symboles ont les significations suivantes, ☐☐☐:Borne ○○○:Connecteur

SYMBOL	NAME	SYMBOL	NAME	SYMBOL	NAME
CB1～3	SMOOTHING CAPACITOR	LED	LED	RT68	OUTDOOR HEAT EXCHANGER TEMP. THERMISTOR
F65, F66	FUSE (T6. 3AL250V)	LEV	EXPANSION VALVE COIL		
F601	FUSE (T3. 15AL250V)	MC	COMPRESSOR	TB1, TB2	TERMINAL BLOCK
F880	FUSE (T3. 15AL250V)	MF	FAN MOTOR	T801	TRANSFORMER
F901	FUSE (T3. 15AL250V)	PTC64	CIRCUIT PROTECTION	X601	RELAY
H	DEFROST HEATER	PTC65	CIRCUIT PROTECTION	X602	RELAY
IC700	IGBT Module	RT61	DEFROST THERMISTOR	X64	RELAY
IC820	DIODE Module	RT62	DISCHARGE TEMP. THERMISTOR	21S4	REVERSING VALVE COIL
IC932	IGBT Module	RT64	FIN TEMP. THERMISTOR	26H	HEATER PROTECTOR
L	REACTOR	RT65	AMBIENT TEMP. THERMISTOR		

MUY-GL24NA

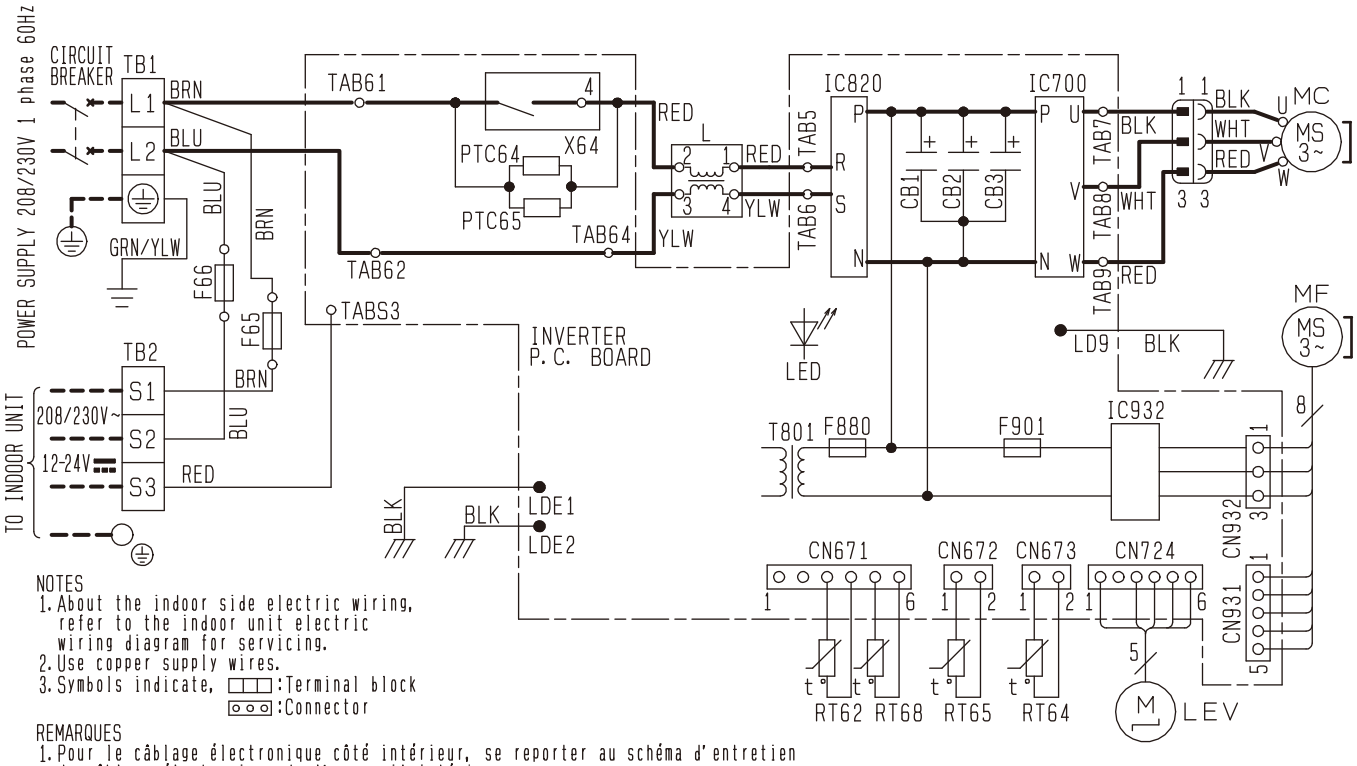

NOTES
1. About the indoor side electric wiring, refer to the indoor unit electric wiring diagram for servicing.
2. Use copper supply wires.
3. Symbols indicate, ☐☐☐ :Terminal block
   ⊙⊙⊙ :Connector

REMARQUES
1. Pour le câblage électronique côté intérieur, se reporter au schéma d'entretien du câblage électronique de l'appareil intérieur.
2. Utiliser des fils d'alimentation en cuivre.
3. Les symboles ont les significations suivantes, ☐☐☐ :Borne ⊙⊙⊙ :Connecteur

SYMBOL	NAME	SYMBOL	NAME	SYMBOL	NAME
CB1～3	SMOOTHING CAPACITOR	LED	LED	RT64	FIN TEMP. THERMISTOR
F65, F66	FUSE (T6. 3AL250V)	LEV	EXPANSION VALVE COIL	RT65	AMBIENT TEMP. THERMISTOR
F880	FUSE (T3. 15AL250V)	MC	COMPRESSOR	RT68	OUTDOOR HEAT EXCHANGER TEMP. THERMISTOR
F901	FUSE (T3. 15AL250V)	MF	FAN MOTOR		
IC700	IGBT Module	PTC64	CIRCUIT PROTECTION	TB1, TB2	TERMINAL BLOCK
IC820	DIODE Module	PTC65	CIRCUIT PROTECTION	T801	TRANSFORMER
IC932	IGBT Module	RT62	DISCHARGE TEMP. THERMISTOR	X64	RELAY
L	REACTOR				

6 REFRIGERANT SYSTEM DIAGRAM

MUZ-GL09NA MUZ-GL09NAH MUY-GL09NA
MUZ-GL12NA MUZ-GL12NAH MUY-GL12NA
MUZ-GL15NA MUZ-GL15NAH MUY-GL15NA

Unit: Inch (mm)

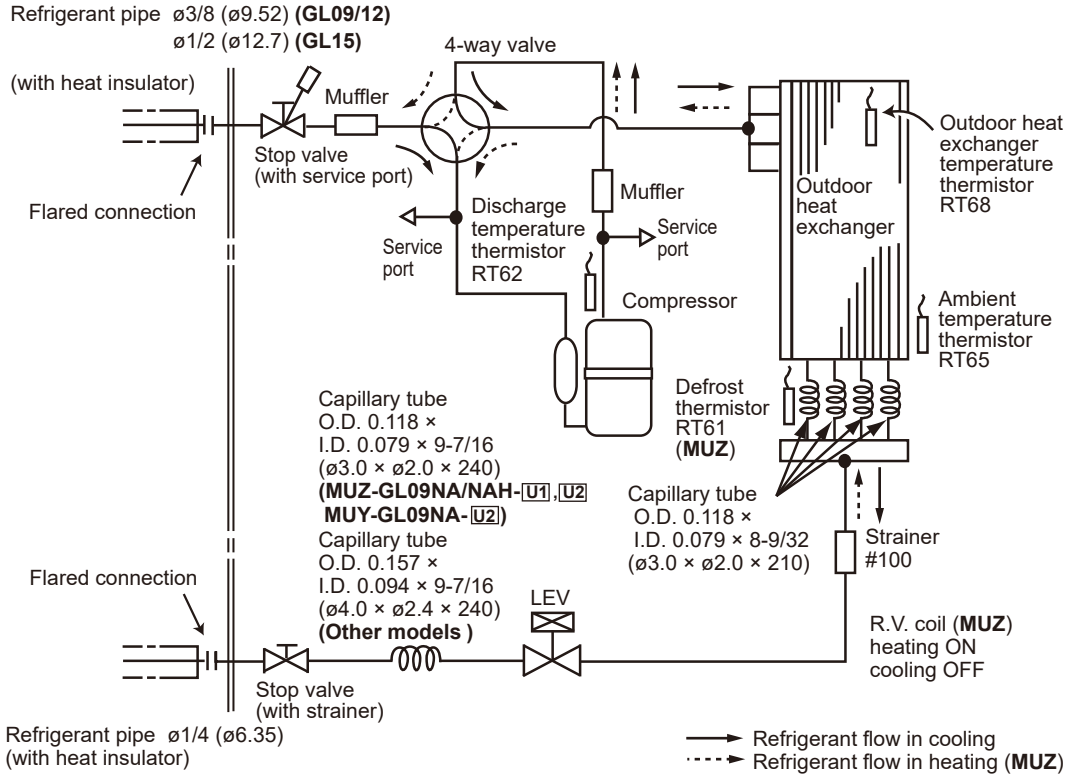

MUZ-GL18NA MUZ-GL18NAH MUY-GL18NA

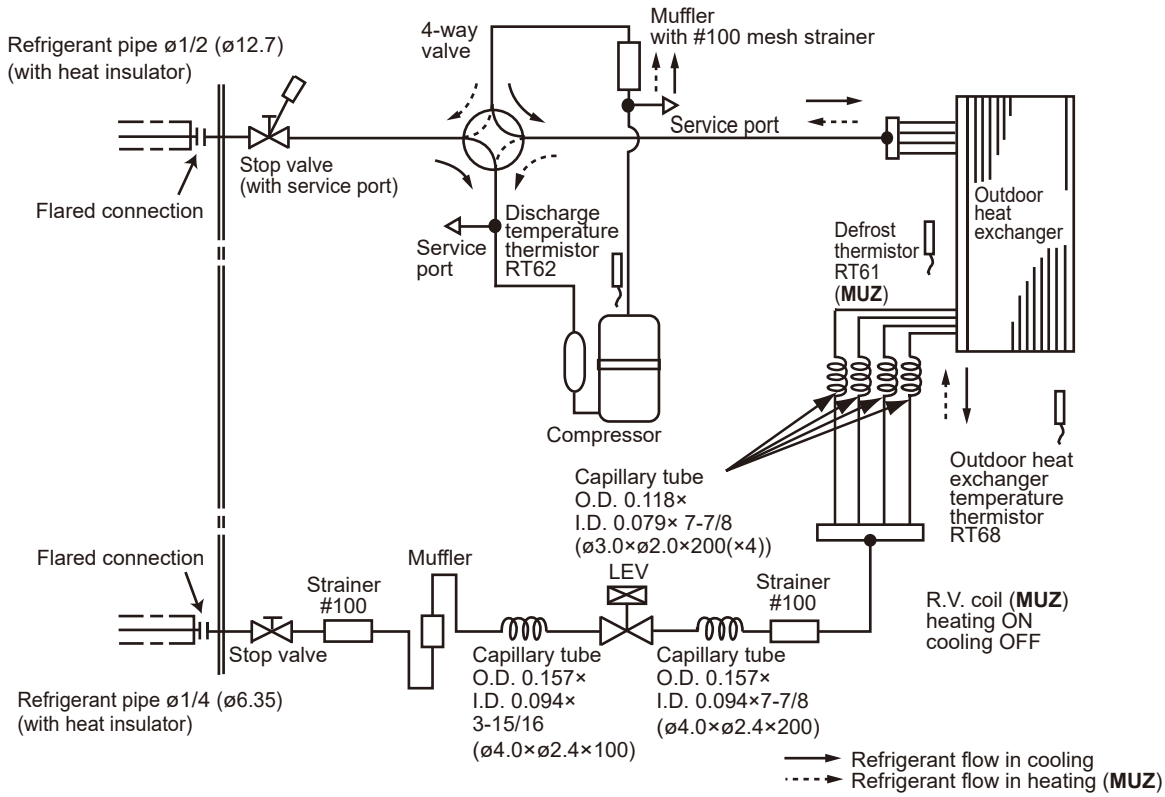

MUZ-GL24NA - U1 MUY-GL24NA

Unit: inch

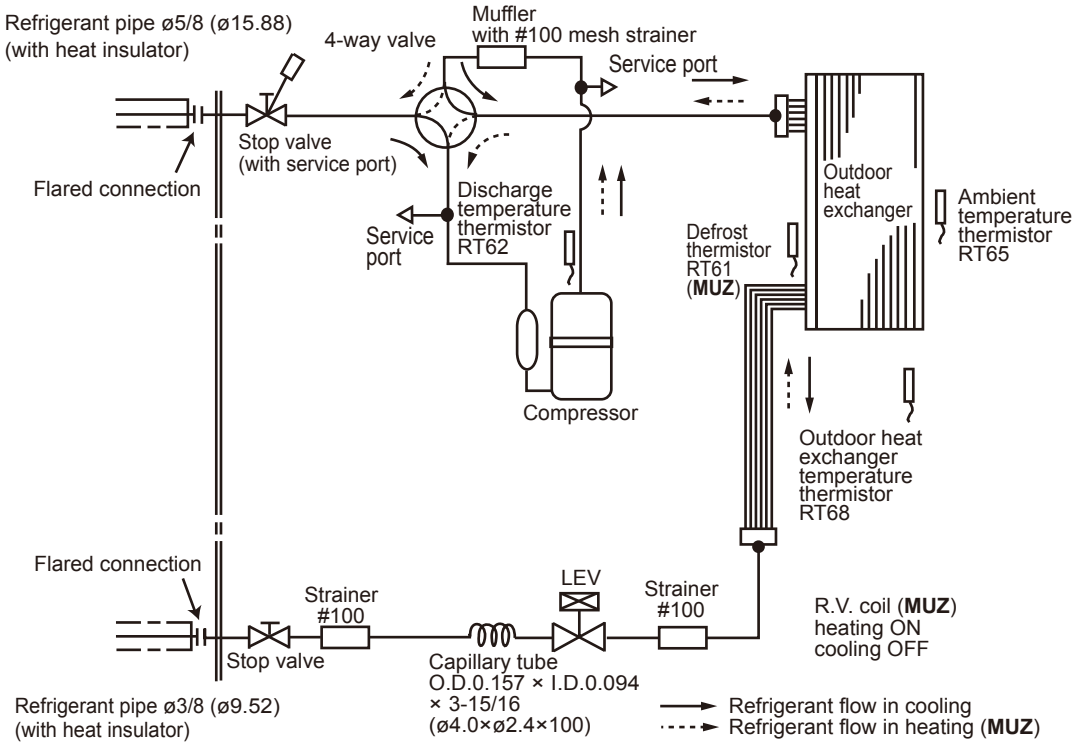

MUZ-GL24NA - U2 MUZ-GL24NAH

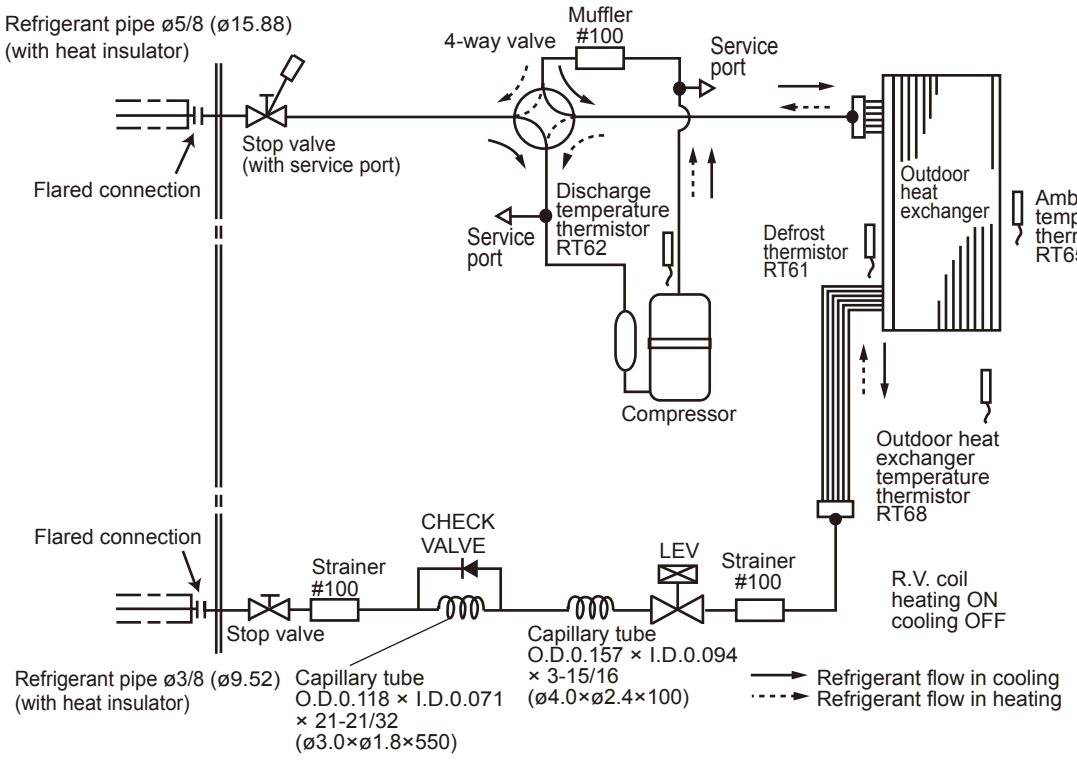

MAX. REFRIGERANT PIPING LENGTH and MAX. HEIGHT DIFFERENCE

Model	Refrigerant piping: ft.		Piping size O.D: in.	
	Max. Length A	Max. Height difference B	Gas	Liquid
MUZ-GL09NA **MUZ-GL09NAH** **MUY-GL09NA** **MUZ-GL12NA** **MUZ-GL12NAH** **MUY-GL12NA**	65	40	3/8	1/4
MUZ-GL15NA **MUZ-GL15NAH** **MUY-GL15NA**	65	40	1/2	1/4
MUZ-GL18NA **MUZ-GL18NAH** **MUY-GL18NA**	100	50	1/2	1/4
MUZ-GL24NA **MUZ-GL24NAH** **MUY-GL24NA**	100	50	5/8	3/8

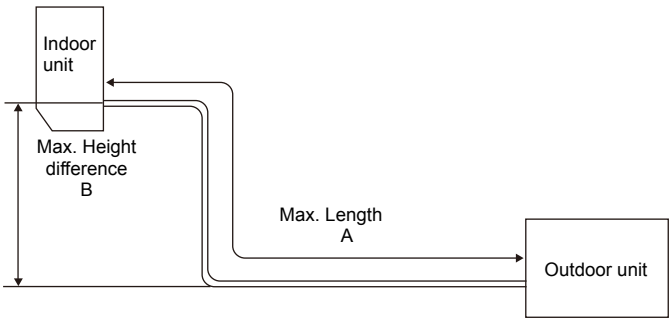

ADDITIONAL REFRIGERANT CHARGE (R410A: oz.)

NOTE: Refrigerant piping exceeding 25 ft. requires additional refrigerant charge according to the calculation.

Model	Outdoor unit precharged	Refrigerant piping length (one way): ft.					
		25	30	40	50	60	65
MUZ-GL09NA - U1 **MUZ-GL09NA** - U2 **MUZ-GL09NAH** - U1 **MUZ-GL09NAH** - U2 **MUY-GL09NA** - U2	2 lb. 5 oz.	0	1.08	3.24	5.40	7.56	8.64
MUZ-GL09NA - U8 **MUZ-GL09NAH** - U8 **MUY-GL09NA** - U1 **MUZ-GL12NA** **MUZ-GL12NAH** **MUY-GL12NA** **MUZ-GL15NA** **MUZ-GL15NAH** **MUY-GL15NA**	2 lb. 9 oz.						

Calculation: X oz. = 1.08/5 oz./ft. × (Refrigerant piping length (ft.) - 25)

NOTE: Refrigerant piping exceeding 25 ft. requires additional refrigerant charge according to the calculation.

Model	Outdoor unit precharged	Refrigerant piping length (one way): ft.								
		25	30	40	50	60	70	80	90	100
MUZ-GL18NA **MUZ-GL18NAH** **MUY-GL18NA**	3 lb. 9 oz.	0	1.08	3.24	5.40	7.56	9.72	11.88	14.04	16.20

Calculation: X oz. = 1.08/5 oz./ft. × (Refrigerant piping length (ft.) - 25)

NOTE: Refrigerant piping exceeding 33 ft. requires additional refrigerant charge according to the calculation.

Model	Outdoor unit precharged	Refrigerant piping length (one way): ft.							
		33	40	50	60	70	80	90	100
MUZ-GL24NA **MUZ-GL24NAH** **MUY-GL24NA**	4 lb. 3 oz.	0	4.14	10.06	15.98	21.90	27.82	33.74	39.66

Calculation: X oz. = 2.96/5 oz./ft. × (Refrigerant piping length (ft.) - 33)

7 DATA

MUZ-GL09NA MUZ-GL09NAH MUY-GL09NA
MUZ-GL12NA MUZ-GL12NAH MUY-GL12NA
MUZ-GL15NA MUZ-GL15NAH MUY-GL15NA
MUZ-GL18NA MUZ-GL18NAH MUY-GL18NA
MUZ-GL24NA MUZ-GL24NAH MUY-GL24NA

7-1. PERFORMANCE DATA

1) COOLING CAPACITY

Model	Indoor air IWB (˚F)	Outdoor intake air DB temperature (˚F)														
		75			85			95			105			115		
		TC	SHC	TPC	TC	SHC	TPC	TC	SHC	TPC	TC	SHC	TPC	TC	SHC	TPC
MUZ-GL09NA **MUZ-GL09NAH** **MUY-GL09NA**	71	11.0	7.6	0.52	10.3	7.1	0.57	9.7	6.6	0.61	9.0	6.2	0.65	8.3	5.7	0.67
	67	10.4	8.6	0.49	9.7	8.0	0.54	9.0	7.4	0.59	8.4	6.9	0.62	7.7	6.3	0.65
	63	9.8	9.4	0.47	9.1	8.7	0.52	8.5	8.1	0.56	7.7	7.3	0.60	7.0	6.7	0.62
MUZ-GL12NA **MUZ-GL12NAH** **MUY-GL12NA**	71	14.7	9.4	0.82	13.7	8.7	0.90	12.9	8.2	0.97	12.0	7.6	1.02	11.0	7.0	1.06
	67	13.9	10.7	0.77	13.0	10.0	0.85	12.0	9.2	0.92	11.2	8.6	0.98	10.3	7.9	1.02
	63	13.1	11.8	0.74	12.1	10.9	0.81	11.3	10.2	0.88	10.3	9.3	0.94	9.4	8.5	0.98
MUZ-GL15NA **MUZ-GL15NAH** **MUY-GL15NA**	71	17.2	9.7	0.96	16.0	9.1	1.05	15.1	8.5	1.13	14.0	7.9	1.19	12.9	7.3	1.24
	67	16.2	11.4	0.91	15.1	10.6	1.00	14.0	9.8	1.08	13.0	9.1	1.14	12.0	8.4	1.20
	63	15.3	12.7	0.86	14.1	11.8	0.96	13.2	11.0	1.03	12.0	10.0	1.10	10.9	9.1	1.14
MUZ-GL18NA **MUZ-GL18NAH** **MUY-GL18NA**	71	22.1	16.2	1.19	20.6	15.2	1.31	19.4	14.3	1.41	18.0	13.3	1.48	16.6	12.2	1.54
	67	20.9	18.2	1.13	19.4	16.9	1.24	18.0	15.7	1.34	16.7	14.6	1.42	15.4	13.4	1.49
	63	19.6	19.7	1.07	18.2	18.2	1.19	16.9	17.0	1.28	15.4	15.4	1.37	14.0	14.1	1.42
MUZ-GL24NA **MUZ-GL24NAH** **MUY-GL24NA**	71	27.6	17.0	1.60	25.8	15.9	1.76	24.2	14.9	1.89	22.5	13.9	1.99	20.7	12.8	2.07
	67	26.1	19.6	1.51	24.3	18.2	1.67	22.5	16.9	1.80	20.9	15.7	1.91	19.2	14.4	2.00
	63	24.5	21.7	1.44	22.7	20.1	1.59	21.2	18.7	1.72	19.2	17.0	1.84	17.6	15.5	1.91

NOTE: 1. IWB : Intake air wet-bulb temperature TC : Total Capacity (x10^3 Btu/h)
SHC : Sensible Heat Capacity (x10^3 Btu/h) TPC : Total Power Consumption (kW)
2. SHC is based on 80˚F of indoor Intake air DB temperature.

2) COOLING CAPACITY CORRECTIONS

Model	Refrigerant piping length (one way: ft.)			
	25 (std.)	40	65	100
MUZ-GL09NA **MUZ-GL09NAH** **MUY-GL09NA** **MUZ-GL12NA** **MUZ-GL12NAH** **MUY-GL12NA** **MUZ-GL15NA** **MUZ-GL15NAH** **MUY-GL15NA**	1.0	0.988	0.967	-
MUZ-GL18NA **MUZ-GL18NAH** **MUY-GL18NA**	1.0	0.985	0.963	0.933
MUZ-GL24NA **MUZ-GL24NAH** **MUY-GL24NA**	1.0	0.983	0.956	0.921

3) HEATING CAPACITY CORRECTIONS

Model	Refrigerant piping length (one way: ft.)			
	25 (std.)	40	65	100
MUZ-GL09NA **MUZ-GL09NAH** **MUZ-GL12NA** **MUZ-GL12NAH** **MUZ-GL15NA** **MUZ-GL15NAH**	1.0	0.997	0.993	-
MUZ-GL18NA **MUZ-GL18NAH** **MUZ-GL24NA** **MUZ-GL24NAH**	1.0	0.997	0.993	0.987

4) HEATING CAPACITY (MUZ)

Model	Indoor air	Outdoor intake air WB temperature (˚F)													
	IDB (˚F)	5		15		25		35		43		45		55	
		TC	TPC	TC	TPC	TC	TPC	TC	TPC	TC	TPC	TC	TPC	TC	TPC
MUZ-GL09NA	75	4.8	0.42	6.3	0.54	7.9	0.63	9.4	0.70	10.6	0.74	11.0	0.75	12.4	0.78
	70	5.2	0.41	6.7	0.52	8.2	0.62	9.6	0.68	10.9	0.72	11.2	0.73	12.7	0.76
	65	5.5	0.39	6.9	0.50	8.6	0.59	10.0	0.67	11.2	0.70	11.6	0.71	13.0	0.75
MUZ-GL09NAH	75	4.8	0.55	6.3	0.67	7.9	0.76	9.4	0.70	10.6	0.74	11.0	0.75	12.4	0.78
	70	5.2	0.54	6.7	0.65	8.2	0.75	9.6	0.68	10.9	0.72	11.2	0.73	12.7	0.76
	65	5.5	0.52	6.9	0.63	8.6	0.72	10.0	0.67	11.2	0.70	11.6	0.71	13.0	0.75
MUZ-GL12NA	75	6.3	0.65	8.4	0.82	10.4	0.96	12.5	1.07	14.0	1.13	14.5	1.14	16.4	1.19
	70	6.8	0.62	8.9	0.79	10.8	0.94	12.7	1.05	14.4	1.10	14.8	1.12	16.8	1.17
	65	7.2	0.59	9.1	0.76	11.3	0.91	13.2	1.02	14.8	1.07	15.3	1.09	17.1	1.14
MUZ-GL12NAH	75	6.3	0.78	8.4	0.95	10.4	1.09	12.5	1.07	14.0	1.13	14.5	1.14	16.4	1.19
	70	6.8	0.75	8.9	0.92	10.8	1.07	12.7	1.05	14.4	1.10	14.8	1.12	16.8	1.17
	65	7.2	0.72	9.1	0.89	11.3	1.04	13.2	1.02	14.8	1.07	15.3	1.09	17.1	1.14
MUZ-GL15NA	75	7.9	0.94	10.4	1.19	13.1	1.40	15.6	1.56	17.6	1.64	18.1	1.66	20.5	1.73
	70	8.6	0.90	11.1	1.15	13.5	1.37	15.9	1.52	18.0	1.60	18.5	1.63	21.0	1.70
	65	9.0	0.86	11.3	1.10	14.1	1.32	16.5	1.48	18.5	1.56	19.1	1.58	21.4	1.66
MUZ-GL15NAH	75	7.9	1.07	10.4	1.32	13.1	1.53	15.6	1.56	17.6	1.64	18.1	1.66	20.5	1.73
	70	8.6	1.03	11.1	1.28	13.5	1.50	15.9	1.52	18.0	1.60	18.5	1.63	21.0	1.70
	65	9.0	0.99	11.3	1.23	14.1	1.45	16.5	1.48	18.5	1.56	19.1	1.58	21.4	1.66
MUZ-GL18NA	75	9.5	0.99	12.5	1.25	15.7	1.47	18.7	1.64	21.1	1.72	21.7	1.75	24.6	1.81
	70	10.3	0.95	13.3	1.21	16.2	1.44	19.1	1.60	21.6	1.68	22.2	1.71	25.2	1.78
	65	10.8	0.91	13.6	1.16	17.0	1.39	19.8	1.55	22.2	1.64	22.9	1.66	25.7	1.75
MUZ-GL18NAH	75	9.5	1.12	12.5	1.38	15.7	1.60	18.7	1.64	21.1	1.72	21.7	1.75	24.6	1.81
	70	10.3	1.08	13.3	1.34	16.2	1.57	19.1	1.60	21.6	1.68	22.2	1.71	25.2	1.78
	65	10.8	1.04	13.6	1.29	17.0	1.52	19.8	1.55	22.2	1.64	22.9	1.66	25.7	1.75
MUZ-GL24NA	75	12.1	1.38	16.0	1.74	20.0	2.05	23.9	2.28	26.9	2.40	27.7	2.43	31.5	2.53
	70	13.1	1.32	17.0	1.68	20.7	2.00	24.4	2.22	27.6	2.34	28.4	2.39	32.2	2.48
	65	13.8	1.26	17.4	1.61	21.7	1.93	25.3	2.16	28.4	2.28	29.3	2.32	32.8	2.43
MUZ-GL24NAH	75	12.1	1.38	16.0	1.74	20.0	2.05	23.9	2.28	26.9	2.40	27.7	2.43	31.5	2.53
	70	13.1	1.32	17.0	1.68	20.7	2.00	24.4	2.22	27.6	2.34	28.4	2.39	32.2	2.48
	65	13.8	1.26	17.4	1.61	21.7	1.93	25.3	2.16	28.4	2.28	29.3	2.32	32.8	2.43

NOTE: 1. IDB : Intake air dry-bulb temperature
TC : Total Capacity ($x10^3$ Btu/h) TPC : Total Power Consumption (kW)
2. Above data is for heating operation without any frost.

How to operate with fixed operational frequency of the compressor.

1. Press the EMERGENCY OPERATION switch on the front of the indoor unit, and select either EMERGENCY COOL mode or EMERGENCY HEAT mode before starting to operate the air conditioner.
2. The compressor starts with operational frequency.
3. The fan speed of the indoor unit is High.
4. This operation continues for 30 minutes.
5. In order to release this operation, press the EMERGENCY OPERATION switch or press any button on the remote controller.

7-2. PERFORMANCE CURVE

Cooling

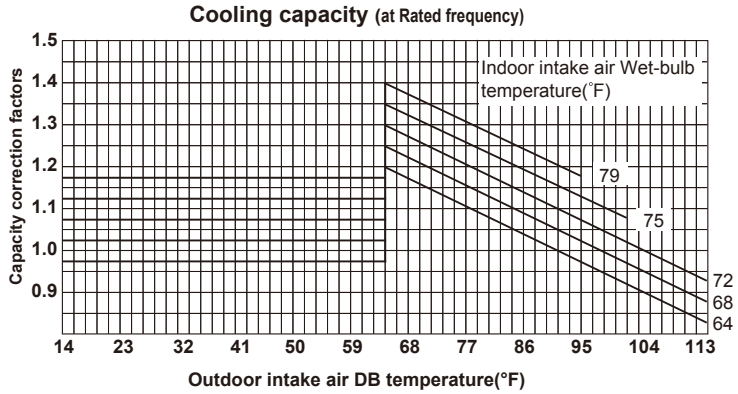

MUZ-GL09NA MUZ-GL09NAH MUY-GL09NA

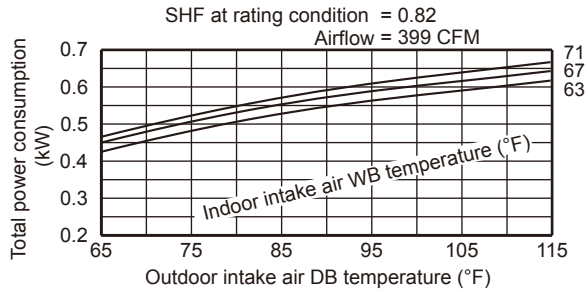

MUZ-GL12NA MUZ-GL12NAH MUY-GL12NA

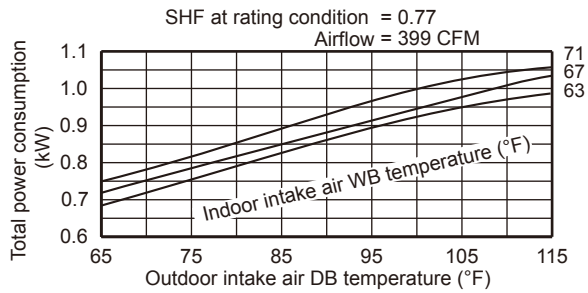

MUZ-GL15NA MUZ-GL15NAH MUY-GL15NA

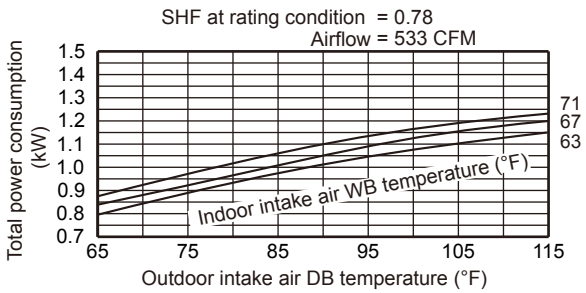

MUZ-GL18NA MUZ-GL18NAH MUY-GL18NA

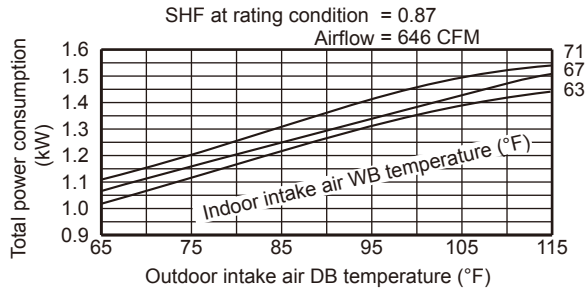

MUZ-GL24NA MUZ-GL24NAH MUY-GL24NA

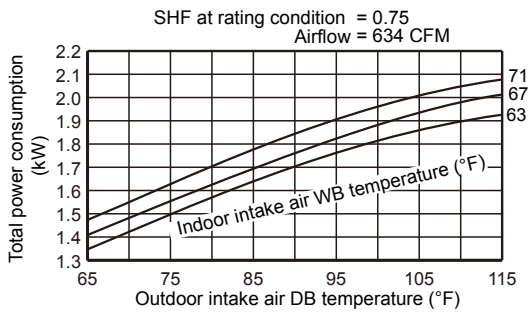

This value of frequency is not the same as the actual frequency in operating. Refer to 7-5 and 7-6 for the relationships between frequency and capacity.

Heating

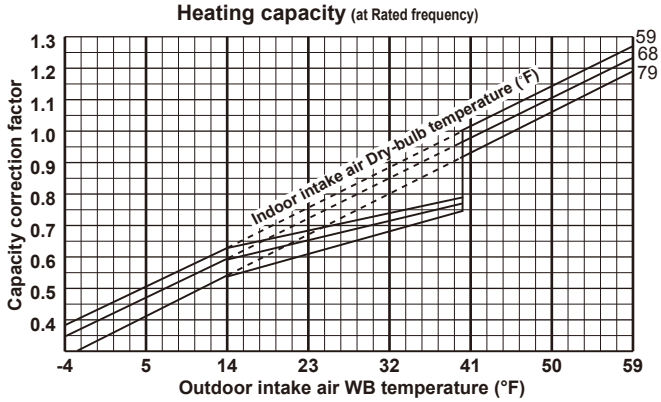

MUZ-GL09NA

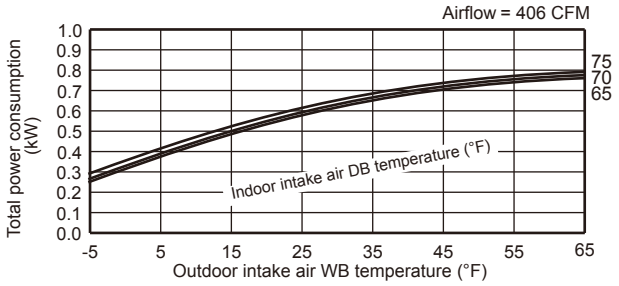

MUZ-GL09NAH

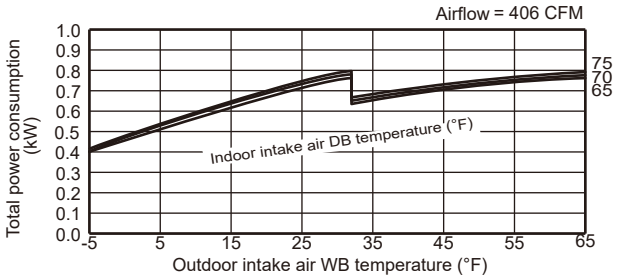

MUZ-GL12NA

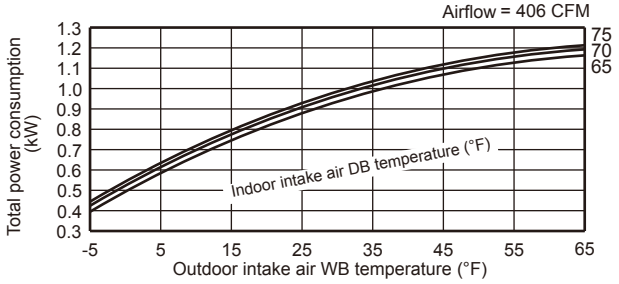

MUZ-GL12NAH

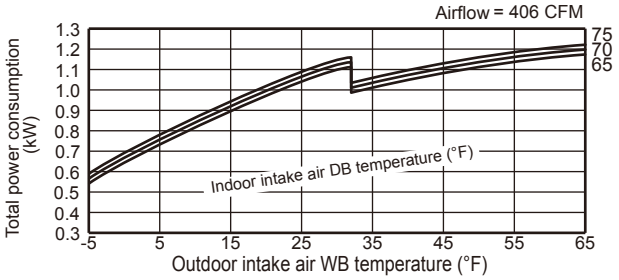

MUZ-GL15NA

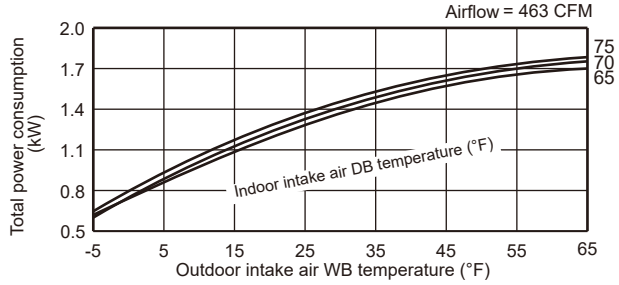

MUZ-GL15NAH

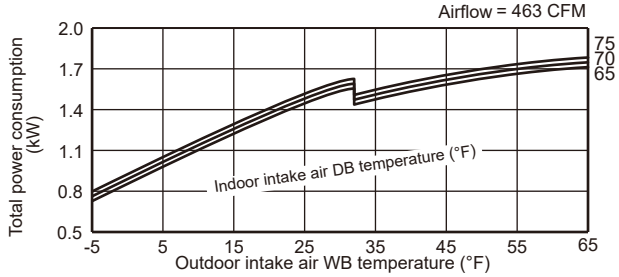

MUZ-GL18NA

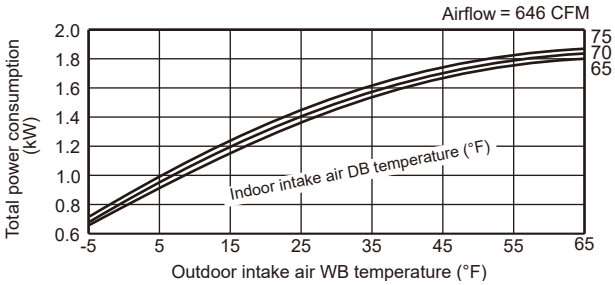

MUZ-GL18NAH

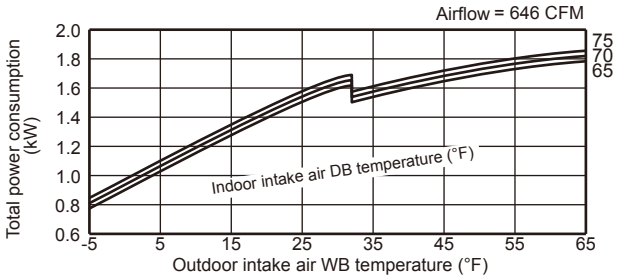

MUZ-GL24NA

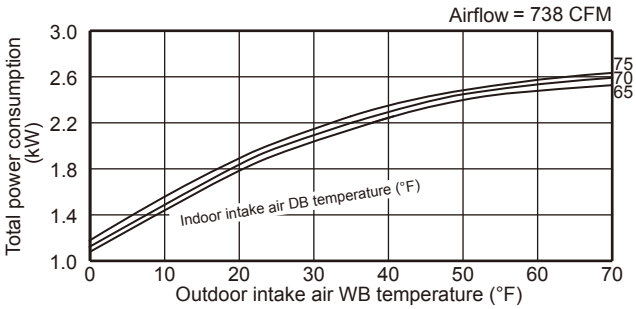

MUZ-GL24NAH

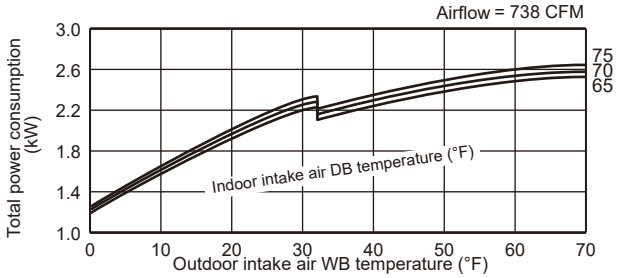

This value of frequency is not the same as the actual frequency in operating. Refer to 7-5 and 7-6 for the relationships between frequency and capacity.

7-3. CONDENSING PRESSURE

Cooling

Data are based on the condition of indoor humidity 50 %.
Airflow should be set to High speed.

MUZ-GL09NA MUZ-GL09NAH MUY-GL09NA

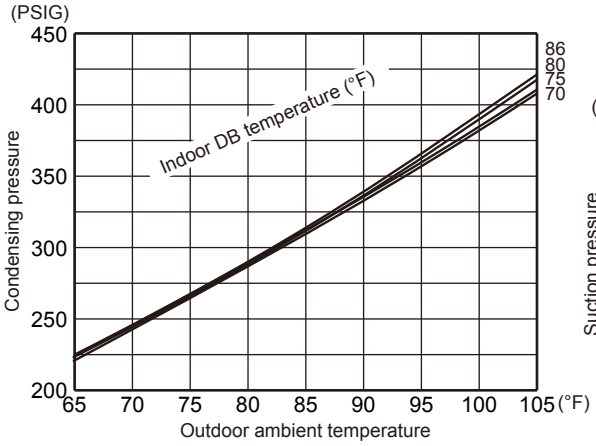

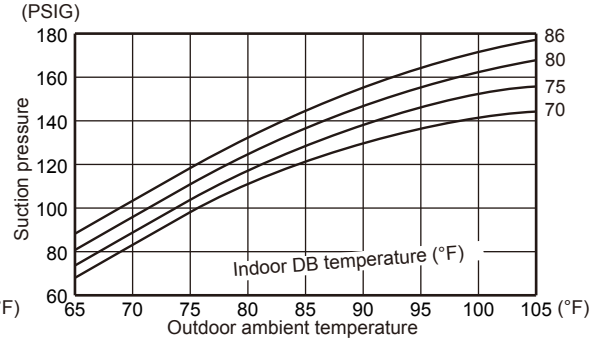

MUZ-GL12NA MUZ-GL12NAH MUY-GL12NA

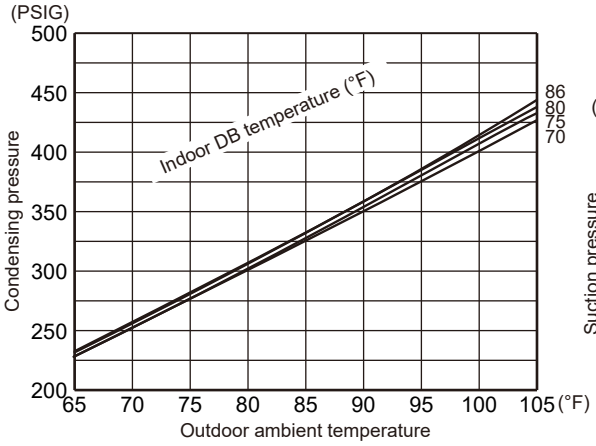

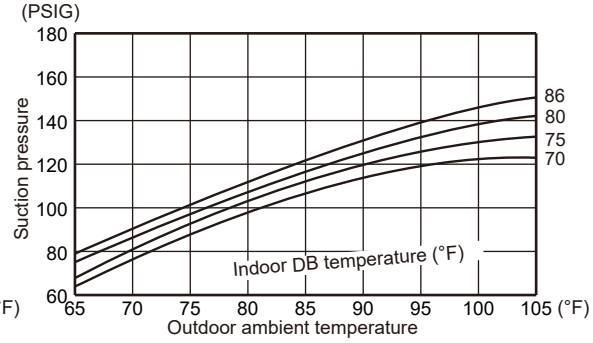

MUZ-GL15NA MUZ-GL15NAH MUY-GL15NA

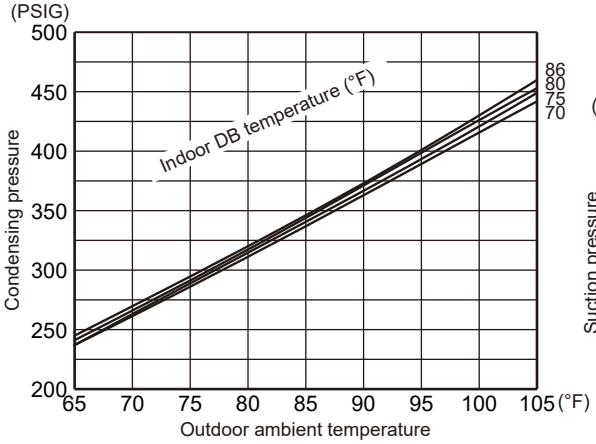

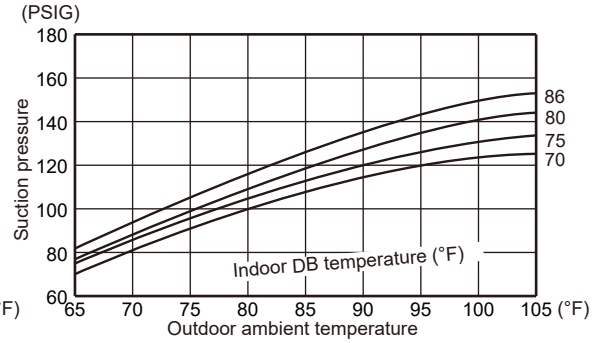

MUZ-GL18NA MUZ-GL18NAH MUY-GL18NA

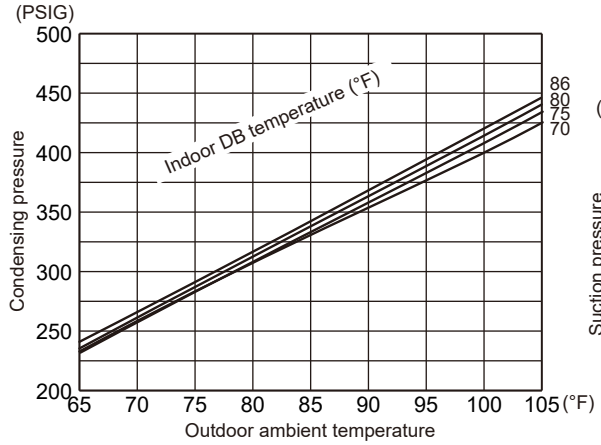

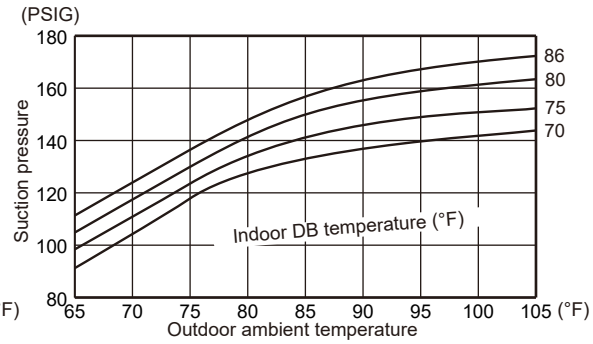

MUZ-GL24NA MUZ-GL24NAH MUY-GL24NA

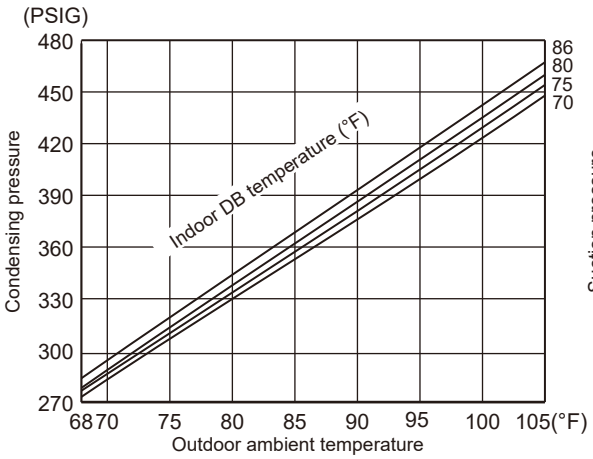

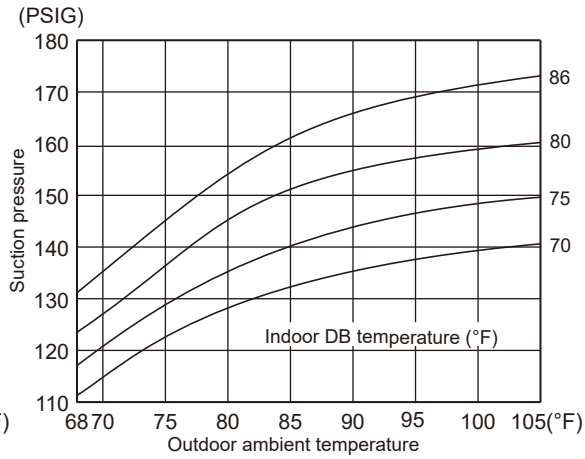

Heating

Data are based on the condition of outdoor humidity 75%.
Airflow should be set to High speed.
Data are for heating operation without any frost.

MUZ-GL09NA - U1, U2 MUZ-GL09NAH - U1, U2

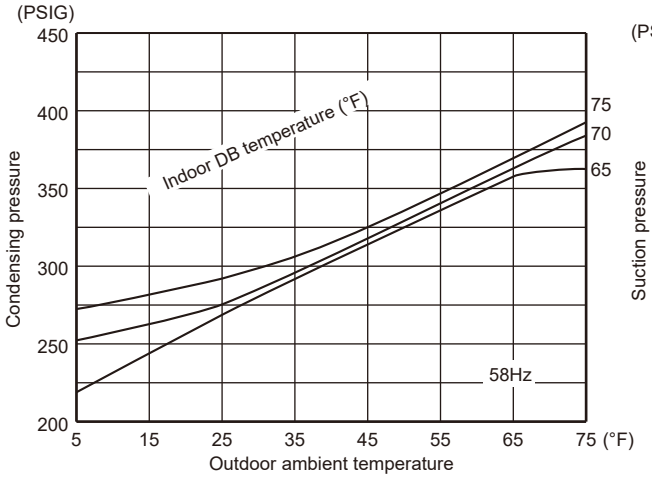

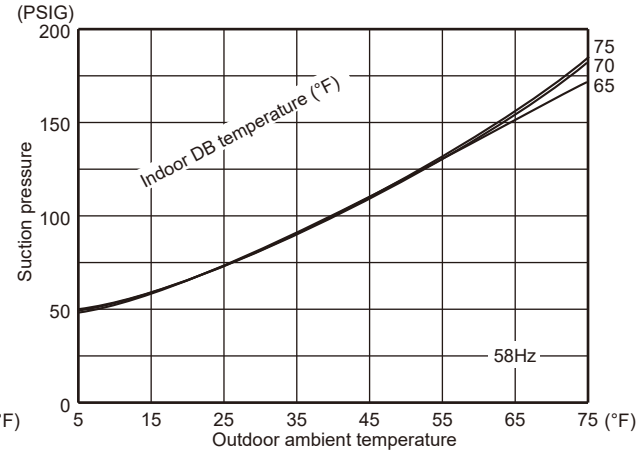

MUZ-GL09NA - U8 MUZ-GL09NAH - U8 MUZ-GL12NA MUZ-GL12NAH

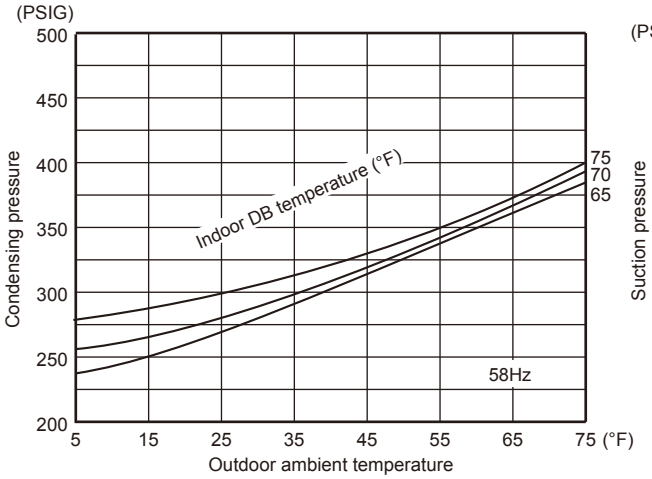

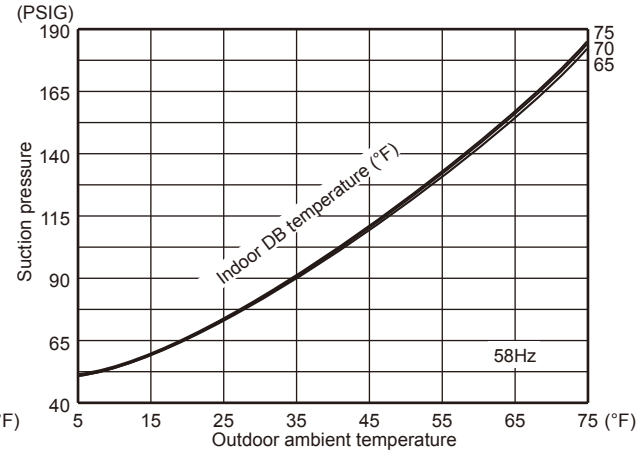

MUZ-GL15NA MUZ-GL15NAH

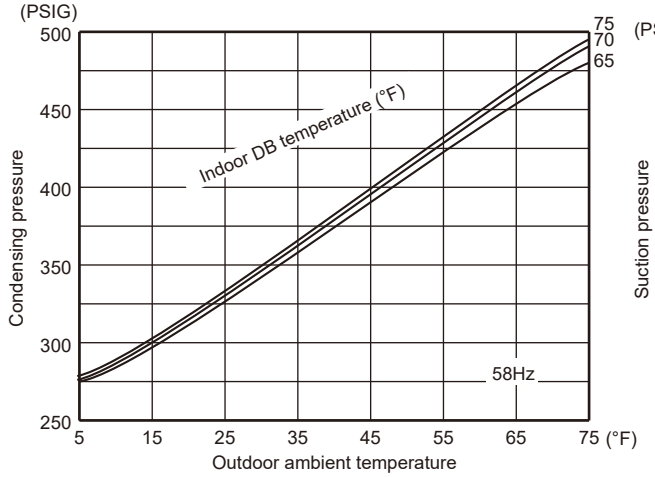

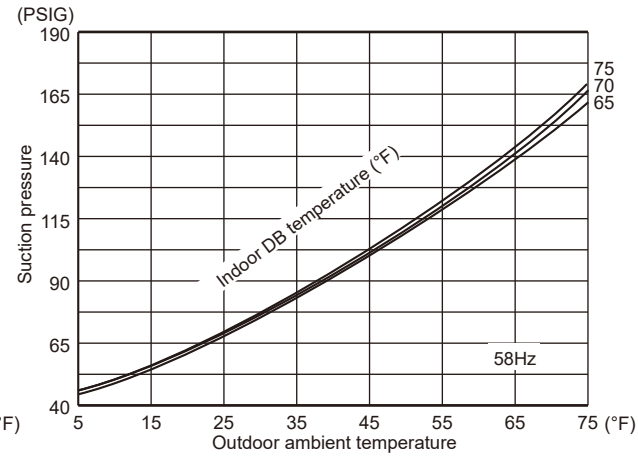

MUZ-GL18NA MUZ-GL18NAH

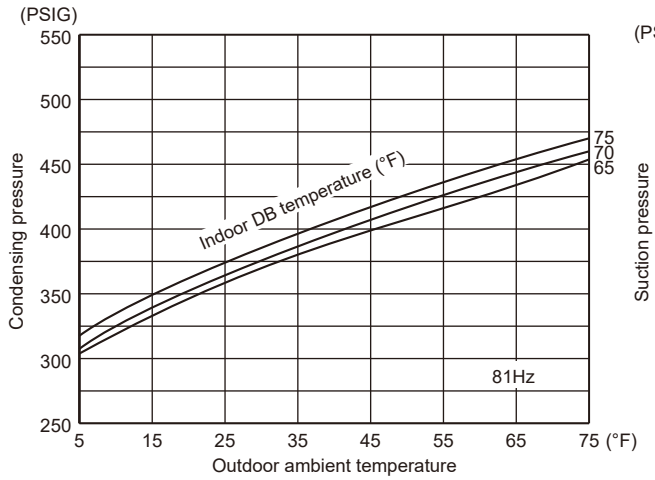

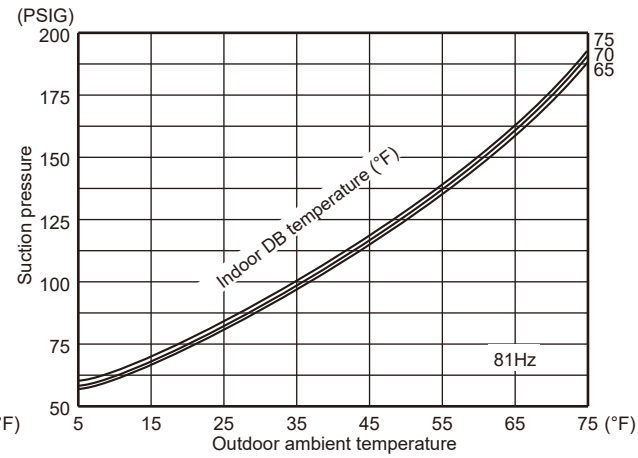

MUZ-GL24NA MUZ-GL24NAH

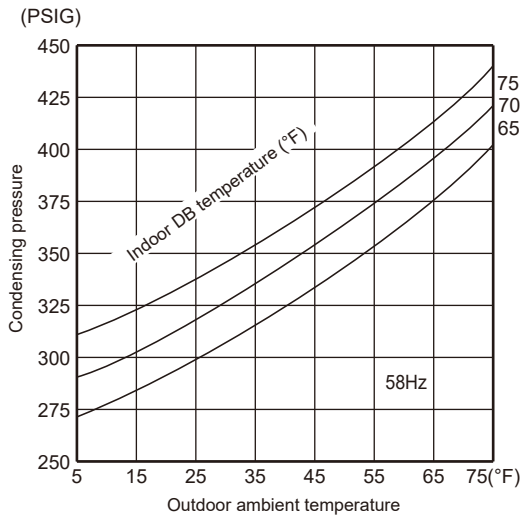

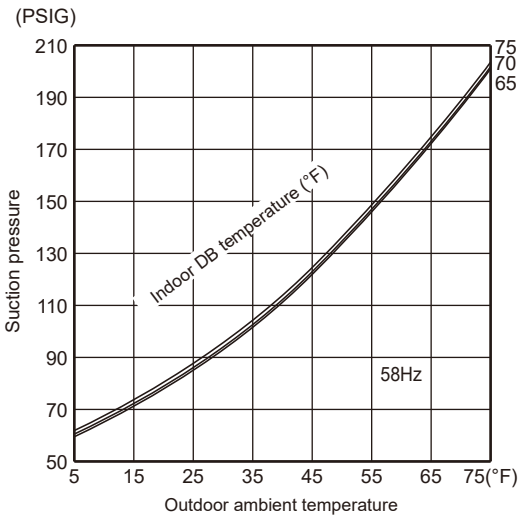

7-4. STANDARD OPERATION DATA

Model				MSZ-GL09NA - U1 MSZ-GL09NA - U2		MSZ-GL09NA - U8		MSY-GL09NA - U1 MSY-GL09NA - U2	
Item			Unit	Cooling	Heating	Cooling	Heating	Cooling	
Total	Capacity		Btu/h	9,000	10,900	9,000	10,900	9,000	
	SHF		—	0.82	—	0.82	—	0.82	
	Input		kW	0.585	0.72	0.585	0.72	0.585	
	Rated		Hz	59.5	72	48	59	59.5	
Electrical circuit	Indoor unit			**MSZ-GL09NA**		**MSZ-GL09NA**		**MSY-GL09NA**	
	Power supply		V, phase, Hz	208/230, 1, 60		208/230, 1, 60		208/230, 1, 60	
	Input		kW	0.022	0.023	0.022	0.023	0.022	
	Fan motor current		A	0.24/0.22	0.25/0.23	0.24/0.22	0.25/0.23	0.24/0.22	
	Outdoor unit			**MUZ-GL09NA - U1, U2** **MUZ-GL09NAH - U1, U2**		**MUZ-GL09NA - U8** **MUZ-GL09NAH - U8**		**MUY-GL09NA - U1**	**MUY-GL09NA - U2**
	Power supply		V, phase, Hz	208/230, 1, 60		208/230, 1, 60		208/230, 1, 60	
	Input		kW	0.563	0.697	0.563	0.697	0.563	
	Comp. current		A	2.67/2.41	3.25/2.94	2.45/2.21	3.05/2.76	2.63/2.37	
	Fan motor current		A	0.36/0.33	0.34/0.31	0.36/0.33	0.34/0.31	0.36/0.33	
Refrigerant circuit	Condensing pressure		PSIG	357	345	358	349	358	
	Suction pressure		PSIG	151	107	149	108	149	
	Discharge temperature		˚F	146	156	148	155	154	
	Condensing temperature		˚F	108	102	108	104	108	
	Suction temperature		˚F	61	44	63	44	66	
	Comp. shell bottom temperature		˚F	144	154	140	144	152	
	Ref. pipe length		ft.	25		25		25	
	Refrigerant charge (R410A)			2 lb 5 oz.		2 lb 9 oz.		2 lb 9 oz.	2 lb 5 oz.
Indoor unit	Intake air temperature	DB	˚F	80	70	80	70	80	
		WB	˚F	67	60	67	60	67	
	Discharge air temperature	DB	˚F	59	99	59	99	59	
		WB	˚F	56	—	56	—	56	
	Fan speed (High)		rpm	1,020	1,040	1,020	1,040	1,020	
	Airflow (High)		CFM	367 (Wet)	413	367 (Wet)	413	367 (Wet)	
Outdoor unit	Intake air temperature	DB	˚F	95	47	95	47	95	
		WB	˚F	—	—	—	—	—	
	Fan speed		rpm	900	860	900	860	900	
	Airflow		CFM	1,229	1,172	1,229	1,172	1,229	

Model				MSZ-GL12NA		MSY-GL12NA	MSZ-GL15NA		MSY-GL15NA
Item			Unit	Cooling	Heating	Cooling	Cooling	Heating	Cooling
Total	Capacity		Btu/h	12,000	14,400	12,000	14,000	18,000	14,000
	SHF		—	0.77	—	0.77	0.78	—	0.78
	Input		kW	0.920	1.10	0.920	1.080	1.60	1.080
	Rated		Hz	70	77	70	56.5	74	56.5
Electrical circuit	Indoor unit			MSZ-GL12NA		MSY-GL12NA	MSZ-GL15NA		MSY-GL15NA
	Power supply	V, phase, Hz		208/230, 1, 60		208/230, 1, 60	208/230, 1, 60		208/230, 1, 60
	Input		kW	0.022	0.023	0.022	0.043	0.030	0.043
	Fan motor current		A	0.24/0.22	0.25/0.23	0.24/0.22	0.43/0.39	0.34/0.31	0.43/0.39
	Outdoor unit			MUZ-GL12NA MUZ-GL12NAH		MUY-GL12NA	MUZ-GL15NA MUZ-GL15NAH		MUY-GL15NA
	Power supply	V, phase, Hz		208/230, 1, 60		208/230, 1, 60	208/230, 1, 60		208/230, 1, 60
	Input		kW	0.898	1.077	0.898	1.037	1.570	1.037
	Comp. current		A	4.01/3.62	4.86/4.39	4.01/3.62	4.51/4.08	7.11/6.43	4.51/4.08
	Fan motor current		A	0.41/0.37	0.40/0.36	0.41/0.37	0.41/0.37	0.40/0.36	0.41/0.37
Refrigerant circuit	Condensing pressure		PSIG	380	402	380	396	427	396
	Suction pressure		PSIG	133	106	133	138	98	138
	Discharge temperature		˚F	166	167	166	168	178	168
	Condensing temperature		˚F	112	115	112	115	120	115
	Suction temperature		˚F	60	35	60	61	31	61
	Comp. shell bottom temperature		˚F	152	150	152	152	158	152
	Ref. pipe length		ft.	25		25	25		25
	Refrigerant charge (R410A)			2 lb 9 oz.		2 lb 9 oz.	2 lb 9 oz.		2 lb 9 oz.
Indoor unit	Intake air temperature	DB	˚F	80	70	80	80	70	80
		WB	˚F	67	60	67	67	60	67
	Discharge air temperature	DB	˚F	57	110	57	58	114	58
		WB	˚F	55	—	55	56	—	56
	Fan speed (High)		rpm	1,020	1,040	1,020	1,280	1,140	1,280
	Airflow (High)		CFM	367 (Wet)	413	367 (Wet)	498 (Wet)	463	498 (Wet)
Outdoor unit	Intake air temperature	DB	˚F	95	47	95	95	47	95
		WB	˚F	—	43	—	—	43	—
	Fan speed		rpm	900	860	900	910	900	910
	Airflow		CFM	1,229	1,172	1,229	1,243	1,229	1,243

Model				MSZ-GL18NA		MSY-GL18NA	MSZ-GL24NA		MSY-GL24NA
Item			Unit	Cooling	Heating	Cooling	Cooling	Heating	Cooling
Total	Capacity		Btu/h	18,000	21,600	18,000	22,500	27,600	22,500
	SHF		—	0.87	—	0.87	0.75	—	0.75
	Input		kW	1.34	1.68	1.34	1.80	2.34	1.80
	Rated		Hz	69	81	69	67.5	82.0	67.5
Electrical circuit	Indoor unit			MSZ-GL18NA		MSY-GL18NA	MSZ-GL24NA		MSY-GL24NA
	Power supply		V, phase, Hz	208/230, 1, 60		208/230, 1, 60	208/230, 1, 60		208/230, 1, 60
	Input		kW	0.045		0.045	0.058		0.058
	Fan motor current		A	0.46/0.42		0.46/0.42	0.56/0.51		0.56/0.51
	Outdoor unit			MUZ-GL18NA MUZ-GL18NAH		MUY-GL18NA	MUZ-GL24NA MUZ-GL24NAH		MUY-GL24NA
	Power supply		V, phase, Hz	208/230, 1, 60		208/230, 1, 60	208/230, 1, 60		208/230, 1, 60
	Input		kW	1.295	1.635	1.295	1.742	2.282	1.742
	Comp. current		A	5.01/4.53	6.67/6.03	5.01/4.53	7.01/6.34	9.59/8.67	7.01/6.34
	Fan motor current		A	1.05/0.95	1.05/0.95	1.05/0.95	1.16/1.05	1.13/1.02	1.16/1.05
Refrigerant circuit	Condensing pressure		PSIG	377	391	377	395	405	395
	Suction pressure		PSIG	144	103	144	141	102	141
	Discharge temperature		˚F	149	178	149	158	171	158
	Condensing temperature		˚F	111	111	111	115	115	115
	Suction temperature		˚F	51	43	51	52	33	52
	Comp. shell bottom temperature		˚F	134	160	134	140	148	140
	Ref. pipe length		ft.	25		25	25		25
	Refrigerant charge (R410A)			3 lb 9 oz.		3 lb 9 oz.	4 lb 3 oz.		4 lb 3 oz.
Indoor unit	Intake air temperature	DB	˚F	80	70	80	80	70	80
		WB	˚F	67	60	67	67	60	67
	Discharge air temperature	DB	˚F	52	111	52	56	111	56
		WB	˚F	51	—	51	53	—	53
	Fan speed (High)		rpm	1,170	1,170	1,170	1,300	1,300	1,300
	Airflow (High)		CFM	581 (Wet)	646	581 (Wet)	634 (Wet)	738	634 (Wet)
Outdoor unit	Intake air temperature	DB	˚F	95	47	95	95	47	95
		WB	˚F	—	43	—	—	43	—
	Fan speed		rpm	810	810	810	840	810	840
	Airflow		CFM	1,691	1,691	1,691	1,769	1,701	1,769

7-5. CAPACITY AND INPUT CORRECTION BY INVERTER OUTPUT FREQUENCY

MUZ-GL09NA - U1, U2 MUZ-GL09NAH- U1, U2

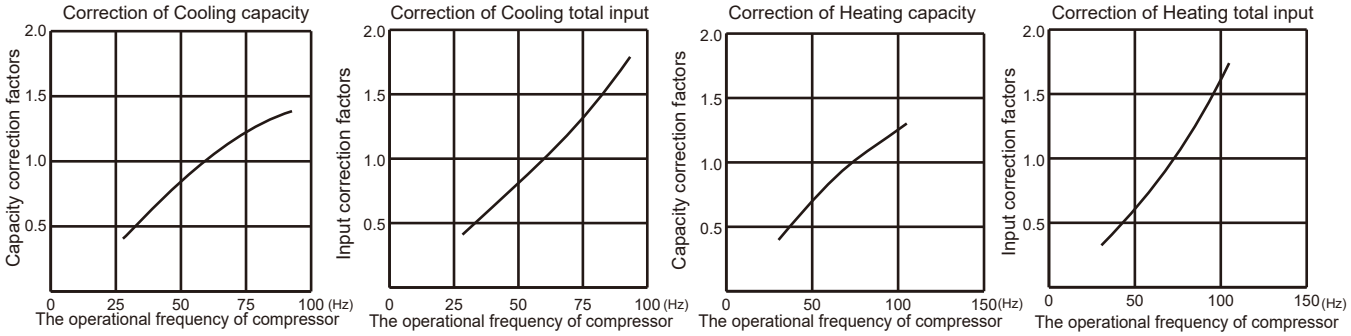

MUY-GL09NA

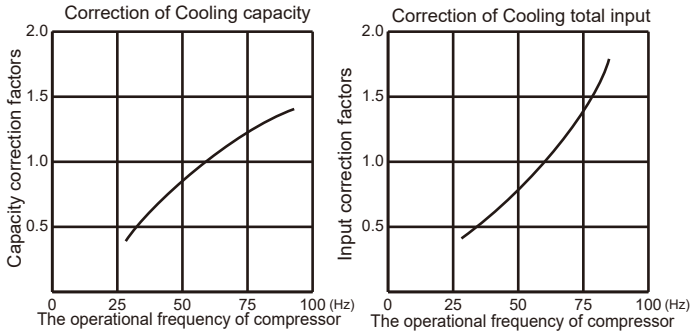

MUZ-GL09NA - U8 MUZ-GL09NAH - U8

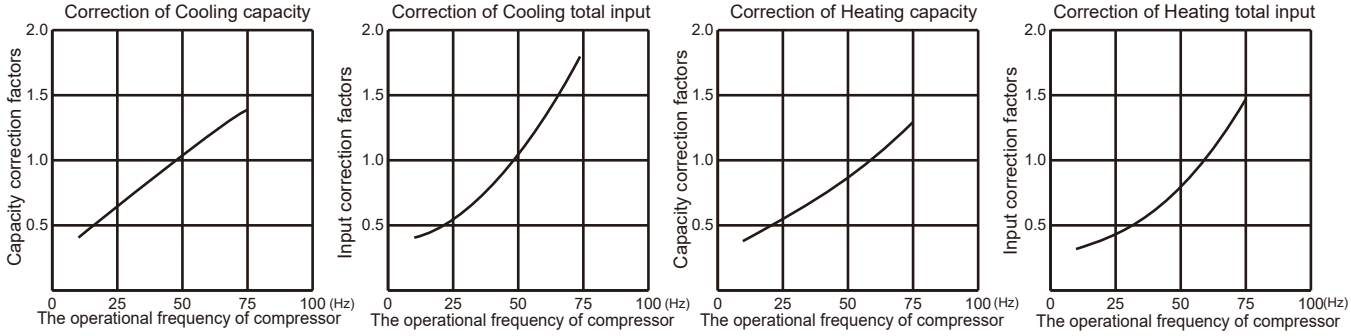

MUZ-GL12NA MUZ-GL12NAH MUY-GL12NA

MUZ-GL12NA MUZ-GL12NAH

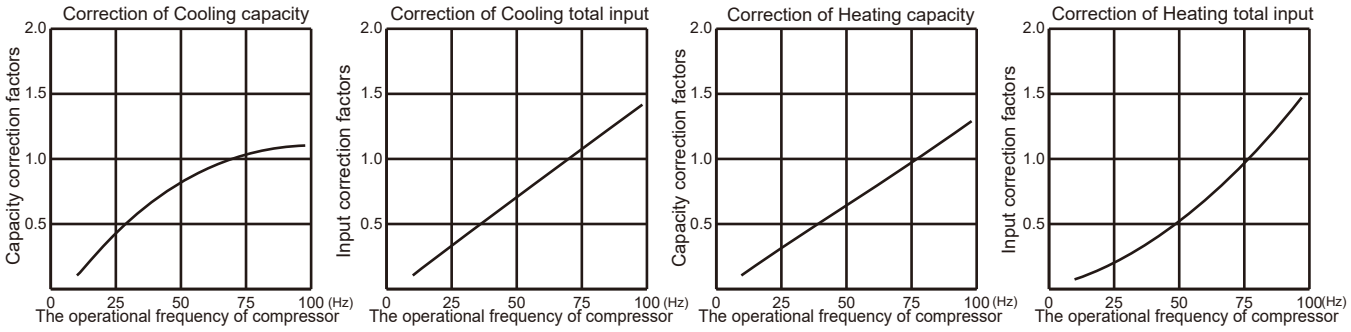

MUZ-GL15NA MUZ-GL15NAH MUY-GL15NA

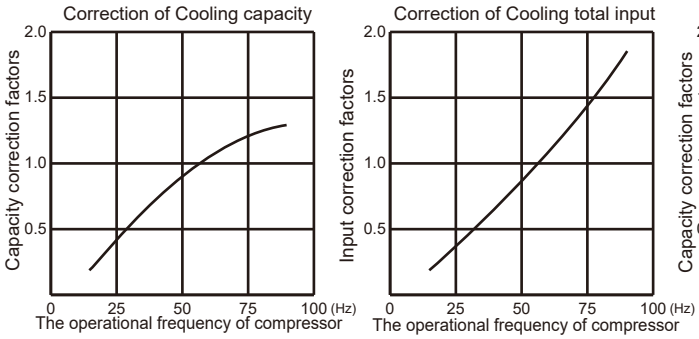

MUZ-GL15NA MUZ-GL15NAH

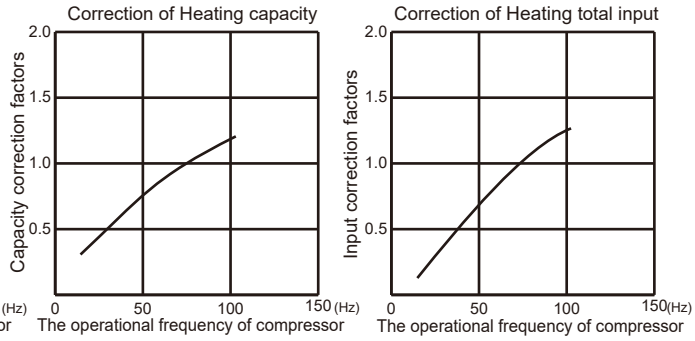

MUZ-GL18NA MUZ-GL18NAH MUY-GL18NA

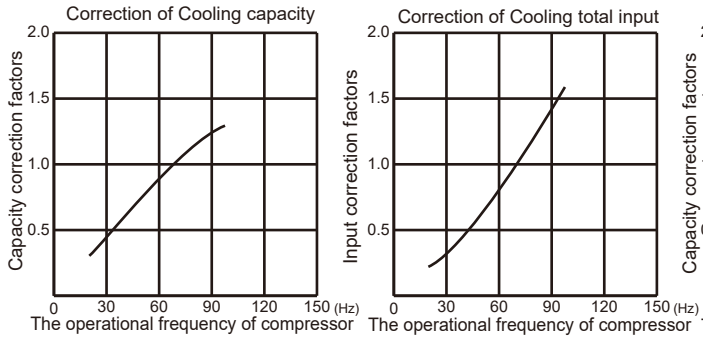

MUZ-GL18NA MUZ-GL18NAH

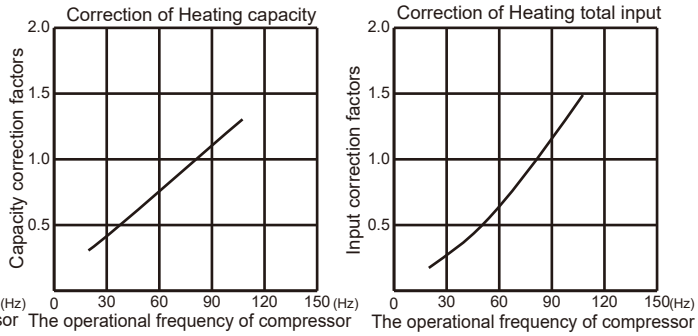

MUZ-GL24NA MUZ-GL24NAH MUY-GL24NA

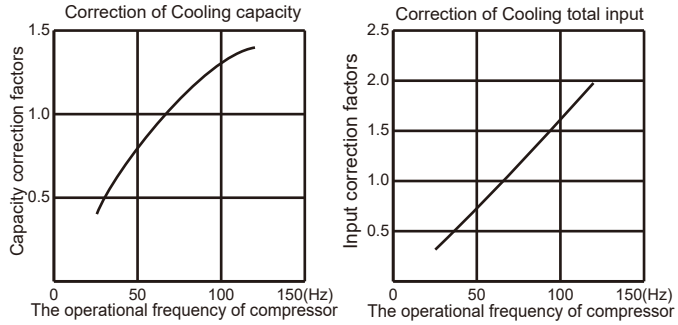

MUZ-GL24NA MUZ-GL24NAH

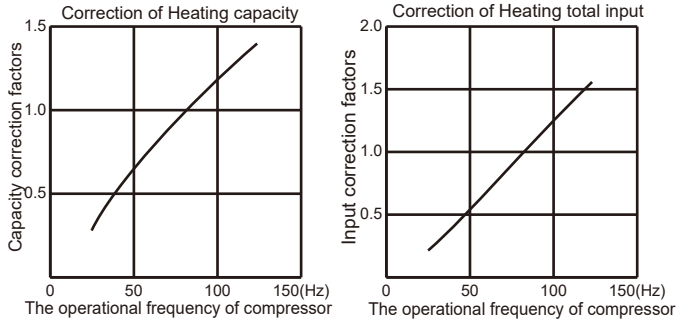

7-6. HOW TO OPERATE FIXED-FREQUENCY OPERATION (Test run operation)

1. Press EMERGENCY OPERATION switch to start COOL or HEAT mode (COOL: Press once, HEAT: Press twice).
2. Test run operation starts and continues to operate for 30 minutes.
3. Compressor operates at rated frequency in COOL mode or 58 Hz in HEAT mode.
4. Indoor fan operates at High speed.
5. After 30 minutes, test run operation finishes and EMERGENCY OPERATION starts (operation frequency of compressor varies).
6. To cancel test run operation (EMERGENCY OPERATION), press EMERGENCY OPERATION switch or any button on the remote controller.

8 ACTUATOR CONTROL

MUZ-GL09NA MUZ-GL09NAH MUY-GL09NA
MUZ-GL12NA MUZ-GL12NAH MUY-GL12NA
MUZ-GL15NA MUZ-GL15NAH MUY-GL15NA
MUZ-GL18NA MUZ-GL18NAH MUY-GL18NA
MUZ-GL24NA MUZ-GL24NAH MUY-GL24NA

8-1. OUTDOOR FAN MOTOR CONTROL

The fan motor turns ON/OFF, interlocking with the compressor.
[ON] The fan motor turns ON 5 seconds before the compressor starts up.
[OFF] The fan motor turns OFF 15 seconds after the compressor has stopped running.

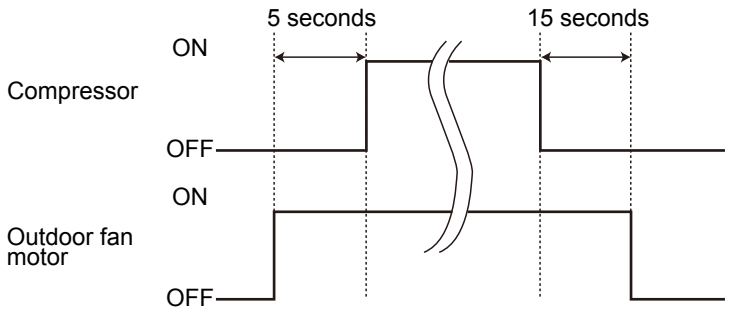

8-2. R.V. COIL CONTROL (MUZ)

Heating · · · · · · · · · · · · · · · · · · ON
Cooling · · · · · · · · · · · · · · · · · · OFF
Dry · OFF

NOTE: The 4-way valve reverses for 5 seconds right before startup of the compressor.

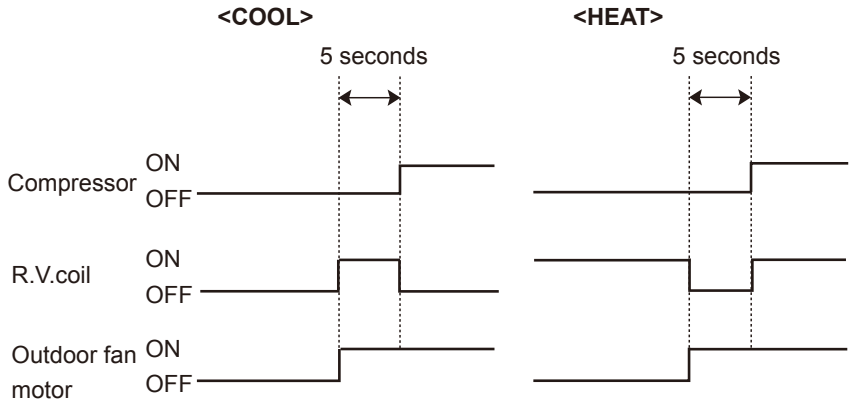

8-3. RELATION BETWEEN MAIN SENSOR AND ACTUATOR

Sensor	Purpose	Actuator					
		Compressor	LEV	Outdoor fan motor	R.V.coil	Indoor fan motor	Defrost heater *
Discharge temperature thermistor	Protection	○	○				
Indoor coil temperature thermistor	Cooling: Coil frost prevention	○					
	Heating: High pressure protection	○	○				
Defrost thermistor **(MUZ)**	Heating: Defrosting	○	○	○	○	○	
Fin temperature thermistor	Protection	○		○			
Ambient temperature thermistor	Cooling: Low ambient temperature operation	○	○	○			
	Heating: Defrosting (Heater)						○
Outdoor heat exchanger temperature thermistor	Cooling: Low ambient temperature operation	○	○	○			
	Cooling: High pressure protection	○	○	○			

*. **MUZ-GL•NAH** only.

9 SERVICE FUNCTIONS

MUZ-GL09NA MUZ-GL09NAH MUY-GL09NA
MUZ-GL12NA MUZ-GL12NAH MUY-GL12NA
MUZ-GL15NA MUZ-GL15NAH MUY-GL15NA
MUZ-GL18NA MUZ-GL18NAH MUY-GL18NA
MUZ-GL24NA MUZ-GL24NAH MUY-GL24NA

9-1. CHANGE IN DEFROST SETTING (MUZ)

Changing defrost finish temperature

<JS> To change the defrost finish temperature, cut/solder the JS wire of the outdoor inverter P.C. board (Refer to 10-6.1.).

Jumper		Defrost finish temperature	
		MUZ-GL09/12/15NA MUZ-GL09/12/15NAH	MUZ-GL18/24NA MUZ-GL18/24NAH
JS	Soldered (Initial setting)	41°F (5°C)	50°F (10°C)
	None (Cut)	50°F (10°C)	64°F (18°C)

9-2. PRE-HEAT CONTROL SETTING (MUZ)

MUZ-GL09/12/15/18

When moisture gets into the refrigerant cycle, it may interfere with the startup of the compressor at low outside temperature. The pre-heat control prevents this interference. The pre-heat control turns ON when the discharge temperature thermistor is 68°F (20°C) or below. When the pre-heat control turns ON, the compressor is energized. (About 50 W)

MUZ-GL24

Prolonged low load operation, in which the thermostat is OFF for a long time, at low outside temperature [32°F (0°C) or less] may cause the following troubles. The pre-heat control prevents those troubles.
1) If moisture gets into the refrigerant cycle and freezes, it may interfere the startup of the compressor.
2) If liquid refrigerant collects in the compressor, a failure in the compressor may occur.
The pre-heat control turns ON when the compressor temperature is 68°F (20°C) or below. When the pre-heat control turns ON, the compressor is energized. (About 70 W)

Pre-heat control setting

<JK>
ON: To activate the pre-heat control, cut JK wire of the inverter P.C. board.
OFF: To deactivate the pre-heat control, solder JK wire of the inverter P.C. board.
(Refer to 10-6.1)

Jumper		Pre-heat control setting	
		MUZ-GL09/12/15/18NA MUZ-GL09/12/15/18NAH	MUZ-GL24NA MUZ-GL24NAH
JK	Soldered	Deactivated (Initial setting)	Deactivated
	Cut	Activated	Activated (Initial setting)

NOTE: When the inverter P.C. board is replaced, check the JK wire, and cut/solder them if necessary.

10 TROUBLESHOOTING

MUZ-GL09NA MUZ-GL09NAH MUY-GL09NA
MUZ-GL12NA MUZ-GL12NAH MUY-GL12NA
MUZ-GL15NA MUZ-GL15NAH MUY-GL15NA
MUZ-GL18NA MUZ-GL18NAH MUY-GL18NA
MUZ-GL24NA MUZ-GL24NAH MUY-GL24NA

10-1. CAUTIONS ON TROUBLESHOOTING

1. Before troubleshooting, check the following

1) Check the power supply voltage.
2) Check the indoor/outdoor connecting wire for miswiring.

2. Take care of the following during servicing

1) Before servicing the air conditioner, be sure to turn OFF the main unit first with the remote controller, then after confirming the horizontal vane is closed, turn off the breaker and/or disconnect the power plug.
2) Be sure to turn OFF the power supply before removing the front panel, the cabinet, the top panel, and the electronic control P.C. board.
3) When removing the electrical parts, be careful of the residual voltage of smoothing capacitor.
4) When removing the electronic control P.C. board, hold the edge of the board with care NOT to apply stress on the components.
5) When connecting or disconnecting the connectors, hold the connector housing. DO NOT pull the lead wires.

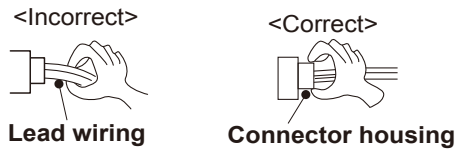

3. Troubleshooting procedure

1) Check if the OPERATION INDICATOR lamp on the indoor unit is blinking on and off to indicate an abnormality. To make sure, check how many times the OPERATION INDICATOR lamp is blinking on and off before starting service work. (See the service manual of the indoor unit for a description of those failure codes.)
2) Before servicing, verify that all connectors and terminals are connected properly.
3) When the electronic control P.C. board seems to be defective, check for disconnection of the copper foil pattern and burnt or discolored components.
4) Refer to 10-2 and 10-3.

10-2. FAILURE MODE RECALL FUNCTION

Outline of the function

This air conditioner can memorize the abnormal condition which has occurred once.

Even though LED indication listed on the troubleshooting check table (10-3.) disappears, the memorized failure details can be recalled.

1. Flow chart of failure mode recall function for the indoor/outdoor unit

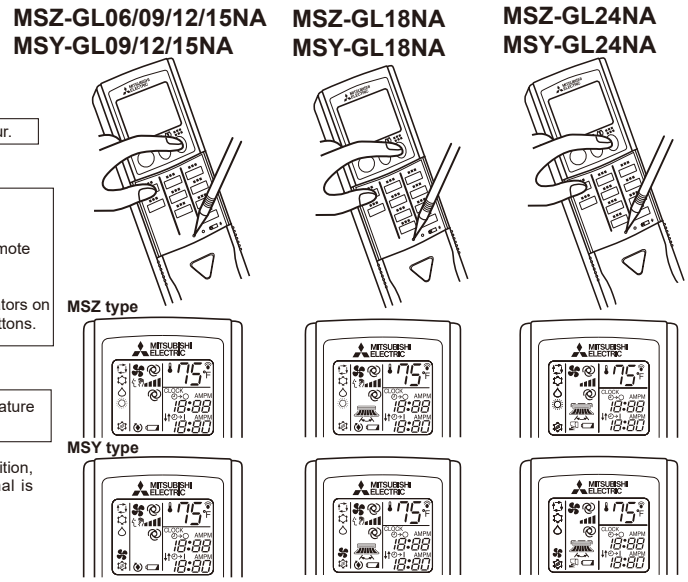

Operational procedure

The cause of abnormality cannot be found because the abnormality does not recur.

Setting up the failure mode recall function

Turn ON the power supply.
<Preparation of the remote controller>
① While pressing OPERATION SELECT button and TOO COOL button on the remote controller at the same time, press RESET button.
② First, release RESET button.
Hold down the other 2 buttons for another 3 seconds. Make sure that the indicators on the LCD screen shown in the right figure are all displayed. Then release the buttons.

Press STOP/OPERATE (OFF/ON) button of the remote controller (the set temperature is displayed) with the remote controller headed towards the indoor unit. *1

*1. Regardless of normal or abnormal condition, a short beep is emitted once the signal is received.

Does the upper lamp of the OPERATION INDICATOR lamp on the indoor unit blink at the interval of 0.5 seconds?
Blinks: Either indoor or outdoor unit is abnormal. Beep is emitted at the same timing as the blinking of the upper lamp of the OPERATION INDICATOR lamp. *2

No (OFF) → Indoor unit is normal.
But the outdoor unit might be abnormal because there are some abnormalities that cannot be recalled with this way.
Check if outdoor unit is abnormal according to the detailed outdoor unit failure mode recall function. (Refer to 10-2.2)

Yes (Blinks)

Judgment of indoor/outdoor abnormality

Before blinking, does the upper lamp of the OPERATION INDICATOR lamp stay ON for 3 seconds?
When it stays ON for 3 seconds (without beep): The outdoor unit is abnormal.

Yes → The outdoor unit is abnormal.
Check the blinking pattern, and identify the abnormal point by referring to the table of outdoor unit failure mode recall function. (Refer to 10-2.3)
Make sure to check at least 2 consecutive blinking cycles. *3

No → The indoor unit is abnormal.
Check the blinking pattern, and identify the abnormal point by referring to the table of indoor unit failure mode recall function. (Refer to indoor unit service manual.) Make sure to check at least 2 consecutive blinking cycles. *2

Releasing the failure mode recall function

Release the failure mode recall function by the following procedures.
Turn OFF the power supply and turn it ON again.
Press RESET button of the remote controller.

Repair the failure parts.

Deleting the memorized abnormal condition

① After repairing the unit, recall the failure mode again according to "Setting up the failure mode recall function" mentioned above.
② Press STOP/OPERATE (OFF/ON) button of the remote controller (the set temperature is displayed) with the remote controller headed towards the indoor unit.
③ Press EMERGENCY OPERATION switch so that the memorized abnormal condition is deleted.
④ Release the failure mode recall function according to "Releasing the failure mode recall function" mentioned above.

NOTE: 1. Make sure to release the failure mode recall function after it is set up, otherwise the unit cannot operate properly.
2. If the abnormal condition is not deleted from the memory, the last abnormal condition is kept memorized.

*2. Blinking pattern when the indoor unit is abnormal:

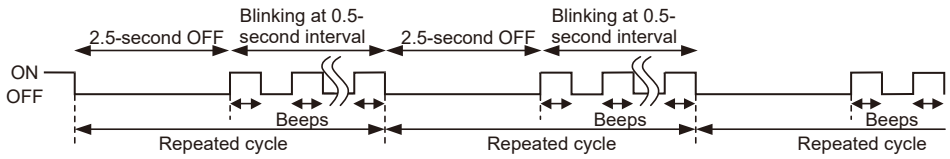

*3.Blinking pattern when the outdoor unit is abnormal:

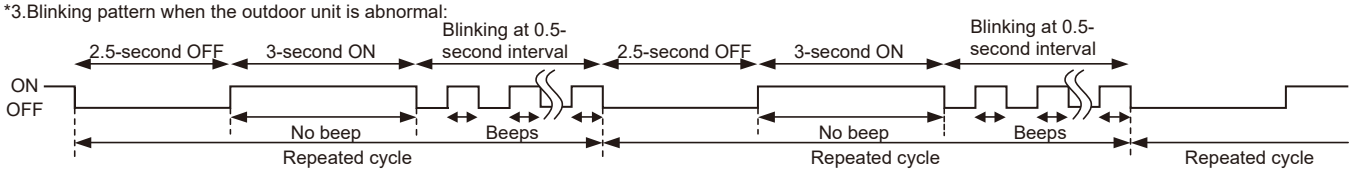

2. Flow chart of the detailed outdoor unit failure mode recall function

Operational procedure

The outdoor unit might be abnormal.
Check if outdoor unit is abnormal according to the following procedures.

↓

Make sure that the remote controller is set to the failure mode recall function.

↓

With the remote controller headed towards the indoor unit, press TOO COOL button to adjust the set temperature to 77°F (25°C). *1

*1. Regardless of normal or abnormal condition, 2 short beeps are emitted as the signal is received.

↓

Does the upper lamp of the OPERATION INDICATOR lamp on the indoor unit blink at the interval of 0.5 seconds?
Blinks: The outdoor unit is abnormal. Beep is emitted at the same timing as the blinking of the upper lamp of the OPERATION INDICATOR lamp. *2

No (OFF) → The outdoor unit is normal. → Release the failure mode recall function according to the left mentioned procedure.

Yes (Blinks) ↓

The outdoor unit is abnormal.
Check the blinking pattern, and identify the abnormal point by referring to the table of outdoor unit failure mode recall function (10-2.3.).
Make sure to check at least 2 consecutive blinking cycles. *2

↓

Releasing the failure mode recall function

Release the failure mode recall function by the following procedures.
Turn OFF the power supply and turn it ON again.
Press RESET button of the remote controller.

↓

Repair the failure parts.

↓

Deleting the memorized abnormal condition

① After repairing the unit, recall the failure mode again according to "Setting up the failure mode recall function" (10-2.1.).
② Press STOP/OPERATE (OFF/ON) button of the remote controller (the set temperature is displayed) with the remote controller headed towards the indoor unit.
③ Press EMERGENCY OPERATION switch so that the memorized abnormal condition is deleted.
④ Release the failure mode recall function according to "Releasing the failure mode recall function" mentioned above.

NOTE: 1. Make sure to release the failure mode recall function after it is set up, otherwise the unit cannot operate properly.
2. If the abnormal condition is not deleted from the memory, the last abnormal condition is kept memorized.

*2.Blinking pattern when outdoor unit is abnormal:

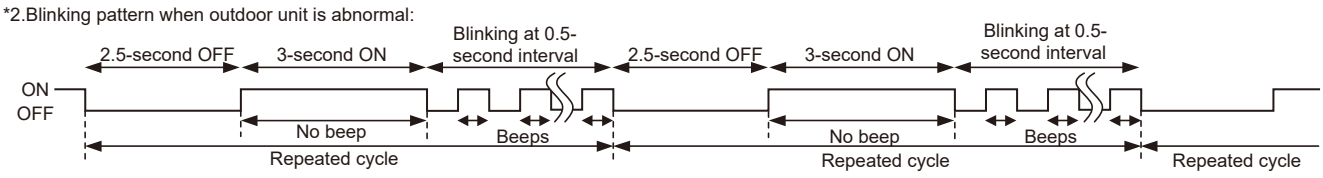

NOTE: Blinking patterns of this mode differ from the ones of TROUBLESHOOTING CHECK TABLE (10-3.).

3. Table of outdoor unit failure mode recall function

The upper lamp of the OPERATION INDICATOR lamp (Indoor unit)	Abnormal point (Failure mode/protection)	LED indication (Outdoor P.C. board)	Condition	Remedy	Indoor/outdoor unit failure mode recall function	Outdoor unit failure mode recall function
OFF	None (Normal)	—	—	—	—	—
1-time blink 2.5 seconds OFF	Indoor/outdoor communication, receiving error	—	Any signals from the inverter P.C. board cannot be received normally for 3 minutes.	•Refer to 10-5. Ⓜ How to check miswiring and serial signal error.	○	○
	Indoor/outdoor communication, receiving error	—	Although the inverter P.C. board sends signal "0", signal "1" has been received 30 consecutive times.	•Refer to 10-5. Ⓜ How to check miswiring and serial signal error.		
2-time blink 2.5 seconds OFF	Outdoor power system	—	Overcurrent protection cut-out operates 3 consecutive times within 1 minute after the compressor gets started.	•Reconnect connectors. •Refer to 10-5. Ⓐ"How to check inverter/ compressor". •Check stop valve.	○	○
3-time blink 2.5 seconds OFF	Discharge temperature thermistor	1-time blink every 2.5 seconds	Thermistor shorts or opens during compressor running.	•Refer to 10-5.Ⓖ "Check of outdoor thermistors". Defective outdoor thermistors can be identified by checking the blinking pattern of LED.	○	○
	Defrost thermistor					
	Fin temperature thermistor	3-time blink 2.5 seconds OFF				
	P.C. board temperature thermistor	4-time blink 2.5 seconds OFF				
	Ambient temperature thermistor	2-time blink 2.5 seconds OFF				
	Outdoor heat exchanger temperature thermistor	—				
4-time blink 2.5 seconds OFF	Overcurrent	11-time blink 2.5 seconds OFF	Large current flows into the power module (IC700) (**MUZ-GL09/12/15/18, MUY-GL09/12/15/18**)/ IGBT module (IC700) (**MUZ-GL24, MUY-GL24**).	•Reconnect compressor connector. •Refer to 10-5.Ⓐ"How to check inverter/ compressor". •Check stop valve.	—	○
	Compressor synchronous abnormality (Compressor startup failure protection)	12-time blink 2.5 seconds OFF	Waveform of compressor current is distorted.	•Reconnect compressor connector. •Refer to 10-5.Ⓐ"How to check inverter/ compressor".	—	○
5-time blink 2.5 seconds OFF	Discharge temperature	—	Temperature of discharge temperature thermistor exceeds 241°F (116°C), compressor stops. Compressor can restart if discharge temperature thermistor reads 212°F (100°C) or less 3 minutes later.	•Check refrigerant circuit and refrigerant amount. •Refer to 10-5.Ⓚ"Check of LEV".	—	○
6-time blink 2.5 seconds OFF	High pressure	—	Temperature indoor coil thermistor exceeds 158°F (70°C) in HEAT mode. Temperature defrost thermistor exceeds 158°F (70°C) in COOL mode.	•Check refrigerant circuit and refrigerant amount. •Check stop valve.	—	○
7-time blink 2.5 seconds OFF	Fin temperature/ P.C. board temperature	7-time blink 2.5 seconds OFF	Temperature of the fin temperature thermistor on the inverter P.C. board exceeds 167 - 187°F (75 - 86°C) (**MUZ-GL09/12/15/18, MUY-GL09/12/15/18**)/167 - 176°F (75 - 80°C) (**MUZ-GL24, MUY-GL24**), or temperature of P.C. board temperature thermistor on the inverter P.C. board exceeds 162 - 185°F (72 - 85°C) (**MUZ-GL09/12/15/18, MUY-GL09/12/15/18**)/158 - 167°F (70 - 75°C) (**MUZ-GL24, MUY-GL24**).	•Check around outdoor unit. •Check outdoor unit air passage. •Refer to 10-5.Ⓘ"Check of outdoor fan motor".	—	○
8-time blink 2.5 seconds OFF	Outdoor fan motor	—	Outdoor fan has stopped 3 times in a row within 30 seconds after outdoor fan startup.	•Refer to 10-5.Ⓘ"Check of outdoor fan motor". Refer to 10-5.Ⓛ"Check of inverter P.C. board".	—	○
9-time blink 2.5 seconds OFF	Non-volatile memory data	5-time blink 2.5 seconds OFF	Non-volatile memory data cannot be read properly.	•Replace the inverter P.C. board.	○	○
	Power module (IC700) (**MUZ-GL09/12/15/18, MUY-GL09/12/15/18**) IGBT module (IC700) (**MUZ-GL24, MUY-GL24**)	6-time blink 2.5 seconds OFF	The interface short circuit occurs in the output of the power module (IC700) (**MUZ-GL09/12/15/18, MUY-GL09/12/15/18**)/IGBT module (IC700) (**MUZ-GL24, MUY-GL24**). The compressor winding shorts circuit.	•Refer to 10-5. Ⓐ"How to check inverter/ compressor".	—	

NOTE: Blinking patterns of this mode differ from the ones of TROUBLESHOOTING CHECK TABLE (10-3.).

The upper lamp of the OPERATION INDICATOR lamp (Indoor unit)	Abnormal point (Failure mode/protection)	LED indication (Outdoor P.C. board)	Condition	Remedy	Indoor/outdoor unit failure mode recall function	Outdoor unit failure mode recall function
10-time blink 2.5 seconds OFF	Discharge temperature	—	Temperature of discharge temperature thermistor has been 122°F (50°C) or less for 20 minutes.	•Refer to 10-5.Ⓚ"Check of LEV". •Check refrigerant circuit and refrigerant amount.	—	○
11-time blink 2.5 seconds OFF	Bus-bar voltage (DC)	8-time blink 2.5 seconds OFF	Bus-bar voltage of inverter cannot be detected normally.	•Refer to 10-5.Ⓐ"How to check inverter/ compressor".	—	○
	Each phase current of compressor	9-time blink 2.5 seconds OFF	Each phase current of compressor cannot be detected normally.			
14-time blink 2.5 seconds OFF	Stop valve (Closed valve)	14-time blink 2.5 seconds OFF	Closed valve is detected by compressor current.	•Check stop valve.	○	○
	4-way valve/ Pipe temperature	16-time blink 2.5 seconds OFF	The 4-way valve does not work properly. The indoor coil thermistor detects an abnormal temperature.	•Check the 4-way valve. •Replace the inverter P.C. board.		
16-time blink 2.5 seconds OFF	Outdoor refrigerant system abnormality	1-time blink 2.5 seconds OFF	A closed valve and air trapped in the refrigerant circuit are detected based on the temperature sensed by the indoor and outdoor thermistors and the current of the compressor.	•Check for a gas leak in a connecting piping etc. •Check the stop valve. •Refer to 10-5. Ⓞ "Check of outdoor refrigerant circuit".	○	○

10-3. TROUBLESHOOTING CHECK TABLE

No.	Symptom	LED indication	Abnormal point/ Condition	Condition	Remedy
1	Outdoor unit does not operate.	1-time blink every 2.5 seconds	Outdoor power system	Overcurrent protection cut-out operates 3 consecutive times within 1 minute after the compressor gets started.	•Reconnect connector of compressor. •Refer to 10-5.Ⓐ "How to check inverter/compressor". •Check stop valve.
2			Outdoor thermistors	Discharge temperature thermistor, fin temperature thermistor, defrost thermistor, P.C. board temperature thermistor, outdoor heat exchanger temperature thermistor or ambient temperature thermistor shorts or opens during compressor running.	•Refer to 10-5.Ⓖ "Check of outdoor thermistors".
3			Outdoor control system	Nonvolatile memory data cannot be read properly. (The upper lamp of the OPERATION INDICATOR lamp on the indoor unit lights up or blinks 7-time.)	•Replace inverter P.C. board.
4		6-time blink 2.5 seconds OFF	Serial signal	The communication fails between the indoor and outdoor unit for 3 minutes.	•Refer to 10-5.Ⓜ "How to check miswiring and serial signal error.
5		11-time blink 2.5 seconds OFF	Stop valve/ Closed valve	Closed valve is detected by compressor current.	•Check stop valve.
6		16-time blink 2.5 seconds OFF	4-way valve/ Pipe temperature	The 4-way valve does not work properly. The indoor coil thermistor detects an abnormal temperature.	•Refer to 10-5.Ⓗ "Check of R.V. coil". •Replace the inverter P.C. board.
7		17-time blink 2.5 seconds OFF	Outdoor refrigerant system abnormality	A closed valve and air trapped in the refrigerant circuit are detected based on the temperature sensed by the indoor and outdoor thermistors and the current of the compressor.	•Check for a gas leak in a connecting piping etc. •Check the stop valve. •Refer to 10-5. Ⓓ "Check of outdoor refrigerant circuit".
8	'Outdoor unit stops and restarts 3 minutes later' is repeated.	2-time blink 2.5 seconds OFF	Overcurrent protection	Large current flows into the power module (IC700) (**MUZ-GL09/12/15/18, MUY-GL09/12/15/18**)/ IGBT module (IC700) (**MUZ-GL24, MUY-GL24**).	•Reconnect connector of compressor. •Refer to 10-5.Ⓐ "How to check inverter/compressor". •Check stop valve.
9		3-time blink 2.5 seconds OFF	Discharge temperature overheat protection	Temperature of discharge temperature thermistor exceeds 241°F (116°C), compressor stops. Compressor can restart if discharge temperature thermistor reads 212°F (100°C) or less 3 minutes later.	•Check refrigerant circuit and refrigerant amount. •Refer to 10-5.Ⓚ "Check of LEV".
10		4-time blink 2.5 seconds OFF	Fin temperature /P.C. board temperature thermistor overheat protection	Temperature of the fin temperature thermistor on the heat sink exceeds 167 - 187°F (75 - 86°C) (**MUZ-GL09/12/15/18, MUY-GL09/12/15/18**)/167 - 176°F (75 - 80°C) (**MUZ-GL24, MUY-GL24**) or temperature of P.C. board temperature thermistor on the inverter P.C.board exceeds 162 - 185°F (72 - 85°C) (**MUZ-GL09/12/15/18, MUY-GL09/12/15/18**)/158 - 167°F (70 - 75°C) (**MUZ-GL24, MUY-GL24**).	•Check around outdoor unit. •Check outdoor unit air passage. •Refer to 10-5.Ⓘ "Check of outdoor fan motor".
11		5-time blink 2.5 seconds OFF	High pressure protection	Indoor coil thermistor exceeds 158°F (70°C) in HEAT mode. Defrost thermistor exceeds 158°F (70°C) in COOL mode.	•Check refrigerant circuit and refrigerant amount. •Check stop valve.
12		8-time blink 2.5 seconds OFF	Compressor synchronous abnormality	The waveform of compressor current is distorted.	•Reconnect connector of compressor. •Refer to 10-5.Ⓐ "How to check inverter/compressor".
13		10-time blink 2.5 seconds OFF	Outdoor fan motor	Outdoor fan has stopped 3 times in a row within 30 seconds after outdoor fan startup.	•Refer to 10-5.Ⓘ "Check of outdoor fan motor. •Refer to 10-5.Ⓛ "Check of inverter P.C. board.
14		12-time blink 2.5 seconds OFF	Each phase current of compressor	Each phase current of compressor cannot be detected normally.	•Refer to 10-5.Ⓐ "How to check inverter/compressor".
15		13-time blink 2.5 seconds OFF	Bus-bar voltage (DC)	Bus-bar voltage of inverter cannot be detected normally.	•It occurs with following case. Instantaneous power voltage drop. (Short time power failure) (**MUZ-GL24, MUY-GL24**) •Refer to 10-5. Ⓙ "Check of power supply". (**MUZ-GL24, MUY-GL24**) •Refer to 10-5.Ⓐ "How to check inverter/compressor".

NOTE: 1. The location of LED is illustrated at the right figure. Refer to 10-6.1.
2. LED is lit during normal operation.
3. Blinking patterns of this mode differ from the ones of the failure recall mode.

The blinking frequency shows the number of times the LED blinks after every 2.5-second OFF.
(Example) When the blinking frequency is “2”.

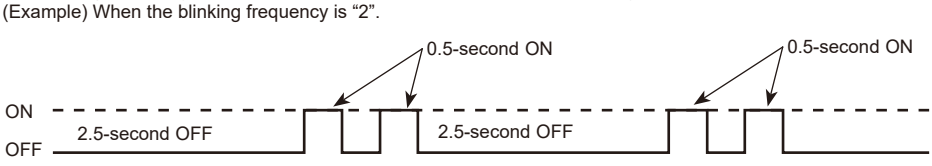

Inverter P.C. board

MUZ-GL09/12/15/18NA MUZ-GL09/12/15/18NAH MUY-GL09/12/15/18NA	MUZ-GL24NA MUZ-GL24NAH MUY-GL24NA
Blinking → LED	Blinking → LED

No.	Symptom	LED indication	Abnormal point/ Condition	Condition		Remedy
16	Outdoor unit operates.	1-time blink 2.5 seconds OFF	Frequency drop by current protection	**MUZ-GL09/12/15/18** **MUY-GL09/12/15/18**	When the input current exceeds approximately 10.5A, compressor frequency lowers.	The unit is normal, but check the following. •Check if indoor filters are clogged. •Check if refrigerant is short. •Check if indoor/outdoor unit air circulation is short cycled.
				MUZ-GL24 **MUY-GL24**	Current from power outlet is nearing breaker capacity.	
17		3-time blink 2.5 seconds OFF	Frequency drop by high pressure protection	Temperature of indoor coil thermistor exceeds 131 °F (55°C) in HEAT mode, compressor frequency lowers.		
			Frequency drop by defrosting in COOL mode	Indoor coil thermistor reads 46°F (8°C) or less in COOL mode, compressor frequency lowers.		
18		4-time blink 2.5 seconds OFF	Frequency drop by discharge temperature protection	Temperature of discharge temperature thermistor exceeds 232°F (111°C), compressor frequency lowers.		•Check refrigerant circuit and refrigerant amount. •Refer to 10-5.Ⓚ "Check of LEV". •Refer to 10-5.Ⓖ "Check of outdoor thermistors".
19		5-time blink 2.5 seconds OFF	Outside temperature thermistor protection	When the outside temperature thermistor shorts or opens, protective operation without that thermistors is performed.		•Refer to 10-5. Ⓖ Check of outdoor thermistors.
20		7-time blink 2.5 seconds OFF	Low discharge temperature protection	Temperature of discharge temperature thermistor has been 122°F (50°C) or less for 20 minutes.		•Refer to 10-5.Ⓚ "Check of LEV". •Check refrigerant circuit and refrigerant amount.
21		8-time blink 2.5 seconds OFF	**MUZ-GL09/12/15/18** **MUY-GL09/12/15/18** PAM protection PAM: Pulse Amplitude Modulation	The overcurrent flows into PFC (Power factor correction :IC820) or the Bus-bar voltage reaches 394 V or more, PAM stops and restarts.		This is not malfunction. PAM protection will be activated in the following cases: 1 Instantaneous power voltage drop. (Short time power failure) 2 When the power supply voltage is high.
			MUZ-GL24 **MUY-GL24** Zero cross detecting circuit	Zero cross signal cannot be detected.		•It occurs with following cases. 1 Instantaneous power voltage drop. (Short time power failure) 2 Distortion of primary voltage •Refer to 10-5. Ⓙ "Check of power supply".
22		9-time blink 2.5 seconds OFF	Inverter check mode	The connector of compressor is disconnected, inverter check mode starts.		•Check if the connector of the compressor is correctly connected. Refer to 10-5.Ⓐ "How to check inverter/compressor".

NOTE: 1. The location of LED is illustrated at the right figure. Refer to 10-6.1.
2. LED is lit during normal operation.
3. Blinking patterns of this mode differ from the ones of the failure recall mode.

The blinking frequency shows the number of times the LED blinks after every 2.5-second OFF.
(Example) When the blinking frequency is “2”.

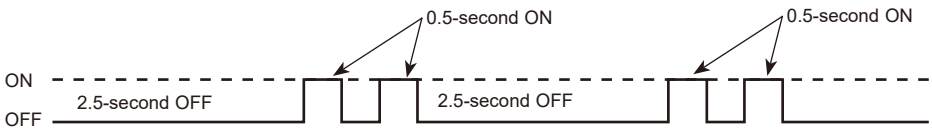

Inverter P.C. board

MUZ-GL09/12/15/18NA
MUZ-GL09/12/15/18NAH
MUY-GL09/12/15/18NA

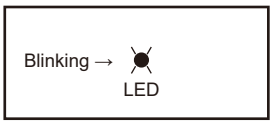

MUZ-GL24NA
MUZ-GL24NAH
MUY-GL24NA

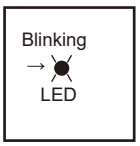

10-4. TROUBLESHOOTING CRITERION OF MAIN PARTS

MUZ-GL09NA MUZ-GL09NAH MUY-GL09NA
MUZ-GL12NA MUZ-GL12NAH MUY-GL12NA
MUZ-GL15NA MUZ-GL15NAH MUY-GL15NA
MUZ-GL18NA MUZ-GL18NAH MUY-GL18NA
MUZ-GL24NA MUZ-GL24NAH MUY-GL24NA

<table>
<tr><th>Part name</th><th>Check method and criterion</th><th>Figure</th></tr>
<tr><td>Defrost thermistor (RT61) (MUZ)
Fin temperature thermistor (RT64)
Ambient temperature thermistor (RT65)
Outdoor heat exchanger temperature thermistor (RT68)</td><td>Measure the resistance with a tester.

Refer to 10-6. “Test point diagram and voltage”, 1. “Inverter P.C. board”, for the chart of thermistor.</td><td></td></tr>
<tr><td>Discharge temperature thermistor (RT62)</td><td>Measure the resistance with a tester. Before measurement, hold the thermistor with your hands to warm it up.
Refer to 10-6. “Test point diagram and voltage”, 1. “Inverter P.C. board”, for the chart of thermistor.</td><td></td></tr>
<tr><td>Compressor</td><td>Measure the resistance between terminals using a tester.
[Temperature: 14 - 104°F (-10 - 40°C)]
<table>
<tr><th></th><th colspan="5">Normal (Ω)</th></tr>
<tr><td></td><td>MUZ-GL09NA-U1
MUZ-GL09NAH-U1
MUY-GL09NA-U1</td><td>MUZ-GL09NA-U2
MUZ-GL09NAH-U2
MUY-GL09NA-U2</td><td>MUZ-GL09NA-U8
MUZ-GL09NAH-U8
MUZ-GL12
MUY-GL12</td><td>MUZ-GL15/18
MUY-GL15/18</td><td>MUZ-GL24
MUY-GL24</td></tr>
<tr><td>U-V
U-W
V-W</td><td>1.26 - 1.72</td><td>1.59 - 2.16</td><td>1.60 - 2.17</td><td>0.82 - 1.11</td><td>0.87 - 1.18</td></tr>
</table></td><td> 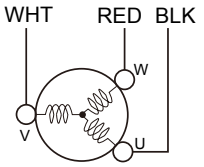
</td></tr>
<tr><td>Outdoor fan motor</td><td>Measure the resistance between lead wires using a tester.
[Temperature: 14 - 104°F (-10 - 40°C)]
<table>
<tr><th rowspan="2">Color of lead wire</th><th colspan="3">Normal (Ω)</th></tr>
<tr><td>MUZ-GL09/12/15-U1
MUY-GL09/12/15-U1
MUZ-GL09NA-U8</td><td>MUZ-GL09/12/15-U2
MUY-GL09/12/15-U2</td><td>MUZ-GL18/24
MUY-GL18/24</td></tr>
<tr><td>RED – BLK
BLK – WHT
WHT – RED</td><td>29 - 40</td><td>28 - 39</td><td>12 - 16</td></tr>
</table></td><td> 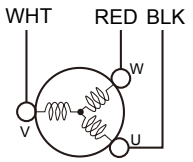
</td></tr>
<tr><td>R. V. coil (21S4)</td><td>Measure the resistance using a tester.
[Temperature: 14 - 104°F (-10 - 40°C)]
<table>
<tr><th colspan="2">Normal (kΩ)</th></tr>
<tr><td>MUZ-GL09/12NA-U1, U8
MUZ-GL09/12NAH-U1, U8
MUZ-GL15/18/24NA, MUZ-GL15/18/24NAH</td><td>MUZ-GL09/12NA-U2
MUZ-GL09/12NAH-U2</td></tr>
<tr><td>0.97 - 1.38</td><td>1.65 - 2.48</td></tr>
</table></td><td></td></tr>
<tr><td>Expansion valve coil (LEV)</td><td>Measure the resistance using a tester.
[Temperature: 14 - 104°F (-10 - 40°C)]
<table>
<tr><th>Color of lead wire</th><th>Normal (Ω)</th></tr>
<tr><td>RED – ORN</td><td rowspan="4">37 - 54</td></tr>
<tr><td>RED – WHT</td></tr>
<tr><td>RED – BLU</td></tr>
<tr><td>RED – YLW</td></tr>
</table></td><td> 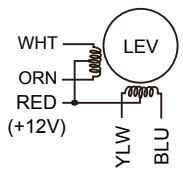
</td></tr>
<tr><td>Defrost heater (MUZ-GL·NAH)</td><td>Measure the resistance using a tester.
[Temperature: 14 - 104°F (-10 - 40°C)]
<table>
<tr><th colspan="2">Normal (Ω)</th></tr>
<tr><td>GL09/12/15</td><td>GL18/24</td></tr>
<tr><td>349 - 428</td><td>376 - 461</td></tr>
</table></td><td></td></tr>
</table>

10-5. TROUBLESHOOTING FLOW

Ⓐ How to check inverter/compressor

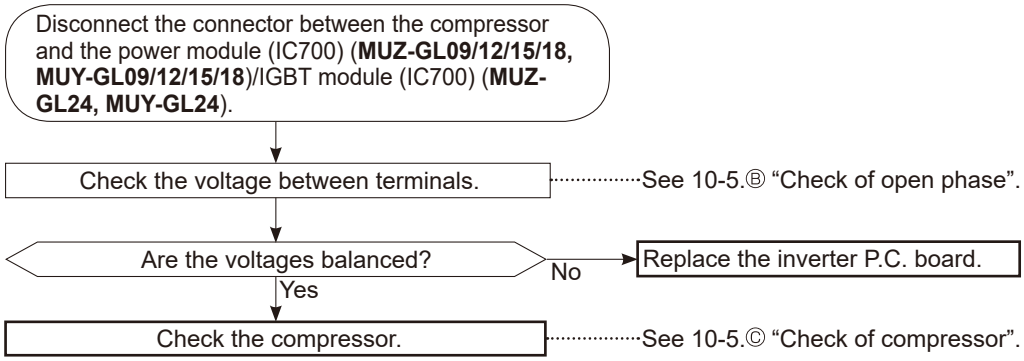

Ⓑ Check of open phase

- With the connector between the compressor and the power module (IC700) (**MUZ-GL09/12/15/18, MUY-GL09/12/15/18**)/IGBT module (IC700) (**MUZ-GL24, MUY-GL24**) disconnected, activate the inverter and check if the inverter is normal by measuring **the voltage balance** between the terminals.

  Output voltage is 50 - 130 V. (The voltage may differ according to the tester.)

<< Operation method>>
Start cooling or heating operation by pressing EMERGENCY OPERATION switch on the indoor unit. (TEST RUN OPERATION: Refer to 7-6.)
<<Measurement point>>
At 3 points
BLK (U)-WHT (V)
BLK (U)-RED (W)
WHT(V)-RED (W)

*Measure AC voltage between the lead wires at 3 points.

NOTE: 1. Output voltage varies according to power supply voltage.
2. Measure the voltage by analog type tester.
3. During this check, LED of the inverter P.C. board blinks 9 times. (Refer to 10-6.1.)

Ⓒ Check of compressor

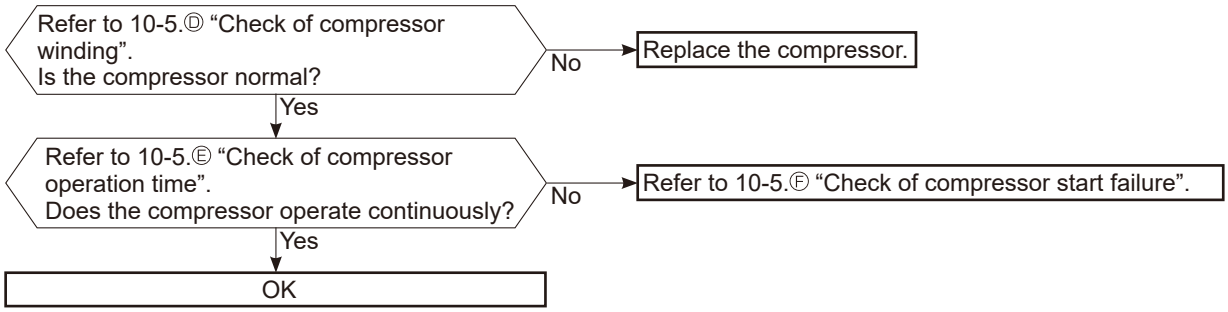

Ⓓ Check of compressor winding

●Disconnect the connector between the compressor and the power module (IC700) (**MUZ-GL09/12/15/18, MUY-GL09/12/15/18**)/ IGBT module (IC700) (**MUZ-GL24, MUY-GL24**), and measure the resistance between the compressor terminals.

<<Measurement point>>

At 3 points
BLK-WHT
BLK-RED
WHT-RED

*Measure the resistance between the lead wires at 3 points.

<<Judgement>>

Refer to 10-4.
0 [Ω] ·····Abnormal [short]
Infinite [Ω] ·····Abnormal [open]
NOTE: Be sure to zero the ohmmeter before measurement.

Ⓔ Check of compressor operation time

● Connect the compressor and activate the inverter. Then measure the time until the inverter stops due to overcurrent.
<<Operation method>>
Start heating or cooling operation by pressing EMERGENCY OPERATION switch on the indoor unit. (TEST RUN OPERATION: Refer to 7-6.)
<<Measurement>>
Measure the time from the start of compressor to the stop of compressor due to overcurrent.

<<Judgement>>

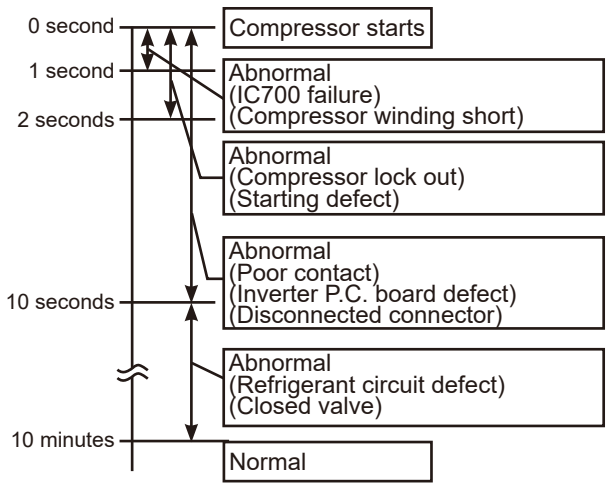

Ⓕ Check of compressor start failure

Confirm that ①~④ is normal.
•Electrical circuit check
①. Contact of the compressor connector
②. Output voltage of inverter P.C. board and balance of them (See 10-5.Ⓑ)
③. Direct current voltage between DB61(+) and (-) (**MUZ-GL09/12/15/18, MUY-GL09/12/15/18**)/ JP715(+) and JP30(-) (**MUZ-GL24, MUY-GL24**), on the inverter P.C. board
④. Voltage between outdoor terminal block S1-S2

↓

Does the compressor run for 10 seconds or more after it starts?
Yes → Check the refrigerant circuit. Check the stop valve.
No ↓

After the compressor is heated with a drier, does the compressor start? *1
No → Replace the compressor.
Yes ↓

Compressor start failure. Activate pre-heat control. (Refer to 9-2. "PRE-HEAT CONTROL SETTING")

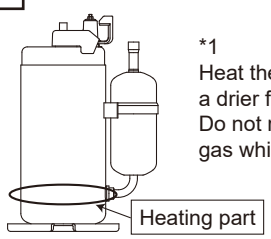

*1
Heat the compressor with a drier for about 20 minutes. Do not recover refrigerant gas while heating.

Ⓖ Check of outdoor thermistors

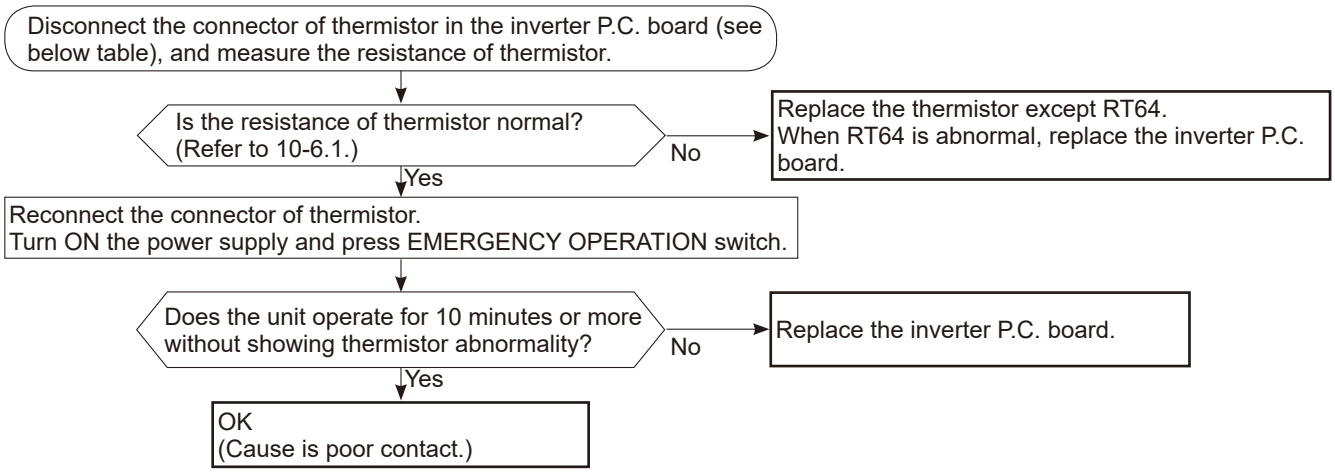

MUZ-GL09/12/15/18, MUY-GL09/12/15/18

Thermistor	Symbol	Connector, Pin No.	Board
Defrost (**MUZ**)	RT61	Between CN641 pin1 and pin2	Inverter P.C. board
Discharge temperature	RT62	Between CN641 pin3 and pin4	
Fin temperature	RT64	Between CN642 pin1 and pin2	
Ambient temperature	RT65	Between CN643 pin1 and pin2	
Outdoor heat exchanger temperature	RT68	Between CN644 pin1 and pin3	

MUZ-GL24, MUY-GL24

Thermistor	Symbol	Connector, Pin No.	Board
Defrost (**MUZ**)	RT61	Between CN671 pin1 and pin2	Inverter P.C. board
Discharge temperature	RT62	Between CN671 pin3 and pin4	
Fin temperature	RT64	Between CN673 pin1 and pin2	
Ambient temperature	RT65	Between CN672 pin1 and pin2	
Outdoor heat exchanger temperature	RT68	Between CN671 pin5 and pin6	

Ⓗ Check of R.V. coil (MUZ)

MUZ-GL09/12/15/18NA MUZ-GL09/12/15/18NAH

* First of all, measure the resistance of R.V. coil to check if the coil is defective. Refer to 10-4.
* In case CN721 is disconnected or R.V. coil is open, voltage is generated between the terminal pins of the connector although no signal is being transmitted to R.V. coil.
  Check if CN721 is connected.

Unit operates in COOL mode even if it is set to HEAT mode.

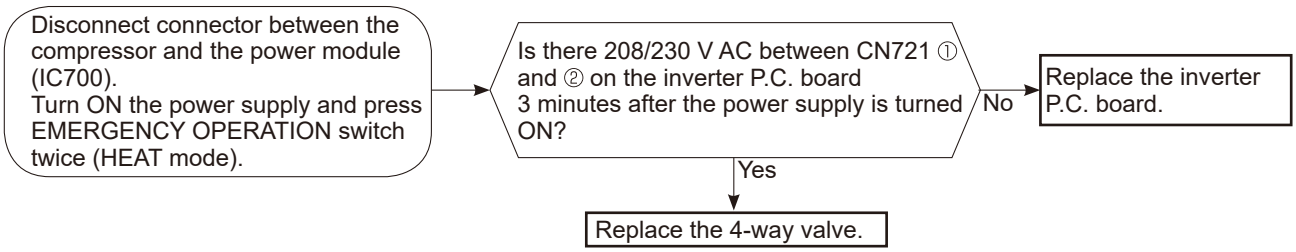

Unit operates in HEAT mode even if it is set to COOL mode.

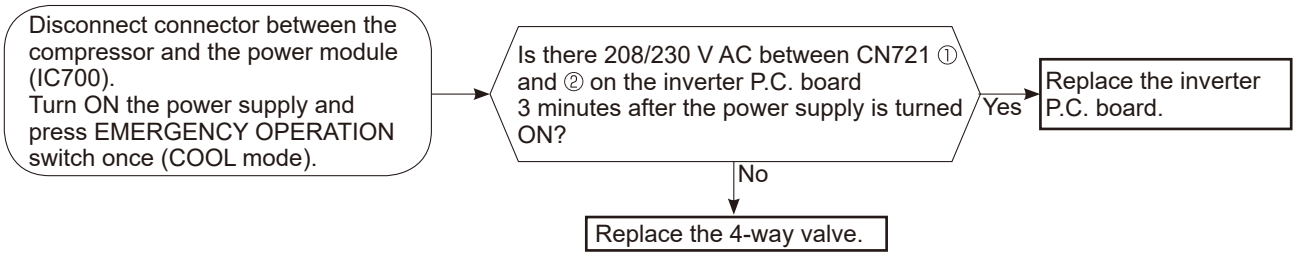

MUZ-GL24NA MUZ-GL24NAH

* First of all, measure the resistance of R.V. coil to check if the coil is defective. Refer to 10-4.
* In case CN602 is disconnected or R.V. coil is open, voltage is generated between the terminal pins of the connector although no signal is being transmitted to R.V. coil.
  Check if CN602 is connected.

Unit operates in COOL mode even if it is set to HEAT mode.

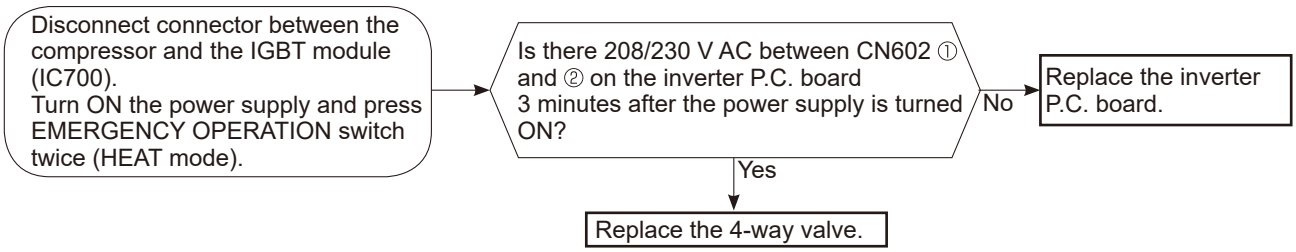

Unit operates in HEAT mode even if it is set to COOL mode.

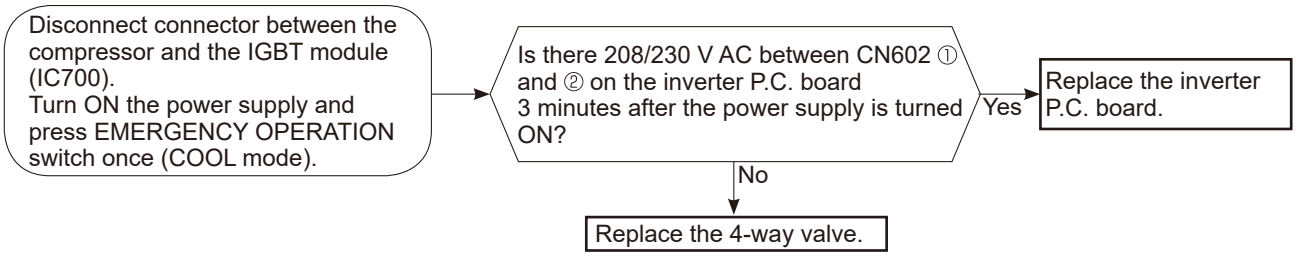

Ⓘ Check of outdoor fan motor

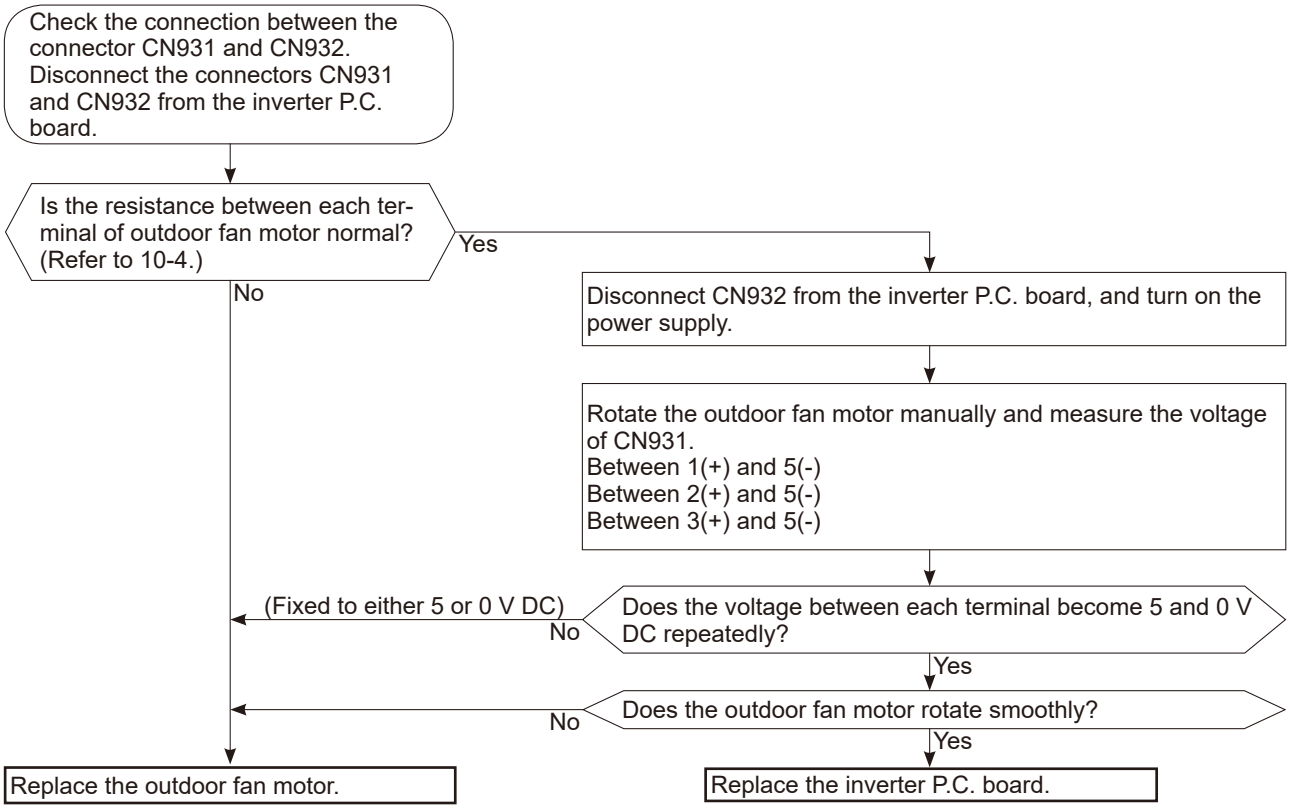

Ⓙ Check of power supply

Disconnect the connector between the compressor and the power module (IC700) (**MUZ-GL09/12/15/18, MUY-GL09/12/15/18**)/IGBT module (IC700) (**MUZ-GL24, MUY-GL24**).
Turn ON power supply and press EMERGENCY OPERATION switch.

↓

Does the upper lamp of the OPERATION INDICATOR lamp on the indoor unit light up?

- No → Is there voltage 208/230 V AC between the indoor terminal block S1 and S2?
  - No → Rectify indoor/outdoor connecting wire.
  - Yes → Replace the indoor electronic control P.C. board.
- Yes ↓

Is there Bus-bar voltage 260 - 370 V DC between DB61 (+) and DB61 (–) (**MUZ-GL09/12/15/18, MUY-GL09/12/15/18**)/294 - 370 V DC between JP715 (+) and JP30 (–) (**MUZ-GL24, MUY-GL24**) on the inverter P.C. board? (Refer to 10-6.1.)

- Yes → Does LED on the inverter P.C. board light up or blink? (Refer to 10-6.1.)
  - No → Replace the inverter P.C. board.
  - Yes ↓ If lights up, OK. If blinks, refer to 10-3.
- No ↓ Check the electric parts in main circuit.

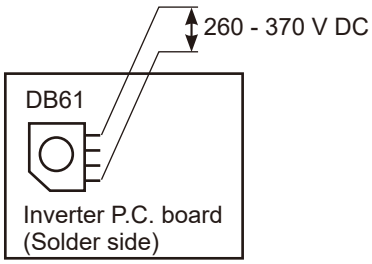

MUZ-GL09/12/15/18NA
MUZ-GL09/12/15/18NAH
MUY-GL09/12/15/18NA

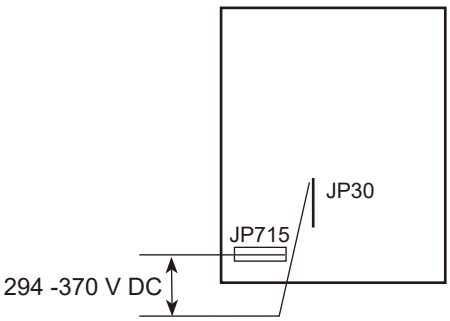

MUZ-GL24NA
MUZ-GL24NAH
MUY-GL24NA

Ⓚ Check of LEV (Expansion valve)

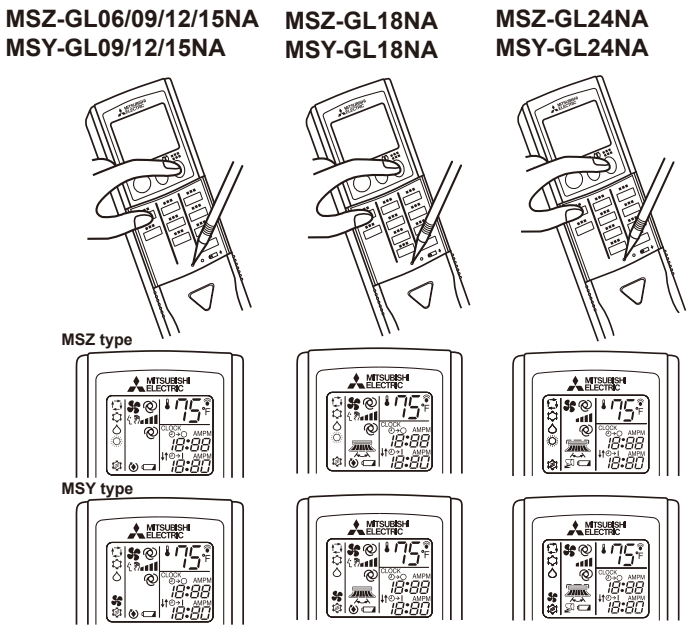

*1. Regardless of normal or abnormal condition, a short beep is emitted once the signal is received.

Turn ON the power supply.
<Preparation of the remote controller>
① While pressing both OPERATION SELECT button and TOO COOL button on the remote controller at the same time, press RESET button.
② First, release RESET button.
Hold down the other 2 buttons for another 3 seconds. Make sure that the indicators on the LCD screen shown in the right figure are all displayed. Then release the buttons.

↓

Press STOP/OPERATE (OFF/ON) button of the remote controller (the set temperature is displayed) with the remote controller headed towards the indoor unit. *1

↓

Expansion valve operates in full-opening direction.

↓

Do you hear the expansion valve "click, click·····"? Do you feel the expansion valve vibrates when touching it ?
- Yes → OK
- No ↓

Is LEV coil properly fixed to the expansion valve?
- No → Properly fix the LEV coil to the expansion valve.
- Yes ↓

Does the resistance of LEV coil have the characteristics? (Refer to 10-4.)
- No → Replace the LEV coil.
- Yes → Measure each voltage between connector pins of CN724 on the inverter P.C. board.
  1. Pin③(-) — Pin①(+)
  2. Pin④(-) — Pin①(+)
  3. Pin⑤(-) — Pin①(+)
  4. Pin⑥(-) — Pin①(+)

  Is there about 3 - 5 V AC between each?
  NOTE: Measure the voltage by an analog tester.
  - No → Replace the inverter P.C. board.
  - Yes → Replace the expansion valve.

NOTE: After check of LEV, take the following steps.
1. Turn OFF the power supply and turn it ON again.
2. Press RESET button on the remote controller.

Ⓛ Check of inverter P.C. board

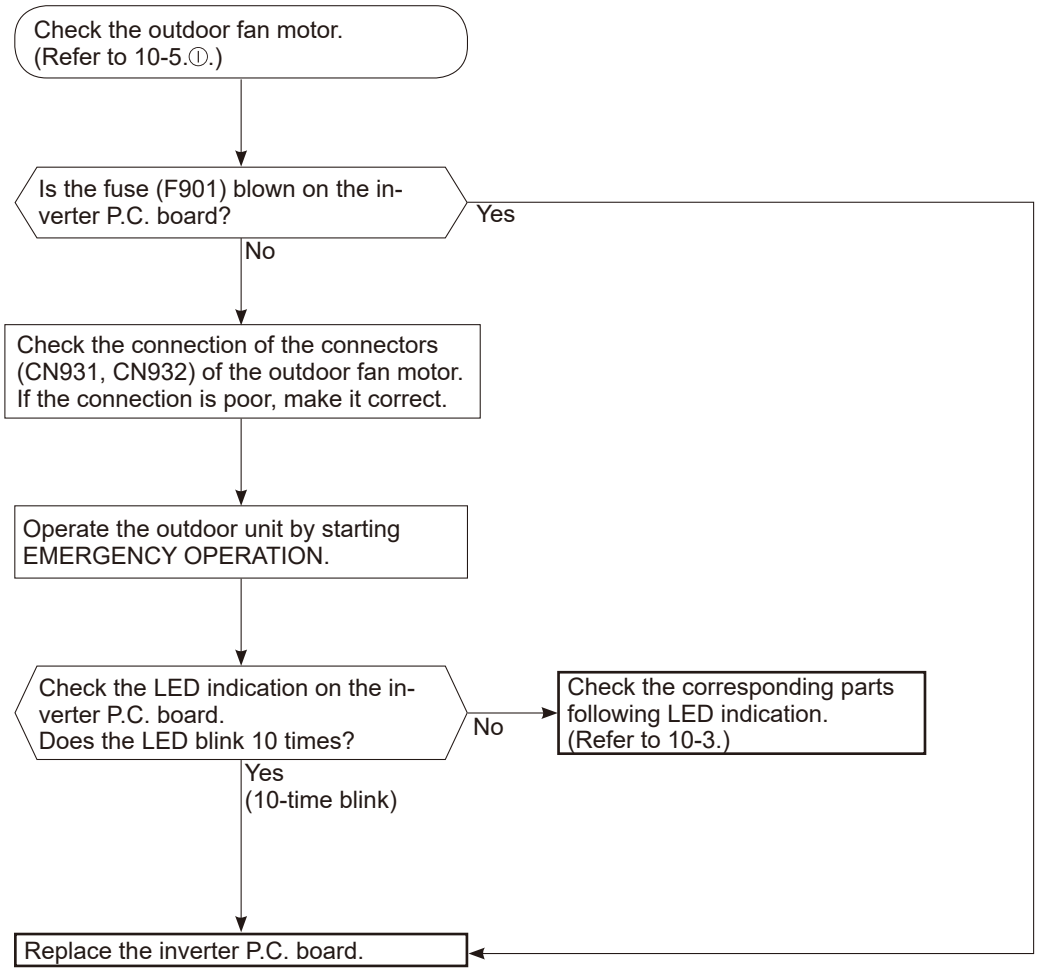

Ⓜ How to check miswiring and serial signal error

MUZ-GL09/12/15NA
MUZ-GL09/12/15NAH
MUY-GL09/12/15NA

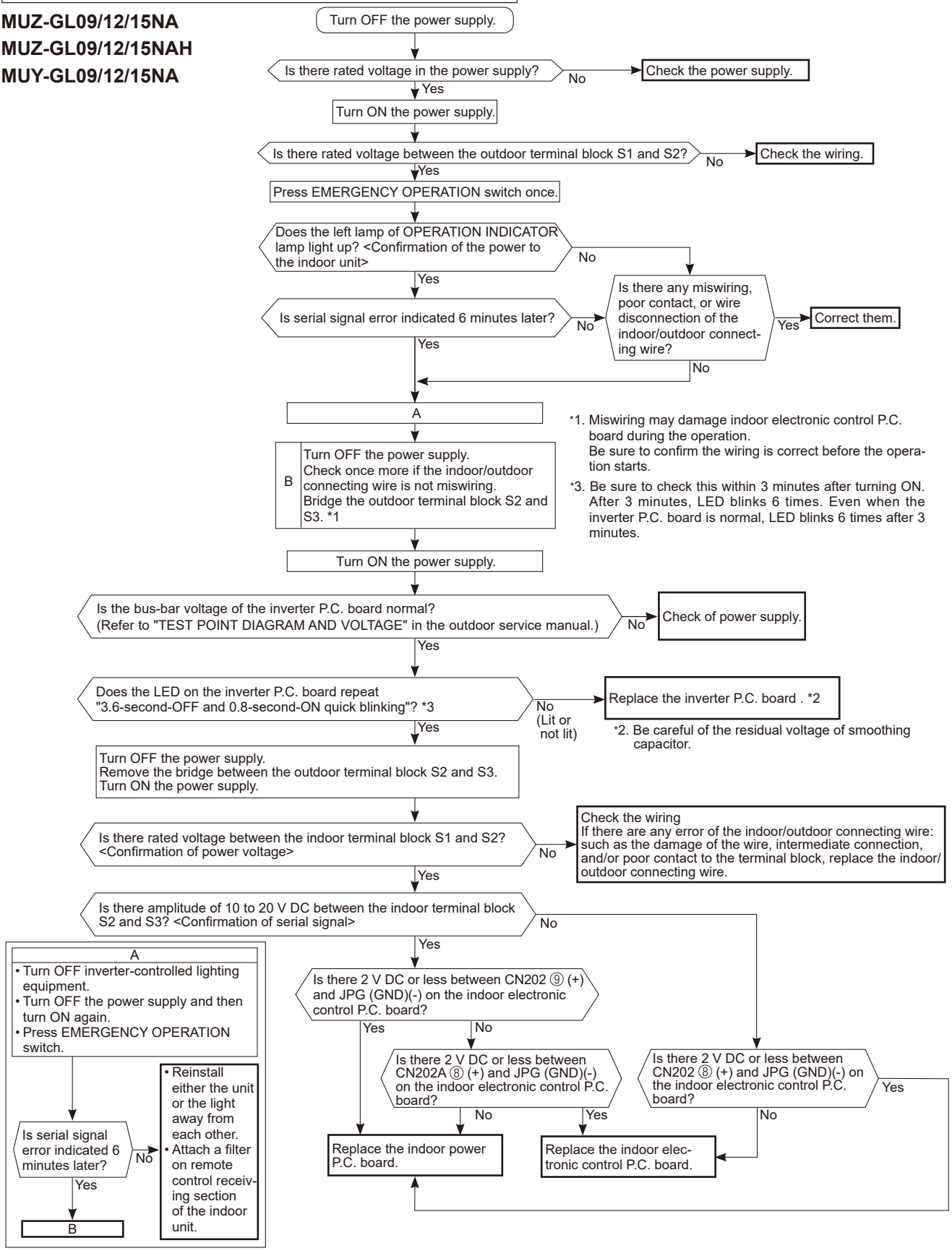

*1. Miswiring may damage indoor electronic control P.C. board during the operation.
Be sure to confirm the wiring is correct before the operation starts.

*3. Be sure to check this within 3 minutes after turning ON. After 3 minutes, LED blinks 6 times. Even when the inverter P.C. board is normal, LED blinks 6 times after 3 minutes.

*2. Be careful of the residual voltage of smoothing capacitor.

MUZ-GL18/24NA
MUZ-GL18/24NAH
MUY-GL18/24NA

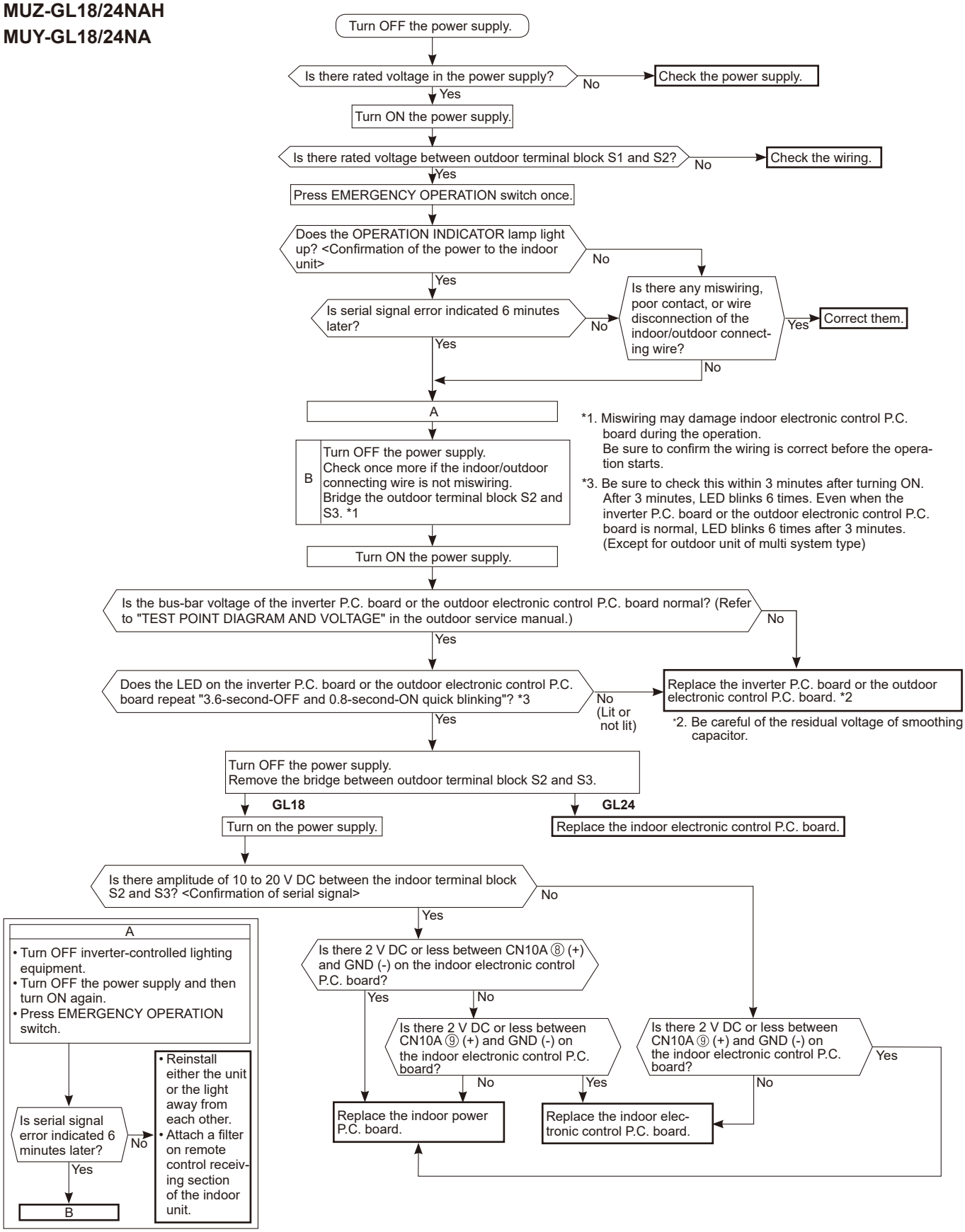

Ⓝ Check of defrost heater (base pan heater) (MUZ-GL•NAH)

MUZ-GL09/12/15/18/24NAH

Check the following points before checking electric continuity.
1. Does the resistance of ambient temperature thermistor have the characteristics? Refer to 10-6.1.
2. Is the resistance of defrost heater normal? Refer to 10-4.
3. Does the heater protector remain conducted (not open)?
4. Are both ambient temperature thermistor and circuit of defrost heater securely connected to connectors?

In HEAT mode, for more than 5 minutes, let the ambient temperature thermistor continue to read 32°F (0°C) or below, and let the defrost thermistor continue to read 30°F (-1°C) or below.

NOTE: In case both thermistors are more than the above temperature, cool them with cold water etc...

Is there 208/230 V AC between CN601 ① and ② (**MUZ-GL24NAH**)/CN722 ① and ③ (**Other models**) on the inverter P.C. board? Refer to 10-6.1.

- Yes → Not the problem of the inverter P.C. board.
- No → Replace the inverter P.C. board.

Ⓞ Check of outdoor refrigerant circuit

Has the operation stopped during pump down?

- Yes → The operation has stopped to prevent the diesel explosion caused by air trapped in the refrigerant circuit. Close the stop valve, and disconnect the power plug or turn the breaker OFF.

  CAUTION :
  Do not start the operation again to prevent hazards.
- No ↓

Was the operation started with the stop valve closed, and was it opened during operation?

- Yes → The unit occasionally stops when the stop valve is opened or closed during operation. Open the stop valve and start the cooling operation again.
- No ↓

The refrigerant gas amount may be 60% or less than the normal amount. Identify where the gas is leaking from, and fix the leak.

Ⓟ Electromagnetic noise enters into TV sets or radios

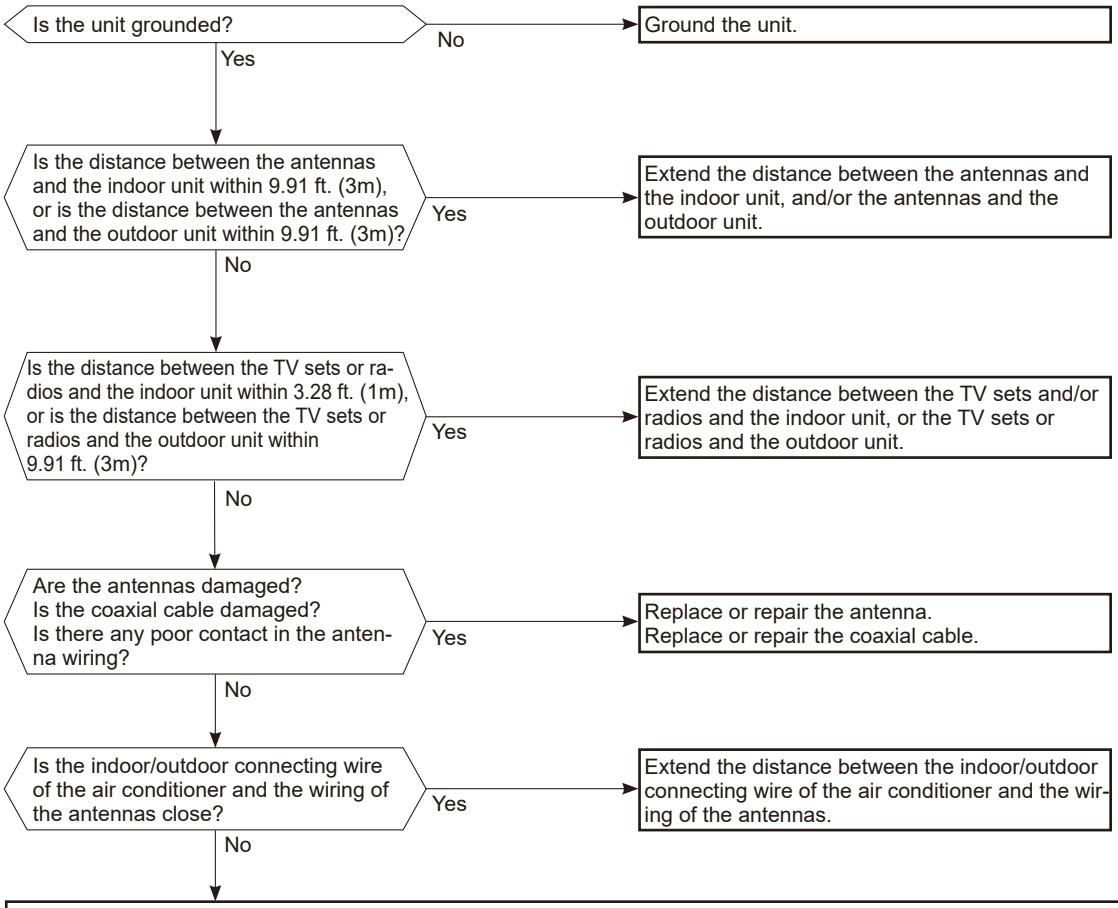

Even if all of the above conditions are fulfilled, the electromagnetic noise may enter, depending on the electric field strength or the installation condition (combination of specific conditions such as antennas or wiring).
Check the following before asking for service.

1. Devices affected by the electromagnetic noise
   TV sets, radios (FM/AM broadcast, shortwave)
2. Channel, frequency, broadcast station affected by the electromagnetic noise
3. Channel, frequency, broadcast station unaffected by the electromagnetic noise
4. Layout of:
   indoor/outdoor unit of the air conditioner, indoor/outdoor wiring, ground wire, antennas, wiring from antennas, receiver
5. Electric field intensity of the broadcast station affected by the electromagnetic noise
6. Presence or absence of amplifier such as booster
7. Operation condition of air conditioner when the electromagnetic noise enters in
   1) Turn OFF the power supply once, and then turn ON the power supply. In this situation, check for the electromagnetic noise.
   2) Within 3 minutes after turning ON the power supply, press STOP/OPERATE (OFF/ON) button on the remote controller for power ON, and check for the electromagnetic noise.
   3) After a short time (3 minutes later after turning ON), the outdoor unit starts running. During operation, check for the electromagnetic noise.
   4) Press STOP/OPERATE (OFF/ON) button on the remote controller for power OFF, when the outdoor unit stops but the indoor/outdoor communication still runs on. In this situation, check for the electromagnetic noise.