MITSUBISHI ELECTRIC

SPLIT-TYPE AIR CONDITIONERS

Revision G:
- A warning when opening or closing the valve has been added.

OBH543 REVISED EDITION-F is void.

OUTDOOR UNIT

HFC utilized R410A

No. OBH543
REVISED EDITION-G

SERVICE MANUAL

Models

MUZ-FE09NA
MUZ-FE09NA -1
MUZ-FE09NAH
MUZ-FE12NA
MUZ-FE12NA1
MUZ-FE12NAH
MUZ-FE18NA

Indoor unit service manual
MSZ-FE•NA Series (OBH542)

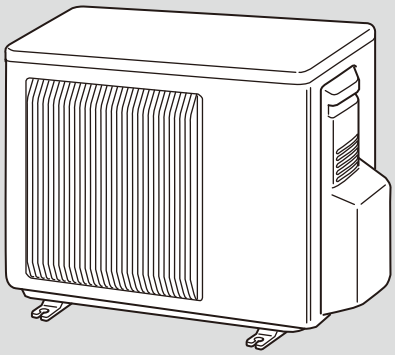

MUZ-FE09NA **MUZ-FE09NAH**
MUZ-FE12NA **MUZ-FE12NAH**
MUZ-FE09NA -1
MUZ-FE12NA1

CONTENTS

1. TECHNICAL CHANGES ····· 3
2. PART NAMES AND FUNCTIONS ····· 3
3. SPECIFICATION ····· 4
4. OUTLINES AND DIMENSIONS ····· 6
5. WIRING DIAGRAM ····· 7
6. REFRIGERANT SYSTEM DIAGRAM ····· 9
7. DATA ····· 11
8. ACTUATOR CONTROL ····· 18
9. SERVICE FUNCTIONS ····· 19
10. TROUBLESHOOTING ····· 19
11. DISASSEMBLY INSTRUCTIONS ····· 38

PARTS CATALOG (OBB543)

Mr.SLIM™

Use the specified refrigerant only

Never use any refrigerant other than that specified.

Doing so may cause a burst, an explosion, or fire when the unit is being used, serviced, or disposed of.
Correct refrigerant is specified in the manuals and on the spec labels provided with our products.
We will not be held responsible for mechanical failure, system malfunction, unit breakdown or accidents caused by failure to follow the instructions.

<Preparation before the repair service>

- Prepare the proper tools.
- Prepare the proper protectors.
- Provide adequate ventilation.
- After stopping the operation of the air conditioner, turn off the power-supply breaker and pull the power plug.
- Discharge the capacitor before the work involving the electric parts.

<Precautions during the repair service>

- Do not perform the work involving the electric parts with wet hands.
- Do not pour water into the electric parts.
- Do not touch the refrigerant.
- Do not touch the hot or cold areas in the refrigeration cycle.
- When the repair or the inspection of the circuit needs to be done without turning off the power, exercise great caution not to touch the live parts.

⚠ WARNING

- **When the refrigeration circuit has a leak, do not execute pump down with the compressor.**
- **When pumping down the refrigerant, stop the compressor before disconnecting the refrigerant pipes. The compressor may burst if air etc. get into it.**
- **When opening or closing the valve below freezing temperatures, refrigerant may spurt out from the gap between the valve stem and the valve body, resulting in injuries.**

Revision A:

• MUZ-FE18NA has been added.

Revision B:

• MUZ-FE09NA - 1 and MUZ-FE12NA1 have been added.

Revision C:

• Specification has been corrected.
[Capacity Rated ➔ Capacity Rated (Maximum), Power consumption Rated ➔ Power consumption Rated (Maximum)]

Revision D:

• MUZ-FE09NAH and MUZ-FE12NAH have been added.

Revision E:

• The formula for calculating the additional refrigerant charge has been corrected.

Revision F:

• The descriptions of the expansion valve coil have been corrected. (10-4.)
• Some descriptions have been modified.

Revision G:

• A warning when opening or closing the valve has been added.

1 TECHNICAL CHANGES

MUZ-FE09NA
MUZ-FE12NA
MUZ-FE18NA
1. New model

MUZ-FE09NA → MUZ-FE09NA - 1
MUZ-FE12NA → MUZ-FE12NA1
1. Compressor has been changed.
2. Inverter P.C. board has been changed.

MUZ-FE09NA - 1 → MUZ-FE09NAH
MUZ-FE12NA1 → MUZ-FE12NAH
1. Defrost heater has been added.
2. Inverter P.C. board has been changed.

2 PART NAMES AND FUNCTIONS

MUZ-FE09NA MUZ-FE09NAH MUZ-FE12NA MUZ-FE12NA1 MUZ-FE12NAH

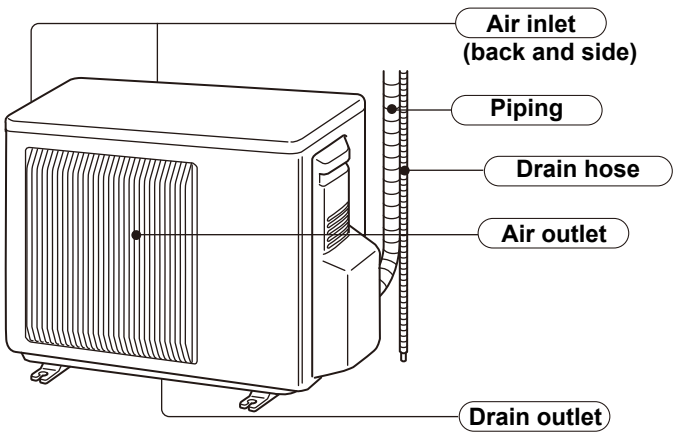

MUZ-FE18NA

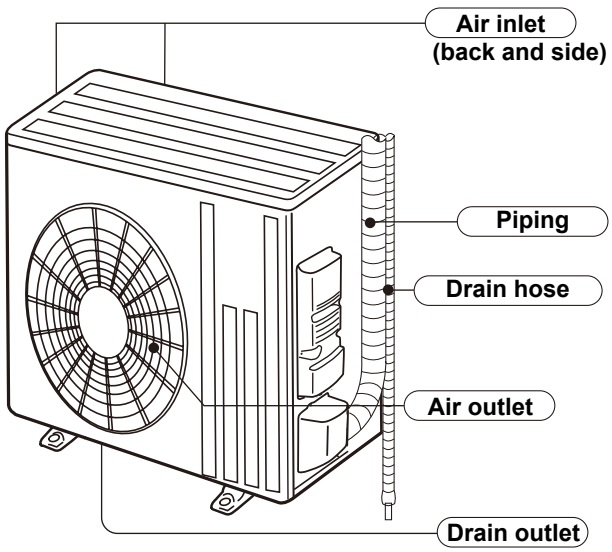

3 SPECIFICATION

Outdoor unit model			MUZ-FE09NA MUZ-FE09NAH	MUZ-FE12NA MUZ-FE12NA1 MUZ-FE12NAH		MUZ-FE18NA
Capacity Rated (Minimum~Maximum)	Cooling *1	Btu/h	9,000 (2,800~9,000)	12,000 (2,800~12,000)		18,000 (8,200~25,200)
	Heating 47 *1	Btu/h	10,900 (3,000~18,000)	13,600 (3,000~21,000)		21,600 (7,500~29,700)
Capacity Rated (Maximum)	Heating 17 *2	Btu/h	6,700 (12,500)	**12NA**	8,300(13,600)	11,700 (21,600)
				12NA1	7,900(13,600)	
Power consumption Rated (Minimum~Maximum)	Cooling *1	W	580 (160~650)	930 (160~960)		1,270 (570~2,280)
	Heating 47 *1	W	710 (150~2,250)	950 (150~2,250)		1,540 (520~2,420)
Power consumption Rated (Maximum)	Heating 17 *2	W	650 (1,730)	**12NA**	800(1,780)	1,240 (2,620)
				12NA1	750(1,780)	
EER *1 [SEER] *3	Cooling		15.5 [26.0]	12.9 [23.0]		14.2 [20.2]
HSPF IV *4	Heating		10.0	**12NA**	10.6	10.3
				12NA1	10.5	
				12NAH	10.1	
COP	Heating *1		4.50	4.20		4.11
Power supply	V , phase , Hz		208/230, 1 , 60			
Max. fuse size (time delay)		A	15			20
Min. circuit ampacity		A	12			17.1
Fan motor		F.L.A	0.56			0.93
Compressor	Model		**09NA** **12NA**	SNB130FQAH		SNB172FQKMT
			09NA - 1, **09NAH** **12NA1, 12NAH**	SNB130FQBHT		
		R.L.A	8.6			12.9
		L.R.A	10.8			16.1
	Refrigeration oil L (Model)		0.45 (NEO22)			0.40 (FV50S)
Refrigerant control			Linear expansion valve			
Sound level *1	Cooling	dB(A)	48	48		55
	Heating	dB(A)	49	49		55
Defrost method			Reverse cycle			
Dimensions	W	in.	31-1/2			33-1/16
	D	in.	11-1/4			13
	H	in.	21-5/8			34-5/8
Weight		lb.	80			119
External finish			Munsell 3Y 7.8/1.1			
Remote controller			Wireless type			
Control voltage (by built-in transformer)		V DC	12 - 24			
Refrigerant piping			Not supplied			
Refrigerant pipe size (Min. wall thickness)	Liquid	in.	1/4 (0.0315)			3/8 (0.0315)
	Gas	in.	3/8 (0.0315)			5/8 (0.0315)
Connection method	Indoor		Flared			Flared
	Outdoor		Flared			Flared
Between the indoor & outdoor units	Height difference	ft.	40			50
	Piping length	ft.	65			100
Refrigerant charge (R410A)			2 lb. 9 oz.			4 lb. 3 oz.

NOTE: Test conditions are based on AHRI 210/240.

*1: Rating conditions (Cooling) — Indoor: 80˚FDB, 67˚FWB, Outdoor: 95˚FDB, (75˚FWB)
(Heating) — Indoor: 70˚FDB, 60˚FWB, Outdoor: 47˚FDB, 43˚FWB

*2: Rating conditions (Heating) — Indoor: 70˚FDB, 60˚FWB, Outdoor: 17˚FDB, 15˚FWB

Test condition

*3, *4

ARI	Mode	Test	Indoor air condition (°F)		Outdoor air condition (°F)	
			Dry bulb	Wet bulb	Dry bulb	Wet bulb
	SEER (Cooling)	"A-2" Cooling Steady State at rated compressor Speed	80	67	95	(75)
		"B-2" Cooling Steady State at rated compressor Speed	80	67	82	(65)
		"B-1" Cooling Steady State at minimum compressor Speed	80	67	82	(65)
		"F-1" Cooling Steady State at minimum compressor Speed	80	67	67	(53.5)
		"E-V" Cooling Steady State at Intermediate compressor Speed *5	80	67	87	(69)
	HSPF (Heating)	"H1-2" Heating Steady State at rated compressor Speed	70	60	47	43
		"H3-2" Heating at rated compressor Speed	70	60	17	15
		"H0-1" Heating Steady State at minimum compressor Speed	70	60	62	56.5
		"H1-1" Heating Steady State at minimum compressor Speed	70	60	47	43
		"H2-V" Heating at Intermediate compressor Speed *5	70	60	35	33

*5: At Intermediate compressor Speed
= ("Cooling rated compressor speed" - "minimum compressor speed") / 3 + "minimum compressor speed".

OPERATING RANGE

(1) POWER SUPPLY

	Rated voltage	Guaranteed voltage (V)
Outdoor unit	208/230 V 1 phase 60 Hz	Min. 187 — 208 — 230 — Max. 253

(2) OPERATION

Mode	Condition	Intake air temperature (°F)			
		Indoor		Outdoor	
		DB	WB	DB	WB
Cooling	Standard temperature	80	67	95	—
	Maximum temperature	90	73	115	—
	Minimum temperature	67	57	14	—
	Maximum humidity	78 %		—	
Heating	Standard temperature	70	60	47	43
	Maximum temperature	80	67	75	65
	Minimum temperature	70	60	-13	-15

4 OUTLINES AND DIMENSIONS

MUZ-FE09NA MUZ-FE09NAH MUZ-FE12NA MUZ-FE12NA1 MUZ-FE12NAH

Unit: inch

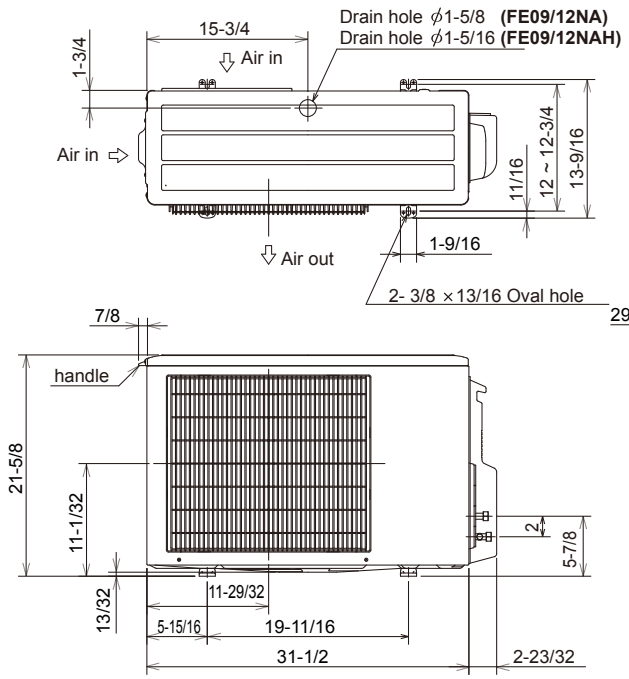

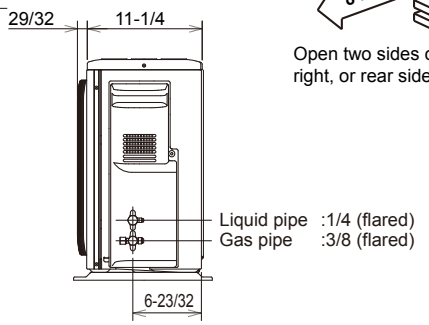

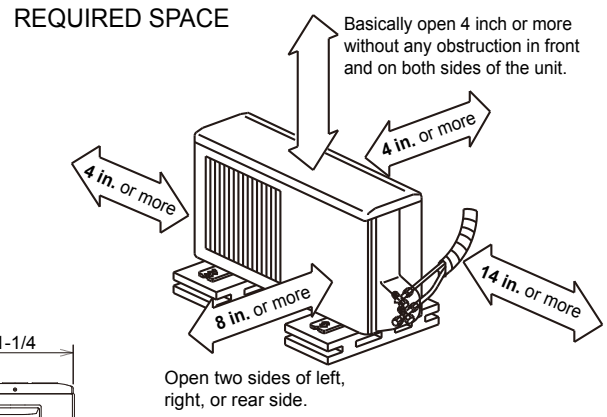

MUZ-FE18NA

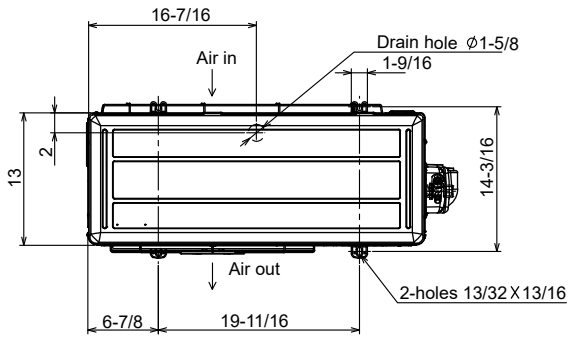

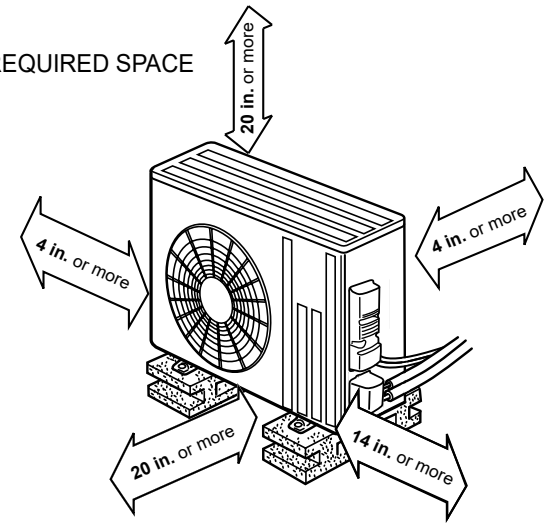

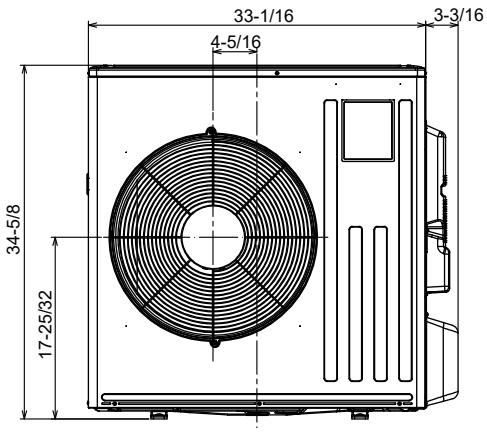

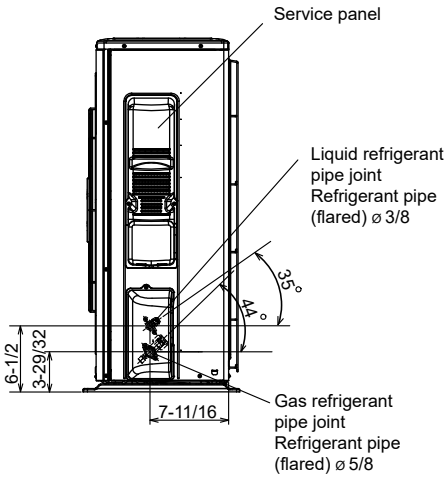

5 WIRING DIAGRAM

MUZ-FE09NA MUZ-FE12NA

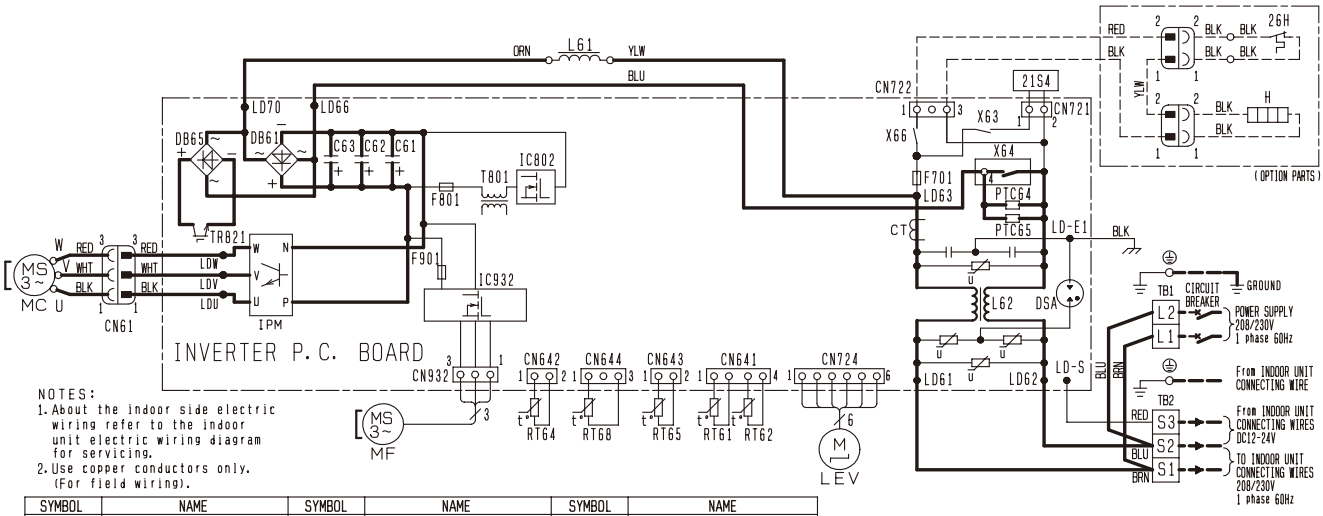

NOTES:
1. About the indoor side electric wiring refer to the indoor unit electric wiring diagram for servicing.
2. Use copper conductors only. (For field wiring).

SYMBOL	NAME	SYMBOL	NAME	SYMBOL	NAME
CT	CURRENT TRANSFORMER	L62	CMC COIL	RT68	OUTDOOR HEAT EXCHANGER TEMP. THERMISTOR.
C61, C62, C63	SMOOTHING CAPACITOR	LEV	EXPANSION VALVE COIL		
DB61, DB65	DIODE MODULE	MC	COMPRESSOR	TB1, TB2	TERMINAL BLOCK
DSA	SURGE ABSORBER	MF	FAN MOTOR	TR821	SWITCHING POWER TRANSISTOR
F701, F801, F901	FUSE (T3.15AL250V)	PTC64, PTC65	CIRCUIT PROTECTION	T801	TRANSFORMER
H	DEFROST HEATER(OPTION PARTS)	RT61	DEFROST THERMISTOR	X63, X64, X66	RELAY
IC802	INTELLIGENT POWER DEVICE	RT62	DISCHARGE TEMP. THERMISTOR	21S4	REVERSING VALVE COIL
IPM, IC932	INTELLIGENT POWER MODULE	RT64	FIN TEMP. THERMISTOR	26H	HEATER PROTECTOR(OPTION PARTS)
L61	REACTOR	RT65	AMBIENT TEMP. THERMISTOR		

MUZ-FE09NA - 1 MUZ-FE12NA1

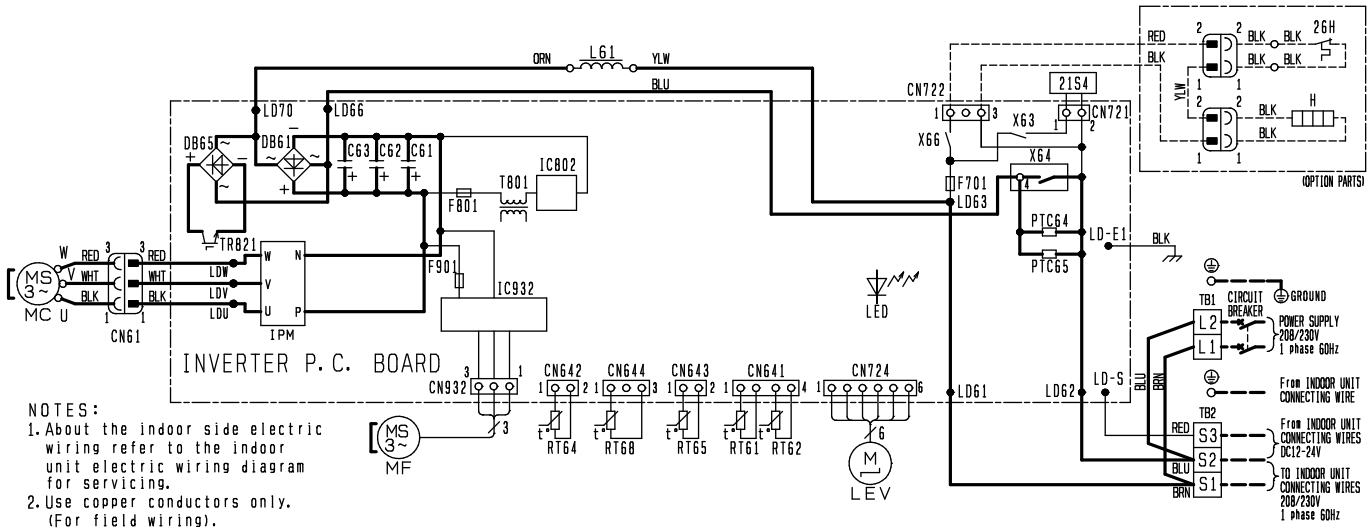

NOTES:
1. About the indoor side electric wiring refer to the indoor unit electric wiring diagram for servicing.
2. Use copper conductors only. (For field wiring).

SYMBOL	NAME	SYMBOL	NAME	SYMBOL	NAME
C61, C62, C63	SMOOTHING CAPACITOR	L61	REACTOR	RT68	OUTDOOR HEAT EXCHANGER TEMP. THERMISTOR.
DB61, DB65	DIODE MODULE	MC	COMPRESSOR		
F701, F801, F901	FUSE (T3.15AL250V)	MF	FAN MOTOR	TB1, TB2	TERMINAL BLOCK
H	DEFROST HEATER(OPTION PARTS)	PTC64, PTC65	CIRCUIT PROTECTION	TR821	SWITCHING POWER TRANSISTOR
IC802	POWER DEVICE	RT61	DEFROST THERMISTOR	T801	TRANSFORMER
IPM, IC932	POWER MODULE	RT62	DISCHARGE TEMP. THERMISTOR	X63, X64, X66	RELAY
LED	LED	RT64	FIN TEMP. THERMISTOR	21S4	REVERSING VALVE COIL
LEV	EXPANSION VALVE COIL	RT65	AMBIENT TEMP. THERMISTOR	26H	HEATER PROTECTOR(OPTION PARTS)

MUZ-FE09NAH MUZ-FE12NAH

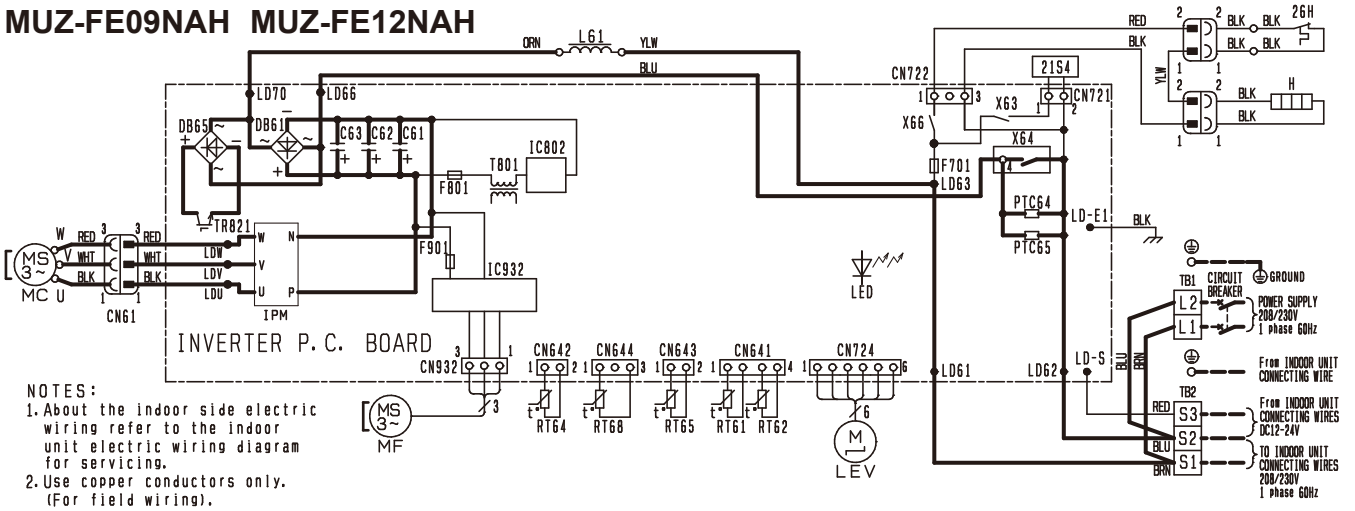

NOTES:
1. About the indoor side electric wiring refer to the indoor unit electric wiring diagram for servicing.
2. Use copper conductors only. (For field wiring).

SYMBOL	NAME	SYMBOL	NAME	SYMBOL	NAME
C61, C62, C63	SMOOTHING CAPACITOR	L61	REACTOR	RT68	OUTDOOR HEAT EXCHANGER TEMP. THERMISTOR.
DB61, DB65	DIODE MODULE	MC	COMPRESSOR		
F701, F801, F901	FUSE (T3.15AL250V)	MF	FAN MOTOR	TB1, TB2	TERMINAL BLOCK
H	DEFROST HEATER	PTC64, PTC65	CIRCUIT PROTECTION	TR821	SWITCHING POWER TRANSISTOR
IC802	POWER DEVICE	RT61	DEFROST THERMISTOR	T801	TRANSFORMER
IPM, IC932	POWER MODULE	RT62	DISCHARGE TEMP. THERMISTOR	X63, X64, X66	RELAY
LED	LED	RT64	FIN TEMP. THERMISTOR	21S4	REVERSING VALVE COIL
LEV	EXPANSION VALVE COIL	RT65	AMBIENT TEMP. THERMISTOR	26H	HEATER PROTECTOR

MUZ-FE18NA

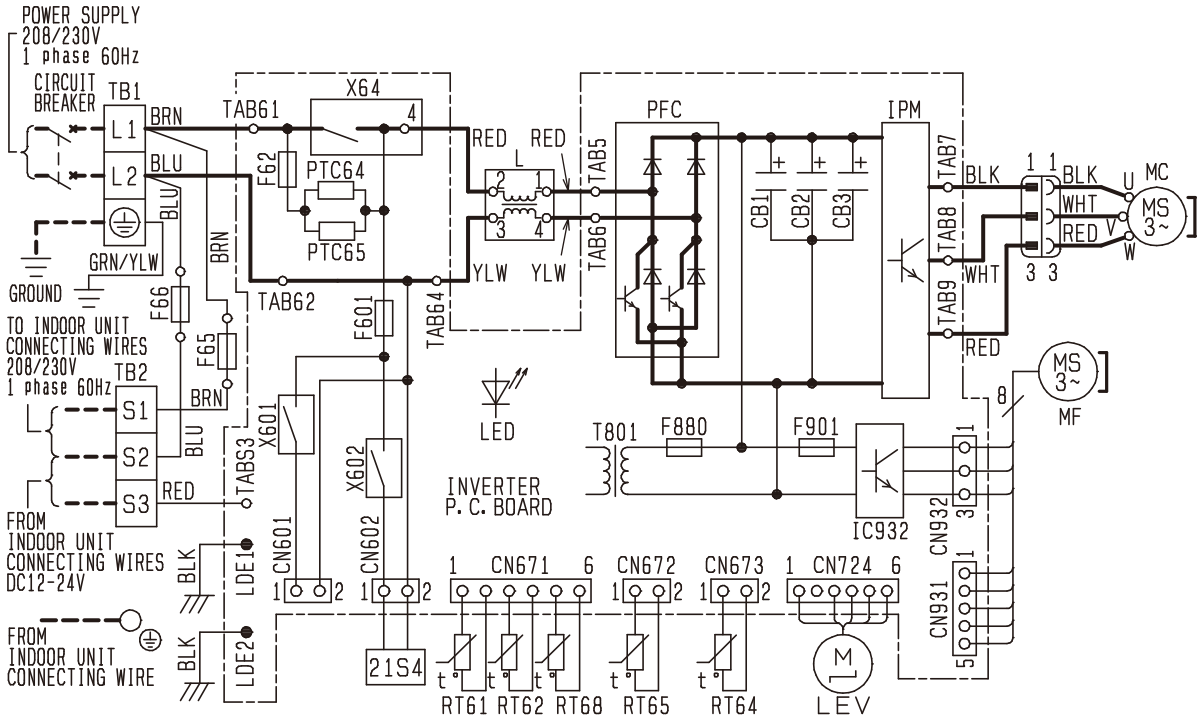

SYMBOL	NAME	SYMBOL	NAME
CB1~3	SMOOTHING CAPACITOR	PTC64	CIRCUIT PROTECTION
F601	FUSE (T3.15AL250V)	PTC65	CIRCUIT PROTECTION
F62	FUSE (T2AL250V)	RT61	DEFROST THERMISTOR
F65, F66	FUSE (T6.3AL250V)	RT62	DISCHARGE TEMP. THERMISTOR
F880	FUSE (T3.15AL250V)	RT64	FIN TEMP. THERMISTOR
F901	FUSE (T3.15AL250V)	RT65	AMBIENT TEMP. THERMISTOR
IC932	INTELLIGENT POWER MODULE	RT68	OUTDOOR HEAT EXCHANGER TEMP. THERMISTOR
IPM	INTELLIGENT POWER MODULE		
L	REACTOR	TB1, TB2	TERMINAL BLOCK
LEV	EXPANSION VALVE COIL	T801	TRANSFORMER
MC	COMPRESSOR	X601, X602	RELAY
MF	FAN MOTOR	X64	RELAY
PFC	POWER FACTOR CONTROLLER	21S4	REVERSING VALVE SOLENOID COIL

NOTES 1. About the indoor side electric wiring, refer to the indoor unit electric wiring diagram for servicing.
2. Use copper conductors only(for field wiring).
3. Symbols indicate. ☐☐☐ :Terminal block

6 REFRIGERANT SYSTEM DIAGRAM

MUZ-FE09NA MUZ-FE09NAH MUZ-FE12NA MUZ-FE12NA1 MUZ-FE12NAH

Unit: inch

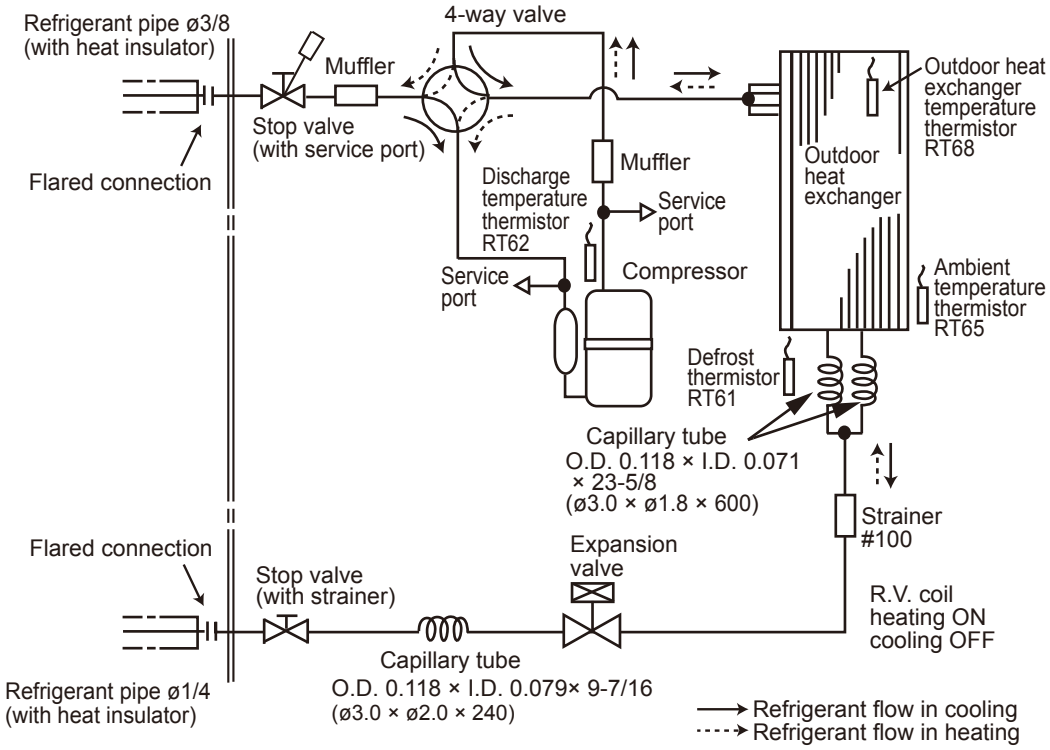

MUZ-FE18NA

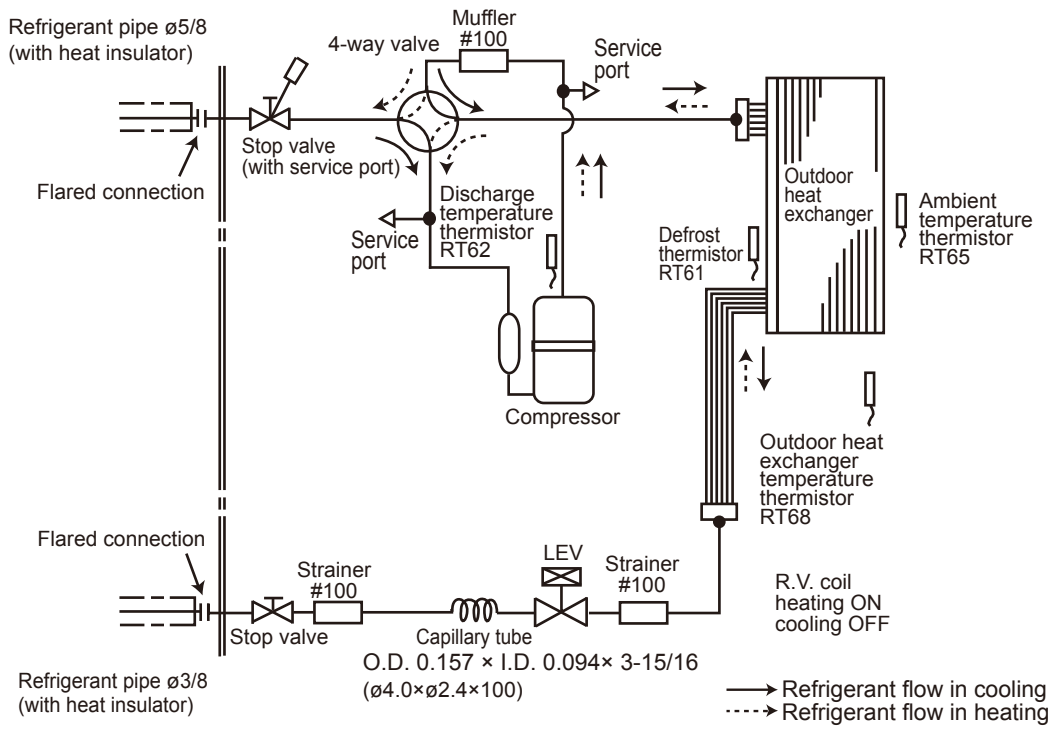

MAX. REFRIGERANT PIPING LENGTH and MAX. HEIGHT DIFFERENCE

Model	Refrigerant piping: ft.		Piping size O.D: in.	
	Max. Length A	Max. Height difference B	Gas	Liquid
MUZ-FE09NA **MUZ-FE09NAH** **MUZ-FE12NA** **MUZ-FE12NA1** **MUZ-FE12NAH**	65	40	3/8	1/4
MUZ-FE18NA	100	50	5/8	3/8

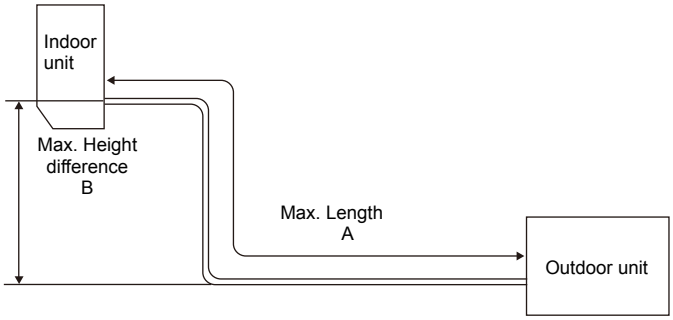

ADDITIONAL REFRIGERANT CHARGE (R410A: oz.)

NOTE: Refrigerant piping exceeding 25 ft. requires additional refrigerant charge according to the calculation.

Model	Outdoor unit precharged	Refrigerant piping length (one way): ft.					
		25	30	40	50	60	65
MUZ-FE09NA **MUZ-FE09NAH** **MUZ-FE12NA** **MUZ-FE12NA1** **MUZ-FE12NAH**	2 lb. 9 oz.	0	1.62	4.86	8.10	11.34	12.96

Calculation: X oz. = 1.62/5 oz./ft. × (Refrigerant piping length (ft.) - 25)

NOTE: Refrigerant piping exceeding 33 ft. requires additional refrigerant charge according to the calculation.

Model	Outdoor unit precharged	Refrigerant piping length (one way): ft.							
		33	40	50	60	70	80	90	100
MUZ-FE18NA	4 lb. 3 oz.	0	4.14	10.06	15.98	21.90	27.82	33.74	39.66

Calculation: X oz. = 2.96/5 oz./ft. × (Refrigerant piping length (ft.) - 33)

7 DATA

MUZ-FE09NA MUZ-FE09NAH MUZ-FE12NA MUZ-FE12NA1 MUZ-FE12NAH MUZ-FE18NA

7-1. PERFORMANCE DATA

1) COOLING CAPACITY

Model	Indoor air IWB (˚F)	Outdoor intake air DB temperature (˚F) 75 TC	75 SHC	75 TPC	85 TC	85 SHC	85 TPC	95 TC	95 SHC	95 TPC	105 TC	105 SHC	105 TPC	115 TC	115 SHC	115 TPC
MUZ-FE09NA MUZ-FE09NAH	71	11.0	6.9	0.58	10.3	6.5	0.63	9.7	6.1	0.68	9.0	5.6	0.72	8.3	5.2	0.75
	67	10.4	7.9	0.55	9.7	7.4	0.60	9.0	6.8	0.65	8.4	6.4	0.69	7.7	5.8	0.72
	63	9.8	8.8	0.52	9.1	8.1	0.58	8.5	7.6	0.62	7.7	6.9	0.66	7.0	6.3	0.69
MUZ-FE12NA MUZ-FE12NA1 MUZ-FE12NAH	71	14.7	8.8	0.85	13.7	8.2	0.94	12.9	7.7	1.01	12.0	7.2	1.06	11.0	6.6	1.10
	67	13.9	10.2	0.81	13.0	9.5	0.89	12.0	8.8	0.96	11.2	8.1	1.02	10.3	7.5	1.07
	63	13.1	11.3	0.77	12.1	10.5	0.85	11.3	9.7	0.92	10.3	8.9	0.98	9.4	8.1	1.02
MUZ-FE18NA	71	22.1	15.6	1.13	20.6	14.6	1.24	19.4	13.7	1.33	18.0	12.7	1.40	16.6	11.7	1.46
	67	20.9	17.5	1.07	19.4	16.3	1.17	18.0	15.1	1.27	16.7	14.1	1.35	15.4	12.9	1.41
	63	19.6	19.1	1.02	18.2	17.7	1.12	16.9	16.5	1.21	15.4	15.0	1.30	14.0	13.7	1.35

NOTE: 1. IWB : Intake air wet-bulb temperature TC : Total Capacity (x10^3 Btu/h)
SHC : Sensible Heat Capacity (x10^3 Btu/h) TPC : Total Power Consumption (kW)
2. SHC is based on 80˚F of indoor Intake air DB temperature.

2) COOLING CAPACITY CORRECTIONS

	Refrigerant piping length (one way: ft.) 25 (std.)	40	65	100
MUZ-FE09NA MUZ-FE09NAH MUZ-FE12NA MUZ-FE12NA1 MUZ-FE12NAH	1.0	0.954	0.878	-
MUZ-FE18NA	1.0	0.954	0.878	0.771

3) HEATING CAPACITY

Model	Indoor air IDB (˚F)	Outdoor intake air WB temperature (˚F) 5 TC	5 TPC	15 TC	15 TPC	25 TC	25 TPC	35 TC	35 TPC	43 TC	43 TPC	45 TC	45 TPC	55 TC	55 TPC
MUZ-FE09NA	75	4.8	0.44	6.3	0.56	7.9	0.66	9.4	0.73	10.6	0.77	11.0	0.78	12.4	0.81
	70	5.2	0.42	6.7	0.54	8.2	0.64	9.6	0.71	10.9	0.75	11.2	0.77	12.7	0.80
	65	5.5	0.41	6.9	0.52	8.6	0.62	10.0	0.69	11.2	0.73	11.6	0.74	13.0	0.78
MUZ-FE09NAH	75	4.8	0.57	6.3	0.69	7.9	0.79	9.4	0.73	10.6	0.77	11.0	0.78	12.4	0.81
	70	5.2	0.55	6.7	0.67	8.2	0.77	9.6	0.71	10.9	0.75	11.2	0.77	12.7	0.80
	65	5.5	0.54	6.9	0.65	8.6	0.75	10.0	0.69	11.2	0.73	11.6	0.74	13.0	0.78
MUZ-FE12NA MUZ-FE12NA1	75	6.0	0.58	7.9	0.73	9.9	0.86	11.8	0.96	13.3	1.00	13.7	1.02	15.5	1.06
	70	6.5	0.55	8.4	0.71	10.2	0.84	12.0	0.93	13.6	0.98	14.0	1.00	15.8	1.04
	65	6.8	0.53	8.6	0.68	10.7	0.81	12.4	0.91	14.0	0.96	14.4	0.97	16.2	1.02
MUZ-FE12NAH	75	6.0	0.71	7.9	0.86	9.9	0.99	11.8	0.96	13.3	1.00	13.7	1.02	15.5	1.06
	70	6.5	0.68	8.4	0.84	10.2	0.97	12.0	0.93	13.6	0.98	14.0	1.00	15.8	1.04
	65	6.8	0.66	8.6	0.81	10.7	0.94	12.4	0.91	14.0	0.96	14.4	0.97	16.2	1.02
MUZ-FE18NA	75	9.5	0.91	12.5	1.15	15.7	1.35	18.7	1.50	21.1	1.58	21.7	1.60	24.6	1.66
	70	10.3	0.87	13.3	1.11	16.2	1.32	19.1	1.46	21.6	1.54	22.2	1.57	25.2	1.63
	65	10.8	0.83	13.6	1.06	17.0	1.27	19.8	1.42	22.2	1.50	22.9	1.52	25.7	1.60

NOTE: 1. IDB : Intake air dry-bulb temperature
TC : Total Capacity (x10^3 Btu/h) TPC : Total Power Consumption (kW)
2. Above data is for heating operation without any frost.

How to operate with fixed operational frequency of the compressor.

1. Press the EMERGENCY OPERATION switch on the front of the indoor unit, and select either EMERGENCY COOL mode or EMERGENCY HEAT mode before starting to operate the air conditioner.
2. The compressor starts with operational frequency.
3. The fan speed of the indoor unit is High.
4. This operation continues for 30 minutes.
5. In order to release this operation, press the EMERGENCY OPERATION switch twice or once, or press any button on the remote controller.

7-2. PERFORMANCE CURVE

Cooling

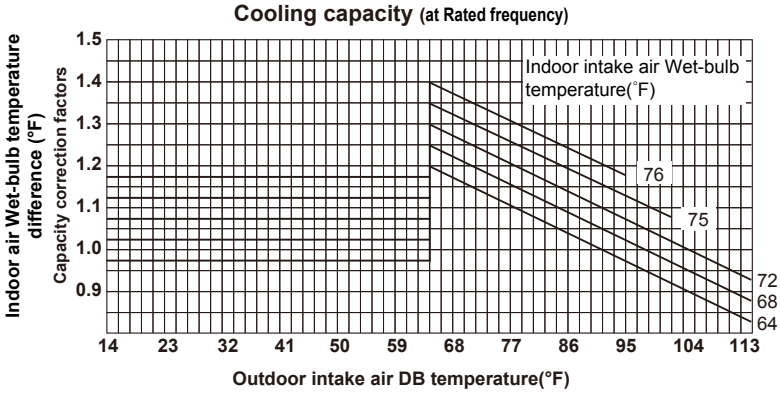

MUZ-FE09NA MUZ-FE09NAH

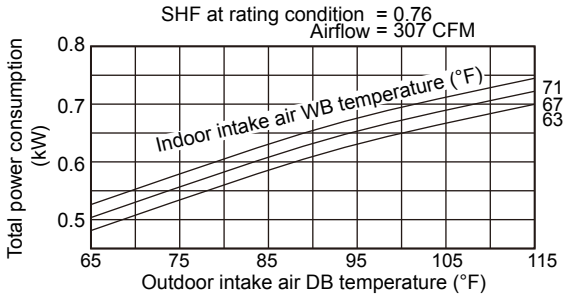

MUZ-FE12NA MUZ-FE12NA1 MUZ-FE12NAH

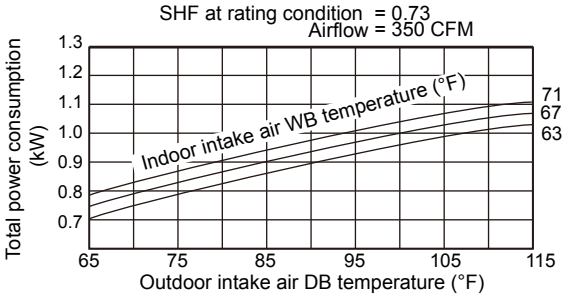

MUZ-FE18NA

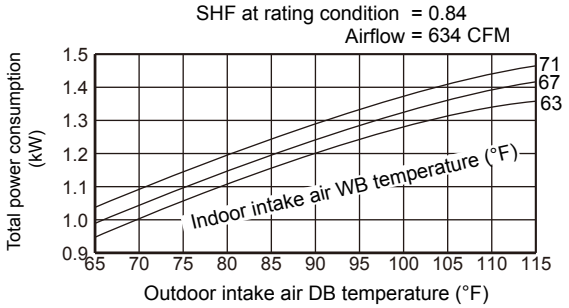

This value of frequency is not the same as the actual frequency in operating. Refer to 7-5 and 7-6 for the relationships between frequency and capacity.

Heating

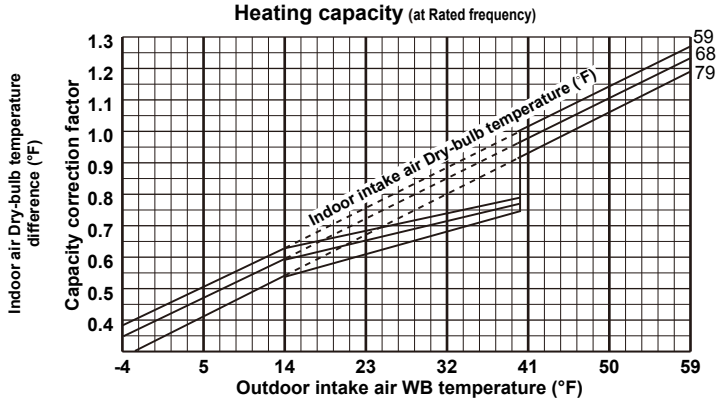

MUZ-FE09NA

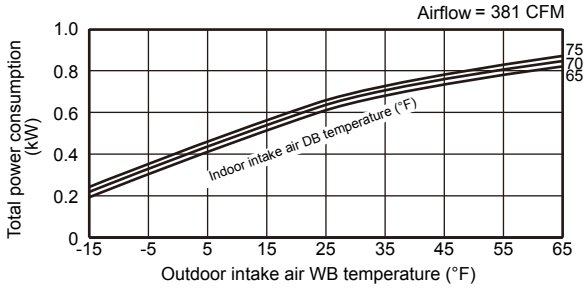

MUZ-FE12NA MUZ-FE12NA1

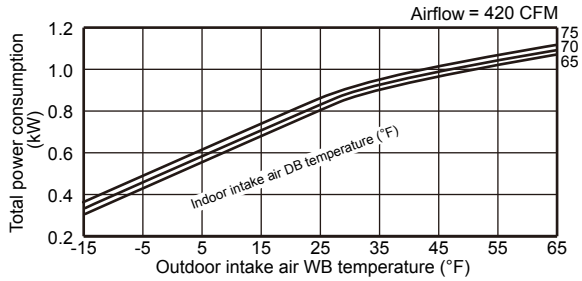

MUZ-FE09NAH

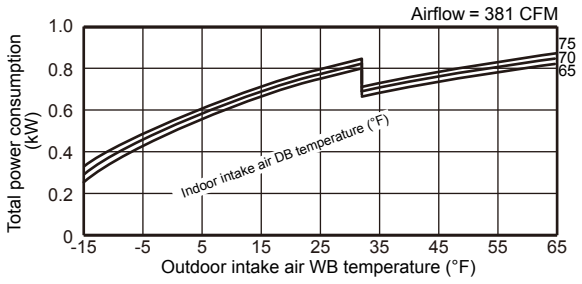

MUZ-FE12NAH

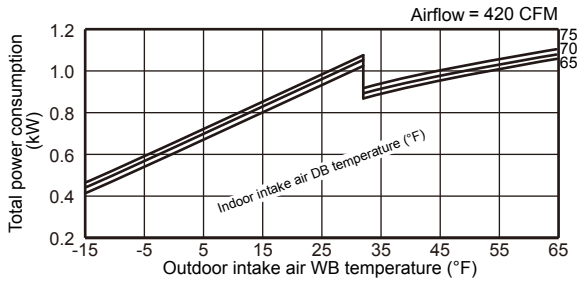

MUZ-FE18NA

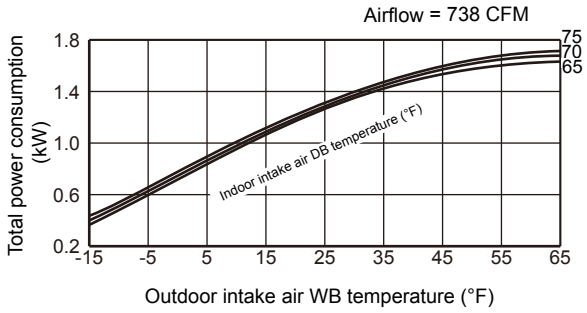

This value of frequency is not the same as the actual frequency in operating. Refer to 7-5 and 7-6 for the relationships between frequency and capacity.

7-3. CONDENSING PRESSURE

Cooling

Data is based on the condition of indoor humidity 50 %.
Air flow should be set to High speed.

MUZ-FE09NA MUZ-FE09NAH

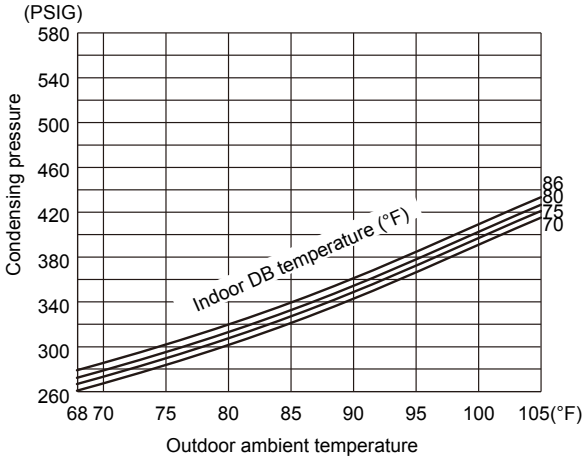

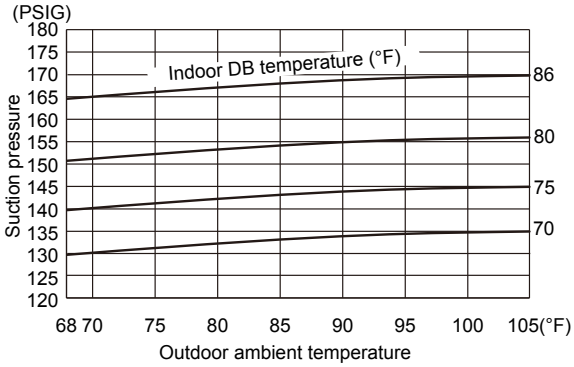

MUZ-FE12NA MUZ-FE12NA1 MUZ-FE12NAH

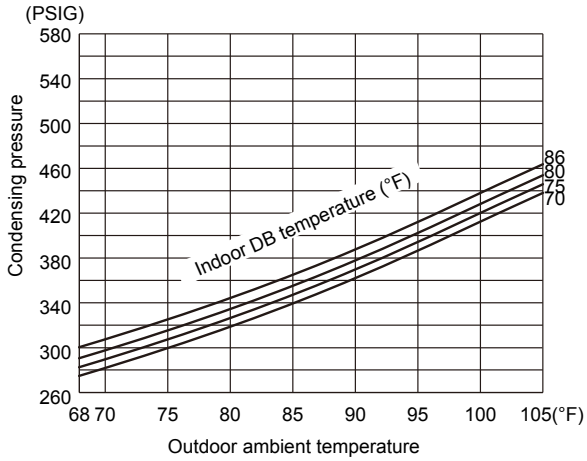

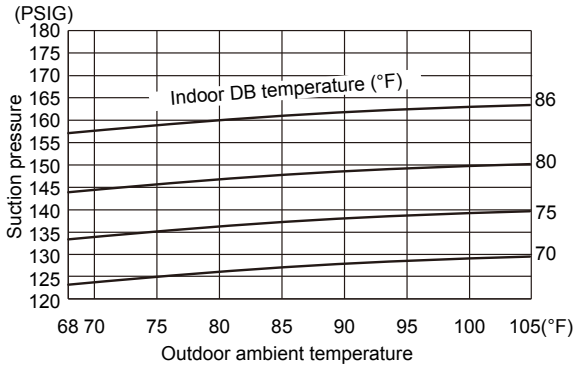

MUZ-FE18NA

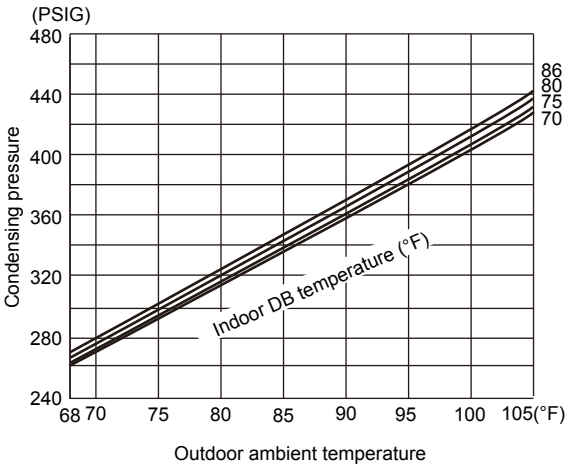

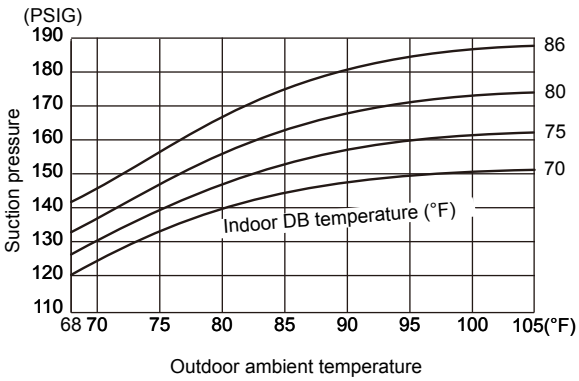

Heating

Data is based on the condition of outdoor humidity 75%.
Air flow should be set to High speed.
Data is for heating operation without any frost.

MUZ-FE09NA MUZ-FE09NAH

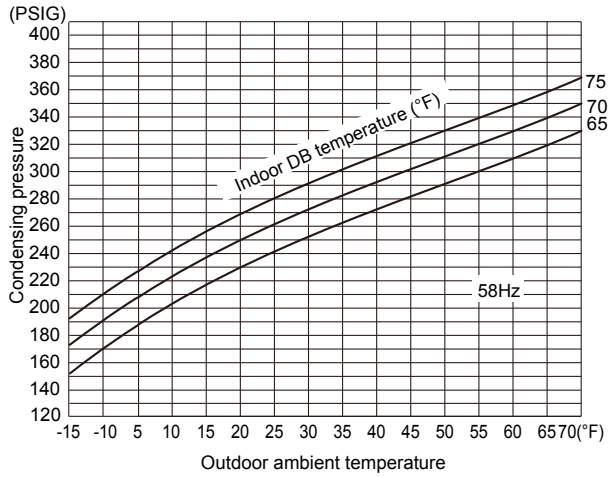

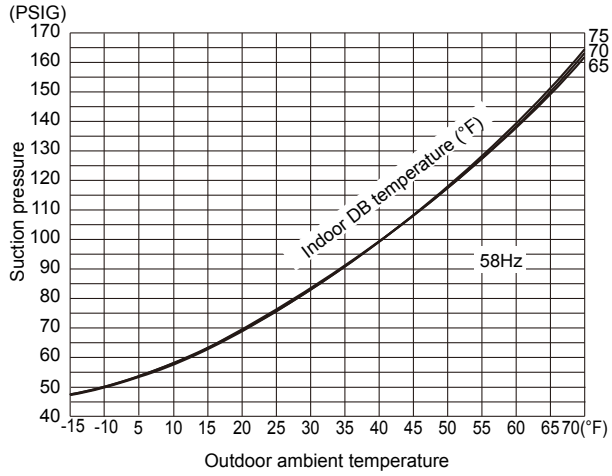

MUZ-FE12NA MUZ-FE12NA1 MUZ-FE12NAH

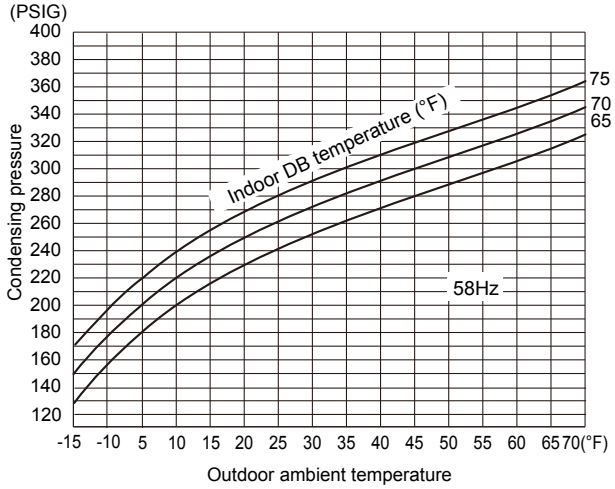

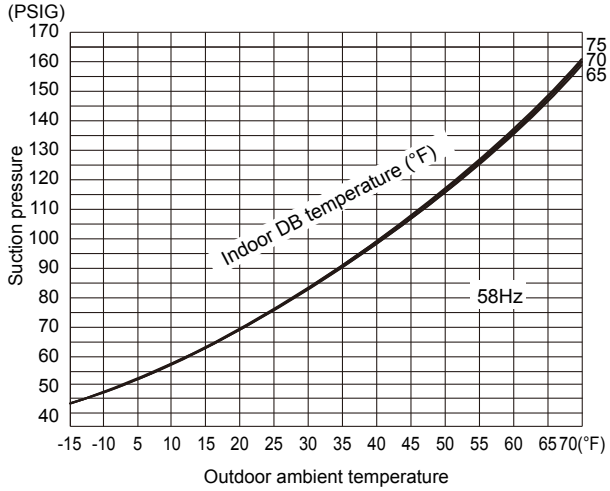

MUZ-FE18NA

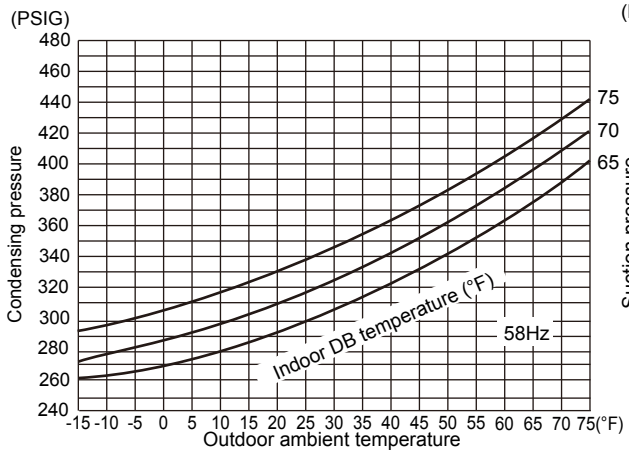

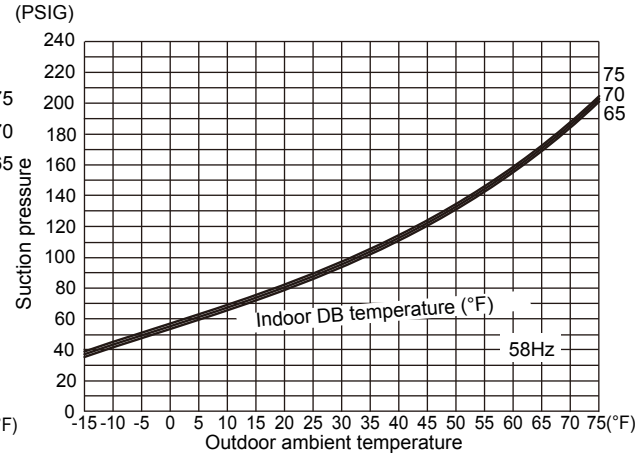

7-4. STANDARD OPERATION DATA

Model				MSZ-FE09NA		MSZ-FE12NA		MSZ-FE18NA	
Item			Unit	Cooling	Heating	Cooling	Heating	Cooling	Heating
Total	Capacity		Btu/h	9,000	10,900	12,000	13,600	18,000	21,600
	SHF		—	0.76	—	0.73	—	0.84	—
	Input		kW	0.580	0.710	0.930	0.950	1.800	2.200
	Rated frequency		Hz	34	42	51	52.5	50.5	62.5
Electrical circuit	Indoor unit			**MSZ-FE09NA**		**MSZ-FE12NA**		**MSZ-FE18NA**	
	Power supply		V, phase, Hz	208/230, 1, 60					
	Input		kW	0.018	0.024	0.024	0.030	0.058	
	Fan motor current		A	0.19/0.17	0.25/0.23	0.25/0.23	0.32/0.29	0.56/0.51	
	Outdoor unit			**MUZ-FE09NA MUZ-FE09NAH**		**MUZ-FE12NA MUZ-FE12NA1 MUZ-FE12NAH**		**MUZ-FE18NA**	
	Power supply		V, phase, Hz	208/230, 1, 60					
	Input		kW	0.562	0.686	0.906	0.920	1.212	1.482
	Comp. current		A	2.38/2.15	2.98/2.70	4.05/3.66	4.12/3.72	4.47/4.04	5.72/5.17
	Fan motor current		A	0.35/0.32				1.16/1.05	1.13/1.02
Refrigerant circuit	Condensing pressure		PSIG	376	355	402	392	373	357
	Suction pressure		PSIG	154	108	148	104	151	107
	Discharge temperature		˚F	142	145	160	158	150	159
	Condensing temperature		˚F	112	108	117	115	111	105
	Suction temperature		˚F	53	36	53	34	58	41
	Comp. shell bottom temperature		˚F	144	128	146	129	132	136
	Ref. pipe length		ft.	25					
	Refrigerant charge (R410A)			2 lb. 9 oz.				4 lb 3 oz.	
Indoor unit	Intake air temperature	DB	˚F	80	70	80	70	80	70
		WB	˚F	67	60	67	60	67	60
	Discharge air temperature	DB	˚F	59	99	58	101	59	102
		WB	˚F	56	—	55	—	56	—
	Fan speed (High)		rpm	1,020	1,120	1,120	1,220	1,300	
	Airflow (High)		CFM	307 (Wet)	381	350 (Wet)	420	634 (Wet)	738
Outdoor unit	Intake air temperature	DB	˚F	95	47	95	47	95	47
		WB	˚F	—	43	—	43	—	43
	Fan speed		rpm	810	870	810	870	840	810
	Airflow		CFM	1,102	1,187	1,102	1,187	1,769	1,701

7-5. CAPACITY AND INPUT CORRECTION BY INVERTER OUTPUT FREQUENCY

MUZ-FE09NA MUZ-FE09NAH

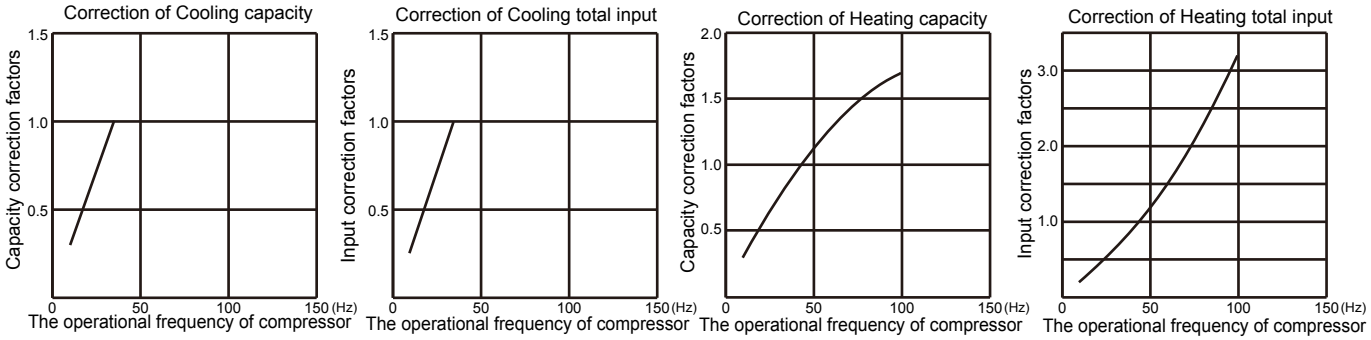

MUZ-FE12NA MUZ-FE12NA1 MUZ-FE12NAH

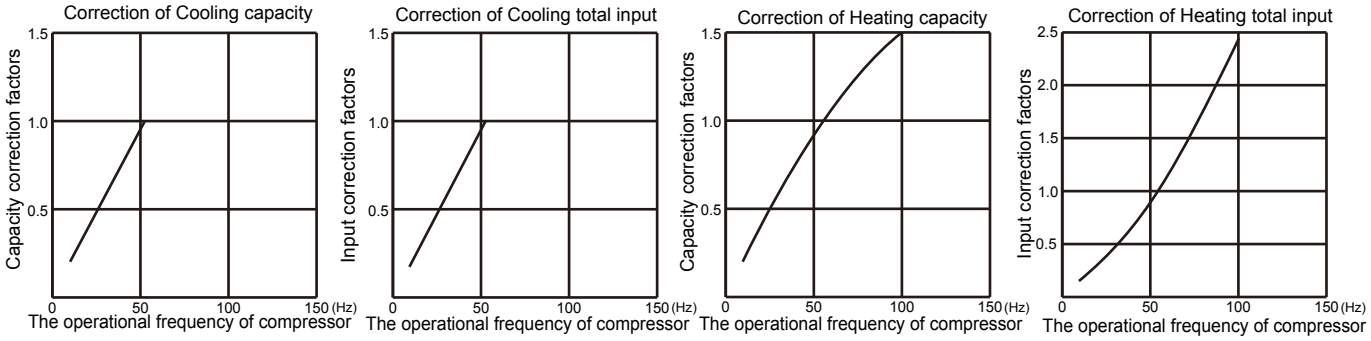

MUZ-FE18NA

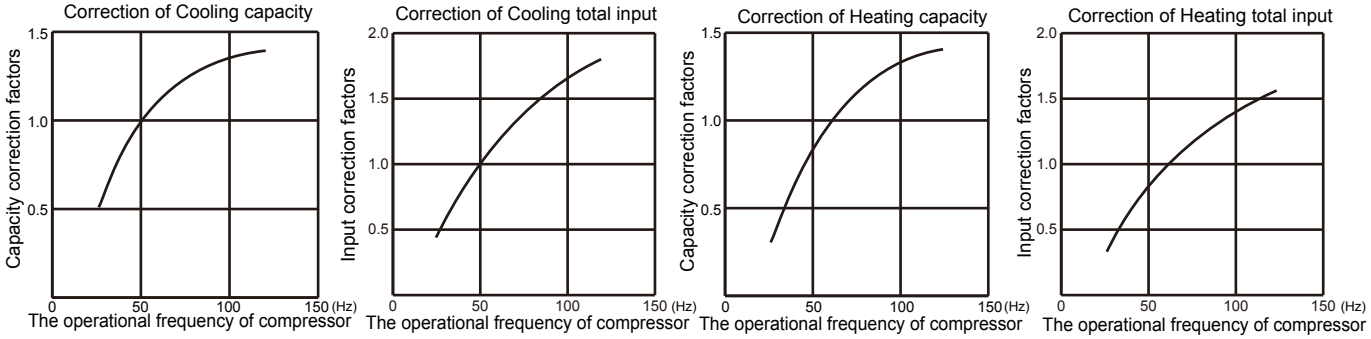

7-6. HOW TO OPERATE FIXED-FREQUENCY OPERATION (Test run operation)

1. Press EMERGENCY OPERATION switch to start COOL or HEAT mode (COOL: Press once, HEAT: Press twice).
2. Test run operation starts and continues to operate for 30 minutes.
3. Compressor operates at rated frequency in COOL mode or 58 Hz in HEAT mode.
4. Indoor fan operates at High speed.
5. After 30 minutes, test run operation finishes and EMERGENCY OPERATION starts (operation frequency of compressor varies).
6. To cancel test run operation (EMERGENCY OPERATION), press EMERGENCY OPERATION switch or any button on remote controller.

8 ACTUATOR CONTROL

MUZ-FE09NA MUZ-FE09NAH MUZ-FE12NA MUZ-FE12NA1 MUZ-FE12NAH MUZ-FE18NA

8-1. OUTDOOR FAN MOTOR CONTROL

The fan motor turns ON/OFF, interlocking with the compressor.
[ON] The fan motor turns ON 5 seconds before the compressor starts up.
[OFF] The fan motor turns OFF 15 seconds after the compressor has stopped running.

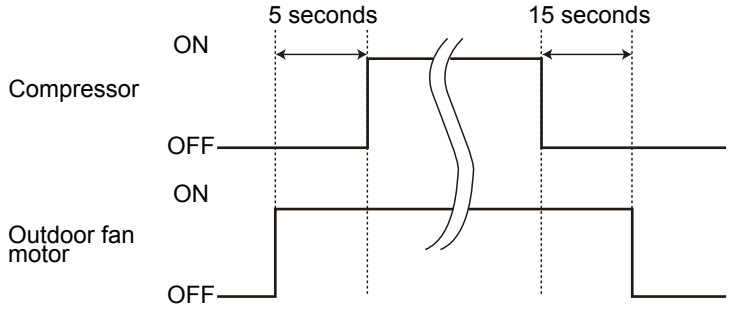

8-2. R.V. COIL CONTROL

Heating · · · · · · · · · · · · · · · · · · ON
Cooling · · · · · · · · · · · · · · · · · · OFF
Dry · OFF

NOTE: The 4-way valve reverses for 5 seconds right before start-up of the compressor.

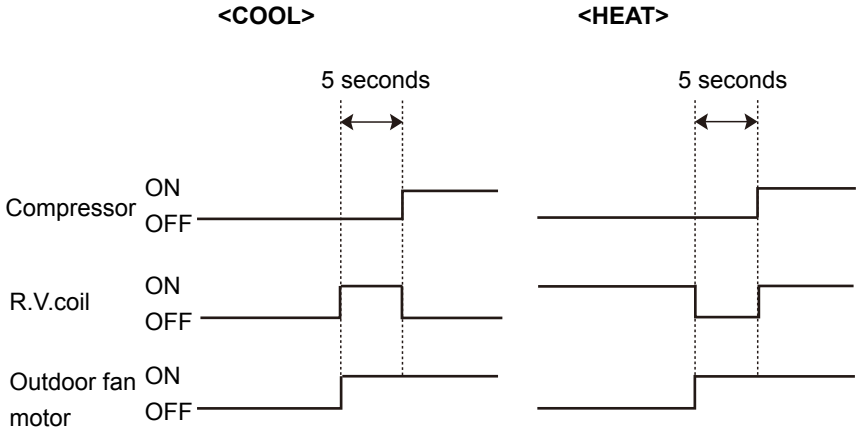

8-3. RELATION BETWEEN MAIN SENSOR AND ACTUATOR

Sensor	Purpose	Actuator				
		Compressor	LEV	Outdoor fan motor	R.V. coil	Indoor fan motor
Discharge temperature thermistor	Protection	○	○			
Indoor coil temperature thermistor	Cooling: Coil frost prevention	○				
	Heating: High pressure protection	○	○			
Defrost thermistor	Cooling: High pressure protection	○	○			
	Heating: Defrosting	○	○	○	○	○
Fin temperature thermistor	Protection	○		○		
Outdoor heat exchanger temperature thermistor	High pressure protection	○	○	○		
Ambient temperature thermistor	Low ambient temperature operation	○	○	○		

9 SERVICE FUNCTIONS

MUZ-FE09NA MUZ-FE09NAH MUZ-FE12NA MUZ-FE12NA1 MUZ-FE12NAH MUZ-FE18NA

9-1. CHANGE IN DEFROST SETTING

Changing defrost finish temperature

<JS> To change the defrost finish temperature, cut/solder the JS wire of the outdoor inverter P.C. board (Refer to 10-6.1.).

Jumper		Defrost finish temperature	
		MUZ-FE09/12NA MUZ-FE12NA1 MUZ-FE09/12NAH	MUZ-FE18NA
JS	Soldered (Initial setting)	41°F (5°C)	50°F (10°C)
	None (Cut)	50°F (10°C)	64°F (18°C)

9-2. PRE-HEAT CONTROL SETTING

PRE-HEAT CONTROL

When moisture gets into the refrigerant cycle, it may interfere the start-up of the compressor at low outside temperature. The pre-heat control prevents this interference. The pre-heat control turns ON when outside temperature is 68°F (20°C) or below. When pre-heat control is turned ON, compressor is energized. (About 50 W)

<JK> To activate the pre-heat control, cut the JK wire of the inverter P.C. board (Refer to 10-6.1.).

NOTE: When the inverter P.C. board is replaced, check the Jumper wires, and cut/solder them if necessary.

10 TROUBLESHOOTING

MUZ-FE09NA MUZ-FE09NAH MUZ-FE12NA MUZ-FE12NA1 MUZ-FE12NAH MUZ-FE18NA

10-1. CAUTIONS ON TROUBLESHOOTING

1. Before troubleshooting, check the following

1) Check the power supply voltage.
2) Check the indoor/outdoor connecting wire for miswiring.

2. Take care of the following during servicing

1) Before servicing the air conditioner, be sure to turn OFF the main unit first with the remote controller, then after confirming the horizontal vane is closed, turn off the breaker and/or disconnect the power plug.
2) Be sure to turn OFF the power supply before removing the front panel, the cabinet, the top panel, and the electronic control P.C. board.
3) When removing the electrical parts, be careful of the residual voltage of smoothing capacitor.
4) When removing the electronic control P.C. board, hold the edge of the board with care NOT to apply stress on the components.
5) When connecting or disconnecting the connectors, hold the connector housing. DO NOT pull the lead wires.

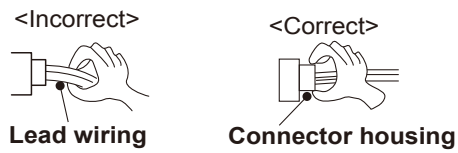

3. Troubleshooting procedure

1) Check if the OPERATION INDICATOR lamp on the indoor unit is blinking on and off to indicate an abnormality. To make sure, check how many times the OPERATION INDICATOR lamp is blinking on and off before starting service work.
2) Before servicing, verify that all connectors and terminals are connected properly.
3) When the electronic control P.C. board seems to be defective, check for disconnection of the copper foil pattern and burnt or discolored components.
4) Refer to 10-2 and 10-3.

10-2. FAILURE MODE RECALL FUNCTION

Outline of the function

This air conditioner can memorize the abnormal condition which has occurred once.

Even though LED indication listed on the troubleshooting check table (10-3.) disappears, the memorized failure details can be recalled.

1. Flow chart of failure mode recall function for the indoor/outdoor unit

Operational procedure

MSZ-FE09NA
MSZ-FE12NA

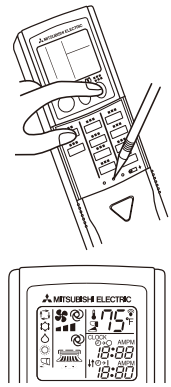

MSZ-FE18NA

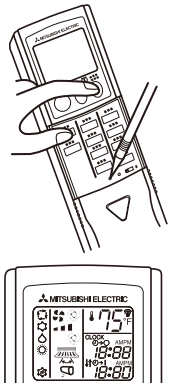

The cause of abnormality cannot be found because the abnormality does not recur.

Setting up the failure mode recall function

Turn ON the power supply.
<Preparation of the remote controller>
① While pressing both OPERATION SELECT button and TOO COOL button on the remote controller at the same time, press RESET button.
② First, release RESET button.
Hold down the other two buttons for another 3 seconds. Make sure that the indicators on the LCD screen shown in the right figure are all displayed. Then release the buttons.

Press OPERATE/STOP (ON/OFF) button of the remote controller (the set temperature is displayed) with the remote controller headed towards the indoor unit. *1

Does POWER lamp (**MSZ-FE09/12NA**)/the upper lamp of OPERATION INDICATOR lamp (**MSZ-FE18NA**) on the indoor unit blink at the interval of 0.5 seconds?
Blinks: Either indoor or outdoor unit is abnormal. Beep is emitted at the same timing as the blinking of POWER lamp (**MSZ-FE09/12NA**)/the upper lamp of OPERATION INDICATOR lamp (**MSZ-FE18NA**). *2

No (OFF) →
Indoor unit is normal.
But the outdoor unit might be abnormal because there are some abnormalities that cannot be recalled with this way.
Check if outdoor unit is abnormal according to the detailed outdoor unit failure mode recall function. (Refer to 10-2.2)

Yes (Blinks)

*1. Regardless of normal or abnormal condition, a short beep is emitted once the signal is received.

Judgment of indoor/outdoor abnormality

Before blinking, does POWER lamp (**MSZ-FE09/12NA**)/the upper lamp of OPERATION INDICATOR lamp (**MSZ-FE18NA**) stay ON for 3 seconds?
When it stays ON for 3 seconds (without beep):
The outdoor unit is abnormal.

Yes →
The outdoor unit is abnormal.
Check the blinking pattern, and identify the abnormal point by referring to the table of outdoor unit failure mode recall function. (Refer to 10-2.3)
Make sure to check at least two consecutive blinking cycles. *3

No →
The indoor unit is abnormal.
Check the blinking pattern, and identify the abnormal point by referring to the table of indoor unit failure mode recall function. (Refer to indoor unit service manual.) Make sure to check at least two consecutive blinking cycles. *2

Releasing the failure mode recall function

Release the failure mode recall function by the following procedures.
Turn OFF the power supply and turn it ON again.
Press RESET button of the remote controller.

Repair the failure parts.

Deleting the memorized abnormal condition

① After repairing the unit, recall the failure mode again according to "Setting up the failure mode recall function" mentioned above.
② Press OPERATE/STOP (ON/OFF) button of the remote controller (the set temperature is displayed) with the remote controller headed towards the indoor unit.
③ Press EMERGENCY OPERATION switch so that the memorized abnormal condition is deleted.
④ Release the failure mode recall function according to "Releasing the failure mode recall function" mentioned above.

NOTE: 1. Make sure to release the failure mode recall function after it is set up, otherwise the unit cannot operate properly.
2. If the abnormal condition is not deleted from the memory, the last abnormal condition is kept memorized.

*2. Blinking pattern when the indoor unit is abnormal:

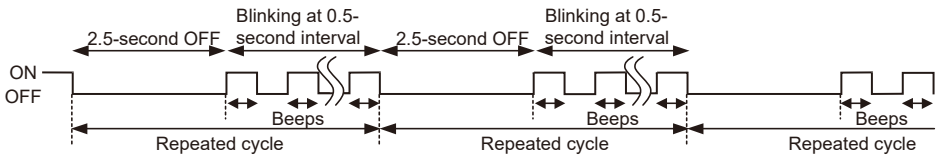

*3.Blinking pattern when the outdoor unit is abnormal:

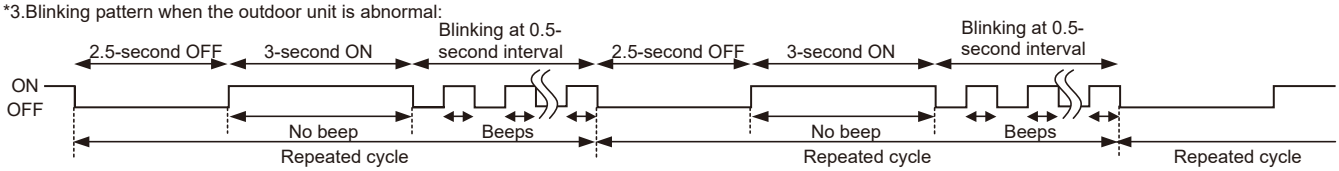

2. Flow chart of the detailed outdoor unit failure mode recall function

Operational procedure

The outdoor unit might be abnormal.
Check if outdoor unit is abnormal according to the following procedures.

↓

Make sure that the remote controller is set to the failure mode recall function.

↓

With the remote controller headed towards the indoor unit, press TOO COOL or TOO WARM button to adjust the set temperature to 77˚F (25˚C). *1

*1. Regardless of normal or abnormal condition, 2 short beeps are emitted as the signal is received.

↓

Does POWER lamp(**MSZ-FE09/12NA**)/the upper lamp of OPERATION INDICATOR lamp(**MSZ-FE18NA**) on the indoor unit blink at the interval of 0.5 seconds?
Blinks: The outdoor unit is abnormal. Beep is emitted at the same timing as the blinking of POWER lamp (**MSZ-FE09/12NA**)/the upper lamp of OPERATION INDICATOR lamp (**MSZ-FE-18NA**). *2

No (OFF) → The outdoor unit is normal. → Release the failure mode recall function according to the left mentioned procedure.

Yes (Blinks) ↓

The outdoor unit is abnormal.
Check the blinking pattern, and identify the abnormal point by referring to the table of outdoor unit failure mode recall function (10-2.3.).
Make sure to check at least two consecutive blinking cycles. *2

↓

Releasing the failure mode recall function

Release the failure mode recall function by the following procedures.
Turn OFF the power supply and turn it ON again.
Press RESET button of the remote controller.

↓

Repair the failure parts.

↓

Deleting the memorized abnormal condition

① After repairing the unit, recall the failure mode again according to "Setting up the failure mode recall function" (10-2.1.).
② Press OPERATE/STOP (ON/OFF) button of the remote controller (the set temperature is displayed) with the remote controller headed towards the indoor unit.
③ Press EMERGENCY OPERATION switch so that the memorized abnormal condition is deleted.
④ Release the failure mode recall function according to "Releasing the failure mode recall function" mentioned above.

NOTE: 1. Make sure to release the failure mode recall function after it is set up, otherwise the unit cannot operate properly.
2. If the abnormal condition is not deleted from the memory, the last abnormal condition is kept memorized.

*2.Blinking pattern when outdoor unit is abnormal:

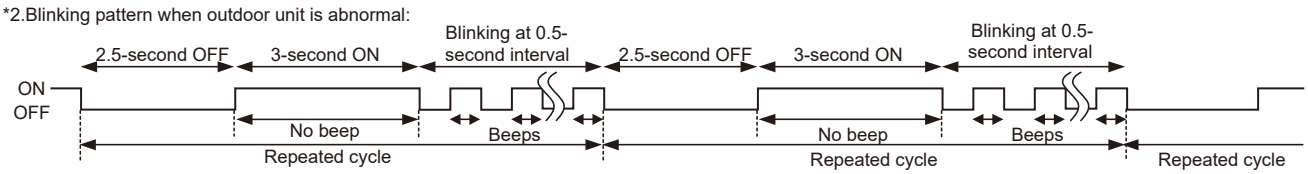

3. Table of outdoor unit failure mode recall function

OPERATION INDICATOR POWER lamp Upper lamp (Indoor unit)	Abnormal point (Failure mode/protection)	LED indication (Outdoor P.C. board)	Condition	Remedy	Indoor/ outdoor unit failure mode recall function	Outdoor unit failure mode recall function
OFF	None (Normal)	—	—	—	—	—
2-time blink 2.5 seconds OFF	Outdoor power system	—	Overcurrent cut-out operates 3 consecutive times within 1 minute after the compressor gets started.	•Reconnect connectors. •Refer to 10-5. Ⓐ"How to check inverter/ compressor". •Check stop valve.	○	○
3-time blink 2.5 seconds OFF	Discharge temperature thermistor	1-time blink every 2.5 seconds	Thermistor shorts or opens during compressor running.	•Refer to 10-5.Ⓖ"Check of outdoor thermistors". Defective outdoor thermistors can be identified by checking the blinking pattern of LED.	○	○
	Defrost thermistor					
	Fin temperature thermistor	3-time blink 2.5 seconds OFF				
	P.C. board temperature thermistor	4-time blink 2.5 seconds OFF				
	Ambient temperature thermistor	2-time blink 2.5 seconds OFF				
4-time blink 2.5 seconds OFF	Overcurrent	11-time blink 2.5 seconds OFF	Large current flows into intelligent power module.	•Reconnect compressor connector. •Refer to 10-5.Ⓐ"How to check inverter/ compressor". •Check stop valve.	—	○
	Compressor synchronous abnormality (Compressor start-up failure protection)	12-time blink 2.5 seconds OFF	Waveform of compressor current is distorted.	•Reconnect compressor connector. •Refer to 10-5.Ⓐ"How to check inverter/ compressor".	—	○
5-time blink 2.5 seconds OFF	Discharge temperature	—	Temperature of discharge temperature thermistor exceeds 241°F (116°C), compressor stops. Compressor can restart if discharge temperature thermistor reads 212°F (100°C) or less 3 minutes later.	•Check refrigerant circuit and refrigerant amount. •Refer to 10-5.Ⓚ"Check of LEV".	—	○
6-time blink 2.5 seconds OFF	High pressure	—	Temperature of indoor coil thermistor exceeds 158°F (70°C) in HEAT mode. Temperature of defrost thermistor exceeds 158°F (70°C) in COOL mode.	•Check refrigerant circuit and refrigerant amount. •Check stop valve.	—	○
7-time blink 2.5 seconds OFF	Fin temperature/ P.C. board temperature	7-time blink 2.5 seconds OFF	Temperature of fin temperature thermistor on the inverter P.C. board exceeds 167 ~ 176°F (75 ~ 80°C), or temperature of P.C. board temperature thermistor on the inverter P.C. board exceeds 158 ~ 167°F (70 ~ 75°C).	•Check around outdoor unit. •Check outdoor unit air passage. •Refer to 10-5.Ⓘ"Check of outdoor fan motor".	—	○
8-time blink 2.5 seconds OFF	Outdoor fan motor	—	Outdoor fan has stopped 3 times in a row within 30 seconds after outdoor fan start-up.	•Refer to 10-5.Ⓘ"Check of outdoor fan motor". Refer to 10-5.Ⓛ"Check of inverter P.C. board".	—	○
9-time blink 2.5 seconds OFF	Nonvolatile memory data	5-time blink 2.5 seconds OFF	Nonvolatile memory data cannot be read properly.	•Replace the inverter P.C. board.	○	○
	MUZ-FE18NA Power module	6-time blink 2.5 seconds OFF	The interphase short circuit occurs in the output of the intelligent power module (IPM). The compressor winding shorts circuit.	•Refer to 10-5. Ⓐ"How to check inverter/ compressor".		
10-time blink 2.5 seconds OFF	Discharge temperature	—	Temperature of discharge temperature thermistor has been 122°F (50°C) or less for 20 minutes.	•Refer to 10-5.Ⓚ"Check of LEV". •Check refrigerant circuit and refrigerant amount.	—	○
11-time blink 2.5 seconds OFF	DC voltage	8-time blink 2.5 seconds OFF	DC voltage of inverter cannot be detected normally.	•Refer to 10-5.Ⓐ"How to check inverter/ compressor".	—	○
	Each phase current of compressor	9-time blink 2.5 seconds OFF	Each phase current of compressor cannot be detected normally.			
12-time blink 2.5 seconds OFF	Overcurrent Compressor open-phase	10-time blink 2.5 seconds OFF	Large current flows into intelligent power module (IPM). The open-phase operation of compressor is detected. The interphase short circuit occurs in the output of the intelligent power module (IPM). The compressor winding shorts circuit.	•Reconnect compressor connector. •Refer to 10-5. Ⓐ"How to check inverter/ compressor".	—	○
14-time blink 2.5 seconds OFF	Stop valve (Closed valve)	14-time blink 2.5 seconds OFF	Closed valve is detected by compressor current.	•Check stop valve	○	○

NOTE: Blinking patterns of this mode differ from the ones of Troubleshooting check table (10-3.).
OPERATION INDICATOR
POWER lamp: **MSZ-FE09/12NA**
Upper lamp: **MSZ-FE18NA**

10-3. TROUBLESHOOTING CHECK TABLE

No.	Symptom	LED indication	Abnormal point/ Condition	Condition	Remedy
1	Outdoor unit does not operate.	1-time blink every 2.5 seconds	Outdoor power system	Overcurrent cut-out operates 3 consecutive times within 1 minute after the compressor gets started, or failure of restart of compressor has repeated 24 times.	•Reconnect connector of compressor. •Refer to 10-5.Ⓐ "How to check inverter/compressor". •Check stop valve.
2			Outdoor thermistors	Discharge temperature thermistor, fin temperature thermistor, defrost thermistor, outdoor heat exchanger temperature thermistor, P.C. board temperature thermistor or ambient temperature thermistor shorts or opens during compressor running.	•Refer to 10-5.Ⓖ "Check of outdoor thermistors".
3			Outdoor control system	Nonvolatile memory data cannot be read properly. [POWER lamp (**MSZ-FE09/12NA**)/the upper lamp of OPERATION INDICATOR lamp (**MSZ-FE18NA**) of the indoor unit lights up or blinks 7 times.]	•Replace inverter P.C. board.
4		6-time blink 2.5 seconds OFF	Serial signal	The communication fails between the indoor and outdoor unit for 3 minutes.	•Refer to 10-5.Ⓜ "How to check miswiring and serial signal error.
5		11-time blink 2.5 seconds OFF	Stop valve/ Closed valve	Closed valve is detected by compressor current.	•Check stop valve.
6		14-time blink 2.5 seconds OFF	Outdoor unit (Other abnormality)	Outdoor unit is defective.	•Refer to 10-2.2. "Flow chart of the detailed outdoor unit failure mode recall function".
7	'Outdoor unit stops and restarts 3 minutes later' is repeated.	2-time blink 2.5 seconds OFF	Overcurrent protection	Large current flows into intelligent power module. **MUZ-FE09/12NA, MUZ-FE12NA1, MUZ-FE09/12NAH** *When overcurrent protection occurs within 10 seconds after compressor starts, compressor restarts after 15 seconds.	•Reconnect connector of compressor. •Refer to 10-5.Ⓐ "How to check inverter/compressor". •Check stop valve.
8		3-time blink 2.5 seconds OFF	Discharge temperature overheat protection	Temperature of discharge temperature thermistor exceeds 241°F (116°C), compressor stops. Compressor can restart if discharge temperature thermistor reads 212°F (100°C) or less 3 minutes later.	•Check refrigerant circuit and refrigerant amount. •Refer to 10-5.Ⓚ "Check of LEV".
9		4-time blink 2.5 seconds OFF	Fin temperature / P.C. board temperature thermistor overheat protection	Temperature of fin temperature thermistor on the heat sink exceeds 167 ~ 176°F (75 ~ 80°C) or temperature of P.C. board temperature thermistor on the inverter P.C. board exceeds 158 ~ 167°F (70 ~ 75°C).	•Check around outdoor unit. •Check outdoor unit air passage. •Refer to 10-5.Ⓘ "Check of outdoor fan motor".
10		5-time blink 2.5 seconds OFF	High pressure protection	Temperature of indoor coil thermistor exceeds 158°F (70°C) in HEAT mode. Temperature of outdoor heat exchanger temperature thermistor exceeds 158°F (70°C) in COOL mode.	•Check refrigerant circuit and refrigerant amount. •Check stop valve.
11		8-time blink 2.5 seconds OFF	Compressor synchronous abnormality	The waveform of compressor current is distorted.	•Reconnect connector of compressor. •Refer to 10-5.Ⓐ "How to check inverter/compressor".
12		10-time blink 2.5 seconds OFF	Outdoor fan motor	Outdoor fan has stopped 3 times in a row within 30 seconds after outdoor fan start-up.	•Refer to 10-5.Ⓘ "Check of outdoor fan motor. •Refer to 10-5.Ⓛ "Check of inverter P.C. board.
13		12-time blink 2.5 seconds OFF	Each phase current of compressor	Each phase current of compressor cannot be detected normally.	•Refer to 10-5.Ⓐ "How to check inverter/compressor".
14		13-time blink 2.5 seconds OFF	DC voltage	DC voltage of inverter cannot be detected normally.	•Refer to 10-5.Ⓐ "How to check inverter/compressor".
15	Outdoor unit operates.	1-time blink 2.5 seconds OFF	Frequency drop by current protection	Current from power outlet is nearing Max. fuse size.	The unit is normal, but check the following. •Check if indoor filters are clogged. •Check if refrigerant is short. •Check if indoor/outdoor unit air circulation is short cycled.
16		3-time blink 2.5 seconds OFF	Frequency drop by high pressure protection	Temperature of indoor coil thermistor exceeds 131°F (55°C) in HEAT mode, compressor frequency lowers.	
			Frequency drop by defrosting in COOL mode	Indoor coil thermistor reads 46°F (8°C) or less in COOL mode, compressor frequency lowers.	
17		4-time blink 2.5 seconds OFF	Frequency drop by discharge temperature protection	Temperature of discharge temperature thermistor exceeds 232°F (111°C), compressor frequency lowers.	•Check refrigerant circuit and refrigerant amount. •Refer to 10-5.Ⓚ "Check of LEV". •Refer to 10-5.Ⓖ "Check of outdoor thermistors".

NOTE: 1. The location of LED is illustrated at the right figure. Refer to 10-6.1.
2. LED is lit during normal operation.

The blinking frequency shows the number of times the LED blinks after every 2.5-second OFF.
(Example) When the blinking frequency is “2”.

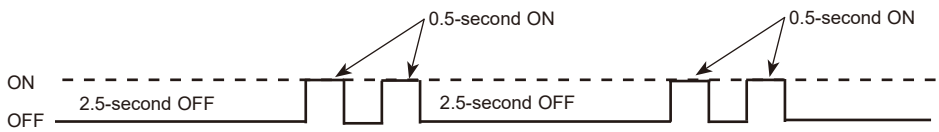

Inverter P.C. board (Parts side)

MUZ-FE09/12NA
MUZ-FE12NA1
MUZ-FE09/12NAH

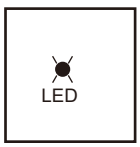

MUZ-FE18NA

No.	Symptom	LED indication	Abnormal point/ Condition	Condition	Remedy
18	Outdoor unit operates.	7-time blink 2.5 seconds OFF	Low discharge temperature protection	Temperature of discharge temperature thermistor has been 122°F (50°C) or less for 20 minutes.	•Refer to 10-5.Ⓚ "Check of LEV". •Check refrigerant circuit and refrigerant amount.
19		8-time blink 2.5 seconds OFF	**MUZ-FE09/12NA** **MUZ-FE12NA1** **MUZ-FE09/12NAH** PAM protection PAM: Pulse Amplitude Modulation	The overcurrent flows into IGBT (Insulated Gate Bipolar transistor: TR821) or the bus-bar voltage reaches 320 V or more, PAM stops and restarts.	This is not malfunction. PAM protection will be activated in the following cases: 1 Instantaneous power voltage drop (Short time power failure) 2 When the power supply voltage is high.
			MUZ-FE18NA Zero cross detecting circuit	Zero cross signal for PAM control cannot be detected.	
20		9-time blink 2.5 seconds OFF	Inverter check mode	The connector of compressor is disconnected, inverter check mode starts.	•Check if the connector of the compressor is correctly connected. Refer to 10-5.Ⓐ "How to check inverter/compressor".

10-4. TROUBLESHOOTING CRITERION OF MAIN PARTS

MUZ-FE09NA MUZ-FE09NAH MUZ-FE12NA MUZ-FE12NA1 MUZ-FE12NAH MUZ-FE18NA

Part name	Check method and criterion	Figure
Defrost thermistor (RT61) Ambient temperature thermistor (RT65) Outdoor heat exchanger temperature thermistor (RT68)	Measure the resistance with a tester. Refer to 10-6. “Test point diagram and voltage”, 1. “Inverter P.C. board”, for the chart of thermistor.	
Discharge temperature thermistor (RT62) Fin temperature thermistor (RT64)	Measure the resistance with a tester. Before measurement, hold the thermistor with your hands to warm it up. Refer to 10-6. “Test point diagram and voltage”, 1. “Inverter P.C. board”, for the chart of thermistor.	
Compressor	Measure the resistance between terminals using a tester. (Winding temperature: -4 ~ 104°F (-20 ~ 40°C)) Normal U-V, U-W, V-W: **MUZ-FE09/12NA** 1.52 ~ 2.17 Ω; **MUZ-FE09NA - 1**, **MUZ-FE12NA1**, **MUZ-FE09/12NAH** 0.78 ~ 1.11 Ω; **MUZ-FE18NA** 0.83 ~ 1.18 Ω	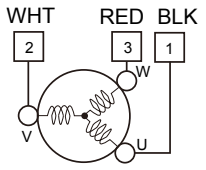
Outdoor fan motor	Measure the resistance between lead wires using a tester. (Part temperature: -4 ~ 104°F (-20 ~ 40°C)) Color of lead wire: RED – BLK, BLK – WHT, WHT – RED Normal: 11 ~ 16 Ω	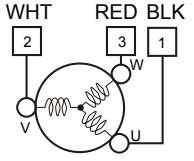

Part name	Check method and criterion	Figure
R. V. coil (21S4)	Measure the resistance using a tester. (Part temperature: 14 ~ 104°F (-10 ~ 40°C)) Normal: 0.97 ~ 1.38 kΩ	
Expansion valve coil (LEV)	Measure the resistance using a tester. (Part temperature: 14 ~ 104°F (-10 ~ 40°C)) **MUZ-FE09/12NA MUZ-FE09/12NAH MUZ-FE12NA1** Color of lead wire: WHT – RED, RED – ORN, YLW – BRN, BRN – BLU Normal: 37 ~ 54 Ω	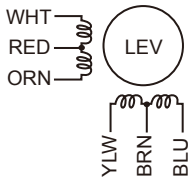
	Measure the resistance using a tester. (Part temperature: 14 ~ 104°F (-10 ~ 40°C)) **MUZ-FE18NA** Color of lead wire: RED – ORN, RED – WHT, RED – BLU, RED – YLW Normal: 37 ~ 54 Ω	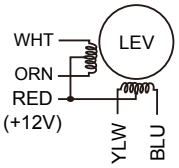
Defrost heater **MUZ-FE•NAH**	Measure the resistance using a tester. (Part temperature: 14 ~ 104°F (-10 ~ 40°C)) Normal (Ω): 349 ~ 428	

10-5. TROUBLESHOOTING FLOW

Ⓐ How to check inverter/compressor

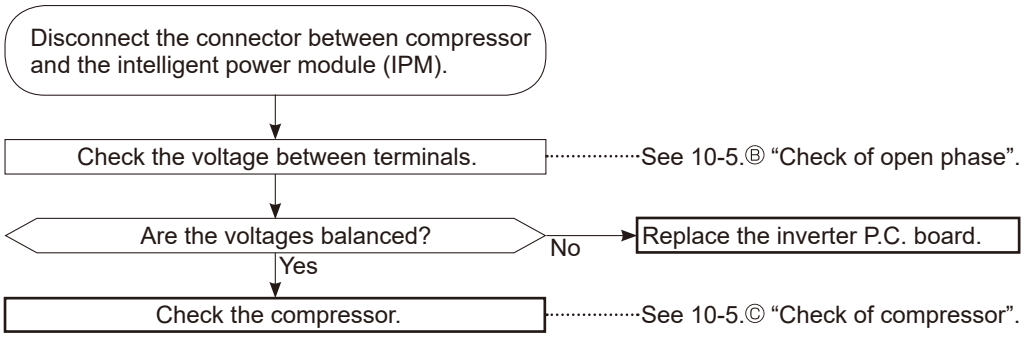

Ⓑ Check of open phase

- With the connector between the compressor and the intelligent power module disconnected, activate the inverter and check if the inverter is normal by measuring **the voltage balance** between the terminals.

  Output voltage is 50 - 130 V. (The voltage may differ according to the tester.)

<< Operation method>>
Start cooling or heating operation by pressing EMERGENCY OPERATION switch on the indoor unit. (TEST RUN OPERATION: Refer to 7-6.)
<<Measurement point>>
at 3 points
BLK (U) - WHT (V)
BLK (U) - RED (W)
WHT(V) - RED (W)

*Measure AC voltage between the lead wires at 3 points.

NOTE: 1. Output voltage varies according to power supply voltage.
2. Measure the voltage by analog type tester.
3. During this check, LED of the inverter P.C. board blinks 9 times. (Refer to 10-6.1.)

Ⓒ Check of compressor

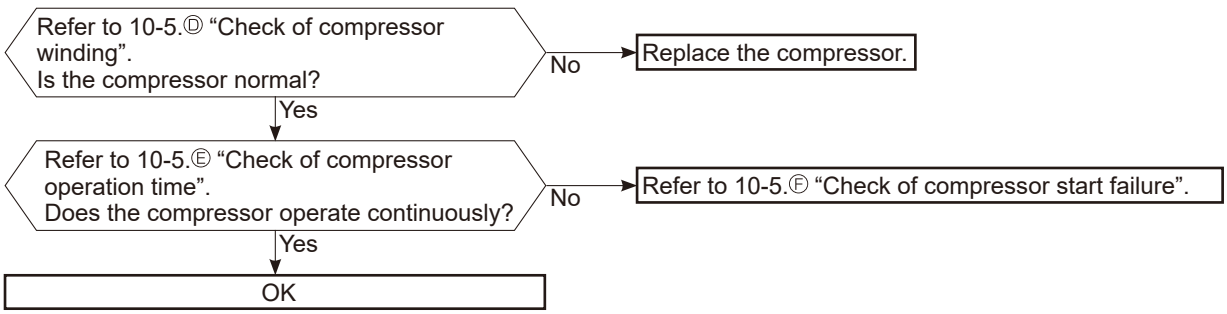

Ⓓ Check of compressor winding

- Disconnect the connector between the compressor and intelligent power module, and measure the resistance between the compressor terminals.

<<Measurement point>>
At 3 points
BLK - WHT
BLK - RED
WHT - RED
*Measure the resistance between the lead wires at 3 points.

<<Judgement>>
Refer to 10-4.
0[Ω]····· Abnormal [short]
Infinite [Ω]····· Abnormal [open]
NOTE: Be sure to zero the ohmmeter before measurement.

Ⓔ Check of compressor operation time

- Connect the compressor and activate the inverter. Then measure the time until the inverter stops due to over current.

<<Operation method>>
Start heating or cooling operation by pressing EMERGENCY OPERATION switch on the indoor unit.
(TEST RUN OPERATION: Refer to 7-6.)

<<Measurement>>
Measure the time from the start of compressor to the stop of compressor due to overcurrent.

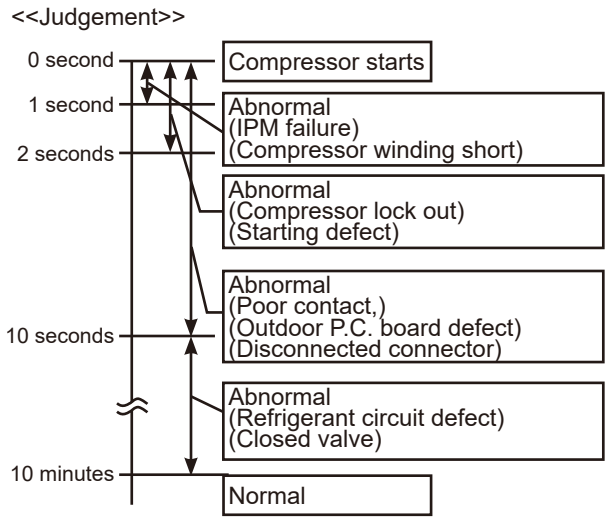

Ⓕ Check of compressor start failure

Confirm that 1~4 is normal.
- Electrical circuit check

1. Contact of the compressor connector
2. Output voltage of inverter P.C. board and balance of them (See 10-5.Ⓑ)
3. Direct current voltage between DB61(+) and (-) (**MUZ-FE09/12NA, MUZ-FE12NA1, MUZ-FE09/12NAH**)/JP715(+) and JP30(-) (**MUZ-FE18NA**) on the inverter P.C. board
4. Voltage between outdoor terminal block S1-S2

↓

Does the compressor run for 10 seconds or more after it starts?
- Yes → Check the refrigerant circuit. Check the stop valve.
- No ↓

After the compressor is heated with a drier, does the compressor start? *1
- No → Replace the compressor.
- Yes ↓

Compressor start failure. Activate pre-heat control. (Refer to 9-2. "PRE-HEAT CONTROL SETTING")

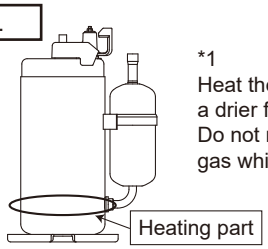

*1
Heat the compressor with a drier for about 20 minutes. Do not recover refrigerant gas while heating.

Ⓖ Check of outdoor thermistors

Disconnect the connector of thermistor in the outdoor P.C. board (see below table), and measure the resistance of thermistor.

↓

Is the thermistor normal? (Refer to 10-6.1.)

- No → Replace the thermistor except RT64. When RT64 is abnormal, replace the inverter P.C. board.
- Yes ↓

Reconnect the connector of thermistor.
Turn ON the power supply and press EMERGENCY OPERATION switch.

↓

Does the unit operate for 10 minutes or more without showing thermistor abnormality?

- No → Replace the inverter P.C. board.
- Yes ↓

OK (Cause is poor contact.)

MUZ-FE09NA MUZ-FE09NAH MUZ-FE12NA MUZ-FE12NA1 MUZ-FE12NAH

Thermistor	Symbol	Connector, Pin No.	Board
Defrost	RT61	Between CN641 pin1 and pin2	Inverter P.C. board
Discharge temperature	RT62	Between CN641 pin3 and pin4	
Fin temperature	RT64	Between CN642 pin1 and pin2	
Ambient temperature	RT65	Between CN643 pin1 and pin2	
Outdoor heat exchanger temperature	RT68	Between CN644 pin1 and pin3	

MUZ-FE18NA

Thermistor	Symbol	Connector, Pin No.	Board
Defrost	RT61	Between CN671 pin1 and pin2	Inverter P.C. board
Discharge temperature	RT62	Between CN671 pin3 and pin4	
Fin temperature	RT64	Between CN673 pin1 and pin2	
Ambient temperature	RT65	Between CN672 pin1 and pin2	
Outdoor heat exchanger temperature	RT68	Between CN671 pin5 and pin6	

Ⓗ Check of R.V. coil

*First of all, measure the resistance of R.V. coil to check if the coil is defective. Refer to 10-4.
*In case CN721 (**MUZ-FE09/12NA, MUZ-FE12NA1, MUZ-FE09/12NAH**)/CN602 (**MUZ-FE18NA**) is disconnected or R.V. coil is open, voltage is generated between the terminal pins of the connector although no signal is being transmitted to R.V. coil. Check if CN721 (**MUZ-FE09/12NA, MUZ-FE12NA1, MUZ-FE09/12NAH**)/CN602 (**MUZ-FE18NA**) is connected.

Unit operates in COOL mode even if it is set to HEAT mode.

Disconnect connector between the compressor and the intelligent power module.
Turn ON the power supply and press EMERGENCY OPERATION switch twice (HEAT mode).

→ Is there 208/230 V AC between CN721 (**MUZ-FE09/12NA, MUZ-FE12NA1, MUZ-FE09/12NAH**)/CN602 (**MUZ-FE18NA**)① and ② on the inverter P.C. board 3 minutes after the power supply is turned ON?

- No → Replace the inverter P.C. board.
- Yes ↓ Replace the 4-way valve.

Unit operates in HEAT mode even if it is set to COOL mode.

Disconnect connector between the compressor and the intelligent power module.
Turn ON the power supply and press EMERGENCY OPERATION switch once (COOL mode).

→ Is there 208/230 V AC between CN721 (**MUZ-FE09/12NA, MUZ-FE12NA1, MUZ-FE09/12NAH**)/CN602 (**MUZ-FE18NA**) ① and ② on the inverter P.C. board 3 minutes after the power supply is turned ON?

- Yes → Replace the inverter P.C. board.
- No ↓ Replace the 4-way valve.

Ⓘ Check of outdoor fan motor

MUZ-FE09NA MUZ-FE09NAH MUZ-FE12NA MUZ-FE12NA1 MUZ-FE12NAH

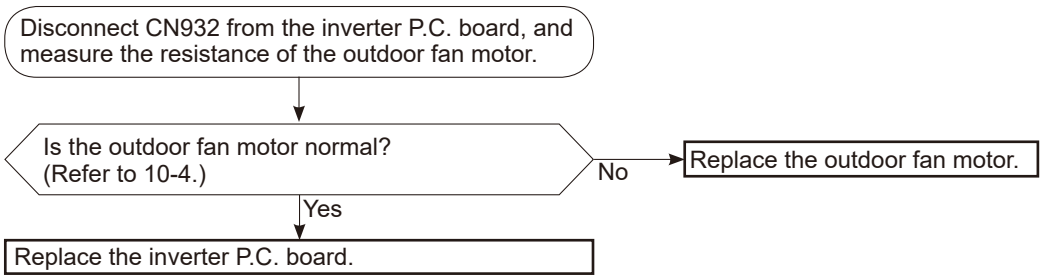

MUZ-FE18NA

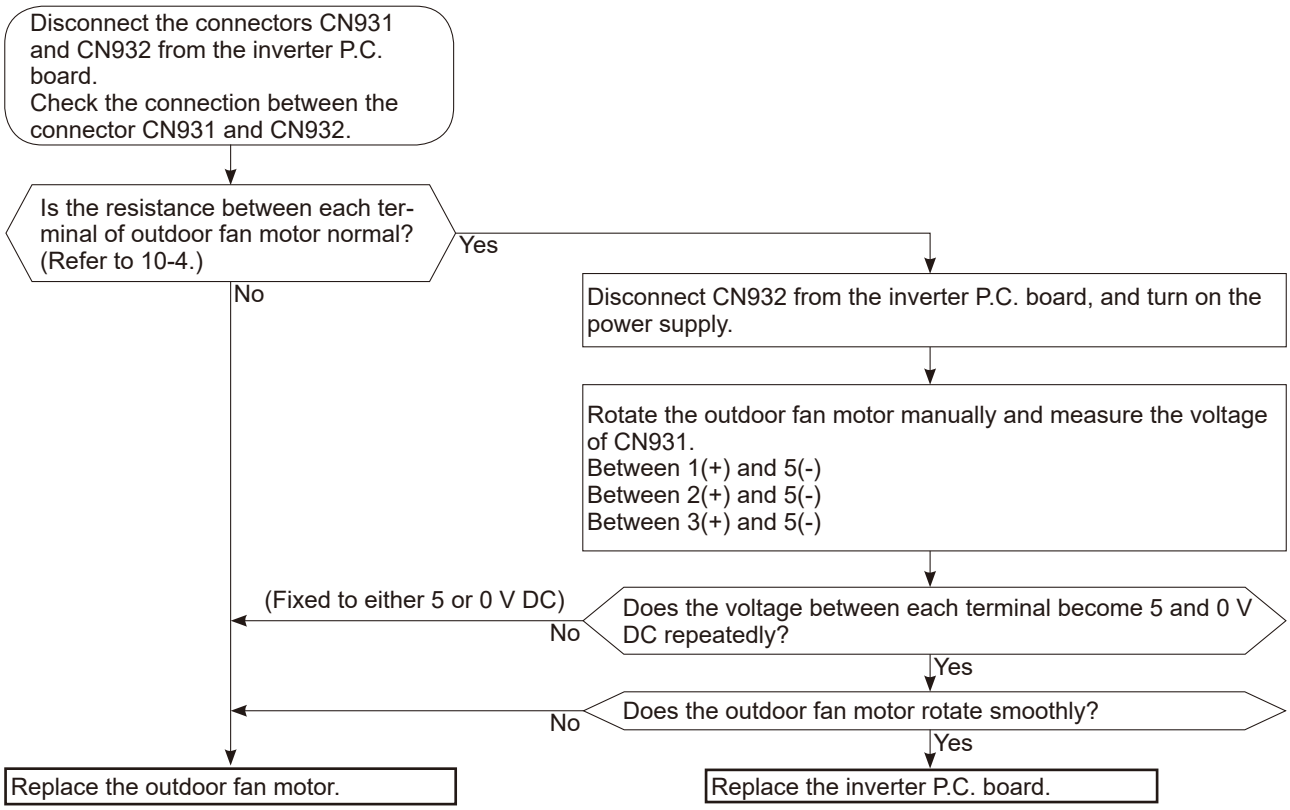

Ⓙ Check of power supply

MUZ-FE09NA MUZ-FE09NAH MUZ-FE12NA MUZ-FE12NA1 MUZ-FE12NAH

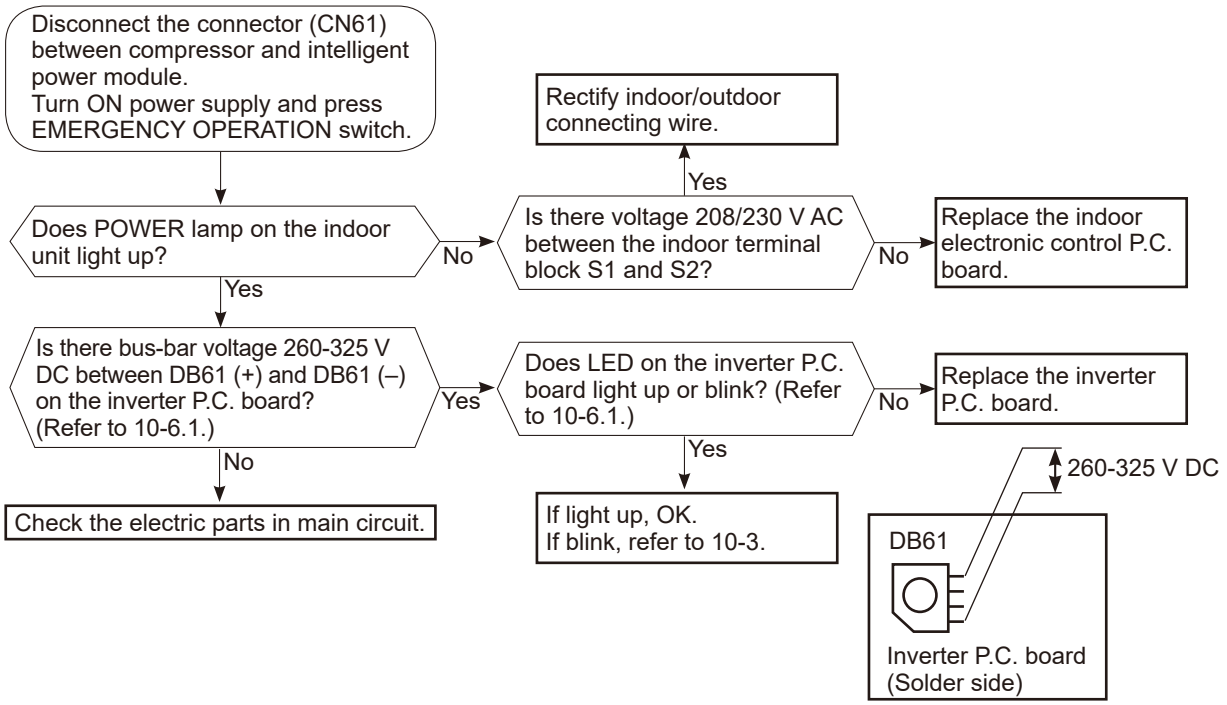

MUZ-FE18NA

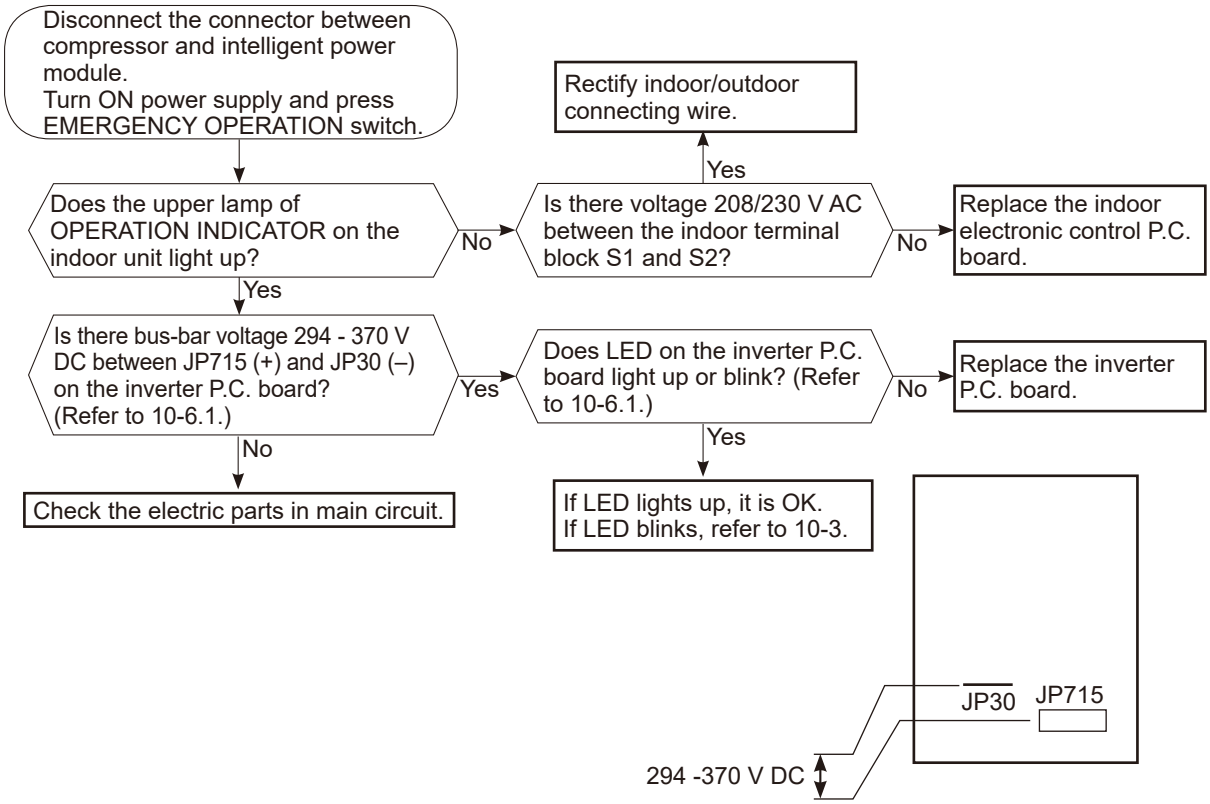
Disconnect the connector between compressor and intelligent power module.
Turn ON power supply and press EMERGENCY OPERATION switch.
Does the upper lamp of OPERATION INDICATOR on the indoor unit light up?
No
Is there voltage 208/230 V AC between the indoor terminal block S1 and S2?
Yes
Rectify indoor/outdoor connecting wire.
No
Replace the indoor electronic control P.C. board.
Yes
Is there bus-bar voltage 294 - 370 V DC between JP715 (+) and JP30 (–) on the inverter P.C. board? (Refer to 10-6.1.)
Yes
Does LED on the inverter P.C. board light up or blink? (Refer to 10-6.1.)
No
Replace the inverter P.C. board.
No
Check the electric parts in main circuit.
Yes
If LED lights up, it is OK.
If LED blinks, refer to 10-3.
JP30
JP715
294 -370 V DC

Ⓚ Check of LEV (Expansion valve)

Turn ON the power supply.
<Preparation of the remote controller>
① While pressing both OPERATION SELECT button and TOO COOL button on the remote controller at the same time, press RESET button.
② First, release RESET button.
Hold down the other two buttons for another 3 seconds. Make sure that the indicators on the LCD screen shown in the right figure are all displayed. Then release the buttons.

↓

Press OPERATE/STOP (ON/OFF) button of the remote controller (the set temperature is displayed) with the remote controller headed towards the indoor unit. *1

↓

Expansion valve operates in full-opening direction.

↓

Do you hear the expansion valve "click, click·····"?
Do you feel the expansion valve vibrate on touching it ?

- Yes → OK
- No ↓

Is LEV coil properly fixed to the expansion valve?

- No → Properly fix the LEV coil to the expansion valve.
- Yes ↓

Does the resistance of LEV coil have the characteristics? (Refer to 10-4.)

- No → Replace the LEV coil.
- Yes →

Measure each voltage between connector pins of CN724 on the inverter P.C. board.
1. Pin③(-) — Pin①(+)
2. Pin④(-) — Pin①(+)
3. Pin⑤(-) — Pin①(+)
4. Pin⑥(-) — Pin①(+)

Is there about 3 ~ 5 V AC between each?
NOTE: Measure the voltage by an analog tester.

- No → Replace the inverter P.C. board.
- Yes → Replace the expansion valve.

MSZ-FE09NA
MSZ-FE12NA

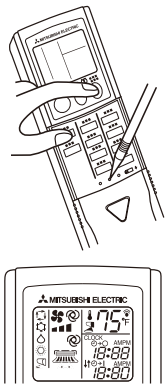

MSZ-FE18NA

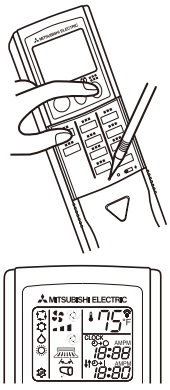

*1. Regardless of normal or abnormal condition, a short beep is emitted once the signal is received.

NOTE: After check of LEV, take the following steps.
1. Turn OFF the power supply and turn ON it again.
2. Press RESET button on the remote controller.

Ⓛ Check of inverter P.C. board

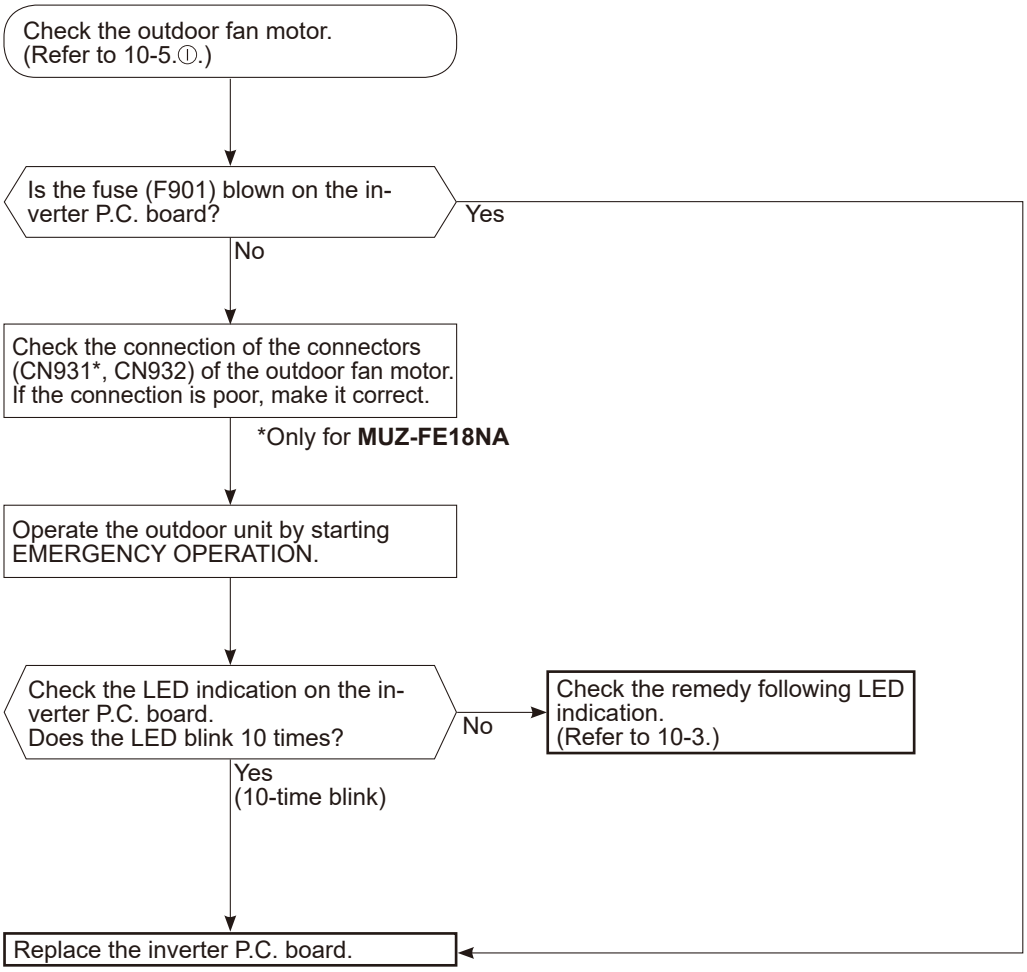

Ⓜ How to check miswiring and serial signal error

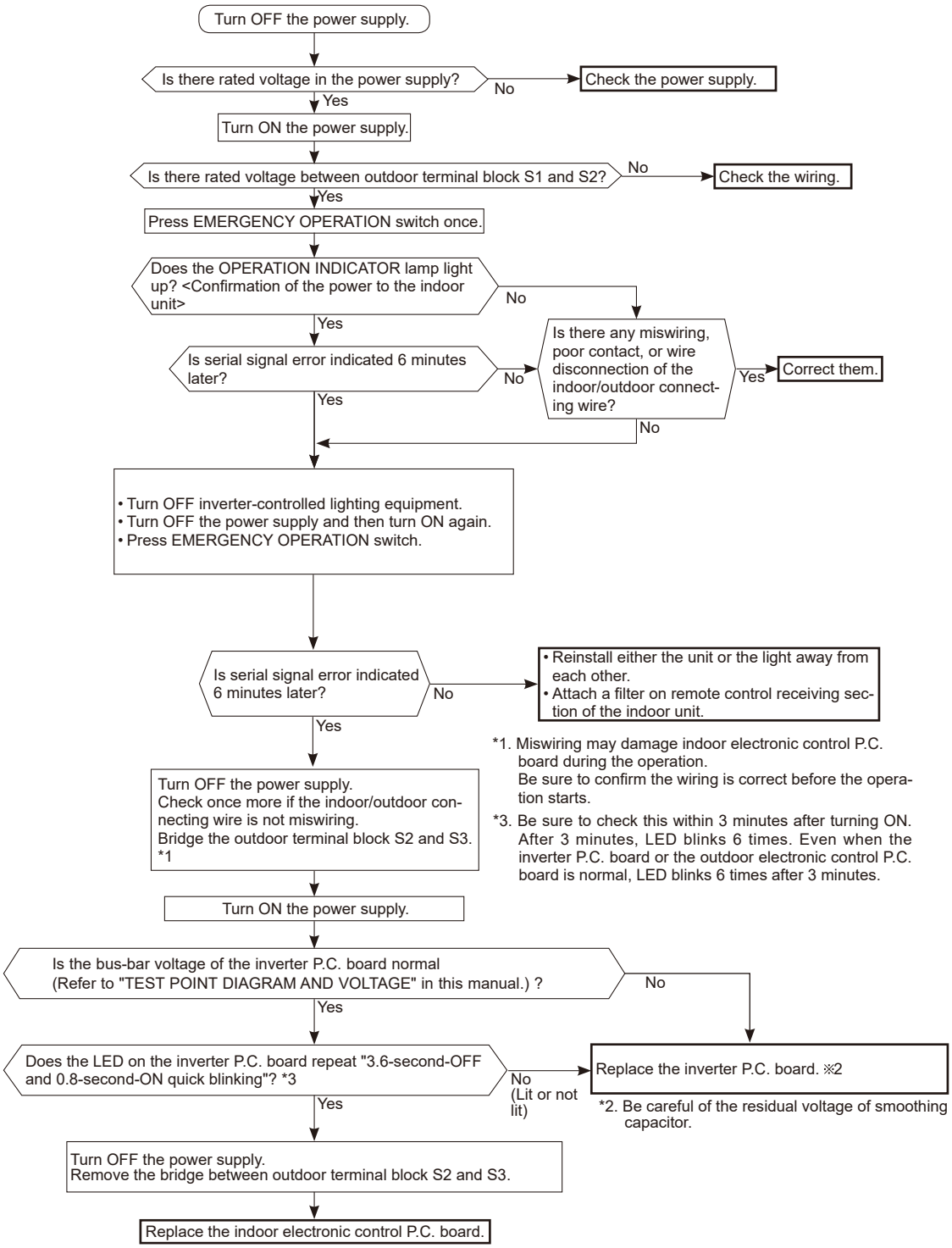

*1. Miswiring may damage indoor electronic control P.C. board during the operation.
Be sure to confirm the wiring is correct before the operation starts.

*3. Be sure to check this within 3 minutes after turning ON. After 3 minutes, LED blinks 6 times. Even when the inverter P.C. board or the outdoor electronic control P.C. board is normal, LED blinks 6 times after 3 minutes.

*2. Be careful of the residual voltage of smoothing capacitor.

Ⓝ Electromagnetic noise enters into TV sets or radios

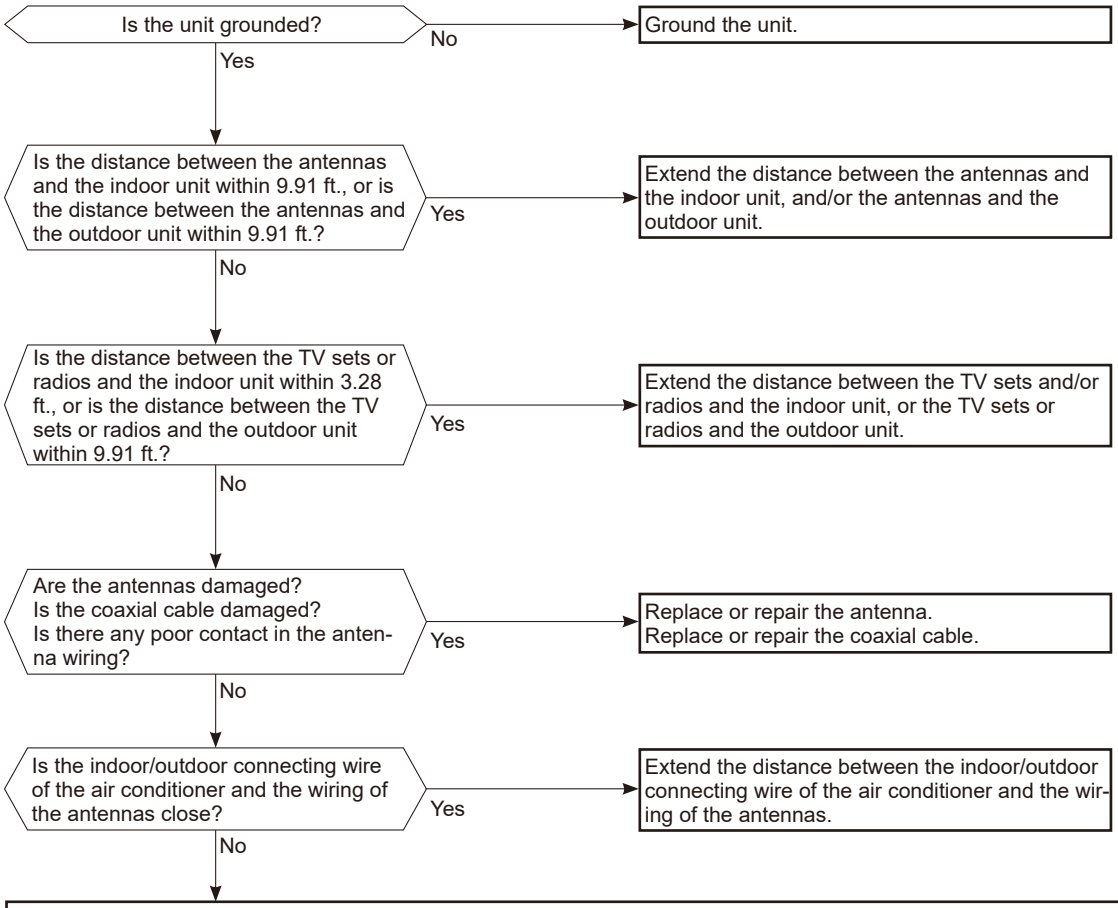

Even if all of the above conditions are fulfilled, the electromagnetic noise may enter, depending on the electric field strength or the installation condition (combination of specific conditions such as antennas or wiring).
Check the followings before asking for service.

1. Devices affected by the electromagnetic noise
   TV sets, radios (FM/AM broadcast, shortwave)
2. Channel, frequency, broadcast station affected by the electromagnetic noise
3. Channel, frequency, broadcast station unaffected by the electromagnetic noise
4. Layout of:
   indoor/outdoor unit of the air conditioner, indoor/outdoor wiring, grounding wire, antennas, wiring from antennas, receiver
5. Electric field intensity of the broadcast station affected by the electromagnetic noise
6. Presence or absence of amplifier such as booster
7. Operation condition of air conditioner when the electromagnetic noise enters in
   1) Turn OFF the power supply once, and then turn ON the power supply. In this situation, check for the electromagnetic noise.
   2) Within 3 minutes after turning ON the power supply, press OPERATE/STOP (ON/OFF) button on the remote controller for power ON, and check for the electromagnetic noise.
   3) After a short time (3 minutes later after turning ON), the outdoor unit starts running. During operation, check for the electromagnetic noise.
   4) Press OPERATE/STOP (ON/OFF) button on the remote controller for power OFF, when the outdoor unit stops but the indoor/outdoor communication still runs on. In this situation, check for the electromagnetic noise.

10-6. TEST POINT DIAGRAM AND VOLTAGE

1. Inverter P.C. board

MUZ-FE09NA MUZ-FE09NAH MUZ-FE12NA MUZ-FE12NA1 MUZ-FE12NAH

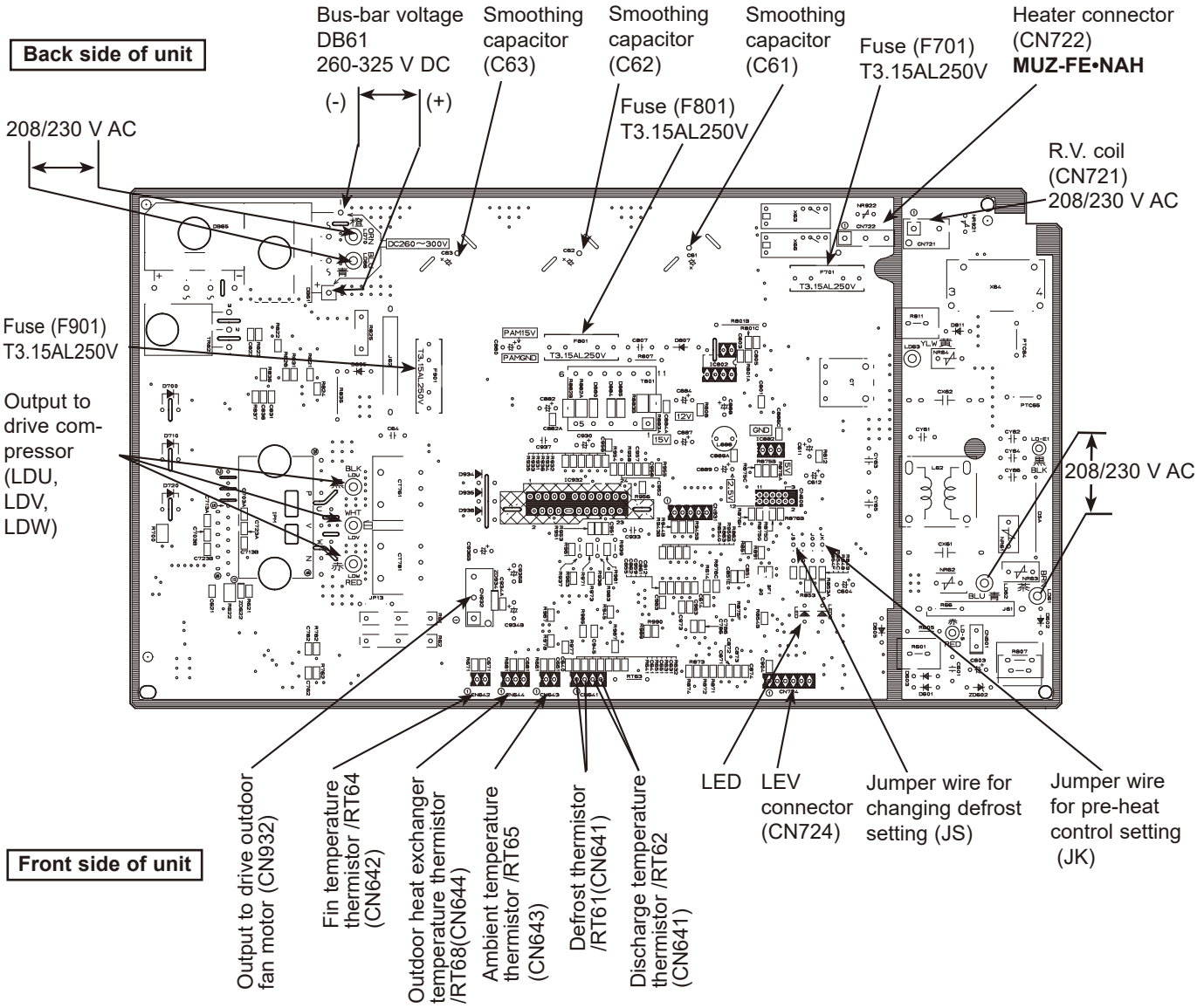

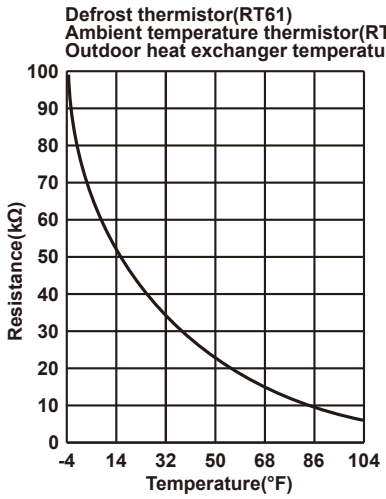

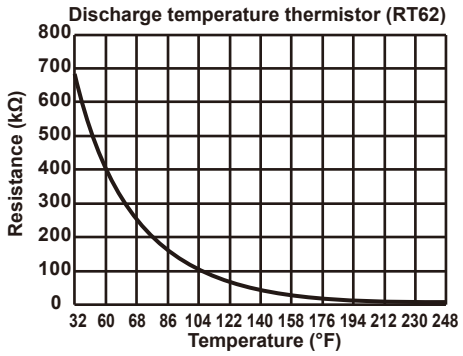

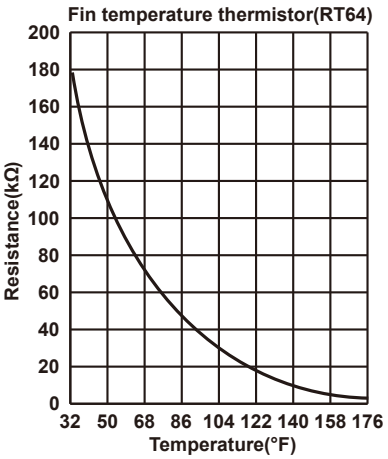

MUZ-FE18NA

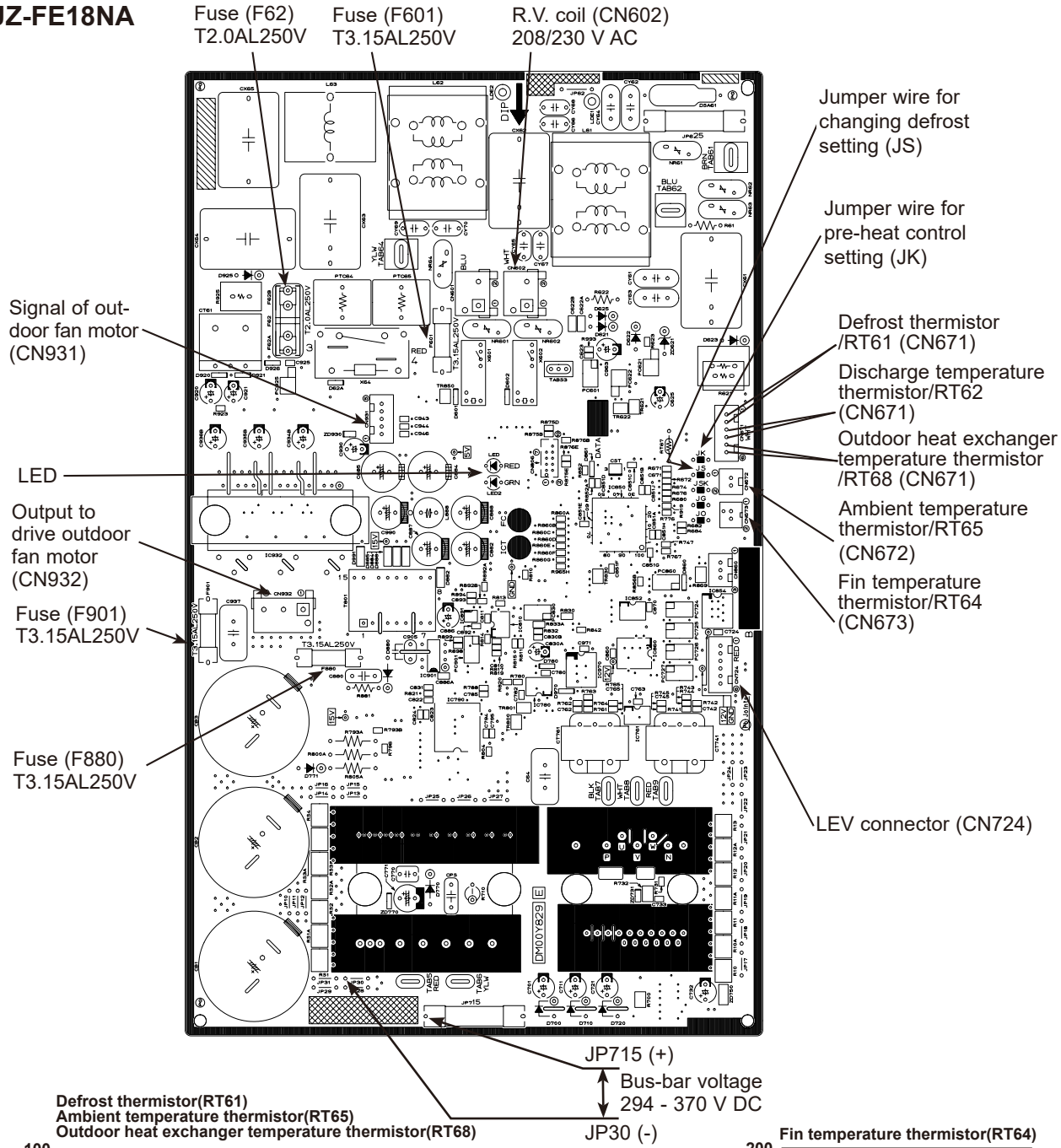
Fuse (F62)
T2.0AL250V
Fuse (F601)
T3.15AL250V
R.V. coil (CN602)
208/230 V AC
Jumper wire for changing defrost setting (JS)
Jumper wire for pre-heat control setting (JK)
Signal of outdoor fan motor (CN931)
Defrost thermistor /RT61 (CN671)
Discharge temperature thermistor/RT62 (CN671)
Outdoor heat exchanger temperature thermistor /RT68 (CN671)
Ambient temperature thermistor/RT65 (CN672)
Fin temperature thermistor/RT64 (CN673)
LED
Output to drive outdoor fan motor (CN932)
Fuse (F901)
T3.15AL250V
Fuse (F880)
T3.15AL250V
LEV connector (CN724)
JP715 (+)
Bus-bar voltage
294 - 370 V DC
JP30 (-)

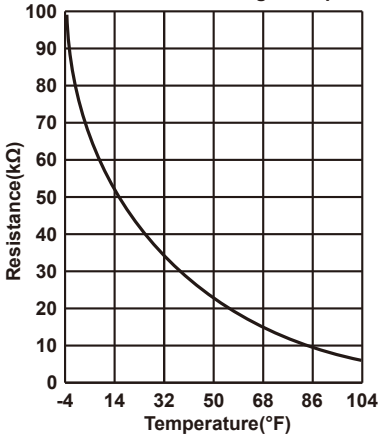
Defrost thermistor(RT61)
Ambient temperature thermistor(RT65)
Outdoor heat exchanger temperature thermistor(RT68)
Resistance(kΩ)
100
90
80
70
60
50
40
30
20
10
0
-4
14
32
50
68
86
104
Temperature(°F)

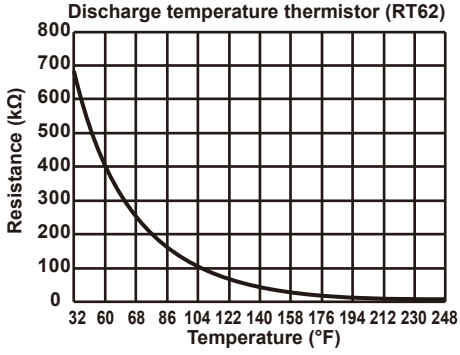
Discharge temperature thermistor (RT62)
Resistance (kΩ)
800
700
600
500
400
300
200
100
0
32
60
68
86
104
122
140
158
176
194
212
230
248
Temperature (°F)

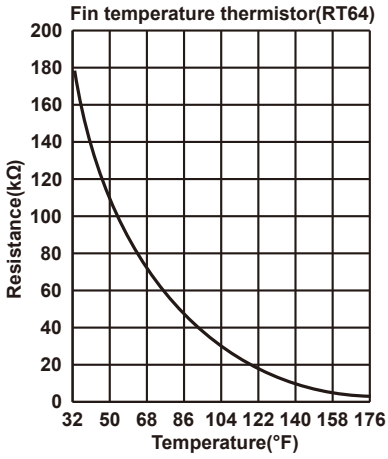
Fin temperature thermistor(RT64)
Resistance(kΩ)
200
180
160
140
120
100
80
60
40
20
0
32
50
68
86
104
122
140
158
176
Temperature(°F)

11 DISASSEMBLY INSTRUCTIONS

<Detaching method of the terminal with locking mechanism>

The terminal which has the locking mechanism can be detached as shown below.
There are 2 types of the terminal with locking mechanism.
The terminal without locking mechanism can be detached by pulling it out.
Check the shape of the terminal before detaching.

(1) Slide the sleeve and check if there is a locking lever or not.

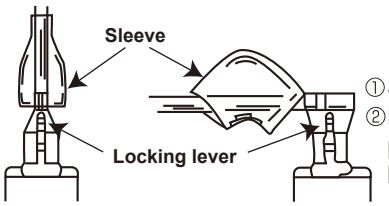

①Slide the sleeve.
②Pull the terminal while pushing the locking lever.

(2) The terminal with the connector shown below has the locking mechanism.

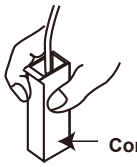

①Hold the sleeve, and pull out the terminal slowly.

11-1. MUZ-FE09NA MUZ-FE09NAH MUZ-FE12NA MUZ-FE12NA1 MUZ-FE12NAH

NOTE: Turn OFF power supply before disassembly.

→ : Indicates the visible parts in the photos/figures.
- - → : Indicates the invisible parts in the photos/figures.

OPERATING PROCEDURE	PHOTOS/FIGURES
1. Removing the cabinet (1) Remove the screw fixing the service panel. (2) Pull down the service panel and remove it. (3) Remove the screws fixing the conduit cover. (4) Remove the conduit cover. (5) Disconnect the power supply wire and indoor/outdoor connecting wire. (6) Remove the screws fixing the top panel. (7) Remove the top panel. (8) Remove the screws fixing the cabinet. (9) Remove the cabinet. (10) Remove the screws fixing the back panel. (11) Remove the back panel.	**Photo 1** 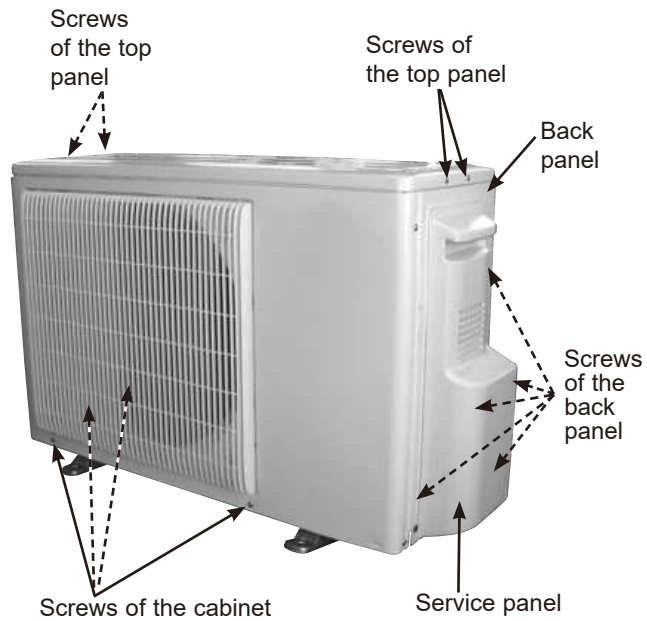
Photo 2 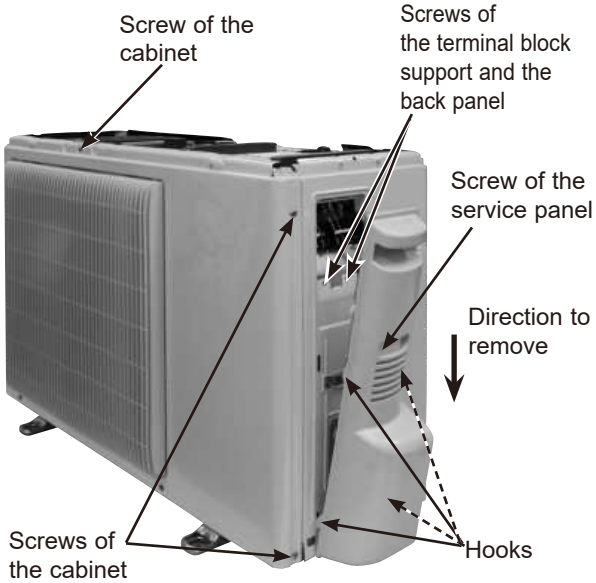 	**Photo 3** 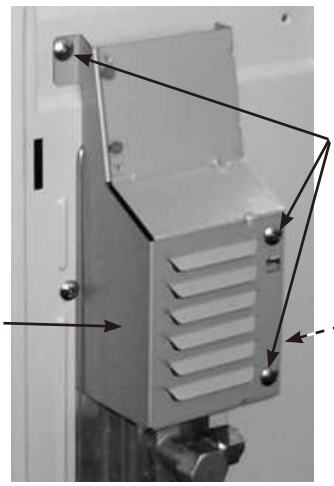

OPERATING PROCEDURE	PHOTOS/FIGURES

2. Removing the inverter assembly, inverter P.C. board

(1) Remove the cabinet and panels. (Refer to section 1.)
(2) Disconnect the lead wire to the reactor and the following connectors:
<Inverter P.C. board>
CN641 (Defrost thermistor and discharge temperature thermistor)
CN643 (Ambient temperature thermistor)
CN644 (Outdoor heat exchanger temperature thermistor)
CN721 (R.V.coil)
CN724 (LEV)
CN932 (Fan motor)
(3) Remove the compressor connector (CN61).
(4) Remove the screws fixing the heat sink support and the separator.
(5) Remove the fixing screws of the terminal block support and the back panel.
(6) Remove the inverter assembly.
(7) Remove the screw of the ground wire and screw of the terminal block support.
(8) Remove the heat sink support from the P.C. board support.
(9) Remove the screw of the inverter P.C. board and remove the inverter P.C. board from the P.C. board support.

Photo 4

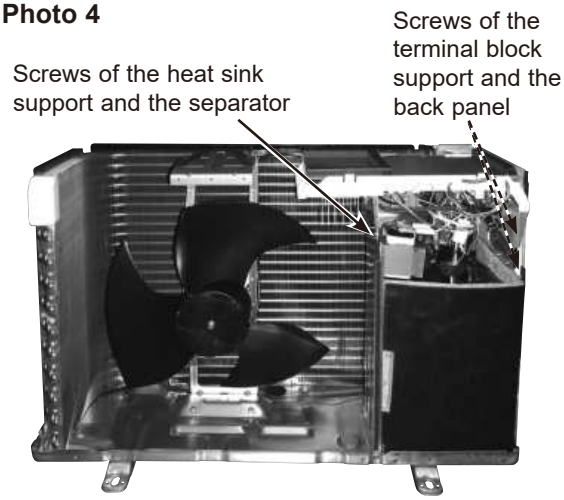

Photo 5 (Inverter assembly)

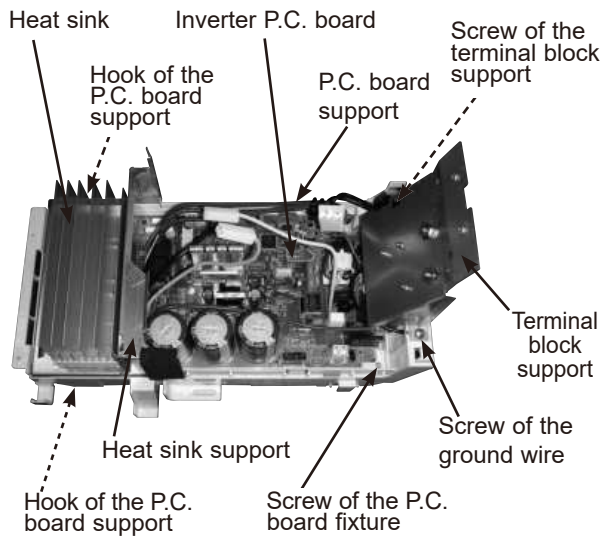

3. Removing R.V. coil

(1) Remove the cabinet and panels. (Refer to section 1.)
(2) Disconnect the following connectors:
<Inverter P.C. board>
CN721 (R.V. coil)
(3) Remove the R.V. coil.

Photo 6

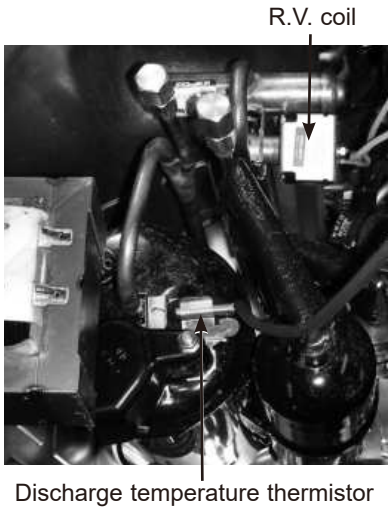

OPERATING PROCEDURE	PHOTOS/FIGURES
4. Removing the discharge temperature thermistor, defrost thermistor, outdoor heat exchanger temperature thermistor and ambient temperature thermistor. (1) Remove the cabinet and panels. (Refer to section 1.) (2) Disconnect the lead wire to the reactor and the following connectors: <Inverter P.C. board> CN641 (Defrost thermistor and discharge temperature thermistor) CN643 (Ambient temperature thermistor) CN644 (Outdoor heat exchanger temperature thermistor) (3) Pull out the discharge temperature thermistor from its holder. (Photo 6) (4) Pull out the defrost thermistor from its holder. (5) Pull out the outdoor heat exchanger temperature thermistor from its holder. (6) Pull out the ambient temperature thermistor from its holder.	**Photo 7** 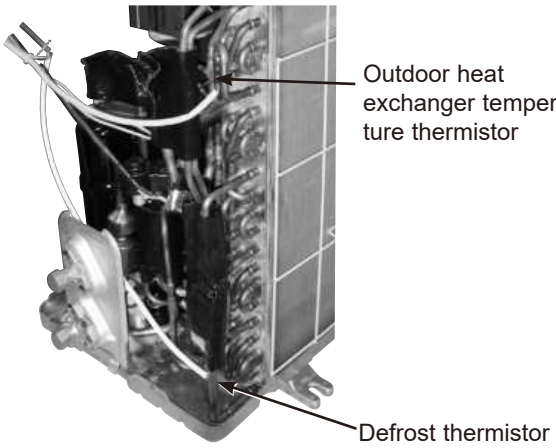
5. Removing outdoor fan motor (1) Remove the cabinet and panels. (Refer to section 1.) (2) Disconnect the connectors for outdoor fan motor. (3) Remove the propeller nut. (4) Remove the propeller. (5) Remove the screws fixing the fan motor. (6) Remove the fan motor.	**Photo 8** 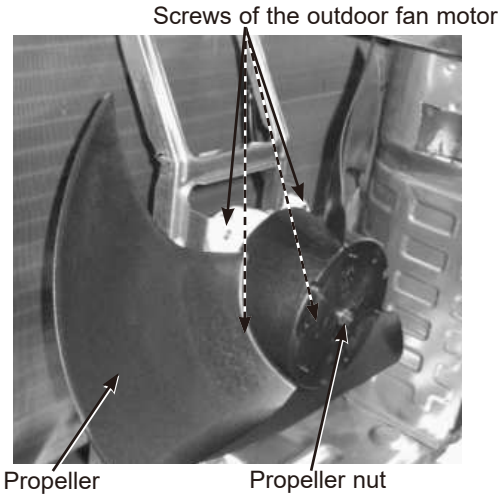
6. Removing the compressor and 4-way valve (1) Remove the cabinet and panels. (Refer to section 1.) (2) Remove the inverter assembly. (Refer to section 2.) (3) Recover gas from the refrigerant circuit. **NOTE:** Recover gas from the pipes until the pressure gauge shows 0 PSIG. (4) Detach the brazed part of the suction and the discharge pipes connected with compressor. (5) Remove the nuts of compressor legs. (6) Remove the compressor. (7) Detach the brazed part of pipes connected with 4-way valve.	**Photo 9** 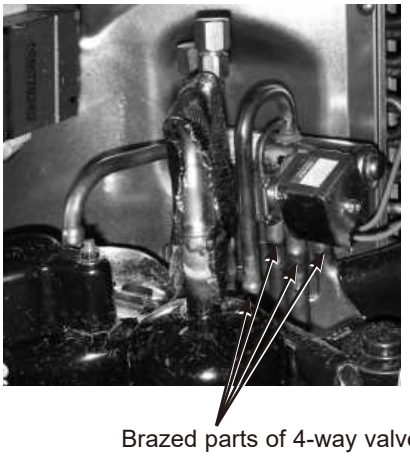

11-2. MUZ-FE18NA

NOTE: Turn OFF power supply before disassembly.

OPERATING PROCEDURE	PHOTOS/FIGURES

1. Removing the cabinet

(1) Remove the screws of the service panel.
(2) Remove the screws of the top panel.
(3) Remove the screw of the valve cover.
(4) Remove the service panel.
(5) Remove the screws fixing the conduit cover.
(6) Remove the conduit cover.
(7) Remove the top panel.
(8) Remove the valve cover.
(9) Disconnect the power supply and indoor/outdoor connecting wire.
(10) Remove the screws of the cabinet.
(11) Remove the cabinet.
(12) Remove the screws of the back panel.
(13) Remove the back panel.

Photo 2

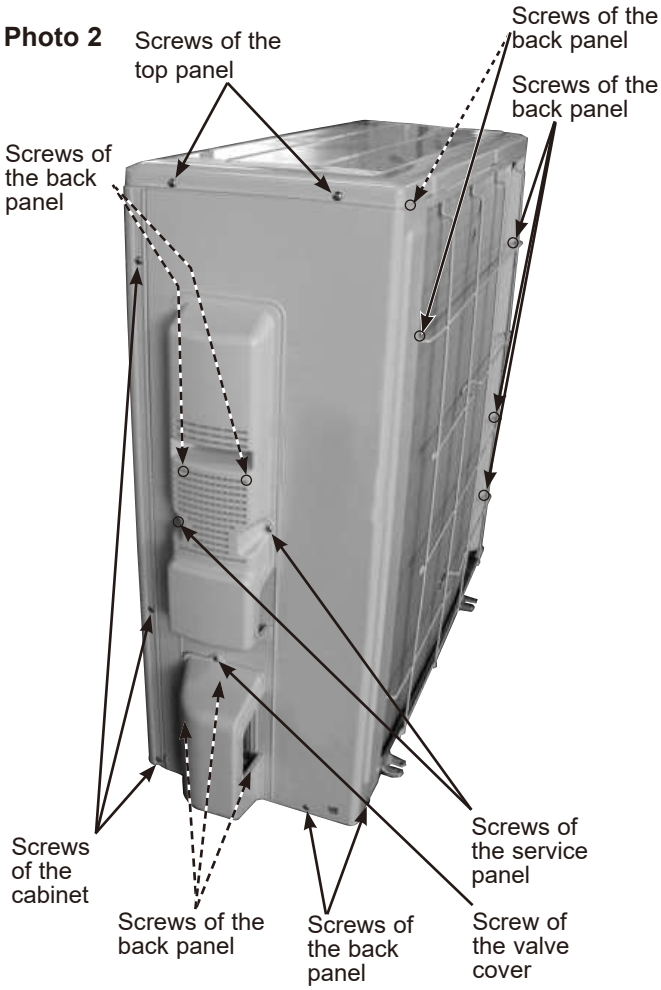

Photo 1

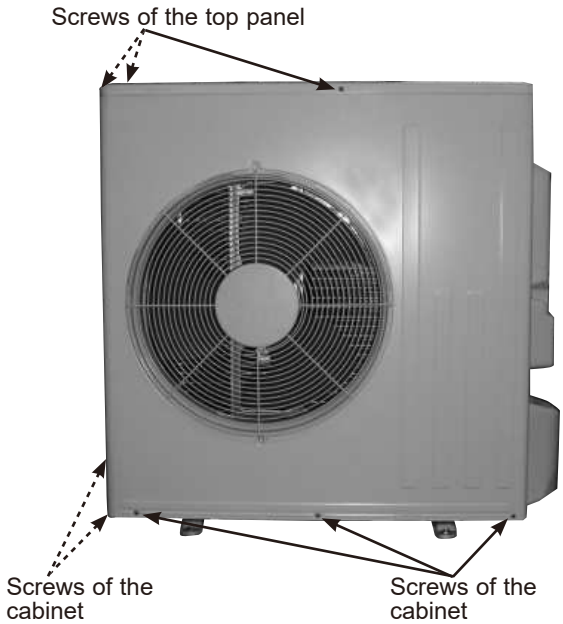

Photo 3

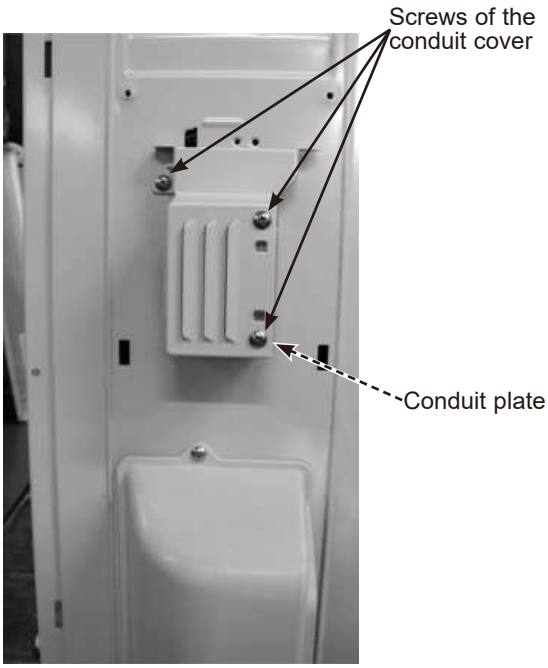

OPERATING PROCEDURE	PHOTOS/FIGURES
2. Removing the inverter assembly, inverter P.C. board (1) Remove the cabinet and panels. (Refer to section 1.) (2) Disconnect the lead wire to the reactor and the following connectors: <Inverter P.C. board> CN602 (R.V. coil) CN671 (Defrost thermistor, discharge temperature thermistor and outdoor heat exchanger temperature thermistor) CN672 (Ambient temperature thermistor) CN724 (LEV) CN931, CN932 (Fan motor) (3) Remove the compressor connector. (4) Remove the screws fixing the relay panel. (5) Remove the relay panel. (6) Remove the ground wires and the lead wires of the inverter P.C. board. (7) Remove the screws of the PB support. (8) Remove the inverter P.C. board from the relay panel.	**Photo 4** 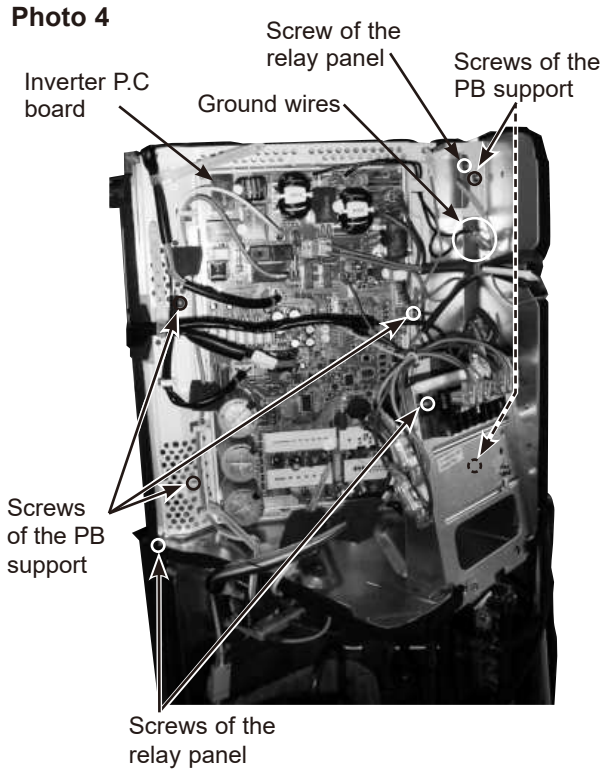
3. Removing R.V. coil (1) Remove the cabinet and panels. (Refer to section 1.) (2) Disconnect the following connector: <Inverter P.C. board> CN602 (R.V. coil) (3) Remove the R.V. coil.	**Photo 5** 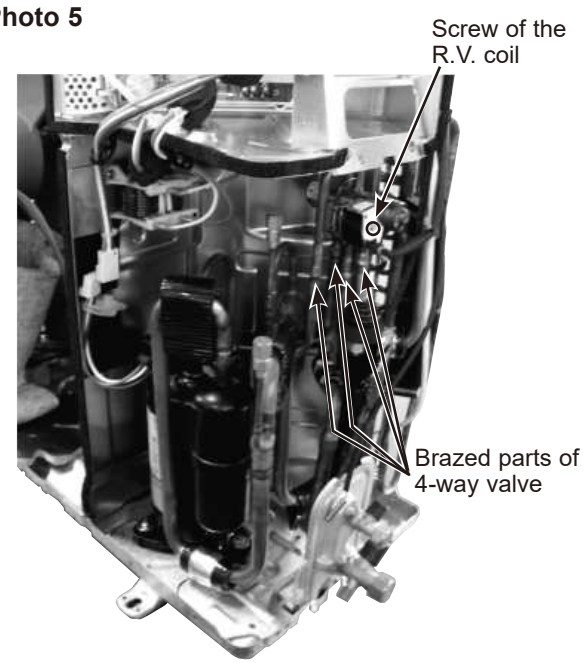

OPERATING PROCEDURE	PHOTOS/FIGURES

4. Removing the discharge temperature thermistor, defrost thermistor, outdoor heat exchanger temperature thermistor and ambient temperature thermistor

(1) Remove the cabinet and panels. (Refer to section 1.)
(2) Disconnect the lead wire to the reactor and the following connectors:
<Inverter P.C. board>
CN671 (Defrost thermistor, discharge temperature thermistor and outdoor heart exchanger temperature thermistor)
CN672 (Ambient temperature thermistor)
(3) Pull out the discharge temperature thermistor from its holder. (Photo 8)
(4) Pull out the defrost thermistor from its holder.
(5) Pull out the outdoor heat exchanger temperature thermistor from its holder.
(6) Pull out the ambient temperature thermistor from its holder.

Photo 6

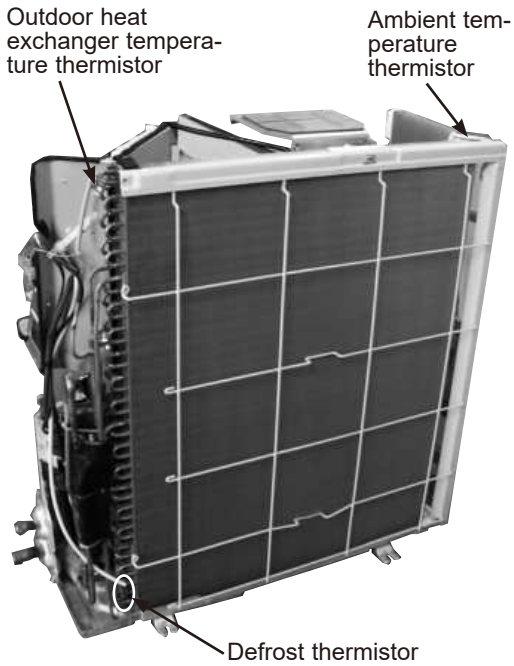

5. Removing outdoor fan motor

(1) Remove the top panel, cabinet and service panel. (Refer to section 1.)
(2) Disconnect the following connectors:
<Inverter P.C. board>
CN931 and CN932 (Fan motor)
(3) Remove the propeller.
(4) Remove the screws fixing the fan motor.
(5) Remove the fan motor.

Photo 7

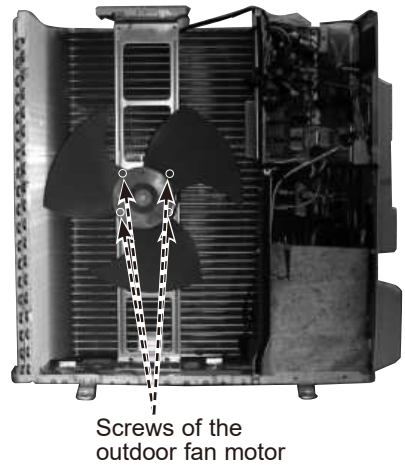

6. Removing the compressor and 4-way valve

(1) Remove the top panel, cabinet and service panel. (Refer to section 1.)
(2) Remove the back panel. (Refer to section 1.)
(3) Remove the inverter assembly. (Refer to section 2.)
(4) Recover gas from the refrigerant circuit.
NOTE: Recover gas from the pipes until the pressure gauge shows 0 kg/cm^2 (0 MPa).
(5) Detach the brazed part of the suction and the discharge pipes connected with compressor.
(6) Remove the compressor nuts.
(7) Remove the compressor.
(8) Detach the brazed parts of 4-way valve and pipes. (Photo 5)

Photo 8

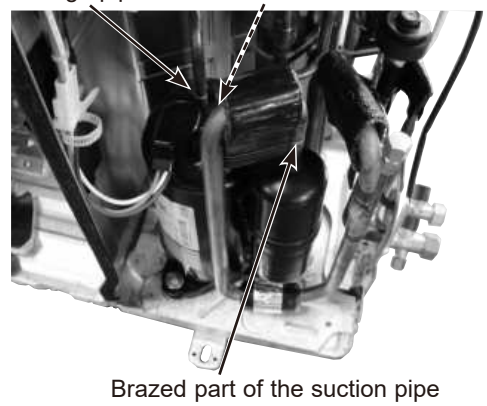

MITSUBISHI ELECTRIC CORPORATION

HEAD OFFICE: TOKYO BUILDING, 2-7-3, MARUNOUCHI, CHIYODA-KU, TOKYO 100-8310, JAPAN

© Copyright 2009 MITSUBISHI ELECTRIC CORPORATION
Issued: Jun. 2021. No. OBH543 REVISED EDITION-G
Issued: Jan. 2015. No. OBH543 REVISED EDITION-F
Issued: Dec. 2012. No. OBH543 REVISED EDITION-E
Issued: Apr. 2012. No. OBH543 REVISED EDITION-D
Issued: Apr. 2011. No. OBH543 REVISED EDITION-C
Issued: Apr. 2011. No. OBH543 REVISED EDITION-B
Issued: Sep. 2010. No. OBH543 REVISED EDITION-A 5
Published: Jul. 2009. No. OBH543 5
Made in Japan

Specifications are subject to change without notice.