MITSUBISHI ELECTRIC

SPLIT-TYPE AIR CONDITIONERS

Revision A:
- Inverter P.C. board and condenser net for MUZ-HE24NA have been changed.

Please void OBB686.

OUTDOOR UNIT

No. OBB686
REVISED EDITION-A

PARTS CATALOG

Models

MUZ-HE09NA
MUZ-HE12NA
MUZ-HE15NA
MUZ-HE18NA
MUZ-HE24NA

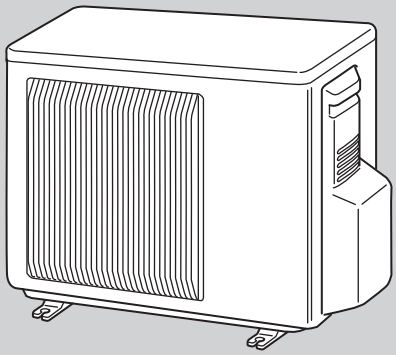

MUZ-HE09NA
MUZ-HE12NA
MUZ-HE15NA

CONTENTS

1. RoHS PARTS LIST 2
2. OPTIONAL PARTS 10

SERVICE MANUAL (OBH686)

NOTE:
RoHS compliant products have <G> mark on the spec name plate.

Revision A:
• Inverter P.C. board and condenser net for MUZ-HE24NA have been changed.

1 RoHS PARTS LIST

MUZ-HE09NA MUZ-HE12NA MUZ-HE15NA

1-1. OUTDOOR UNIT STRUCTURAL PARTS AND FUNCTIONAL PARTS

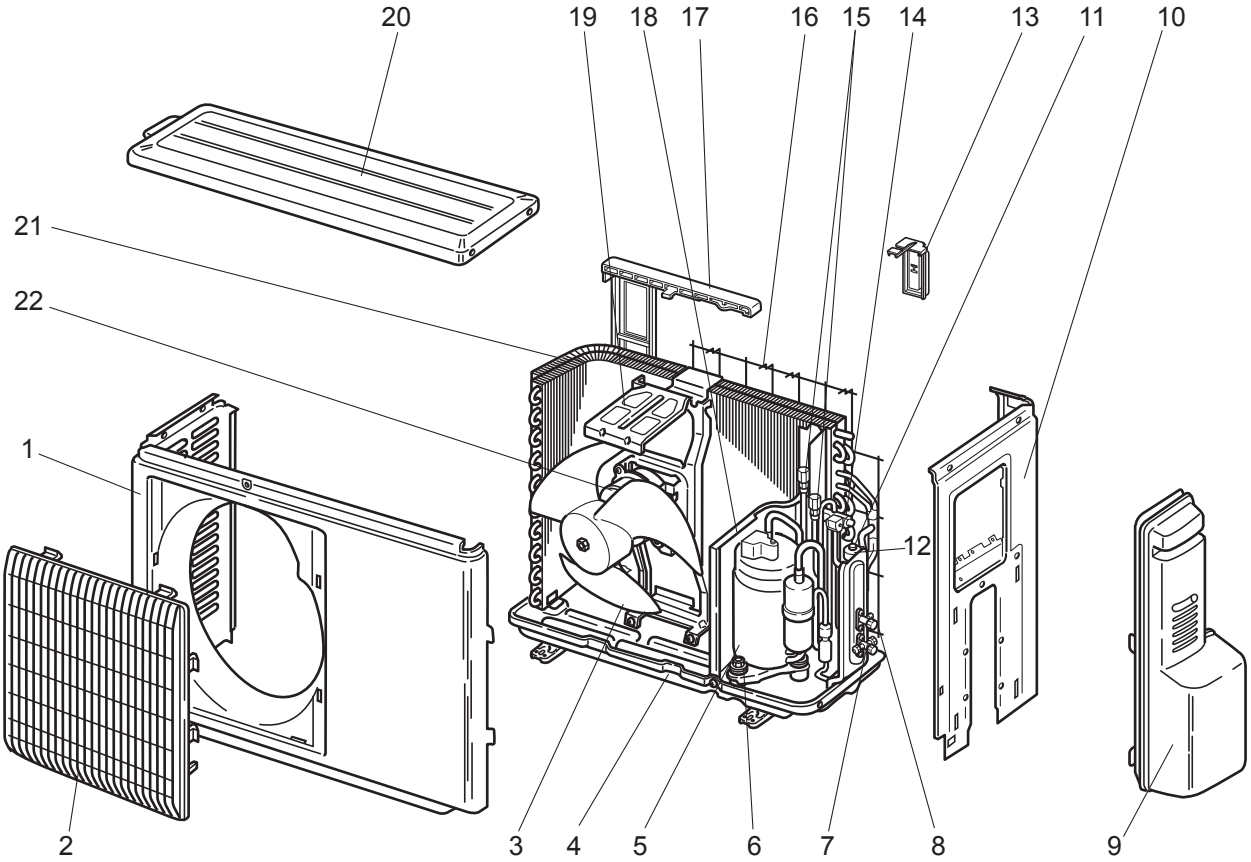

RoHS PARTS LIST

1-1. OUTDOOR UNIT STRUCTURAL PARTS AND FUNCTIONAL PARTS

Part numbers that are circled are not shown in the illustration.

No.	RoHS	Part No.	Part name	Symbol in Wiring Diagram	Q'ty/unit MUZ-HE 09NA	12NA	15NA	Remarks
1	G	E12 927 232	CABINET		1	1	1	
2	G	E12 927 521	GRILLE		1	1	1	
3	G	E12 927 501	PROPELLER		1	1	1	
4	G	E12 A82 290	BASE		1	1	1	
5	G	E12 E79 900	COMPRESSOR	MC	1			KNB073FQDHC
	G	E12 E80 900	COMPRESSOR	MC		1		KNB092FQAHC
	G	E12 G73 900	COMPRESSOR	MC			1	SNB130FQBHT
6	G	E12 C34 506	COMPRESSOR RUBBER SET				3	3RUBBERS/SET
	G	E12 065 506	COMPRESSOR RUBBER SET		3	3		3RUBBERS/SET
7	G	E12 A54 661	STOP VALVE (GAS) (ø9.52)		1	1		ø3/8
	G	E12 A56 661	STOP VALVE (GAS) (ø12.7)				1	ø1/2
8	G	E12 927 662	STOP VALVE (LIQUID) (ø6.35)		1	1	1	ø1/4
9	G	E12 A49 245	SERVICE PANEL		1	1	1	
10	G	E12 E79 233	BACK PANEL		1	1	1	
11	G	E12 A54 640	EXPANSION VALVE				1	
	G	E12 927 640	EXPANSION VALVE		1	1		
12	G	E12 927 493	EXPANSION VALVE COIL	LEV	1	1	1	
13	G	E12 928 079	THERMO HOLDER		1			
	G	E12 930 079	THERMO HOLDER			1	1	
14	G	E12 A54 961	4-WAY VALVE		1	1	1	
15	G	E12 E79 641	SERVICE PORT		2	2	2	1PC/SET
16	G	E12 928 523	CONDENSER NET		1			
	G	E12 930 523	CONDENSER NET			1	1	
17	G	E12 928 525	CONDENSER WIRE NET		1			
	G	E12 930 525	CONDENSER WIRE NET			1	1	
18	G	E12 D69 293	SEPARATOR		1			
	G	E12 C34 293	SEPARATOR			1	1	
19	G	E12 929 515	MOTOR SUPPORT			1	1	
	G	E12 927 515	MOTOR SUPPORT		1			
20	G	E12 927 297	TOP PANEL		1	1	1	
21	G	E12 N09 630	OUTDOOR HEAT EXCHANGER		1			
	G	E12 N10 630	OUTDOOR HEAT EXCHANGER			1	1	
22	G	E12 E79 301	OUTDOOR FAN MOTOR	MF	1	1	1	RC0J55-□□
㉓	G	E12 927 937	CAPILLARY TUBE (ø3.0 × ø2.0 × 240)		1	1	1	O.D. 0.118 × I.D. 0.079 × 9-7/16
㉔	G	E12 735 936	CAPILLARY TUBE (ø3.0 × ø1.8 × 600)			2	2	O.D. 0.118 × I.D. 0.071 × 23-5/8

RoHS PARTS LIST

MUZ-HE09NA MUZ-HE12NA MUZ-HE15NA

1-2. OUTDOOR UNIT ELECTRICAL PARTS

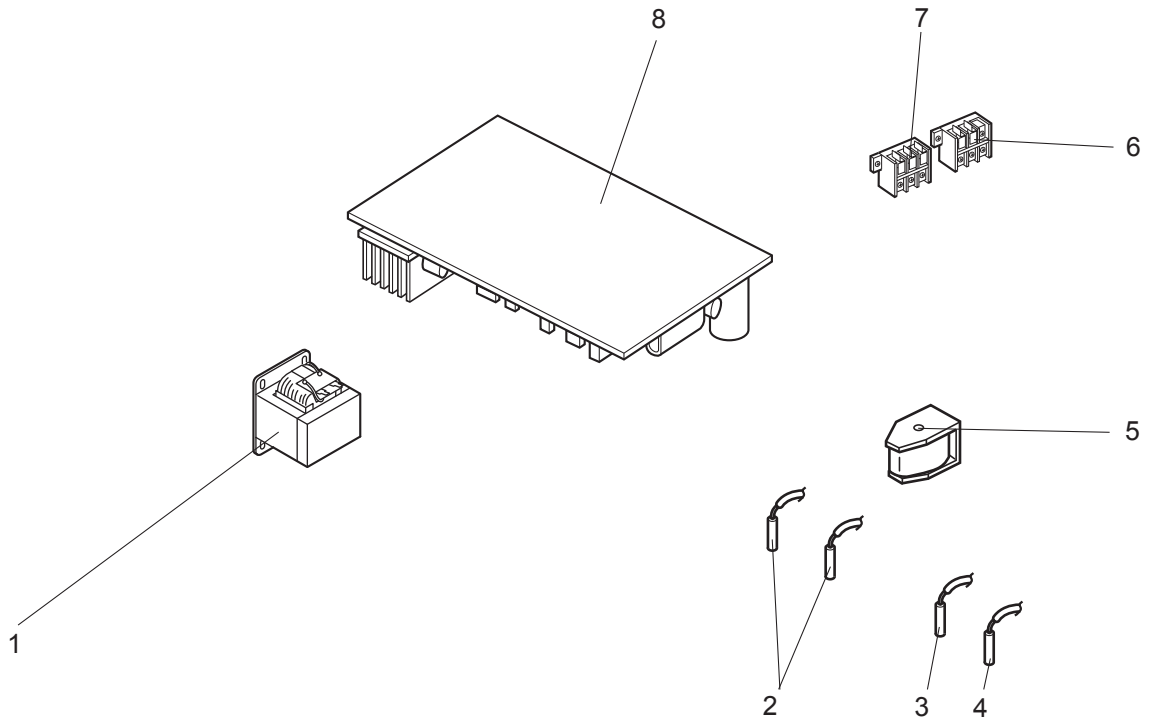

RoHS PARTS LIST

1-2. OUTDOOR UNIT ELECTRICAL PARTS

No.	RoHS	Part No.	Part name	Symbol in Wiring Diagram	Q'ty/unit MUZ-HE 09NA	12NA	15NA	Remarks
1	G	E12 G10 337	REACTOR	L61	1			
	G	E12 838 337	REACTOR	L61		1	1	
2	G	E12 C34 306	THERMISTOR SET	RT61, RT62	1	1	1	DEFROST, DISCHARGE
3	G	E12 927 308	AMBIENT TEMPERATURE THERMISTOR	RT65	1	1	1	
4	G	E12 C34 307	OUTDOOR HEAT EXCHANGER TEMPERATURE THERMISTOR	RT68	1	1	1	
5	G	E12 C85 490	R.V. COIL	21S4	1	1	1	
6	G	E12 A53 374	TERMINAL BLOCK	TB1	1	1	1	2P
7	G	E12 927 374	TERMINAL BLOCK	TB2	1	1	1	3P
8	G	E12 N38 451	INVERTER P.C. BOARD		1			Including heat sink and RT64
	G	E12 N39 451	INVERTER P.C. BOARD			1		
	G	E12 N40 451	INVERTER P.C. BOARD				1	

RoHS PARTS LIST

MUZ-HE18NA

1-3. OUTDOOR UNIT STRUCTURAL PARTS, ELECTRICAL PARTS AND FUNCTIONAL PARTS

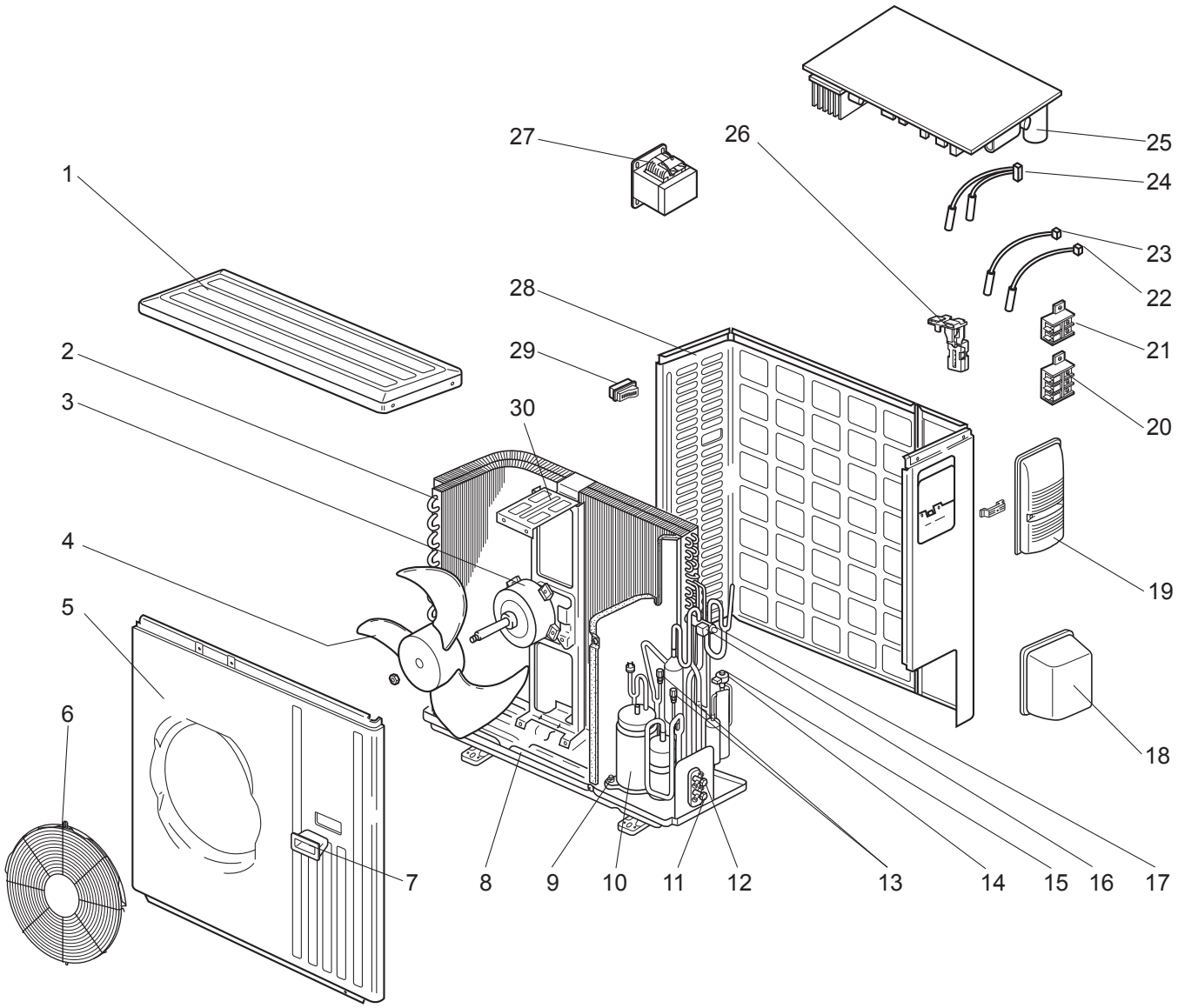

RoHS PARTS LIST

1-3. OUTDOOR UNIT STRUCTURAL PARTS, ELECTRICAL PARTS AND FUNCTIONAL PARTS

Part numbers that is circled is not shown in the illustration.

No.	RoHS	Part No.	Part Name	Symbol in Wiring Diagram	Q'ty/unit	Remarks
					MUZ-HE18NA	
1	G	E12 819 297	TOP PANEL		1	
2	G	E12 E82 630	OUTDOOR HEAT EXCHANGER		1	
3	G	E12 E34 301	OUTDOOR FAN MOTOR	MF	1	RC0J77-□□
4	G	E12 851 501	PROPELLER		1	
5	G	E12 819 232	CABINET		1	
6	G	E12 D84 521	FAN GUARD		1	Including ice guard
7	G	E12 819 009	HANDLE		1	
8	G	E12 D86 290	BASE		1	
9	G	E12 C34 506	COMPRESSOR RUBBER SET		3	3RUBBERS/SET
10	G	E12 G73 900	COMPRESSOR	MC	1	SNB130FQBHT
11	G	E12 A56 661	STOP VALVE (GAS) (ø12.7)		1	ø1/2
12	G	E12 927 662	STOP VALVE (LIQUID) (ø6.35)		1	ø1/4
13	G	E12 E79 641	SERVICE PORT		2	1 PC/SET
14	G	E12 E05 493	EXPANSION VALVE COIL	LEV	1	
15	G	E12 851 640	EXPANSION VALVE		1	
16	G	E12 E82 490	R.V. COIL	21S4	1	
17	G	E12 A56 961	4-WAY VALVE		1	
18	G	E12 819 650	VALVE COVER		1	
19	G	E12 E82 245	SERVICE PANEL		1	
20	G	E12 935 374	TERMINAL BLOCK	TB2	1	3 P
21	G	E12 A54 374	TERMINAL BLOCK	TB1	1	2 P
22	G	E12 E05 307	OUTDOOR HEAT EXCHANGER TEMP. THERMISTOR	RT68	1	
23	G	E12 D58 309	AMBIENT TEMPERATURE THERMISTOR	RT65	1	
24	G	E12 E05 308	THERMISTOR SET	RT61,RT62	1	DEFROST, DISCHARGE
25	G	E12 N41 451	INVERTER P.C. BOARD		1	Including heat sink and RT64
26	G	E12 E82 079	THERMO HOLDER		1	
27	G	E12 D58 337	REACTOR	L61	1	
28	G	E12 E82 233	BACK PANEL (OUT)		1	
29	G	E12 817 009	HANDLE		1	
30	G	E12 851 515	MOTOR SUPPORT		1	
㉛	G	E12 853 936	CAPILLARY TUBE (ø3.6 × ø2.4 × 50)		1	O.D. 0.142 × I.D. 0.094× 1-31/32

RoHS PARTS LIST

MUZ-HE24NA

1-4. OUTDOOR UNIT STRUCTURAL PARTS, ELECTRICAL PARTS AND FUNCTIONAL PARTS

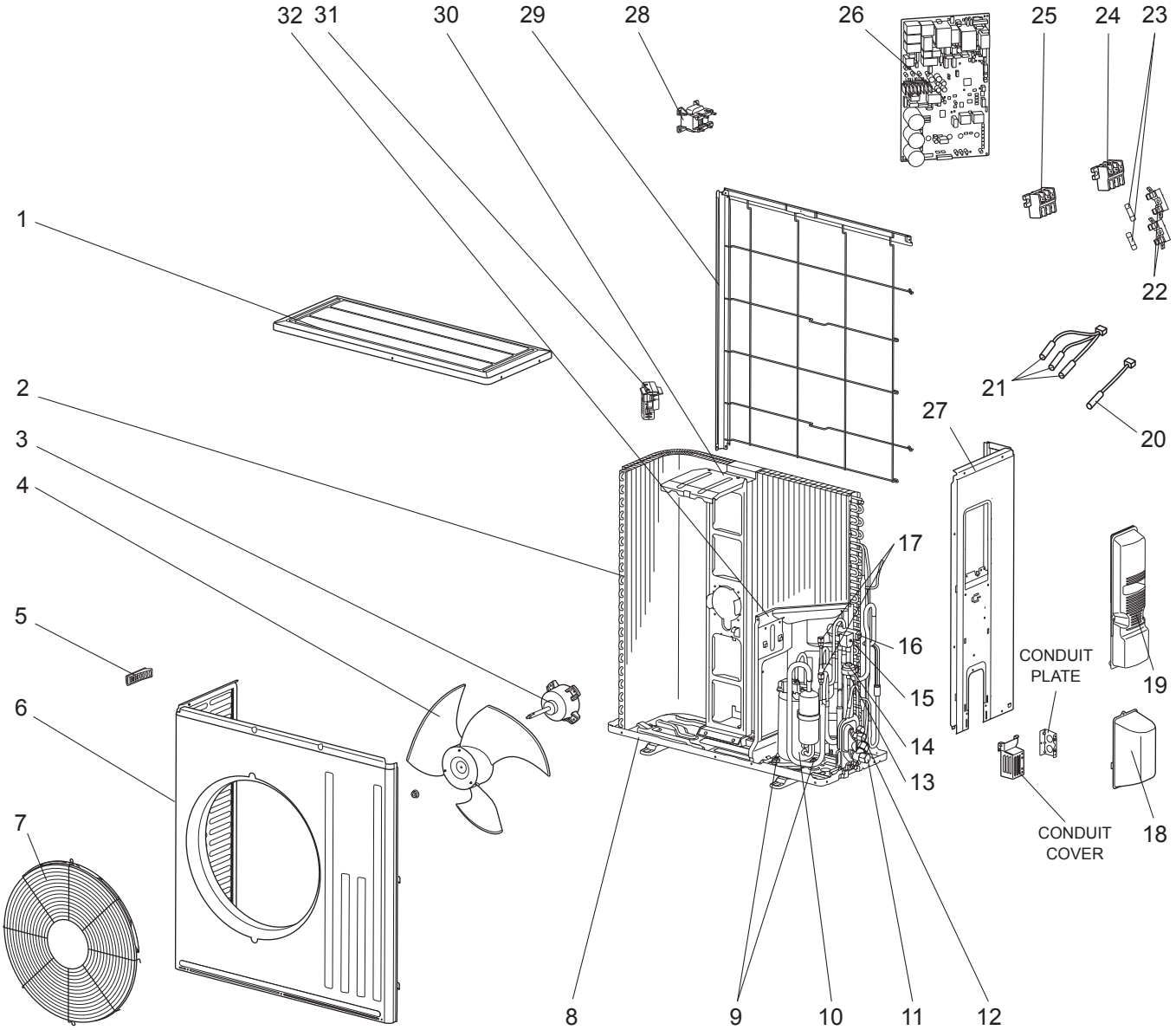

RoHS PARTS LIST

1-4. OUTDOOR UNIT STRUCTURAL PARTS, ELECTRICAL PARTS AND FUNCTIONAL PARTS

Part numbers that is circled is not shown in the illustration.

No.	RoHS	Part No.	Part Name	Symbol in Wiring Diagram	Q'ty/unit	Remarks
					MUZ-HE24NA	
1	G	E12 L87 297	TOP PANEL		1	
2	G	E12 J67 630	OUTDOOR HEAT EXCHANGER		1	
3	G	E12 F76 301	OUTDOOR FAN MOTOR	MF	1	RC0J77-□□
4	G	E12 F28 501	PROPELLER		1	
5	G	E12 817 009	HANDLE		1	
6	G	E12 F28 232	CABINET		1	
7	G	E12 F73 521	FAN GUARD		1	Including ice guard
8	G	E12 F28 290	BASE		1	
9	G	E12 C34 506	COMPRESSOR RUBBER SET		3	3 RUBBERS/SET
10	G	E12 F76 900	COMPRESSOR	MC	1	SNB172FQKMT
11	G	E12 F76 661	STOP VALVE (GAS) (ø15.88)		1	ø5/8
12	G	E12 F29 662	STOP VALVE (LIQUID) (ø9.52)		1	ø3/8
13	G	E12 F28 493	EXPANSION VALVE COIL	LEV	1	
14	G	E12 853 640	EXPANSION VALVE		1	
15	G	E12 F76 490	R.V. COIL	21S4	1	
16	G	E12 A56 961	4-WAY VALVE		1	
17	G	E12 E79 641	SERVICE PORT		2	
18	G	E12 F28 650	VALVE COVER		1	
19	G	E12 J61 245	SERVICE PANEL		1	
20	G	E12 F76 309	AMBIENT TEMPERATURE THERMISTOR	RT65	1	
21	G	E12 F28 308	THERMISTOR SET	RT61,RT62, RT68	1	DEFROST, DISCHARGE, OUTDOOR HEAT EXCHANGER TEMPERATURE
22	G	E17 001 241	FUSE HOLDER		2	
23	G	E17 250 382	FUSE	F65, F66	2	T6.3AL250V
24	G	E12 L87 374	TERMINAL BLOCK	TB1	1	3 P
25	G	E12 F28 374	TERMINAL BLOCK	TB2	1	3 P
26	G	E12 P67 451	INVERTER P.C. BOARD		1	Including heat sink and RT64
27	G	E12 F76 233	BACK PANEL (OUT)		1	
28	G	E12 F28 337	REACTOR	L	1	
29	G	E12 L87 523	CONDENSER NET		1	
30	G	E12 J52 515	MOTOR SUPPORT		1	
31	G	E12 F76 079	THERMO HOLDER		1	
32	G	E12 F76 293	SEPARATOR		1	
33	G	E12 527 936	CAPILLARY TUBE (ø4.0 × ø2.4 × 100)		1	O.D. 0.157 × I.D. 0.094 × 3-15/16

2 OPTIONAL PARTS

2-1. DRAIN SOCKET

Model	Parts No.
MUZ-HE09NA MUZ-HE12NA MUZ-HE15NA	MAC-860DS

Model	Parts No.
MUZ-HE18NA	MAC-811DS

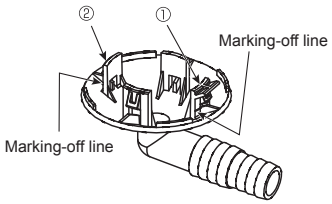

Installing a Drain Socket

For ø 1-5/8 (ø 42) hole

Put the tab ① in the hole first, and then the tab ②.

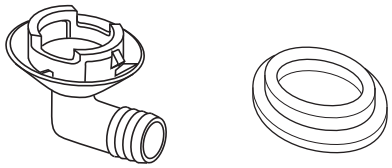

2-2. DEFROST HEATER

Model	Parts No.
MUZ-HE09NA MUZ-HE12NA MUZ-HE15NA	MAC-640BH-U

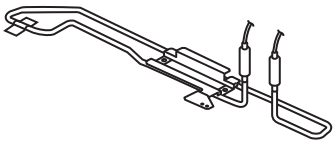

Components

①	Defrost heater	1	④	Cable tie	1
②	Aluminum tape	1	⑤	Self drilling screw	2
③	Heater support	1	⑥	Insulation	1

Model	Parts No.
MUZ-HE18NA	MAC-641BH-U

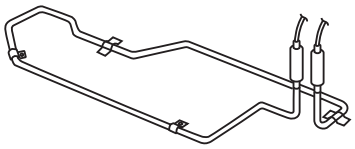

Components

①	Defrost heater	1	④	Cable tie	1	⑦	Heater cover A	1	⑧	Heater cover B	1	⑨	Heater cover C	1
②	Aluminum tape	3	⑤	Self drilling screw	9									
③	Heater support	2	⑥	Clamp	1									

Note: Refer to the installation manual for the installation.

Model	Parts No.
MUZ-HE24NA	MAC-642BH-U

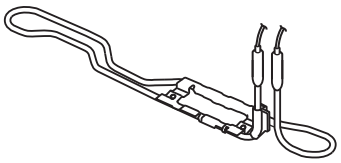

Components

①	Defrost heater	1	④	Cable clamp	1
②	Heater support	1	⑤	Self drilling screw	2
③	Cable tie	1	⑥	Wiring diagram	1

Note: Refer to the installation manual for the installation.

MITSUBISHI ELECTRIC CORPORATION

HEAD OFFICE: TOKYO BLDG., 2-7-3, MARUNOUCHI, CHIYODA-KU, TOKYO 100-8310, JAPAN

© Copyright 2014 MITSUBISHI ELECTRIC CORPORATION

Distributed in Nov. 2014. No. OBB686 REVISED EDITION-A
Distributed in Feb. 2014. No. OBB686
Made in Japan

New publication, effective Nov. 2014
Specifications are subject to change without notice.

OBB686A