MITSUBISHI ELECTRIC

M-SERIES

Air-Conditioners

MVZ-A12, 18, 24, 30, 36 AA7

INSTALLATION MANUAL

FOR INSTALLER

For safe and correct use, please read this installation manual thoroughly before installing the air-conditioner unit.

English

MANUEL D'INSTALLATION

POUR L'INSTALLATEUR

Veuillez lire le manuel d'installation en entier avant d'installer ce climatiseur pour éviter tout accident et vous assurer d'une utilisation correcte.

Français

Contents

Contents 2
1. Dimensions.....3
2. Inspect shipment 4
3. Safety precautions.....4
3.1. Before installation and electric work 4
3.2. Precautions for devices that use R410A refrigerant 5
3.3. Before getting started 5
3.4. Before getting installed (moved)-electrical work 5
3.5. Before starting the test run 6
4. Indoor unit accessories.....6
5. Selecting an installation site 6
6. Combining indoor units with outdoor units.....6
7. Installing the unit.....7
8. Duct connection.....7
9. Mount positions 8
9.1. Vertical installations 8
9.2. Horizontal right installations.....9
9.3. Horizontal left installations 10
9.4. Downflow installations 14
10. Air filter.....16
11. Refrigerant piping work.....17
11.1. Insulation.....18
11.2. Piping size.....18
12. Drain connections.....19
13. Electrical wiring.....20
13.1. Remote controllers.....21
13.2. Connecting line voltage 22
13.3. Condensate overflow safety switch connection (CN4F) 23
13.4. Changing blower external static pressure.....23
13.5. ERV (energy recovery ventilation) 24
13.6. Humidifier.....25
14. Test run.....26
14.1. Before test run 26
14.2. Test run 26
14.3. Self-check 26
14.4. AUTO RESTART FUNCTION 28

Unit:mm(in.)

Note 1.Keep the service space for maintenance at the front.

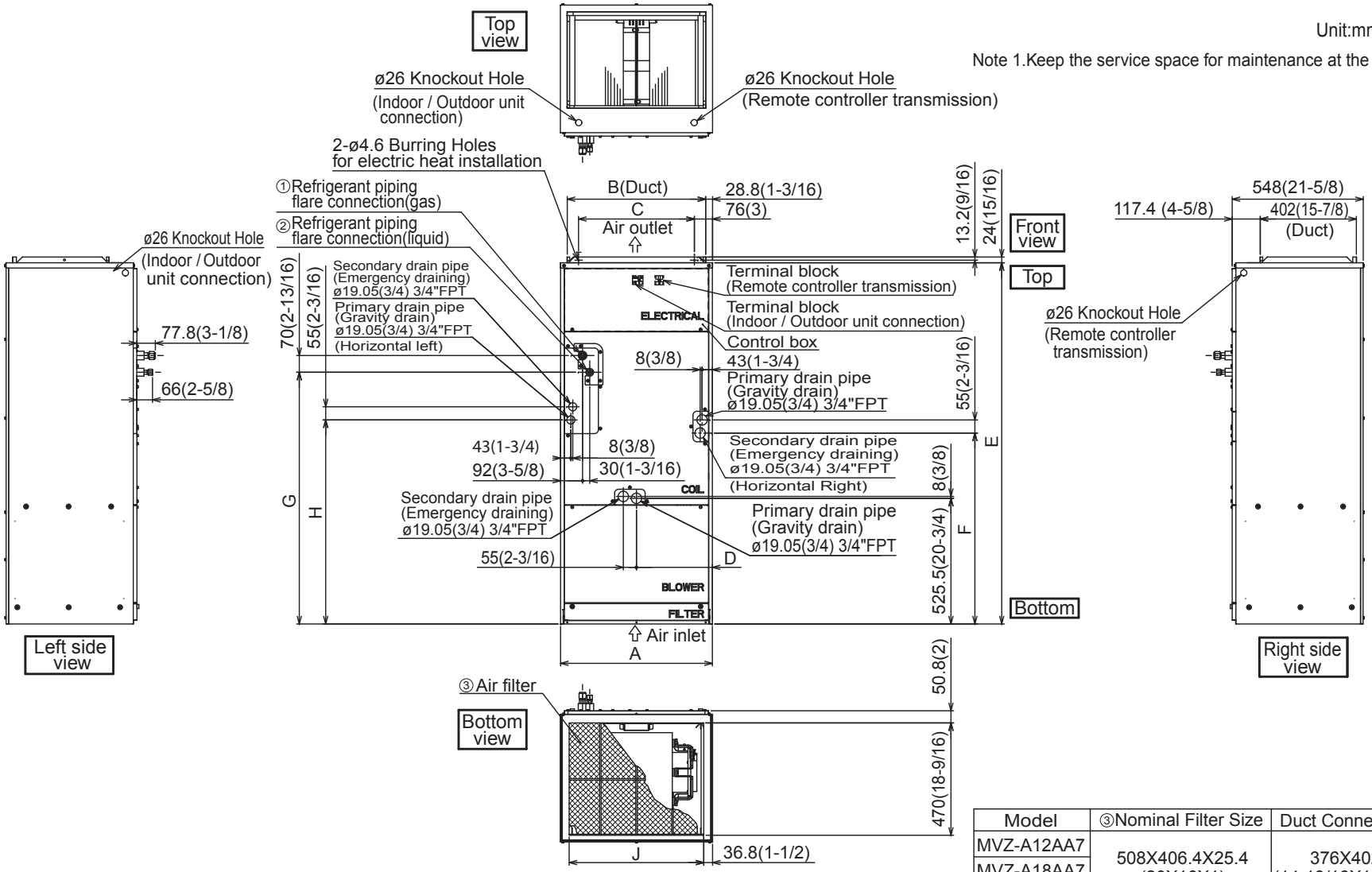

Model	A	B	C	D	E	F	G	H	J	①Gas pipe	②Liquid pipe
MVZ-A12AA7	432 (17)	376 (14-13/16)	281 (11-1/8)	224 (8-7/8)	1275 (50-1/4)	680 (26-13/16)	823 (32-7/16)	735.5 (29)	360 (14-3/16)	ø12.7 (1/2)	ø6.35 (1/4)
MVZ-A18AA7											
MVZ-A24AA7											
MVZ-A30AA7	534 (21)	477 (18-13/16)	382.6 (15-1/8)	266.5 (10-1/2)	1378 (54-1/4)	737 (29-1/16)	953.5 (37-9/16)	792 (31-3/16)	461 (18-3/16)	ø15.88 (5/8)	ø9.52 (3/8)
MVZ-A36AA7											

Model	③Nominal Filter Size	Duct Connection
MVZ-A12AA7	508X406.4X25.4 (20X16X1)	376X402 (14-13/16X15-7/8)
MVZ-A18AA7		
MVZ-A24AA7		
MVZ-A30AA7	508X508X25.4 (20X20X1)	477X402 (18-13/16X15-7/8)
MVZ-A36AA7		

2. Inspect shipment

These air handlers are completely factory assembled, and all components are performance tested. Each unit consists of a blower assembly, refrigerant coil and controls in an insulated, galvanized steel factory enclosure. Knockouts are provided for electrical wiring entrance. Check the unit rating plate to confirm specifications are as ordered. Upon receipt of equipment, carefully inspect it for possible damage. Take special care to examine the unit if the carton is damaged. If damage is found, it should be noted on the carrier's freight bill. Damage claims should be filed with the carrier immediately. Claims of shortages should be filed with the seller within 5 days.

3. Safety precautions

3.1. Before installation and electric work

Before installing the unit, make sure you read all the "Safety precautions".
The "Safety precautions" provide very important points regarding safety. Make sure you follow them.

Symbols used in the text

⚠ **Warning:**
Describes precautions that should be observed to prevent danger of injury or death to the user

⚠ **Caution:**
Describes precautions that should be observed to prevent damage to the unit

⚠ **Warning:**
Carefully read the labels affixed to the main unit.

⚠ **Warning:**

- **The unit must be installed by an authorized Dealer or properly trained technician.**
  - Improper installation by the user may result in water leakage, electric shock, or fire.
- **Install the air unit in a place that can withstand its weight.**
  - Inadequate strength may cause the unit to fall down, resulting in injuries.
- **Use the specified cables for wiring. Make the connections securely so that the outside force of the cable is not applied to the terminals.**
  - Inadequate connection and fastening may generate heat and cause a fire. Provide strain relief to wiring.
- **Prepare for typhoons, hurricanes, earthquakes etc. and install the unit at the specified place.**
  - Improper installation may cause the unit to topple and result in injury.
- **Never repair the unit. If the air conditioner must be repaired, consult the dealer.**
  - If the unit is repaired improperly, water leakage, electric shock, or fire may result.
- **Do no touch the heat exchanger fins.**
  - Improper handling may result in injury.
- **When handling the product, always wear protective equipment.**
  - EG: Gloves, full arm protection, and safety glasses.
  - Improper handling may result in injury.
- **Install the air conditioner according to this Installation Manual.**
  - If the unit is installed improperly, water leakage, electric shock, or fire may result.
- **Have all electric work done by a licensed electrician according the "National Electrical code and local Electrical codes" and "Interior Wire Regulations" and the instructions given in this manual and always use a special circuit.**
  - If the power source capacity is inadequate or electric work is performed improperly, electric shock and fire may result.
- **Keep the electric parts away from water (washing water etc.).**
  - It might result in electric shock, catching fire or smoke.
- **When cleaning the Heat Exchanger and Drain Pan, ensure the Control Box, Motor and LEV remain dry, water proof covering.**
- **When installing and moving the air conditioner to another site, do not charge it with a refrigerant different from the refrigerant specified on the unit.**
  - If a different refrigerant or air is mixed with the original refrigerant, the refrigerant cycle may malfunction and the unit may be damaged.
- **When moving and reinstalling the air conditioner, consult the dealer or an authorized technician.**
  - If the air conditioner is installed improperly, water leakage, electric shock, or fire may result.
- **Do not reconstruct or change the settings of the protection devices.**
  - If the pressure switch, thermal switch, or other protection devices are shorted and operated forcibly, or parts other than those specified by Mitsubishi Electric are used, fire or explosion may result.
- **To dispose of this product, consult your dealer.**
- **Do not use a leak detection additive.**
- **Always use an air cleaner, humidifier, electric heater, and other accessories specified by Mitsubishi Electric.**
  - Ask an authorized technician to install the accessories. Improper installation by the user may result in water leakage, electric shock, or fire.
- **If refrigerant gas leaks during installation work, ventilate the room.**
  - If the refrigerant gas comes into contact with a flame, poisonous gases will be released.
- **Securely install the outdoor unit terminal cover (panel).**
  - If the terminal cover (panel) is not installed properly, dust or water may enter the outdoor unit and fire or electric shock may result.
- **If the air conditioner is installed in a small room, measures must be taken to prevent the refrigerant concentration from exceeding the safety limit even if the refrigerant should leak.**
  - Consult the dealer regarding the appropriate measures to prevent the safety limit from being exceeded. Should the refrigerant leak and cause the safety limit to be exceeded, hazards due to lack of oxygen in the room could result.

- **After completing installation work, make sure that refrigerant gas is notleaking.**
  - If the refrigerant gas leaks and is exposed to a fan heater, stove, oven, or other heat source, it may generate noxious gases.
- **Children should not be allowed around the air conditioning equipment**
- **The installer and system specialist shall ensure there is no refrigerant leakage according to local regulations and standards.**
- **Pay special attention to the location the unit is installed in. Refrigerant is heavier than air so locations such as basements or crawlspaces where refrigerant can accumulate can become dangerous.**
- **The appliance is intended for use by persons (including children) with reduced physical, sensory or mental capabilities, or lack of experience and knowledge, unless they have been given supervision or instruction concerning use of the appliance by a person responsible for their safety.**
- **If the supply cord is damaged, it must be replaced by the manufacturer, its service agent or similarly qualified persons in order to avoid a hazard.**
- **Do not use refrigerant other than the type indicated in the manuals provided with the unit and on the nameplate.**
  - Doing so may cause the unit or pipes to burst, or result in explosion of fire during use, during repair, or at the time of disposal of the unit.
  - It may also be in violation of applicable laws.
  - MITSUBISHI ELECTRIC CORPORATION cannot be held responsible for malfunctions or accidents resulting for the use of the wrong type of refrigerant.

3.2. Precautions for devices that use R410A refrigerant

⚠ Caution:

- **Do not use the existing refrigerant piping.**
  - The old refrigerant and refrigeration oil in the existing piping contains a large amount of chlorine which may cause the refrigerator oil of the new unit to deteriorate.
- **Use refrigerant piping made of C1220 (Cu-DHP) phosphorus deoxidized copper as specified in the JIS H3300 "Copper and copper alloy seamless pipes and tubes". In addition, be sure that the inner and outer surfaces of the pipes are clean and free of hazardous sulphur, oxides, dust/dirt, shaving particles, oils, moisture, or any other contaminants.**
  - Contaminants on the inside of the refrigerant piping may cause the refrigerant residual oil to deteriorate
- **Store the piping to be used during installation indoors and keep both ends of the piping sealed until just before brazing. (Store elbows and other joints in a plastic bag.)**
  - If dust, dirt, or water enters the refrigerant cycle, deterioration of the oil and compressor trouble may result.
- **Use liquid refrigerant to fill the system.**
  - If gas refrigerant is used to seal the system, the composition of the refrigerant in the cylinder will change and performance may drop.
- **Do not use a refrigerant other than R410A.**
  - If another refrigerant is used, the chlorine in the refrigerant may cause the refrigerator oil to deteriorate.
- **Use a vacuum pump with a reverse flow check valve.**
  - The vacuum pump oil may flow back into the refrigerant cycle and cause the refrigerator oil to deteriorate.
- **Do not use the following tools that are used with conventional refrigerants.**
  - (Gauge manifold, charge hose, gas leak detector, reverse flow check valve, refrigerant charge base, vacuum gauge, refrigerant recovery equipment).
  - If the conventional refrigerant and refrigeration oil are mixed in the R410A, the refrigerant may deteriorate.
  - If water is mixed in the R410A, the refrigeration oil may deteriorate.
  - Since R410A does not contain any chlorine, gas leak detectors for conventional refrigerant will not react to it.
  - Do not use a charging cylinder. May cause the refrigerant to deteriorate.
- **Be especially careful when managing the tools.**
  - If dust, dirt, or water gets in the refrigeration system, the refrigerant may deteriorate.

3.3. Before getting started

⚠ Caution:

- **Do not install the unit where combustible gas may leak.**
  - If the gas leaks and accumulates around the unit, an explosion may result.
- **Do not use the air conditioner in special environments.**
  - Oil, steam, sulfuric smoke, etc. can significantly reduce the performance of the air conditioner or damage its parts.
- **When installing the unit in a hospital, communication station, or similar place, provide sufficient protection against noise.**
  - The inverter equipment, private power generator, high-frequency medical equipment, or radio communication equipment may cause the air conditioner to operate erroneously, or fail to operate. On the other hand, the air conditioner may affect such equipment by creating noise that disturbs medical treatment of image broadcasting.
- **Do not install the unit on a structure that may cause leakage.**
  - When the room humidity exceeds 80% or when the drain pipe is clogged, condensation may drip from the indoor unit. Perform collective drainage work together with the outdoor unit, as required.
- **When the ambient dew point temperature exceeds 75 °F (24 °C), dew condensation may occur on the unit surface. Perform appropriate treatment to avoid dew condensation.**

3.4. Before getting installed (moved)-electrical work

⚠ Caution:

- **Ground the unit.**
  - Do not connect the ground wire to gas or water pipes, lightning rods, or telephone ground lines. Improper grounding may result in electric shock.
- **Install the power cable so that tension is not applied to the cable.**
  - Tension may cause the cable to break and generate heat and cause a fire.
- **Install a leak circuit breaker as required.**
  - If a leak circuit breaker is not installed, electric shock may result.
- **Use power line cables of sufficient current carrying capacity and rating.**
  - Cables that are too small may leak, generate heat, and cause a fire.

- **Use only a circuit breaker and fuse of the specified capacity.**
  - A fuse or circuit breaker of a larger capacity or a steel or copper wire may result in a general unit failure or fire.
- **Do not wash the air conditioner units.**
  - Washing them may cause an electric shock.
- **Be careful that the installation base is not damaged by long use.**
  - If the damage is left uncorrected, the unit may fall and cause personal injury or property damage.
- **Install the drain piping according to this Installation Manual to ensure proper drainage. Wrap thermal insulation around the pipes to prevent condensation.**
  - Improper drain piping may cause water leakage and damage to furniture and other possessions.
- **Be very careful about product transportation.**
  - If the product weighs more than 20 kg [44 lb], then more than one person should carry the product.
  - Some products use PP bands for packaging. Do not use any PP bands for a means of transportation; it is dangerous.
  - Do not touch the heat exchanger fins. Doing so may cut your fingers.
- **Safely dispose of the packing materials.**
  - Packing materials, such as nails and other metal or wooden parts, may cause stabs or other injuries.
  - Tear apart and throw away plastic packaging bags so that children will not play with them. If children play with a plastic bag which was not torn apart, they face the risk of suffocation.

3.5. Before starting the test run

⚠ Caution:

- **Turn on the power at least 12 hours before starting operation.**
  - Starting operation immediately after turning on the main power switch can result in severe damage to internal parts. Keep the power switch turned on during the operational season.
- **Do not touch the switches with wet fingers.**
  - Touching a switch with wet fingers can cause electric shock.
- **Do not touch the refrigerant pipes during and immediately after operation.**
  - During and immediately after operation, the refrigerant pipes may be hot or may be cold, depending on the condition of the refrigerant flowing through the refrigerant piping, compressor, and other refrigerant cycle parts. Your hands may suffer burns or frostbite if you touch the refrigerant pipes.
- **Do not operate the air conditioner with the panels and guards removed.**
  - Rotating, hot, or high-voltage parts can cause injuries.
- **Do not turn off the power immediately after stopping operation.**
  - Always wait at least five minutes before turning off the power. Otherwise, water leakage and trouble may occur.

4. Indoor unit accessories

Part No.		Qty
1	Plastic tie	4
2	Plastic tube	2
3	Installation Manual	1
4	Operation Manual	1
5	Drain pan seal	2

5. Selecting an installation site

- Avoid locations exposed to outside air.
- Select a location free of obstructions to the airflow in and out of the unit.
- Avoid locations exposed to steam or vapor
- Avoid locations where combustible gas may leak, settle or be generated.
- Avoid installation near machines emitting high-frequency waves (high frequency welders, etc.).
- Avoid locations where the airflow is directed at a fire alarm sensor. (Hot air could trigger the alarm during operation)
- Avoid places where acidic solutions are frequently used.
- Avoid places where sulphur-based or other sprays are commonly used.
- When the air handler is installed in the horizontal position please install a drain pan under entire cabinet.
- Install sufficient thermal insulation to prevent condensation from forming on the outlet and inlet ducts.

6. Combining indoor units with outdoor units

For combining indoor units with outdoor units, refer to the outdoor unit's installation manual.

7. Installing the unit

The air handler can be installed in a vertical, horizontal **(Right and Left)** and Downflow configuration as shown in step 9.1. through 9.4. The units are designed for “0” zero clearance to combustibles. 24” is required for service access to the front of the unit. (See Installation Clearance) Regardless of mounting configuration, the air handler must be mounted level to facilitate proper condensate drainage.

Installation Clearance

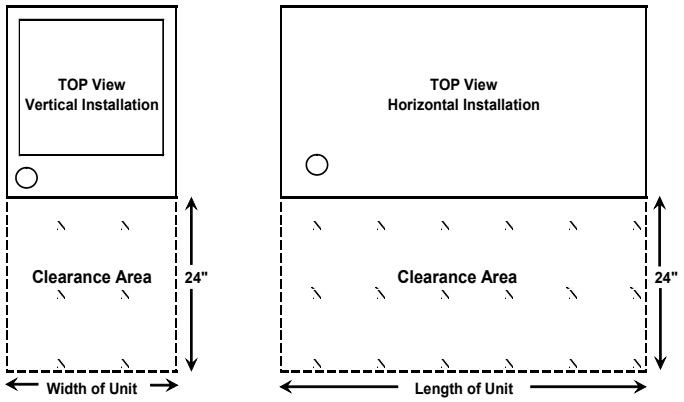

8. Duct connection

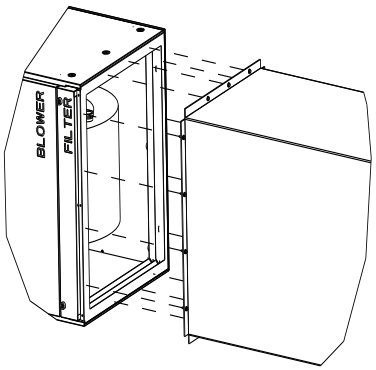

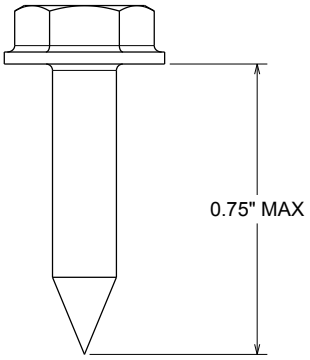

-See the outline drawing for the size of the duct connection.
-Use flanged ducts for connections to return
-Do not use sheetmetal screws longer that 0.75” to secure any ductwork to the air handler

9. Mount positions

9.1. Vertical installations

The air handler must be supported on the bottom only and set on a solid floor with a return plenum below or field supplied supporting frame or plenum. Securely attach the air handler to the floor or supporting frame or plenum.
A single side return can be used for the MVZ-A12, MVZ-A18 and MVZ-A24 only. Dual side returns must be used on all other models to ensure proper air flow. If the side return is used **it is the responsibility of the installer to ensure the ducts are properly sized and sealed to the cabinet**. When cutting in to the side of the cabinet, use the provided dimples to avoid damaging any internal structure or wiring.

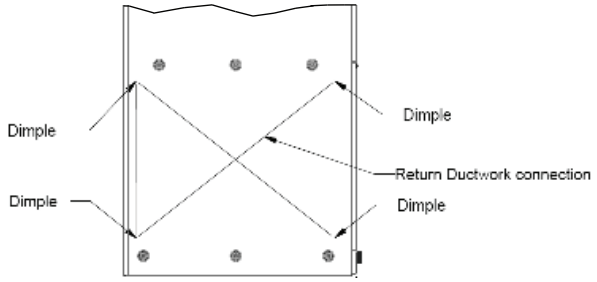

SIDE RETURN

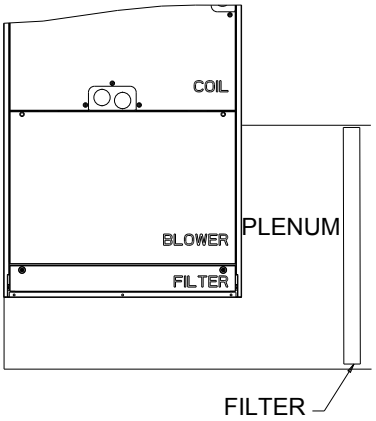

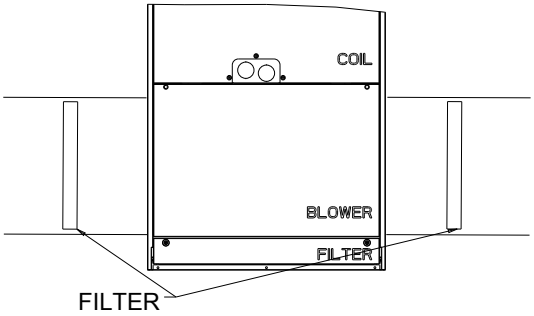

DUAL SIDE RETURN
SEAL BOTTOM OF AIR HANDLER
ADD TWO FILTERS

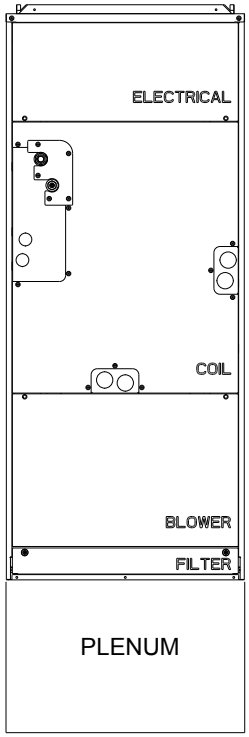

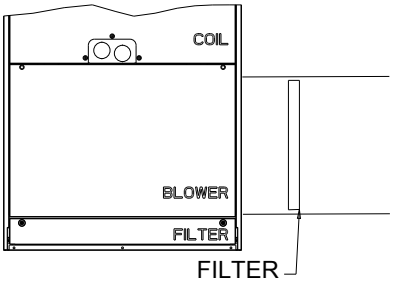

SINGLE SIDE RETURN (MVZ-A12, A18 & A24)
SEAL BOTTOM OF AIR HANDLER
ADD FILTER

9.2. Horizontal right installations

Refer to section 9.3. Step 1 to 4 & 12 for removing the entire coil assembly from the air handler cabinet. This will require removing the Filter, Blower, Electrical and Coil Panels along with the brackets that secure the coil assembly. Be sure to also route the thermistor wires out of the electrical portion of the air handler so the coil can be removed.

Once the coil is removed, the two clear plastic tubes included in the accessory bag will need to be attached to the top drain pan. First, remove the lower rubber plugs in the top drain pan. Next, install the clear plastic tubes which are included in the accessory bag. Ensure the plastic tubes drain into the pan. Also, be sure the clear plastic tubes do not have any restriction. Cutting of the plastic tube is required, please refer to the table for length. Finally, secure the clear plastic tubes to the top drain pan per Detail A. Then to the metal brackets supporting the coil to the top drain pan with the provided plastic ties as shown.

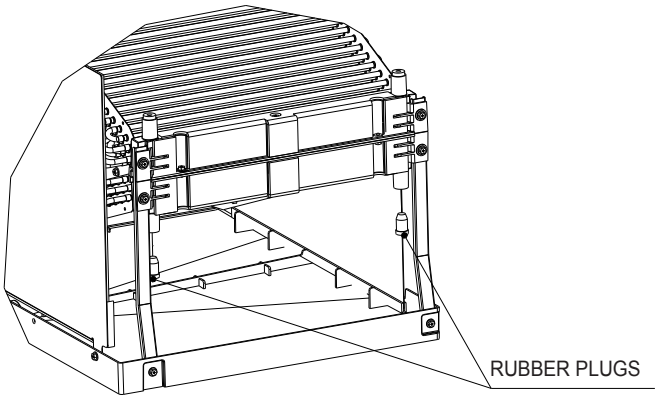

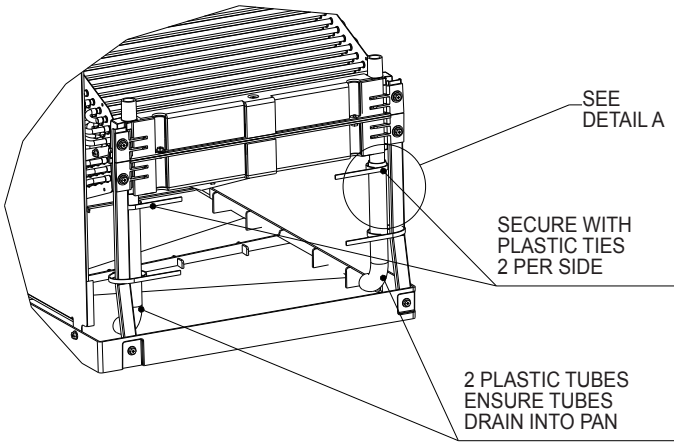

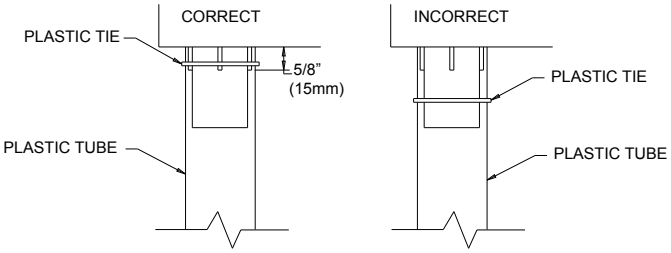

DETAIL A

Model	Tube Length
MVZ-A12, 18, 24	4.9 in. (125 mm)
MVZ-A30, 36	6.9 in. (175 mm)

Reinstall the coil assembly along with bracket(s) that secure(s) it. Failure to reinstall the brackets will result in capacity loss and condensation formation inside the cabinet. The wiring harness for the thermistor connector will also reroute into the electrical section and plug into **CN44**. Refer to 9.3. Step 1 to 4 in reverse order to reassemble the panels. Ensure the proper knockouts are removed for drainage and electrical connections.

NOTE: For Horizontal installation an auxiliary drain pan must be installed.

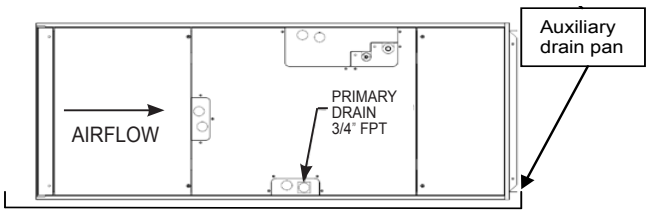

Horizontal Right
Fan assembly rotation not required

9.3. Horizontal left installations

For horizontal left installation the drain pan will need to be moved to the opposite side of the coil. This can be done by moving the two brackets and drain pan to the left of the coil. This way, the condensate that formed on the coil will fall in the drain pan. Also, the appropriate knockouts for the drains will need to be removed once the drain pan is in its correct position.
In addition to relocating the side drain pan, the fan assembly will also need to be removed rotated 180° and reinstalled. The motor has to be closest to the ground. The two clear plastic tubes included in the accessory bag will also need to be attached to the top drain pan. See instructions below.

Directions for rotating fan for Horizontal Left Installation:

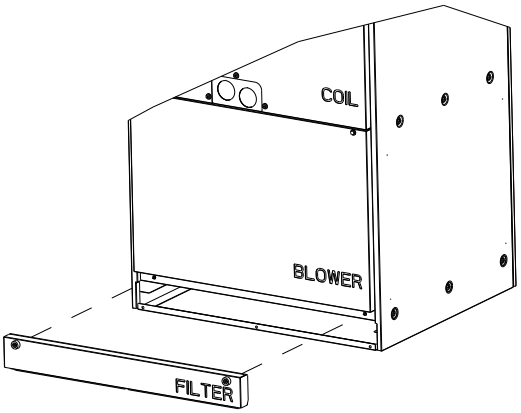

Step. 1 Remove the panel marked “FILTER”.

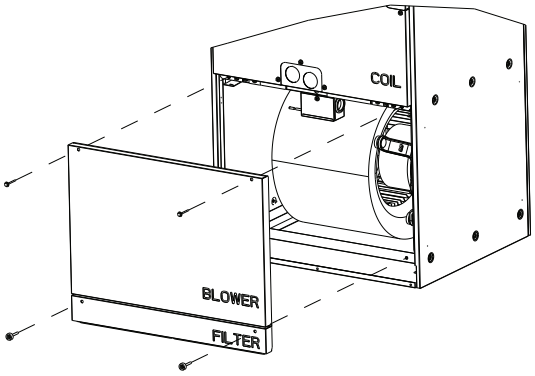

Step. 2 Remove the panel marked “BLOWER”.

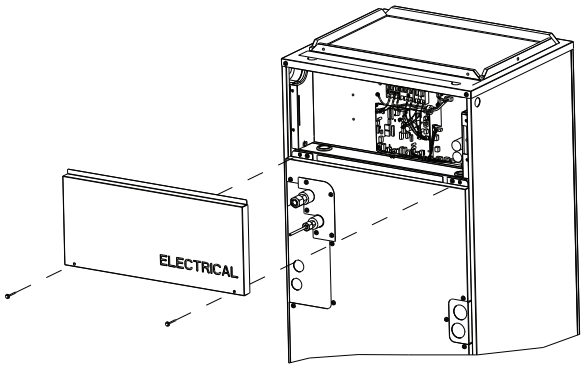

Step. 3 Remove the panel marked “ELECTRICAL”

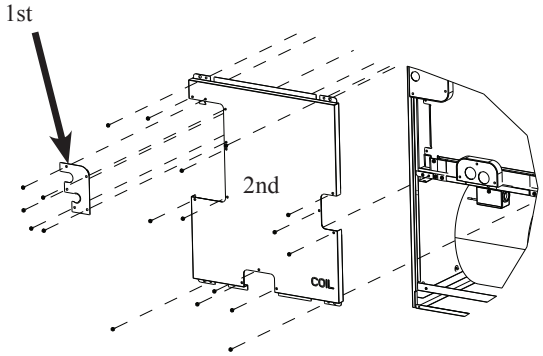

Step. 4a Remove the screws securing the (3) panels to the COIL panel shown in the image above. Remove the “1st” panel and “2nd” panel marked “COIL”.

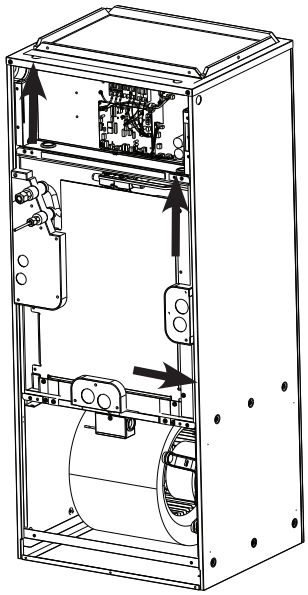

Step. 4b Next, remove the smaller panels covering the drain holes and refrigerant lines by first sliding in the direction indicated above.

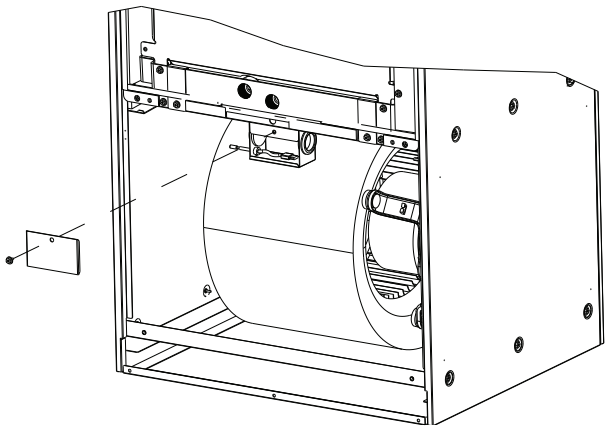

Step.5 Remove the electrical enclosure cover mounted on the fan assembly. Disconnect the motor connector along with the connector for the return air thermistor. Remove all of the harnesses from the electrical enclosure leaving only the return air thermistor attached to the electrical enclosure.

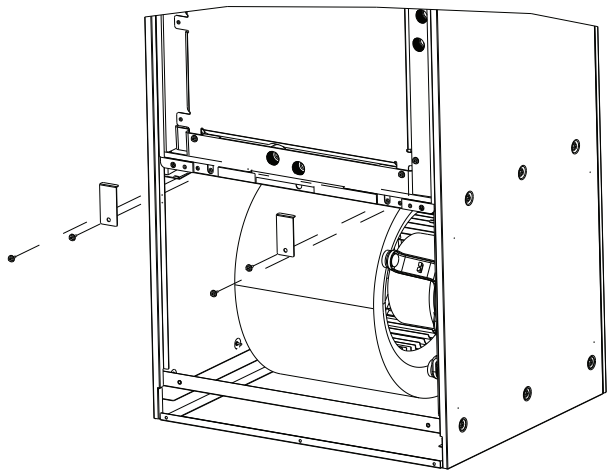

Step. 6 Remove the (4) screws indicated in the image along with the brackets that secure the coil.

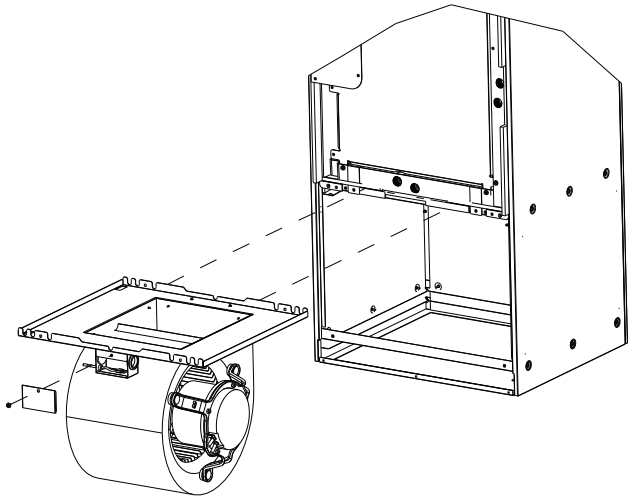

Step. 7 Slide the entire fan assembly out from the cabinet.

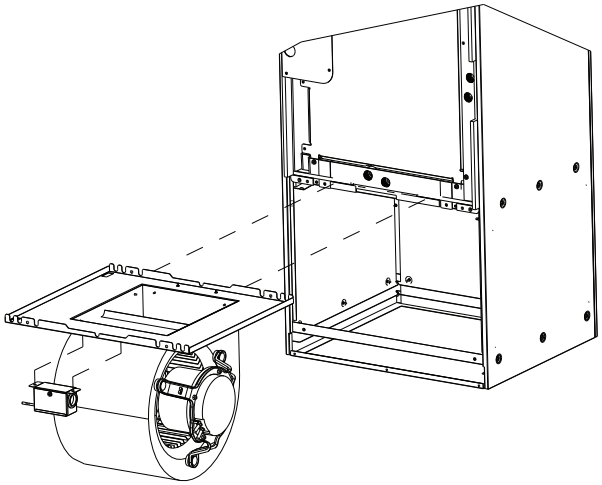

Step.8 Remove the electrical enclosure from the fan assembly.

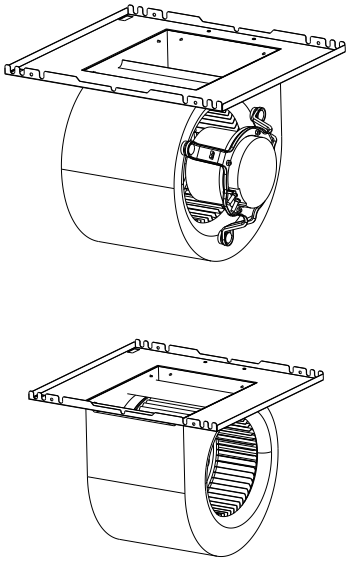

Step.9 Rotate the blower assembly 180°. The motor should now be on the opposite side.

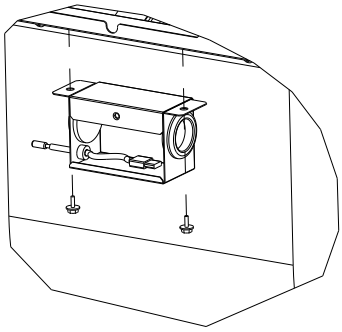

Step.10 Reinstall the enclosure for the return air temperature sensor on the blower assembly on the opposite side from its original location.

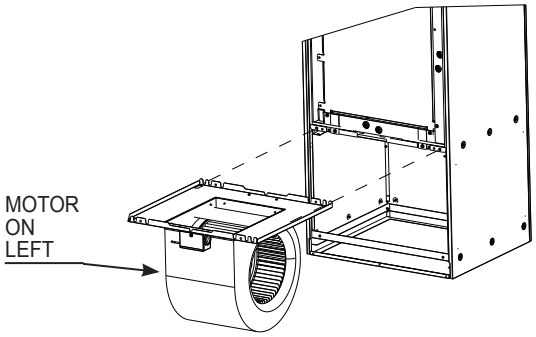

Step.11 Reinsert the blower assembly with the motor now on the left into the air handler cabinet and reuse the (2) screws that secured the fan assembly in position. Reroute the (2) connectors for the motor back into the enclosure and reconnect.
NOTE: The wiring harness might have to be removed from the plastic retainers mounted to the motor bracket in order to have sufficient length to reach the electrical enclosure mounted to the fan assembly. Ensure wiring harness is secure so it cannot be pulled into the fan. Reroute the return air thermistor connector back into the electrical enclosure and reconnect.