14 PARTS LIST (non-RoHS compliant)

MXZ-2A20NA

14-1. OUTDOOR UNIT STRUCTURAL PARTS AND FUNCTIONAL PARTS

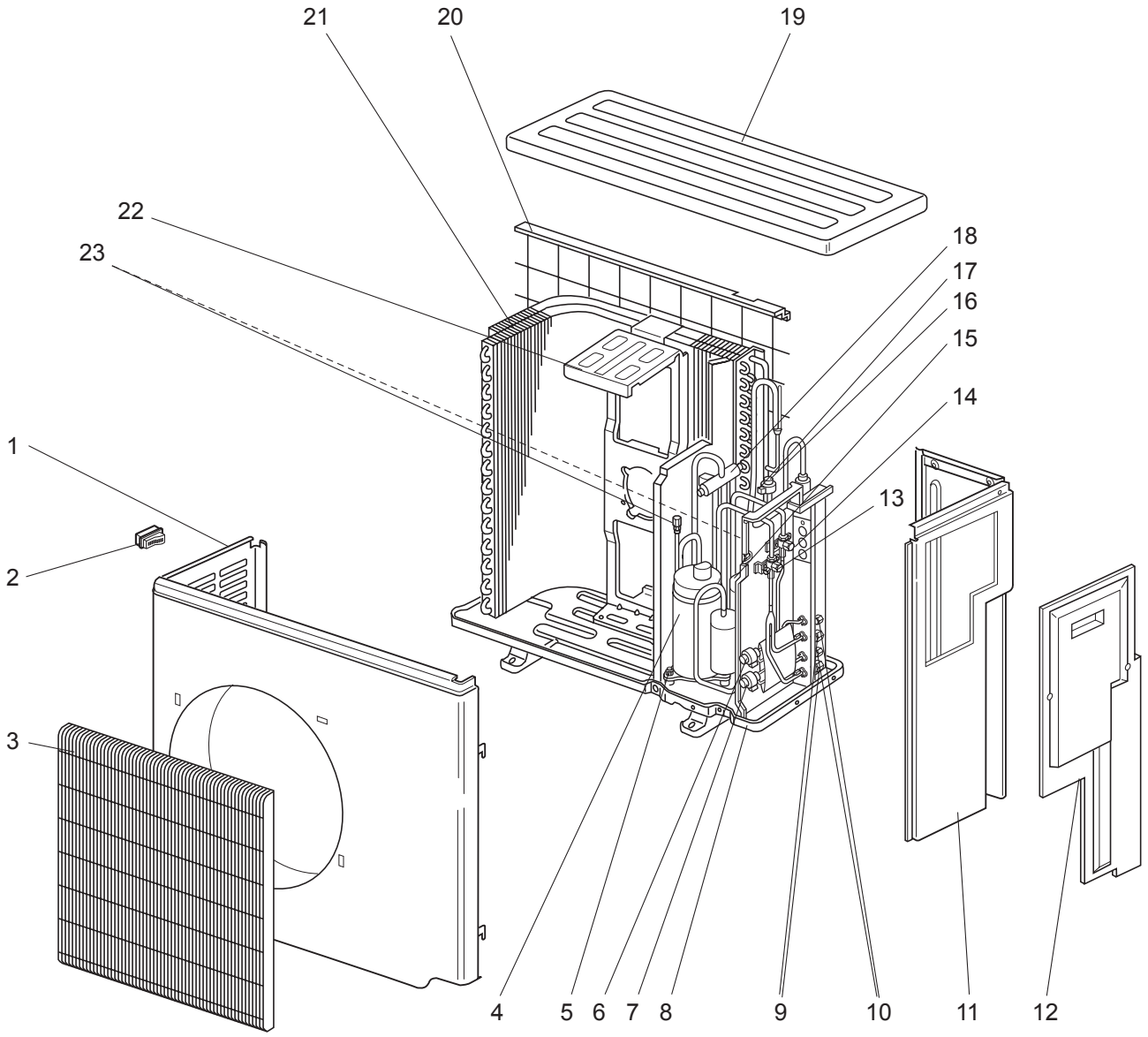

PARTS LIST (non-RoHS compliant)

MXZ-2A20NA

14-1. OUTDOOR UNIT STRUCTURAL PARTS AND FUNCTIONAL PARTS

Part numbers that are circled are not shown in the illustration.

No.	Parts No.	Parts Name	Symbol in Wiring Diagram	Q'ty/unit	Remakes
				MXZ-2A20NA	
1	E02 939 232	CABINET		1	
2	E02 817 009	HANDLE		1	
3	E02 939 521	GRILLE		1	
4	E02 B05 900	COMPRESSOR	MC	1	SNB130FPDH1
5	E02 065 506	COMPRESSOR RUBBER SET		3	3 RUBBERS SET
6	E02 851 640	EXPANSION VALVE		1	B room
	E02 939 493	LEV COIL	LEV B	1	B room
7	E02 851 640	EXPANSION VALVE		1	A room
	E02 938 493	LEV COIL	LEV A	1	A room
8	E02 939 290	BASE		1	
9	E02 939 666	UNION(GAS)		2	ϕ3/8
10	E02 939 667	UNION(LIQUID)		2	ϕ1/4
11	E02 939 233	BACK PANEL		1	
12	E02 939 245	SERVICE PANEL		1	
13	E02 B05 661	BALL VALVE (GAS)		1	ϕ5/8
14	E02 939 662	BALL VALVE (LIQUID)		1	ϕ3/8
15	E02 938 959	POWER RECEIVER		1	
16	E02 819 640	EXPANSION VALVE		1	E
17	E02 819 493	LEV COIL	LEV E	1	
18	E02 A56 961	4-WAY VALVE		1	
19	E02 819 297	TOP PANEL		1	
20	E02 939 523	REAR GUARD		1	
21	E02 B05 630	HEAT EXCHANGER		1	
22	E02 939 515	MOTOR SUPPORT		1	
23	E02 A49 641	SERVICE PORT		2	
㉔	E02 938 937	CAPILLARY TUBE		8	O.D.0.14 x I.D.0.09 x 19.68
㉕	E02 939 936	CAPILLARY TUBE		2	O.D.0.16 x I.D.0.11 x 3.93
㉖	E02 938 936	CAPILLARY TUBE		1	O.D.0.10 x I.D.0.02 x 39.37
㉗	E02 B05 299	OIL SEPARATOR		1	

PARTS LIST (non-RoHS compliant)

MXZ-2A20NA

14-2. OUTDOOR UNIT FUNCTIONAL PARTS AND ELECTRICAL PARTS

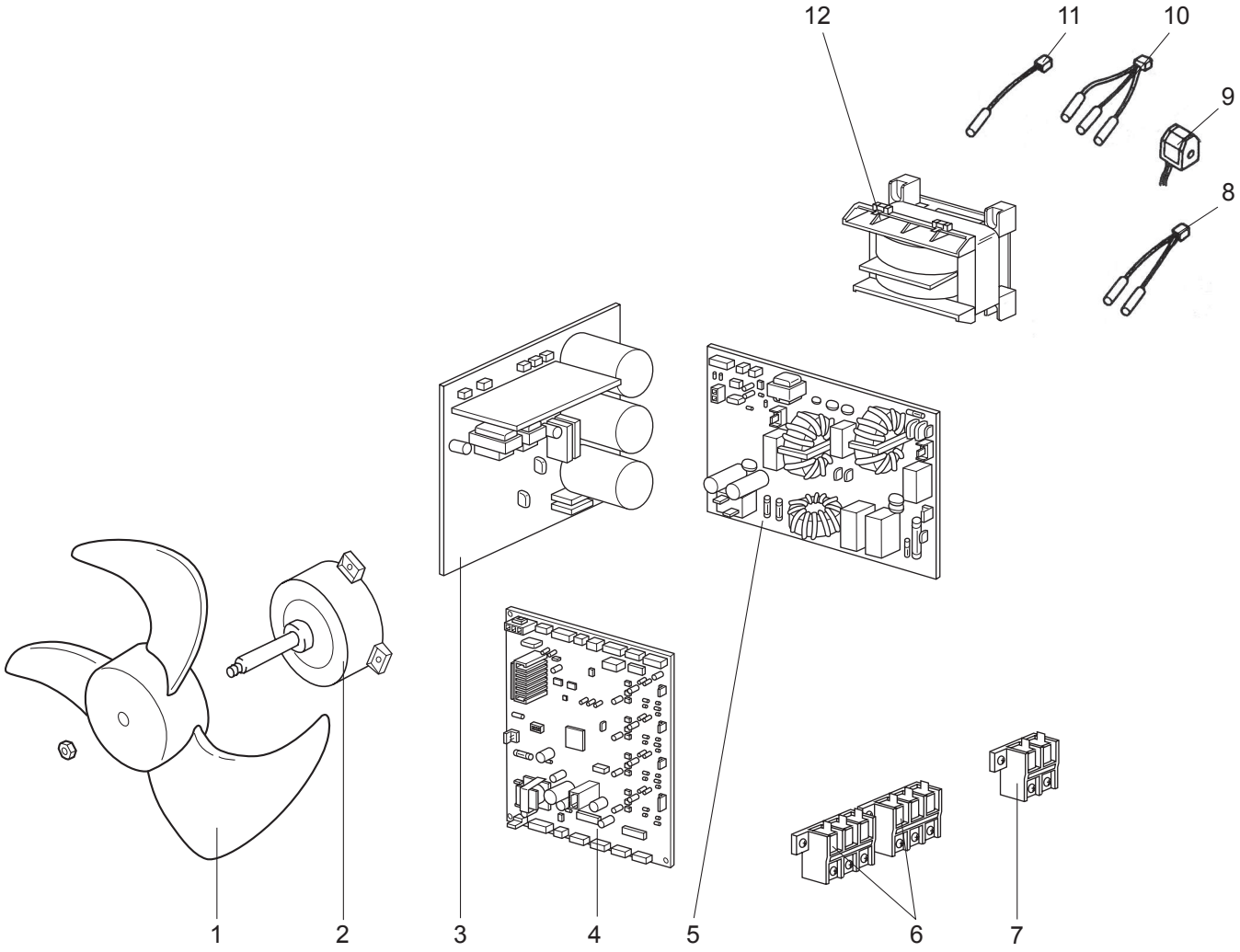

PARTS LIST (non-RoHS compliant)

MXZ-2A20NA
14-2. OUTDOOR UNIT FUNCTIONAL PARTS AND ELECTRICAL PARTS

No.	Parts No.	Parts Name	Symbol in Wiring Diagram	Q'ty/unit	Remakes
				MXZ-2A20NA	
1	E02 851 501	PROPELLER		1	
2	E02 A58 301	OUTDOOR FAN MOTOR	MF	1	RC0J60-□□
3	E02 B05 440	POWER BOARD		1	Including heat sink and RT64
4	E02 B05 450	ELECTRONIC CONTROL P.C. BOARD		1	
5	E02 B05 444	NOISE FILTER P.C. BOARD		1	
6	E02 927 374	TERMINAL BLOCK	TB2,3	2	Indoor unit connecting
7	E02 A53 374	TERMINAL BLOCK	TB1	1	Power supply
8	E02 977 307	GAS PIPE TEMPERATURE THERMISTOR SET	RT6A,B	1	
9	E02 B05 490	R.V. COIL	21S4	1	
10	E02 938 308	THERMISTOR SET	RT61,62,68	1	DEFROST, DISCHARGE OUTDOOR HEAT EXCHANGER
11	E02 938 309	AMBIENT TEMPERATURE THERMISTOR	RT65	1	
12	E02 938 337	REACTOR	L	1	20A 600μH

PARTS LIST (non-RoHS compliant)

MXZ-3A30NA

14-3. OUTDOOR UNIT STRUCTURAL PARTS AND FUNCTIONAL PARTS

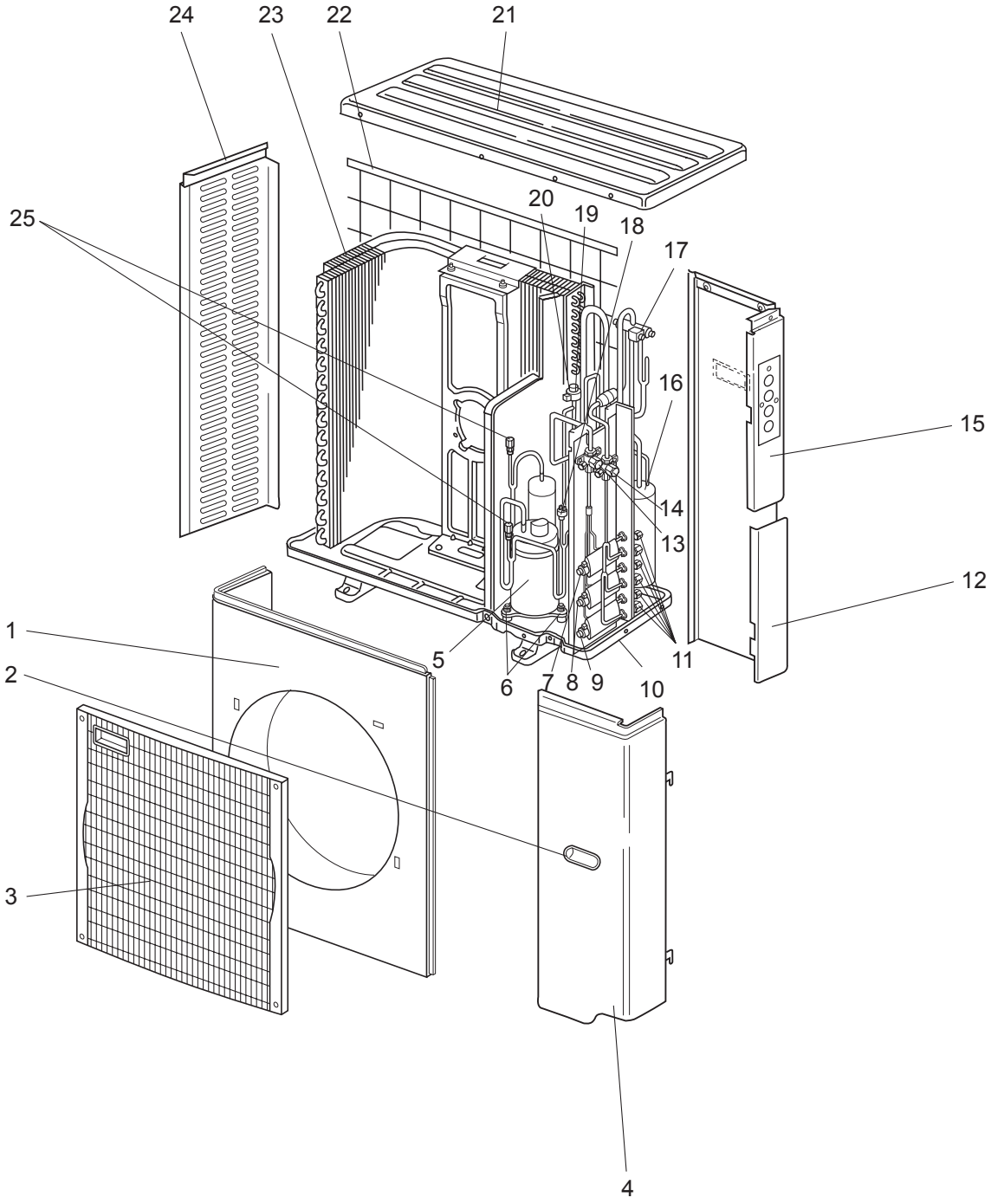

PARTS LIST (non-RoHS compliant)

MXZ-3A30NA

14-3. OUTDOOR UNIT STRUCTURAL PARTS AND FUNCTIONAL PARTS

Part numbers that are circled are not shown in the illustration.

No.	Parts No.	Parts Name	Symbol in Wiring Diagram	Q'ty/unit	Remakes
				MXZ-3A30NA	
1	M21 TK0 232	FRONT PANEL		1	
2	M21 TK0 027	HANDLE ASSEMBLY		2	
3	M21 TK5 010	GRILLE		1	
4	M21 TK0 245	SERVICE PANEL		1	
5	T92 500 801	COMPRESSOR	MC	1	TNB220FMCH
6	T2W TK0 505	COMPRESSOR RUBBER SET		3	3 RUBBERS SET
7	R01 E39 401	EXPANSION VALVE		1	C room
	T2W TK0 653	LEV COIL	LEV C	1	C room
8	R01 E39 401	EXPANSION VALVE		1	B room
	T2W TK0 652	LEV COIL	LEV B	1	B room
9	R01 E39 401	EXPANSION VALVE		1	A room
	T2W TK0 651	LEV COIL	LEV A	1	A room
10	M21 TK0 290	BASE ASSEMBLY		1	
11	M21 42E 644	UNION		1	ϕ1/2, ϕ3/8, ϕ1/4 SET
12	T2W TK0 247	PIPE COVER		1	
13	M21 TK5 667	BALL VALVE (LIQUID) 3/8		1	ϕ3/8
14	T2W J7E 667	BALL VALVE (GAS) 5/8		1	ϕ5/8
15	M21 J7E 248	REAR PANEL		1	
16	T2W TK0 959	POWER RECEIVER		1	
17	T2W J7E 961	4-WAY VALVE		1	
18	M21 NT1 646	HIGH PRESSURE SWITCH	HPS	1	4.8 MPa (48.9 kg/cm^2)
19	T2W WW8 401	EXPANSION VALVE		1	E
20	T2W TK0 651	LEV COIL	LEV E	1	
21	M21 TK0 297	TOP PANEL		1	
22	T2W E40 523	REAR GUARD		1	
23	M21 J7E 630	HEAT EXCHANGER		1	
24	M21 TK0 249	SIDE PANEL		1	
25	M21 J7E 641	SERVICE PORT		2	
26	M21 SJ4 937	CAPILLARY TUBE		2	O.D.0.16 x I.D.0.09 x 15.75
27	M21 TK0 936	CAPILLARY TUBE		3	O.D.0.16 x I.D.0.11 x 3.54
28	T2W E59 936	CAPILLARY TUBE		1	O.D.0.10 x I.D.0.02 x 39.37
29	T2W J7E 656	OIL SEPARATOR		1	

PARTS LIST (non-RoHS compliant)

MXZ-3A30NA

14-4. OUTDOOR UNIT FUNCTIONAL PARTS AND ELECTRICAL PARTS

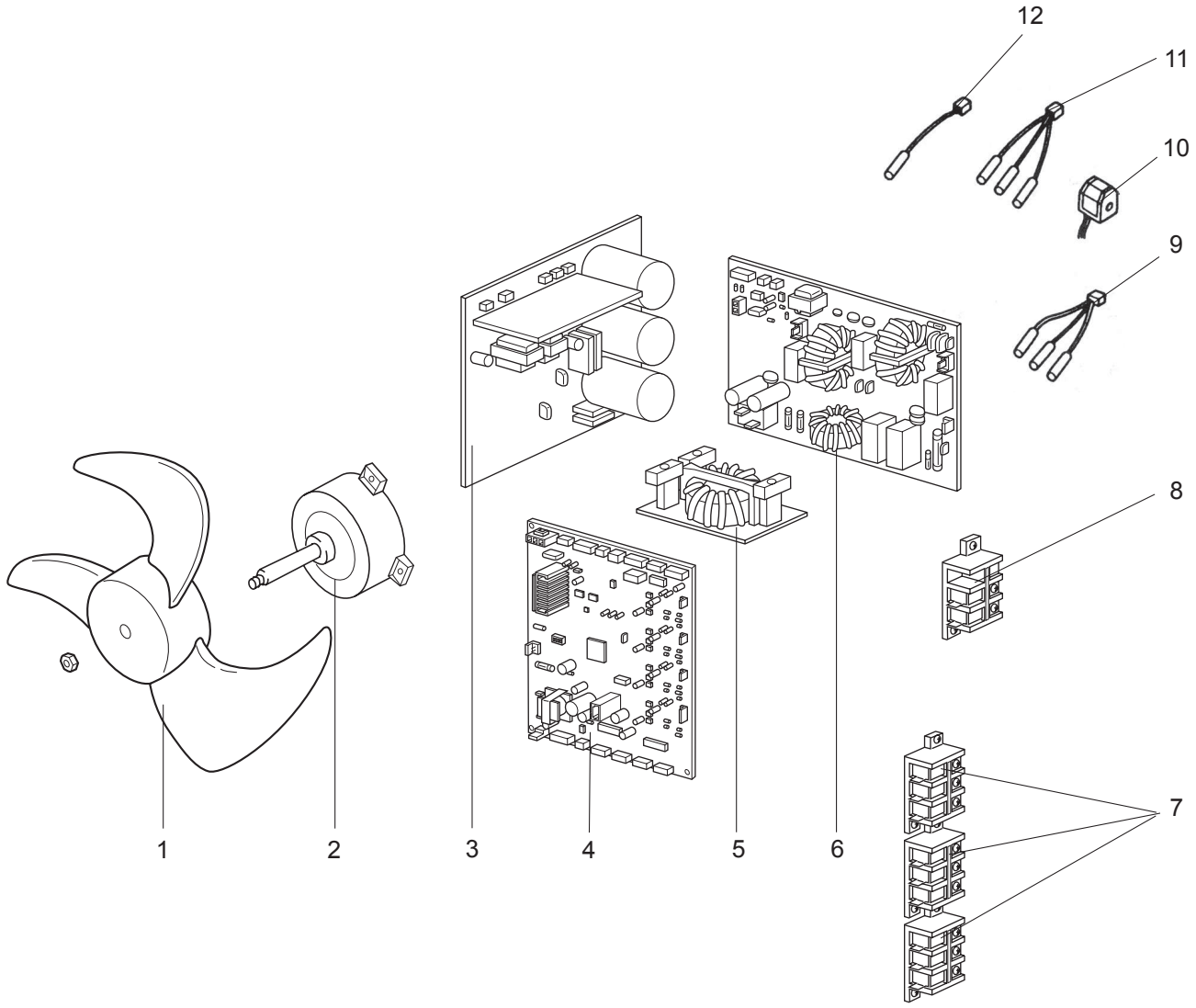

PARTS LIST (non-RoHS compliant)

MXZ-3A30NA
14-4. OUTDOOR UNIT FUNCTIONAL PARTS AND ELECTRICAL PARTS

No.	Parts No.	Parts Name	Symbol in Wiring Diagram	Q'ty/unit	Remakes
				MXZ-3A30NA	
1	M21 TK0 501	PROPELLER		1	
2	T2W J7E 301	OUTDOOR FAN MOTOR	MF	1	RC0J60-□□
3	T2W J7E 440	POWER BOARD		1	Including heat sink and RT64
4	T2W J7E 451	ELECTRONIC CONTROL P.C. BOARD		1	
5	M21 TK0 337	REACTOR	L	1	20 A 600 μH
6	T2W J7E 424	NOISE FILTER P.C. BOARD		1	
7	T2W YH1 376	TERMINAL BLOCK	TB2~4	3	Indoor unit connecting
8	T2W J7E 376	TERMINAL BLOCK	TB1	1	Power supply
9	T2W E88 307	GAS PIPE TEMPERATURE THERMISTOR	RT6A,B,C	1	
10	T2W J7E 398	R.V. COIL	21S4	1	
11	M21 G0H 308	THERMISTOR SET	RT61,62,68	1	DEFROST, DISCHARGE, OUTDOOR HEAT EXCHANGER
12	M21 90V 309	AMBIENT TEMPERATURE THERMISTOR	RT65	1	

15 RoHS PARTS LIST (RoHS compliant)

MXZ-2A20NA MXZ-2A20NA - 1

15-1. OUTDOOR UNIT STRUCTURAL PARTS AND FUNCTIONAL PARTS

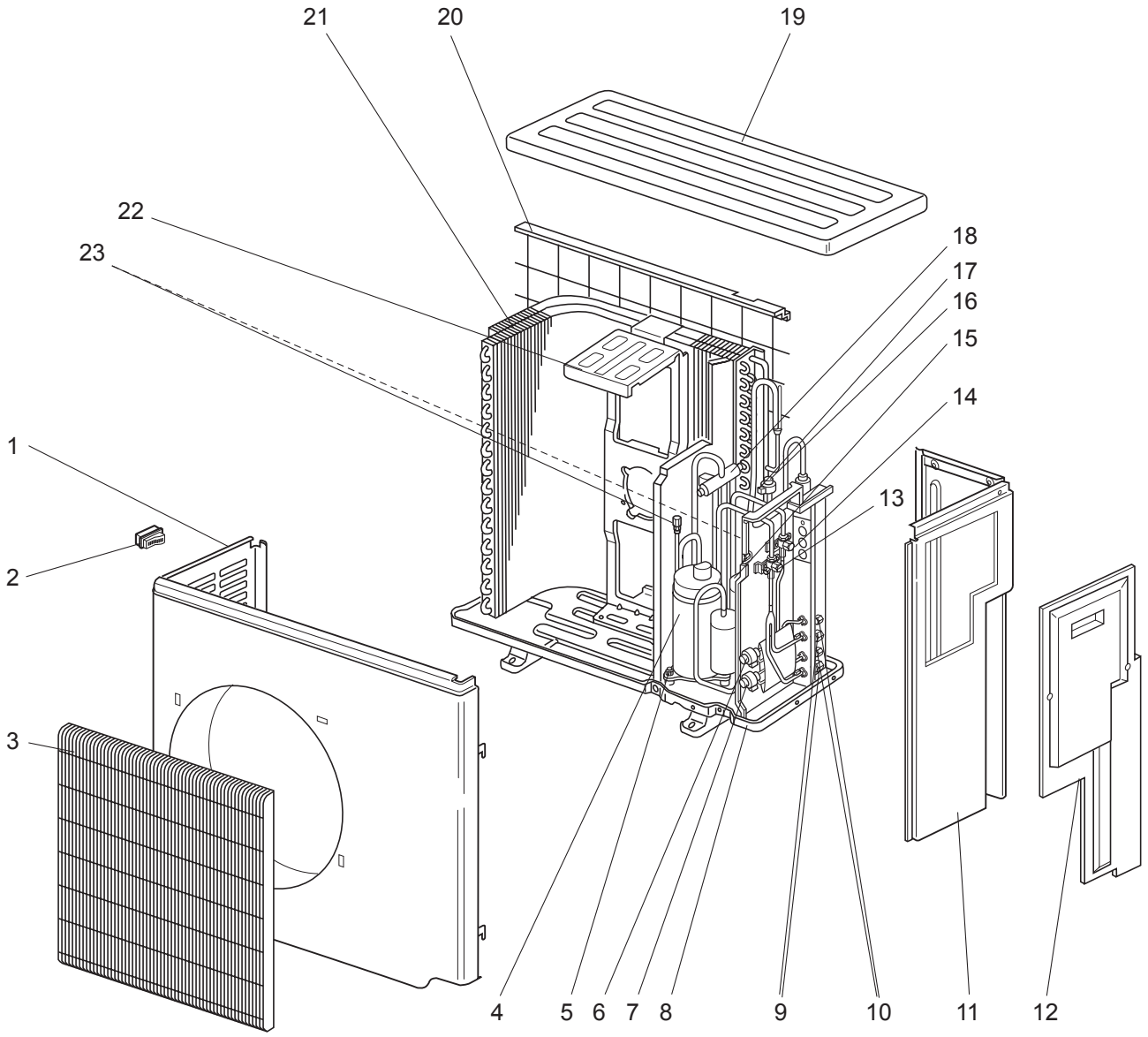

PARTS LIST (RoHS compliant)

MXZ-2A20NA MXZ-2A20NA - 1

15-1. OUTDOOR UNIT STRUCTURAL PARTS AND FUNCTIONAL PARTS

Part numbers that are circled are not shown in the illustration.

No.	RoHS	Parts No.	Parts Name	Symbol in Wiring Diagram	Q'ty/unit		Remakes
					MXZ-2A20NA	MXZ-2A20NA-1	
1	G	E12 939 232	CABINET		1	1	
2	G	E12 817 009	HANDLE		1	1	
3	G	E12 939 521	GRILLE		1	1	
4	G	E12 B05 900	COMPRESSOR	MC	1		SNB130FPDH1
	G	E12 C15 900	COMPRESSOR	MC		1	SNB130FQBH1
5	G	E12 065 506	COMPRESSOR RUBBER SET		3	3	3 RUBBERS SET
6	G	E12 851 640	EXPANSION VALVE		1	1	B room
	G	E12 939 493	LEV COIL	LEV B	1	1	B room
7	G	E12 851 640	EXPANSION VALVE		1	1	A room
	G	E12 938 493	LEV COIL	LEV A	1	1	A room
8	G	E12 939 290	BASE		1	1	
9	G	E12 C06 666	UNION(GAS)		2		ϕ3/8
	G	E12 C18 666	UNION(GAS)			2	ϕ3/8
10	G	E12 C06 667	UNION(LIQUID)		2		ϕ1/4
	G	E12 C18 667	UNION(LIQUID)			2	ϕ1/4
11	G	E12 939 233	BACK PANEL		1	1	
12	G	E12 939 245	SERVICE PANEL		1	1	
13	G	E12 C15 661	BALL VALVE (GAS)		1	1	ϕ5/8
14	G	E12 C06 662	BALL VALVE (LIQUID)		1	1	ϕ3/8
15	G	E12 938 959	POWER RECEIVER		1		
	G	E12 C18 959	POWER RECEIVER			1	
16	G	E12 853 640	EXPANSION VALVE		1	1	E
17	G	E12 819 493	LEV COIL	LEV E	1	1	
18	G	E12 A56 961	4-WAY VALVE		1	1	
19	G	E12 819 297	TOP PANEL		1	1	
20	G	E12 939 523	REAR GUARD		1	1	
21	G	E12 B05 630	HEAT EXCHANGER		1	1	
22	G	E12 939 515	MOTOR SUPPORT		1	1	
23	G	E12 A49 641	SERVICE PORT		2	2	
24	G	E12 938 937	CAPILLARY TUBE		8	8	O.D.0.14 x I.D.0.09 x 19.68
25	G	E12 939 936	CAPILLARY TUBE		2	2	O.D.0.16 x I.D.0.11 x 3.93
26	G	E12 938 936	CAPILLARY TUBE		1	1	O.D.0.10 x I.D.0.02 x 39.37
27	G	E12 B05 299	OIL SEPARATOR		1	1	

RoHS PARTS LIST (RoHS compliant)

MXZ-2A20NA MXZ-2A20NA - 1

15-2. OUTDOOR UNIT FUNCTIONAL PARTS AND ELECTRICAL PARTS

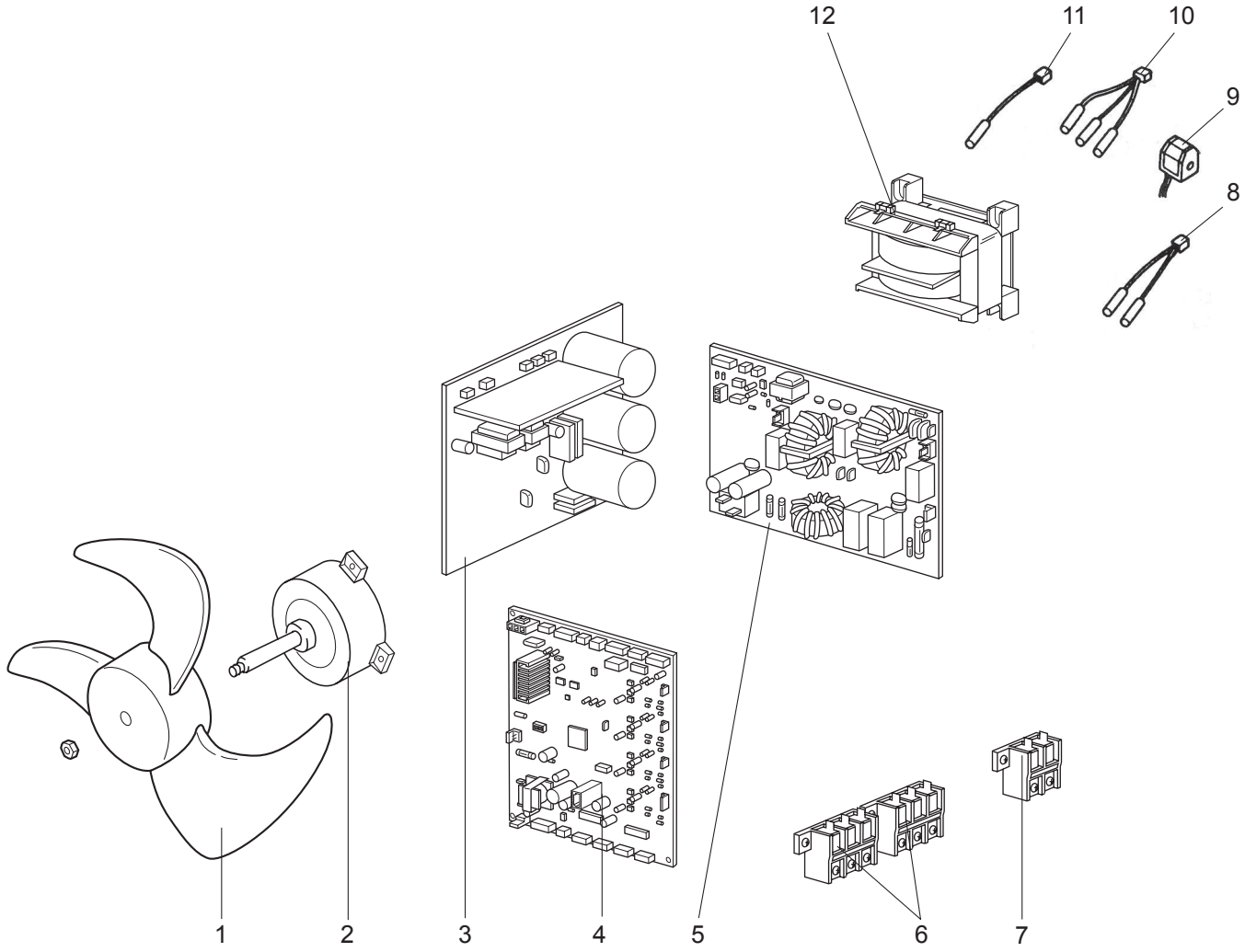

PARTS LIST (RoHS compliant)

MXZ-2A20NA MXZ-2A20NA - 1

15-2. OUTDOOR UNIT FUNCTIONAL PARTS AND ELECTRICAL PARTS

No.	RoHS	Parts No.	Parts Name	Symbol in Wiring Diagram	Q'ty/unit		Remakes
					MXZ-2A20NA	MXZ-2A20NA-1	
1	G	E12 851 501	PROPELLER		1	1	
2	G	E12 A58 301	OUTDOOR FAN MOTOR	MF	1	1	RC0J60-□□
3	G	E12 B05 440	POWER BOARD		1		Including heat sink and RT64
	G	E12 C15 440	POWER BOARD			1	Including heat sink and RT64
4	G	E12 B05 450	ELECTRONIC CONTROL P.C. BOARD		1		
	G	E12 C15 450	ELECTRONIC CONTROL P.C. BOARD			1	
5	G	E12 B05 444	NOISE FILTER P.C. BOARD		1	1	
6	G	E12 927 374	TERMINAL BLOCK	TB2,3	2	2	Indoor unit connecting
7	G	E12 A53 374	TERMINAL BLOCK	TB1	1	1	Power supply
8	G	E12 977 307	GAS PIPE TEMPERATURE THERMISTOR SET	RT6A,B	1		
9	G	E12 B05 490	R.V. COIL	21S4	1	1	
10	G	E12 938 308	THERMISTOR SET	RT61,62,68	1	1	DEFROST, DISCHARGE OUTDOOR HEAT EXCHANGER
11	G	E12 938 309	AMBIENT TEMPERATURE THERMISTOR	RT65	1	1	
12	G	E12 938 337	REACTOR	L	1	1	20 A 600 μH

RoHS PARTS LIST (RoHS compliant)

MXZ-2A20NA - 2

15-3. OUTDOOR UNIT STRUCTURAL PARTS AND FUNCTIONAL PARTS

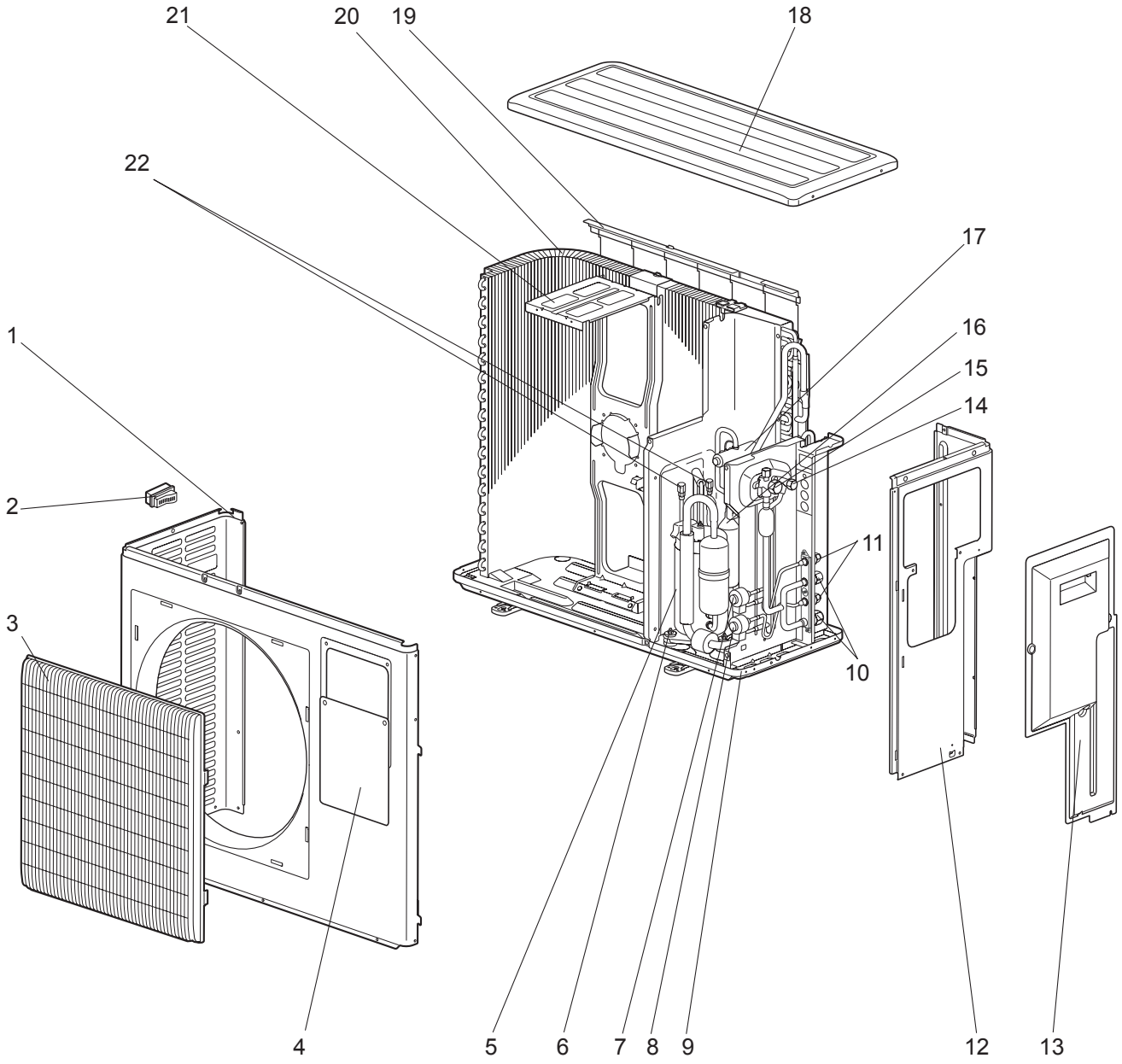

PARTS LIST (RoHS compliant)

MXZ-2A20NA - 2

15-3. OUTDOOR UNIT STRUCTURAL PARTS AND FUNCTIONAL PARTS

Part numbers that are circled are not shown in the illustration.

No.	RoHS	Parts No.	Parts Name	Symbol in Wiring Diagram	Q'ty/unit	Remakes
					MXZ-2A20NA-2	
1	G	E12 D36 232	CABINET		1	
2	G	E12 817 009	HANDLE		1	
3	G	E12 939 521	GRILLE		1	
4	G	E12 D36 246	SUB PANEL		1	
5	G	E12 C15 900	COMPRESSOR	MC	1	SNB130FQBH1
6	G	E12 C34 506	COMPRESSOR RUBBER SET		3	3 RUBBERS SET
7	G	E12 851 640	EXPANSION VALVE		1	B room
	G	E12 939 493	LEV COIL	LEV B	1	B room
8	G	E12 851 640	EXPANSION VALVE		1	A room
	G	E12 938 493	LEV COIL	LEV A	1	A room
9	G	E12 939 290	BASE		1	
10	G	E12 D36 666	UNION(GAS)		2	ϕ3/8
11	G	E12 D36 667	UNION(LIQUID)		2	ϕ1/4
12	G	E12 939 233	BACK PANEL		1	
13	G	E12 D36 245	SERVICE PANEL		1	
14	G	E12 D36 662	STOP VALVE (LIQUID) 3/8		1	ϕ3/8
15	G	E12 C88 661	STOP VALVE (GAS) 5/8		1	ϕ5/8
16	G	E12 C88 299	OIL SEPARATOR		1	
17	G	E12 A56 961	4-WAY VALVE		1	
18	G	E12 819 297	TOP PANEL		1	
19	G	E12 939 523	REAR GUARD		1	
20	G	E12 B05 630	OUTDOOR HEAT EXCHANGER		1	
21	G	E12 939 515	MOTOR SUPPORT		1	
22	G	E12 A49 641	SERVICE PORT		2	
23	G	E12 938 937	CAPILLARY TUBE		8	O.D.0.14 x I.D.0.09 x 19.68
24	G	E12 939 936	CAPILLARY TUBE		2	O.D.0.16 x I.D.0.11 x 3.93
25	G	E12 938 936	CAPILLARY TUBE		1	O.D.0.10 x I.D.0.02 x 39.37
26	G	E12 C18 959	POWER RECEIVER		1	
27	G	E12 853 640	EXPANSION VALVE		1	
	G	E12 819 493	LEV COIL	LEV E	1	E

RoHS PARTS LIST (RoHS compliant)

MXZ-2A20NA - 2

15-4. OUTDOOR UNIT FUNCTIONAL PARTS AND ELECTRICAL PARTS

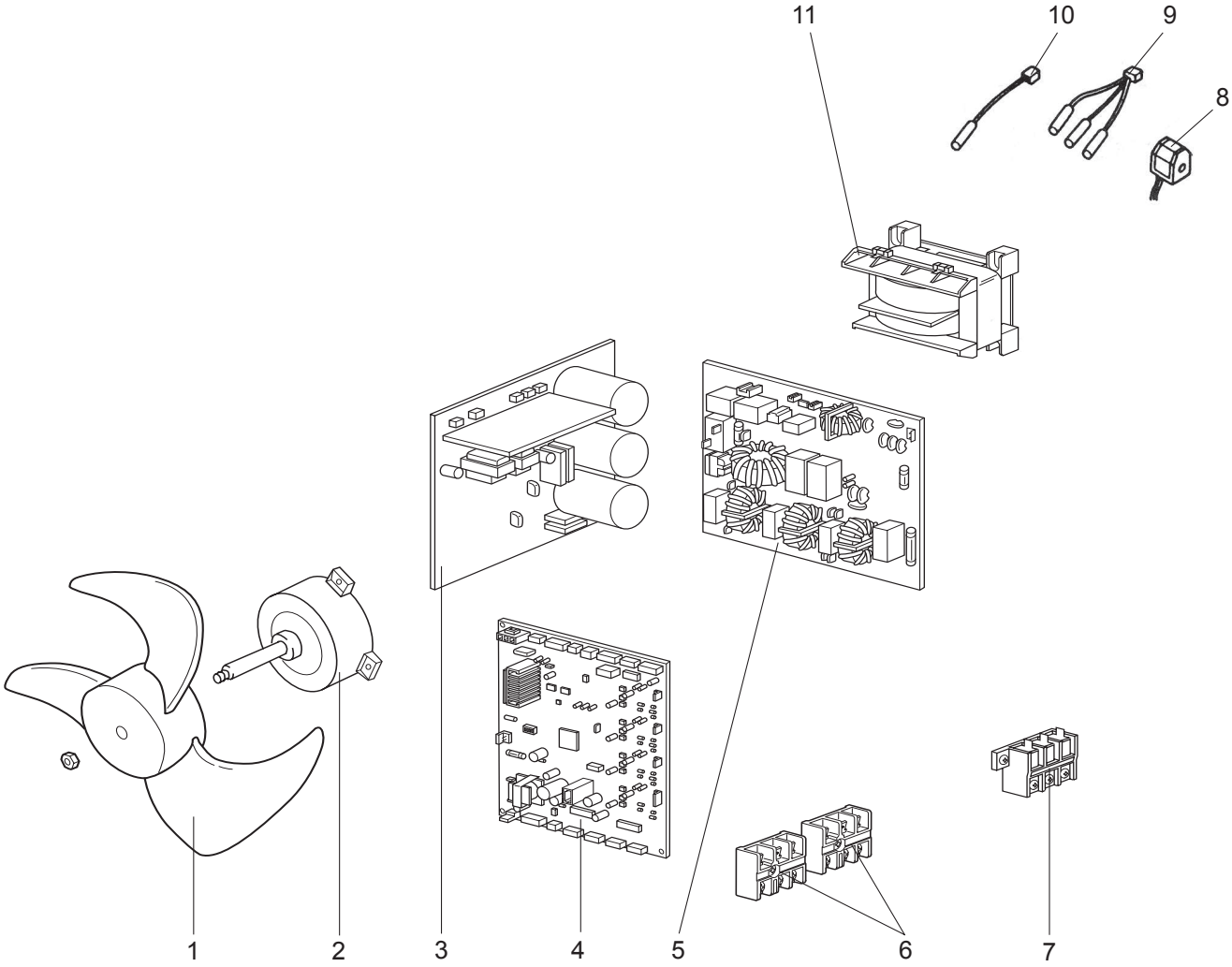

PARTS LIST (RoHS compliant)

MXZ-2A20NA - 2

15-4. OUTDOOR UNIT FUNCTIONAL PARTS AND ELECTRICAL PARTS

No.	RoHS	Parts No.	Parts Name	Symbol in Wiring Diagram	Q'ty/unit	Remakes
					MXZ-2A20NA-2	
1	G	E12 851 501	PROPELLER		1	
2	G	E12 A58 301	OUTDOOR FAN MOTOR	MF	1	RC0J60-□□
3	G	E12 C15 440	POWER BOARD		1	Including heat sink and RT64
4	G	E12 C88 450	ELECTRONIC CONTROL P.C. BOARD		1	
5	G	E12 D38 444	NOISE FILTER P.C. BOARD		1	
6	G	E12 C92 375	TERMINAL BLOCK	TB2~3	2	Indoor unit connecting
7	G	E12 A53 374	TERMINAL BLOCK	TB1	1	Power supply
8	G	E12 B05 490	R.V. COIL	21S4	1	
9	G	E12 938 308	THERMISTOR SET	RT61,62,68	1	DEFROST, DISCHARGE OUTDOOR HEAT EXCHANGER
10	G	E12 938 309	AMBIENT TEMPERATURE THERMISTOR	RT65	1	
11	G	E12 938 337	REACTOR	L	1	20 A 600 μH

RoHS PARTS LIST (RoHS compliant)

MXZ-3A30NA

15-5. OUTDOOR UNIT STRUCTURAL PARTS AND FUNCTIONAL PARTS

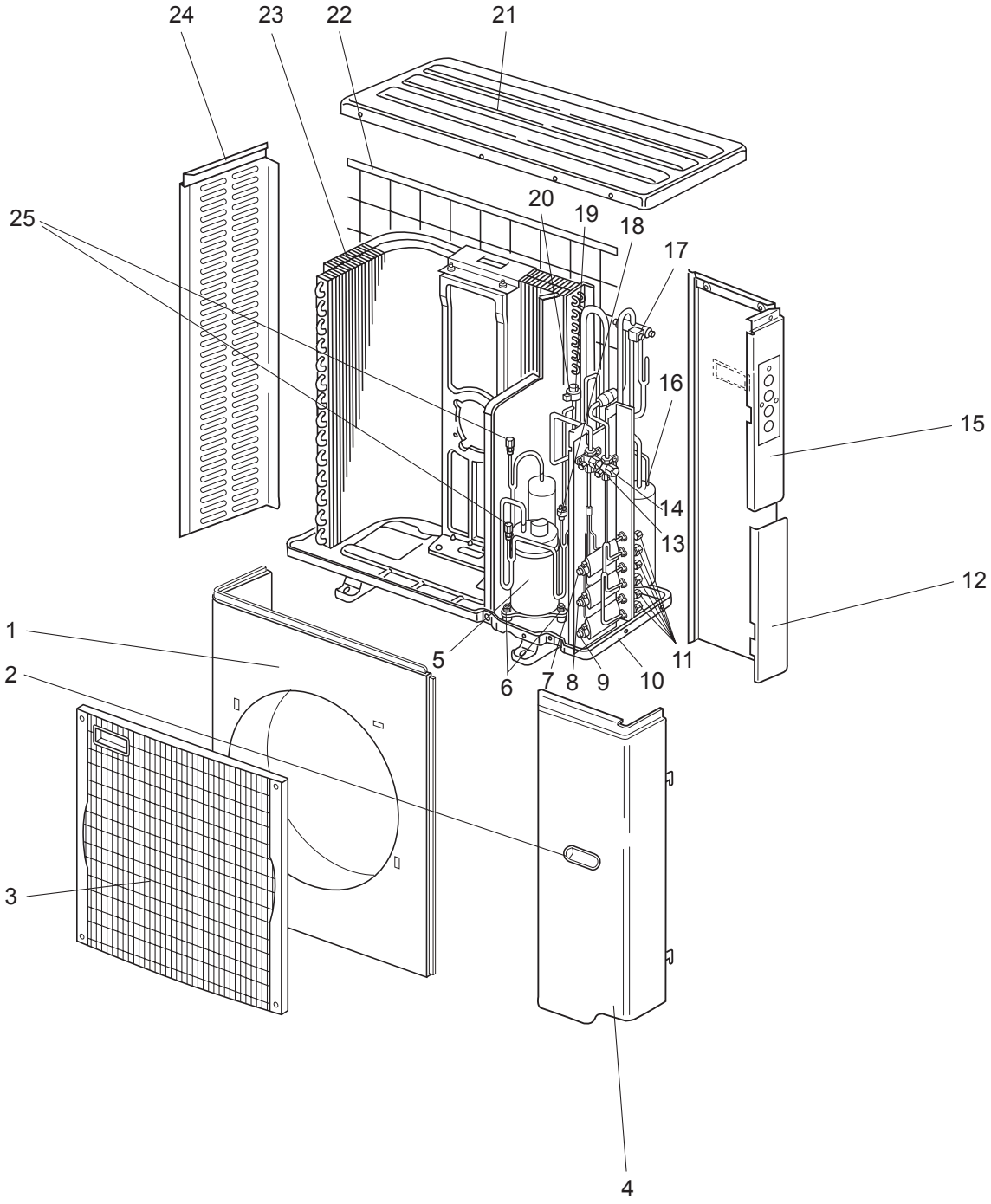

PARTS LIST (RoHS compliant)

MXZ-3A30NA
15-5. OUTDOOR UNIT STRUCTURAL PARTS AND FUNCTIONAL PARTS

Part numbers that are circled are not shown in the illustration.

No.	RoHS	Parts No.	Parts Name	Symbol in Wiring Diagram	Q'ty/unit	Remakes
					MXZ-3A30NA	
1	G	M21 L2V 232	FRONT PANEL		1	
2	G	M21 L2V 027	HANDLE ASSEMBLY		2	
3	G	M21 L2V 010	GRILLE		1	
4	G	M21 L2V 245	SERVICE PANEL		1	
5	G	T92 505 801	COMPRESSOR	MC	1	TNB220FMCH
6	G	M21 L2V 505	COMPRESSOR RUBBER SET		3	3 RUBBERS SET
7	G	M21 L2V 401	EXPANSION VALVE		1	C room
	G	M21 L2V 653	LEV COIL	LEV C	1	C room
8	G	M21 L2V 401	EXPANSION VALVE		1	B room
	G	M21 L2V 652	LEV COIL	LEV B	1	B room
9	G	M21 L2V 401	EXPANSION VALVE		1	A room
	G	M21 L2V 651	LEV COIL	LEV A	1	A room
10	G	M21 L2V 290	BASE ASSEMBLY		1	
11	G	M21 L2V 644	UNION		1	ϕ1/2, ϕ3/8, ϕ1/4 SET
12	G	M21 L2V 247	PIPE COVER		1	
13	G	M21 L2V 667	BALL VALVE (LIQUID) 3/8		1	ϕ3/8
14	G	T2W L7V 668	BALL VALVE (GAS) 5/8		1	ϕ5/8
15	G	T2W L7V 248	REAR PANEL		1	
16	G	T2W L7V 959	POWER RECEIVER		1	
17	G	T2W L7V 642	4-WAY VALVE		1	
18	G	M21 L2V 646	HIGH PRESSURE SWITCH	HPS	1	4.8 MPa (48.9 kg/cm^2)
19	G	M21 L2V 402	EXPANSION VALVE		1	E
20	G	M21 L2V 651	LEV COIL	LEV E	1	
21	G	M21 L2V 297	TOP PANEL		1	
22	G	M21 L2V 523	REAR GUARD		1	
23	G	T2W L7V 630	HEAT EXCHANGER		1	
24	G	M21 L2V 249	SIDE PANEL		1	
25	G	T2W L7V 641	SERVICE PORT		2	
26	G	M21 L2V 937	CAPILLARY TUBE		2	O.D.0.16 x I.D.0.09 x 15.75
27	G	M21 L2V 936	CAPILLARY TUBE		3	O.D.0.16 x I.D.0.11 x 3.54
28	G	M21 L2V 938	CAPILLARY TUBE		1	O.D.0.10 x I.D.0.02 x 39.37
29	G	T2W L7V 656	OIL SEPARATOR		1	

RoHS PARTS LIST (RoHS compliant)

MXZ-3A30NA

15-6. OUTDOOR UNIT FUNCTIONAL PARTS AND ELECTRICAL PARTS

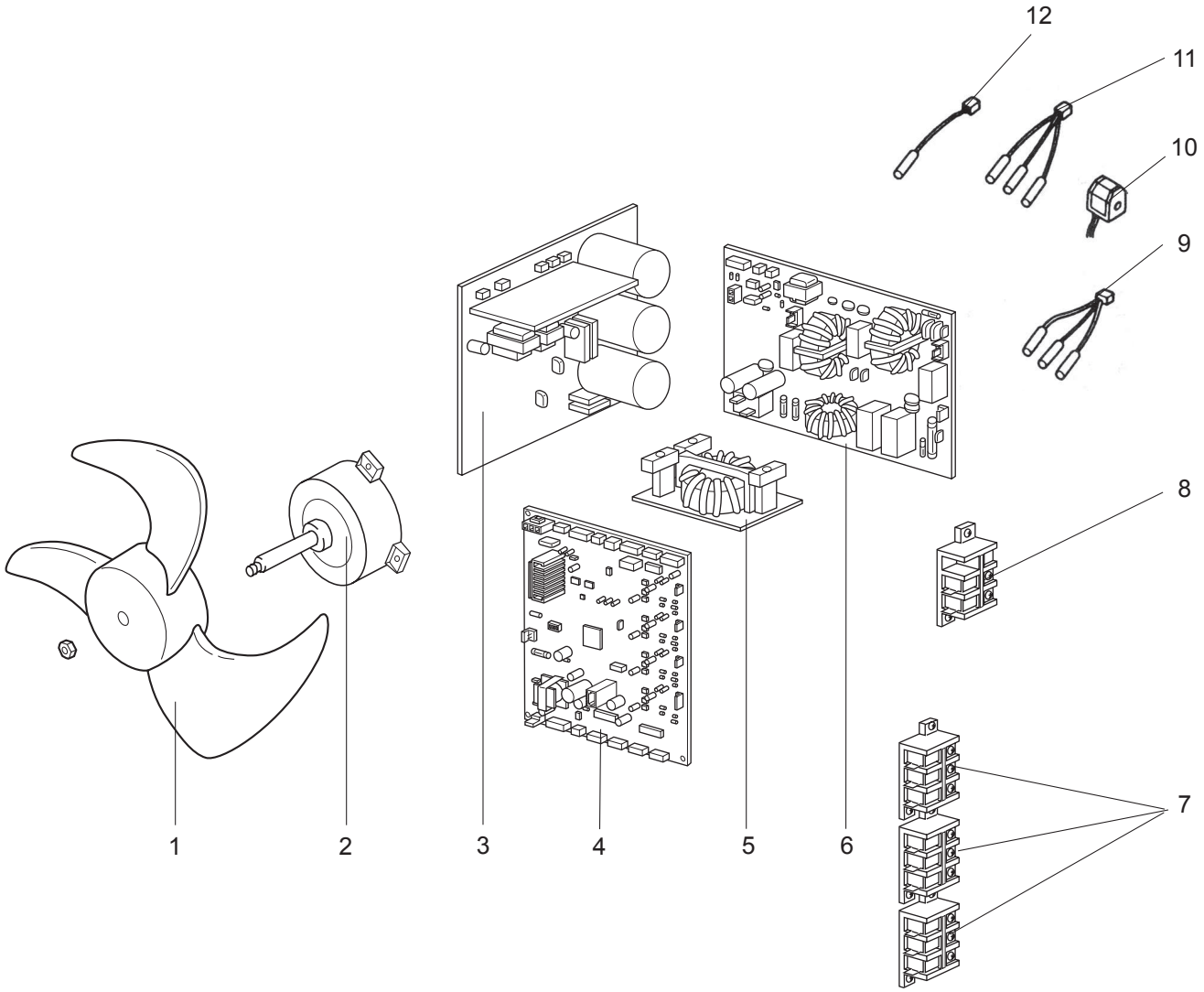

PARTS LIST (RoHS compliant)

MXZ-3A30NA
15-6. OUTDOOR UNIT FUNCTIONAL PARTS AND ELECTRICAL PARTS

No.	RoHS	Parts No.	Parts Name	Symbol in Wiring Diagram	Q'ty/unit	Remakes
					MXZ-3A30NA	
1	G	M21 L2V 501	PROPELLER		1	
2	G	T2W L7V 301	OUTDOOR FAN MOTOR	MF	1	RC0J60-□□
3	G	T2W L7V 440	POWER BOARD		1	Including heat sink and RT64
4	G	T2W L7V 451	ELECTRONIC CONTROL P.C. BOARD		1	
5	G	M21 L2V 337	REACTOR	L	1	20 A 600 μH
6	G	T2W L7V 424	NOISE FILTER P.C. BOARD		1	
7	G	T2W L2V 376	TERMINAL BLOCK	TB2~4	3	Indoor unit connecting
8	G	T2W L7V 377	TERMINAL BLOCK	TB1	1	Power supply
9	G	M21 L7V 307	GAS PIPE TEMPERATURE THERMISTOR	RT6A,B,C	1	
10	G	T2W L7V 398	R.V. COIL	21S4	1	
11	G	M21 L2V 308	THERMISTOR SET	RT61,62,68	1	DEFROST, DISCHARGE, OUTDOOR HEAT EXCHANGER
12	G	M21 L2V 309	AMBIENT TEMPERATURE THERMISTOR	RT65	1	

RoHS PARTS LIST (RoHS compliant)

MXZ-3A30NA - 1 MXZ-4A36NA

15-7. OUTDOOR UNIT STRUCTURAL PARTS AND FUNCTIONAL PARTS

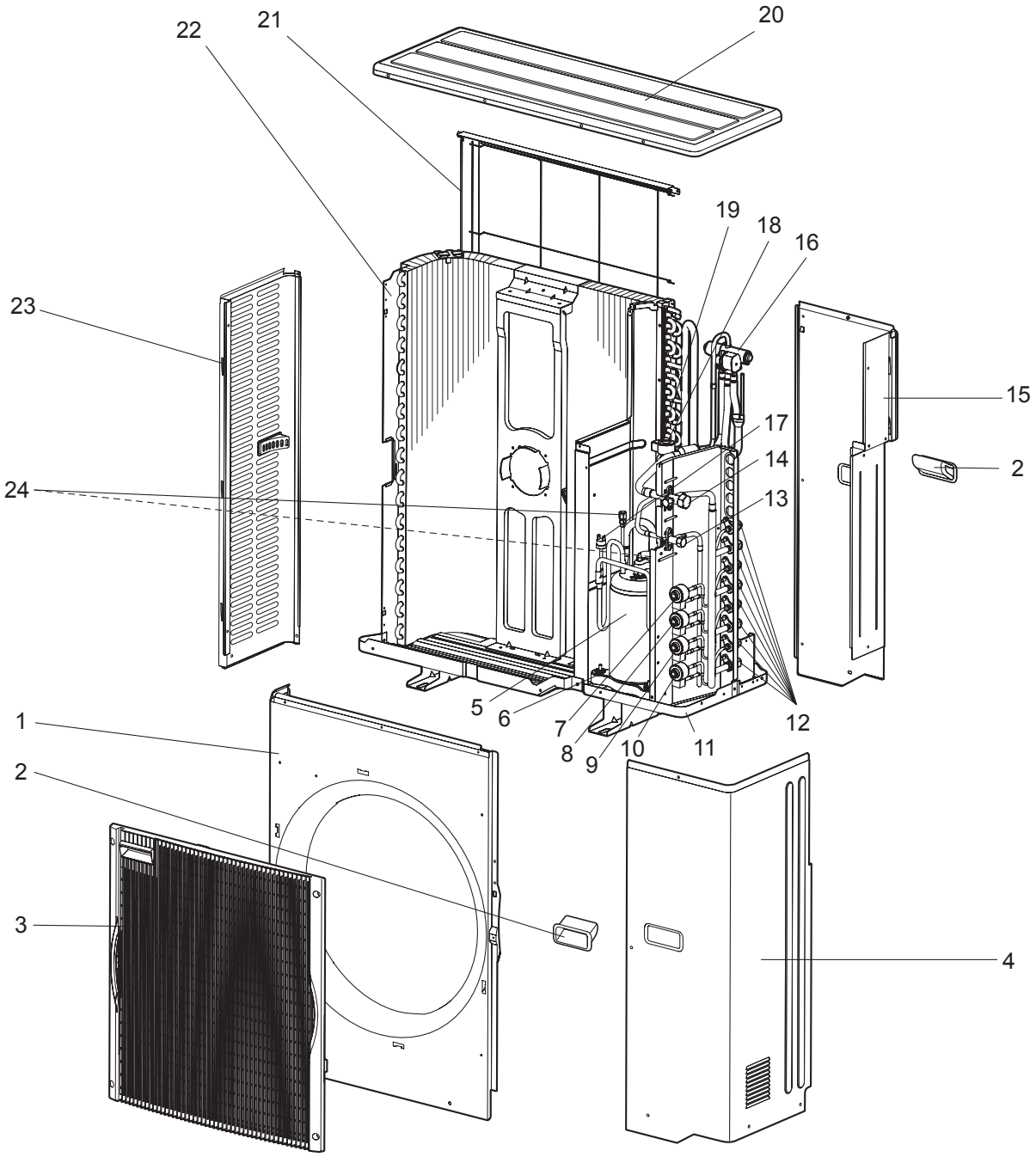

RoHS PARTS LIST (RoHS compliant)

MXZ-3A30NA - 1 MXZ-4A36NA

15-7. OUTDOOR UNIT STRUCTURAL PARTS AND FUNCTIONAL PARTS

Part numbers that are circled are not shown in the illustration.

No.	RoHS	Parts No.	Parts Name	Symbol in Wiring Diagram	Q'ty/unit		Remakes
					MXZ-3A30NA-1	MXZ-4A36NA	
1	G	M21 0A2 232	FRONT PANEL		1	1	
2	G	M21 0A2 027	HANDLE ASSEMBLY		2	2	
3	G	M21 L2V 010	GRILLE		1	1	
4	G	M21 0A2 245	SERVICE PANEL		1	1	
5	G	T92 505 801	COMPRESSOR	MC	1	1	TNB220FMCH
6	G	M21 L2V 505	COMPRESSOR RUBBER SET		3	3	3 RUBBERS SET
7	G	M21 L2V 401	EXPANSION VALVE			1	D room
	G	M21 L2V 654	LEV COIL	LEV D		1	D room
8	G	M21 L2V 401	EXPANSION VALVE		1	1	C room
	G	M21 L2V 653	LEV COIL	LEV C	1	1	C room
9	G	M21 L2V 401	EXPANSION VALVE		1	1	B room
	G	M21 L2V 652	LEV COIL	LEV B	1	1	B room
10	G	M21 L2V 401	EXPANSION VALVE		1	1	A room
	G	M21 L2V 651	LEV COIL	LEV A	1	1	A room
11	G	M21 0A2 290	BASE ASSEMBLY		1	1	
12	G	M21 0A2 644	UNION		1	1	ϕ1/2, ϕ3/8, ϕ1/4 SET
13	G	M21 0A2 668	STOP VALVE (LIQUID) 3/8		1	1	ϕ3/8
14	G	M21 0A6 667	STOP VALVE (GAS) 5/8		1	1	ϕ5/8
15	G	M21 0A2 248	REAR PANEL		1	1	
16	G	T2W L7V 642	4-WAY VALVE		1	1	
17	G	M21 L2V 646	HIGH PRESSURE SWITCH	HPS	1	1	4.8 MPa (48.9 kg/cm^2)
18	G	M21 L2V 402	EXPANSION VALVE		1		F
	G	M21 0A2 402	EXPANSION VALVE			1	F
19	G	M21 0A2 652	LEV COIL	LEV F	1	1	
20	G	M21 L2V 297	TOP PANEL		1	1	
21	G	M21 0A2 523	REAR GUARD		1	1	
22	G	T2W 0A6 630	HEAT EXCHANGER		1		
	G	T2W 0A2 630	HEAT EXCHANGER			1	
23	G	M21 L2V 249	SIDE PANEL		1	1	
24	G	T2W L7V 641	SERVICE PORT		2	2	
25	G	T2W L7V 959	POWER RECEIVER		1	1	
26	G	M21 0A2 937	CAPILLARY TUBE		2	2	O.D.0.12 x I.D.0.08 x 11.8
27	G	M21 0A2 936	CAPILLARY TUBE		3	4	O.D.0.16 x I.D.0.11 x 3.94
28	G	M21 L2V 938	CAPILLARY TUBE		1	1	O.D.0.10 x I.D.0.02 x 39.37
29	G	T2W L7V 656	OIL SEPARATOR		1	1	

RoHS PARTS LIST (RoHS compliant)

MXZ-3A30NA - 1 MXZ-4A36NA

15-8. OUTDOOR UNIT FUNCTIONAL PARTS AND ELECTRICAL PARTS

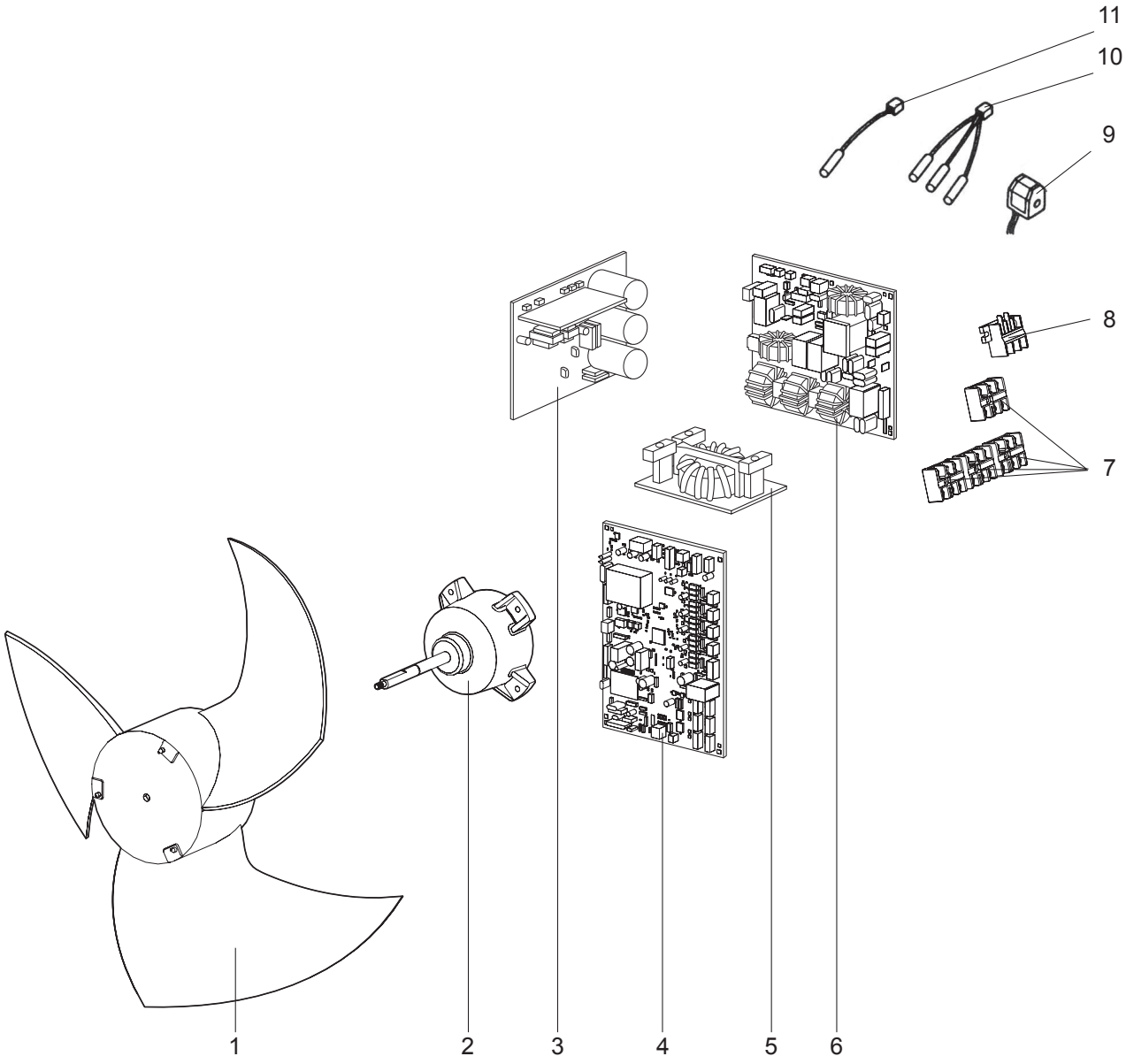

RoHS PARTS LIST (RoHS compliant)

MXZ-3A30NA - 1 MXZ-4A36NA

15-8. OUTDOOR UNIT FUNCTIONAL PARTS AND ELECTRICAL PARTS

No.	RoHS	Parts No.	Parts Name	Symbol in Wiring Diagram	Q'ty/unit		Remakes
					MXZ-3A30NA-1	MXZ-4A36NA	
1	G	M21 L2V 501	PROPELLER		1	1	
2	G	T2W L7V 301	OUTDOOR FAN MOTOR	MF	1	1	PM8H60-□□
3	G	M21 0A1 440	POWER BOARD		1	1	Including heat sink and RT64
4	G	T2W 0A6 451	ELECTRONIC CONTROL P.C. BOARD		1		
	G	T2W 2G6 451	ELECTRONIC CONTROL P.C. BOARD			1	
5	G	M21 L2V 337	REACTOR	L	1	1	20 A 600 μH
6	G	M21 0A0 424	NOISE FILTER P.C. BOARD		1	1	
7	G	T2W 0A2 376	TERMINAL BLOCK	TB2~5	3	4	Indoor unit connecting
8	G	T2W L7V 377	TERMINAL BLOCK	TB1	1	1	Power supply
9	G	T2W L7V 398	R.V. COIL	21S4	1	1	
10	G	M21 L2V 308	THERMISTOR SET	RT61,62,68	1	1	DEFROST, DISCHARGE, OUTDOOR HEAT EXCHANGER
11	G	M21 0A2 309	AMBIENT TEMPERATURE THERMISTOR	RT65	1	1	

16 OPTIONAL PARTS

16-1. DIFFERENT-DIAMETER PIPE

Unit : inch

MXZ-2A20NA MXZ-2A20NA - 1 MXZ-2A20NA - 2 MXZ-3A30NA MXZ-3A30NA - 1 MXZ-4A36NA	Model name	Connected pipes diameter	Diameter A	Diameter B	Length C
For different-diameter pipes	MAC-A454JP	ϕ3/8 — ϕ 1/2	ϕ3/8	ϕ1/2	2.72
	MAC-A455JP	ϕ1/2 — ϕ 3/8	ϕ1/2	ϕ3/8	2.56
	MAC-A456JP	ϕ1/2 — ϕ 5/8	ϕ1/2	ϕ5/8	2.62
	PAC-493PI	ϕ1/4 — ϕ 3/8	ϕ1/4	ϕ3/8	2.38
	PAC-SG76RJ-E	ϕ3/8 — ϕ 5/8	ϕ3/8	ϕ5/8	4

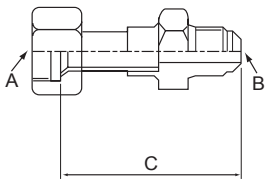

16-2. OUTLET GUIDE

Changes air discharge direction.

Unit : inch

Applied unit	Model name	Model code
MXZ-2A20NA MXZ-2A20NA - 1 MXZ-2A20NA - 2	MAC-889SG	506-889
MXZ-3A30NA MXZ-3A30NA - 1 MXZ-4A36NA	MAC-856SG	51H-856

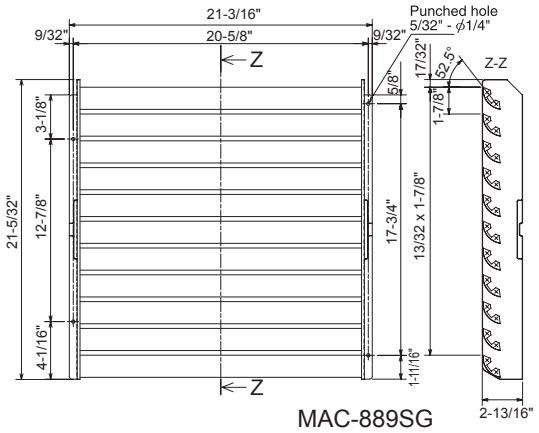

MAC-889SG

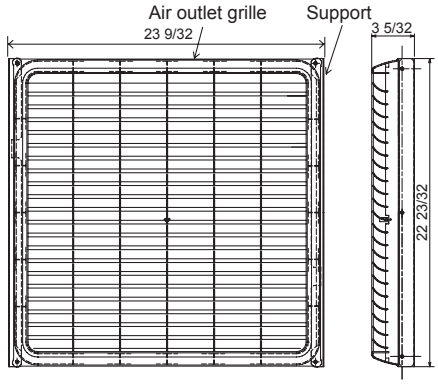

MAC-856SG

Mr.SLIM™

MITSUBISHI ELECTRIC CORPORATION
HEAD OFFICE: TOKYO BLDG., 2-7-3, MARUNOUCHI, CHIYODA-KU, TOKYO 100-8310, JAPAN

© Copyright 2006 MITSUBISHI ELECTRIC ENGINEERING CO.,LTD
Distributed in Jun 2011. No. OB444 REVISED EDITION-H
Distributed in May 2009. No. OB444 REVISED EDITION-G 6
Distributed in Jan. 2009. No. OB444 REVISED EDITION-F 6
Distributed in Sep. 2008. No. OB444 REVISED EDITION-E 6
Distributed in Jun. 2008. No. OB444 REVISED EDITION-D 6
Distributed in Oct. 2007. No. OB444 REVISED EDITION-C 9
Distributed in May 2007. No. OB444 REVISED EDITION-B 9
Distributed in Jun. 2006. No. OB444 REVISED EDITION-A 8
Distributed in Mar. 2006. No. OB444 8
Made in Japan

New publication, effective Jun 2011
Specifications subject to change without notice.