Changes for the Better

MITSUBISHI ELECTRIC

SPLIT-TYPE, HEAT PUMP AIR CONDITIONERS
SPLIT-TYPE, AIR CONDITIONERS

March 2012

No. OCH501

SERVICE MANUAL

Series PCA Ceiling Suspended R410A

Indoor unit [Model names]	[Service Ref.]
PCA-A24KA4	PCA-A24KA4.TH
PCA-A30KA4	PCA-A30KA4.TH
PCA-A36KA4	PCA-A36KA4.TH
PCA-A42KA5	PCA-A42KA5.TH

NOTE:
- This manual describes only service data of the indoor units.
- RoHS compliant products have <G> mark on the spec name plate.

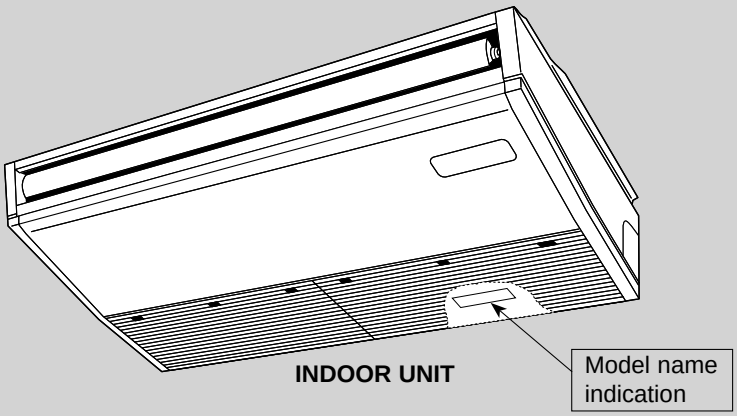

INDOOR UNIT

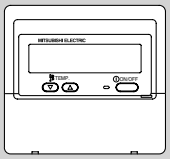

WIRED REMOTE CONTROLLER (Option)

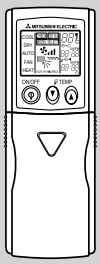

IR WIRELESS REMOTE CONTROLLER (Option)

CONTENTS

1. REFERENCE MANUAL 2
2. SAFETY PRECAUTION 3
3. PART NAMES AND FUNCTIONS 4
4. SPECIFICATIONS 7
5. NOISE CRITERION CURVES 9
6. OUTLINES AND DIMENSIONS 10
7. WIRING DIAGRAM 12
8. REFRIGERANT SYSTEM DIAGRAM 13
9. TROUBLESHOOTING 14
10. SPECIAL FUNCTION 28
11. DISASSEMBLY PROCEDURE 31

PARTS CATALOG (OCB501)

C ETL LISTED US Intertek 9700058

Mr.SLIM™

1 REFERENCE MANUAL

OUTDOOR UNIT'S SERVICE MANUAL

Model name	Service Ref.	Service Manual No.
PUZ-A18/24/30/36/42NHA4	PUZ-A18/24/30/36/42NHA4	OCH481 OCB481
PUZ-A18/24/30/36/42NHA4-BS	PUZ-A18/24/30/36/42NHA4-BS	
PUY-A12/18/24/30/36/42NHA4	PUY-A12/18/24/30/36/42NHA4	
PUY-A12/18/24/30/36/42NHA4-BS	PUY-A12/18/24/30/36/42NHA4-BS	
PUZ-HA30/36NHA4	PUZ-HA30/36NHA4	OCH504/OCB504
PUZ-A42NHA5	PUZ-A42NHA5	OCH512 OCB512
PUZ-A42NHA5-BS	PUZ-A42NHA5-BS	
PUY-A42NHA5	PUY-A42NHA5	
PUY-A42NHA5-BS	PUY-A42NHA5-BS	

■ **Remote controller (Optional parts)**

Radio frequency interface	Wired remote controller	IR wireless remote controller
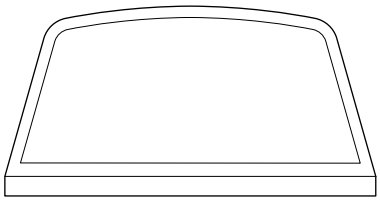	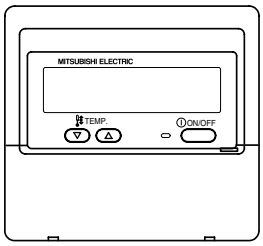	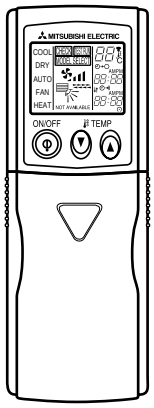
RF thermostat		
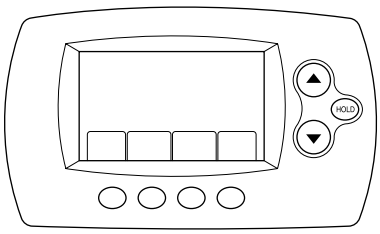		

2 SAFETY PRECAUTION

2-1. ALWAYS OBSERVE FOR SAFETY

Before obtaining access to terminal, all supply circuits must be disconnected.

2-2. CAUTIONS RELATED TO NEW REFRIGERANT

Cautions for units utilising refrigerant R410A

Use new refrigerant pipes.

Make sure that the inside and outside of refrigerant piping is clean and it has no contaminants such as sulfur, oxides, dirt, shaving particles, etc, which are hazards to refrigerant cycle.
In addition, use pipes with specified thickness.

Contamination inside refrigerant piping can cause deterioration of refrigerant oil etc.

Store the piping to be used indoors during installation, and keep both ends of the piping sealed until just before brazing. (Leave elbow joints, etc. in their packaging.)

If dirt, dust or moisture enters into refrigerant cycle, that can cause deterioration of refrigerant oil or malfunction of compressor.

The refrigerant oil applied to flare and flange connections must be ester oil, ether oil or alkylbenzene oil in a small amount.

If large amount of mineral oil enters, that can cause deterioration of refrigerant oil etc.

Charge refrigerant from liquid phase of gas cylinder.

If the refrigerant is charged from gas phase, composition change may occur in refrigerant and the efficiency will be lowered.

Use the specified refrigerant only.

Never use any refrigerant other than that specified.
Doing so may cause a burst, an explosion, or fire when the unit is being used, serviced, or disposed of.
Correct refrigerant is specified in the manuals and on the spec labels provided with our products.
We will not be held responsible for mechanical failure, system malfunction, unit breakdown or accidents caused by failure to follow the instructions.

Do not use refrigerant other than R410A.

If other refrigerant (R22 etc.) is used, chlorine in refrigerant can cause deterioration of refrigerant oil etc.

Use a vacuum pump with a reverse flow check valve.

Vacuum pump oil may flow back into refrigerant cycle and that can cause deterioration of refrigerant oil etc.

Use the following tools specifically designed for use with R410A refrigerant.

The following tools are necessary to use R410A refrigerant.

Tools for R410A	
Gauge manifold	Flare tool
Charge hose	Size adjustment gauge
Gas leak detector	Vacuum pump adaptor
Torque wrench	Electronic refrigerant charging scale

Handle tools with care.

If dirt, dust or moisture enters into refrigerant cycle, that can cause deterioration of refrigerant oil or malfunction of compressor.

Do not use a charging cylinder.

If a charging cylinder is used, the composition of refrigerant will change and the efficiency will be lowered.

Ventilate the room if refrigerant leaks during operation. If refrigerant comes into contact with a flame, poisonous gases will be released.

[1] Cautions for service

(1) Perform service after recovering the refrigerant left in unit completely.
(2) Do not release refrigerant in the air.
(3) After completing service, charge the cycle with specified amount of refrigerant.
(4) When performing service, install a filter drier simultaneously.
Be sure to use a filter drier for new refrigerant.

[2] Additional refrigerant charge

When charging directly from cylinder

· Check that cylinder for R410A on the market is syphon type.
· Charging should be performed with the cylinder of syphon stood vertically. (Refrigerant is charged from liquid phase.)

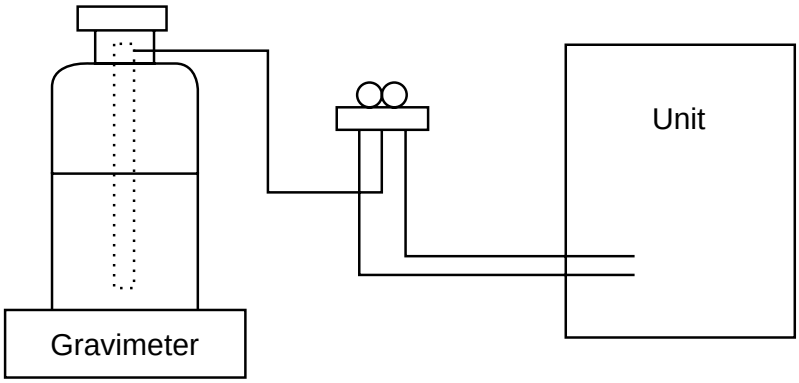

[3] Service tools

Use the below service tools as exclusive tools for R410A refrigerant.

No.	Tool name	Specifications
①	Gauge manifold	· Only for R410A
		· Use the existing fitting specifications. (UNF1/2)
		· Use high-tension side pressure of 5.3MPa·G or over.
②	Charge hose	· Only for R410A
		· Use pressure performance of 5.09MPa·G or over.
③	Electronic scale	—
④	Gas leak detector	· Use the detector for R134a, R407C or R410A.
⑤	Adaptor for reverse flow check	· Attach on vacuum pump.
⑥	Refrigerant charge base	—
⑦	Refrigerant cylinder	· Only for R410A · Top of cylinder (Pink) · Cylinder with syphon
⑧	Refrigerant recovery equipment	—

3 PART NAMES AND FUNCTIONS

● Indoor Unit

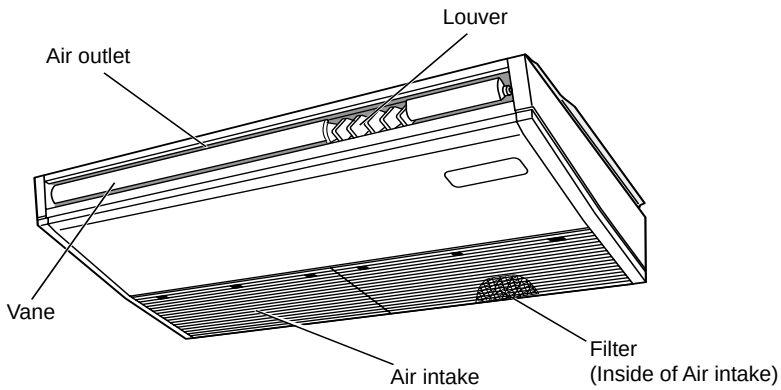

● Wired remote controller (Option)

Display Section

For purposes of this explanation, all parts of the display are shown. During actual operation, only the relevant items will be lit.

Day-of-Week
Shows the current day of the week.

Time/Timer Display
Shows the current time, unless the simple or Auto Off timer is set.
If the simple or Auto Off timer is set, the time to be switched off is shown.

"Sensor" indication
Displayed when the remote controller sensor is used.

"Locked" indicator
Indicates that remote controller buttons have been locked.

Identifies the current operation
Shows the operating mode, etc.
*Multilanguage display is available.

"Clean The Filter" indicator
To be displays on when it is time to clean the filter.

Timer indicators
The indicator comes on if the corresponding timer is set.

"Centrally Controlled" indicator
Indicates that operation from the remote controller has been prohibited by a master controller.

Fan Speed indicator
Shows the selected fan speed.

Up/Down Air Direction indicator
The indicator ↘ shows the direction of the outcoming airflow.

Room Temperature display
Shows the room temperature. The room temperature display range is 46-102°F. The display blinks if the temperature is less than 46°F or 102°F or more.

Ventilation indicator
Appears when the unit is running in Ventilation mode.

"Timer is Off" indicator
Indicates that the timer is off.

"One Hour Only" indicator
Displays if the airflow is set to Low or downward during COOL or DRY mode. (Operation varies according to model.)
The indicator goes off in one hour, at which time the airflow direction also changes.

Louver display
Indicates the action of the swing louver. Does not appear if the louver is not running.

Temperature Setting
Shows the target temperature.

◉ (Power On indicator)
Indicates that the power is on.

Operation Section

Temperature setting buttons
▽ Down
△ Up

Timer Menu button (Monitor/Set button)

Mode button (Return button)

Set Time buttons
▽ Back
△ Ahead

Timer On/Off button (Set Day button)

Opening the cover

ON/OFF button

Fan Speed button

Filter ↵ button (<Enter> button)

Test Run button

Check button (Clear button)

Airflow Up/Down button

Louver button (▽ Operation button)

▽ To return operation number

Ventilation button (△ Operation button)

△ To go to next operation number

Built-in temperature sensor

● IR wireless remote controller (Option)

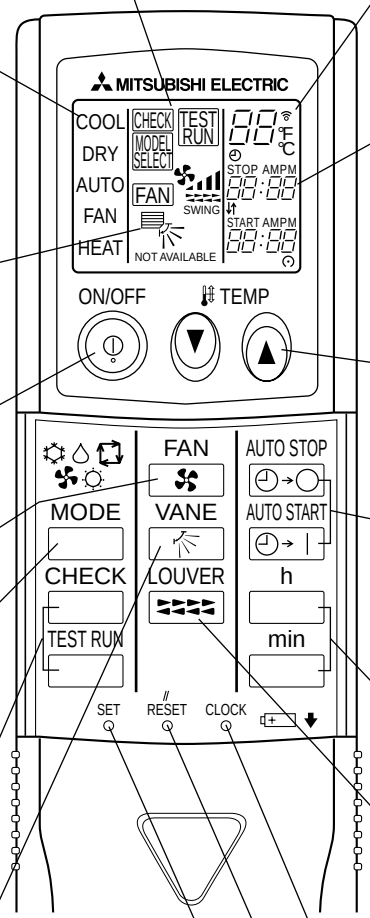

CHECK TEST RUN display

Indicate that the unit is being checked or test-run.

MODEL SELECT display

Blinks when model is selected.

OPERATION MODE display

OPERATION MODE display
Indicates which operation mode is in effect.

display

The vertical direction of airflow is indicated.

display

Displays selected fan speed.

ON/OFF button

The unit is turned ON and OFF alternately each time the button is pressed.

FAN SPEED SELECT button

Changes the fan speed.

MODE SELECT button

Switches the operation mode between COOLING/DRY/FAN/HEATING and AUTO mode.

※In case the outdoor unit is cooling only type, the heating and auto mode are not available.

CHECK-TEST RUN button

Performs an inspection check or test operation. Do not use it for normal operation.

VANE CONTROL button

Changes the air flow direction.

display

Lights up while the signal is transmitted to the indoor unit when the button is pressed.

Temperature setting display

Indicates the desired temperature setting which is set.

CLOCK display

Displays the current time.

TIMER display

Displays when in timer operation or when setting timer.

" ↓ " " ↑ " display

Displays the order of timer operation.

" ◴→| " " ◴→○ " display

Displays whether timer is on or off.

button

Sets any desired room temperature.

TIMER CONTROL buttons

AUTO STOP (OFF timer): when this switch is set, the air conditioner will be automatically stopped at the preset time.
AUTO START (ON timer): when this switch is set, the air conditioner will be automatically started at the preset time.

"h" and "min" buttons

Buttons used to set the "hour and minute" of the current time and timer settings.

LOUVER button

Changes left / right airflow direction.
(Not available for this model.)

CLOCK button

RESET button

SET button

4 SPECIFICATIONS

INDOOR UNIT	**Service Ref.**			**PCA-A24KA4.TH**
	Power supply(phase, cycle, voltage)			1 phase, 60Hz, 208/230V
		Max. Fuse Size	A	15
		Min.Circuit Ampacity	A	1
	External finish			White Munsell 6.4Y 8.9/0.4
	Heat exchanger			Plate fin coil
	Fan	Fan(drive) × No.		Sirocco fan (direct) × 3
		Fan motor output	kW	0.095
		Fan motor	F.L.A	0.54
		Airflow(Low-Medium2-Medium1-High)	m^3/min(CFM)	Dry: 15-16-17-19(530-565-600-670)
				Wet: 14-15-16-18(495-530-565-635)
		External static pressure	Pa(mmAq)	0(direct blow)
	Operation control & Thermostat			Remote controller & built-in
	Noise level(Low-Medium2-Medium1-High)		dB	33-35-37-40
	Field drain pipe O.D.		mm(in.)	26(1-1/32)
	Dimensions	W	mm(in.)	1,280(50-3/8)
		D	mm(in.)	680(26-3/4)
		H	mm(in.)	230(9-1/16)
	Weight		kg(lbs)	32(71)

INDOOR UNIT	**Service Ref.**			**PCA-A30KA4.TH**
	Power supply(phase, cycle, voltage)			1 phase, 60Hz, 208/230V
		Max. Fuse Size	A	15
		Min.Circuit Ampacity	A	1
	External finish			White Munsell 6.4Y 8.9/0.4
	Heat exchanger			Plate fin coil
	Fan	Fan(drive) × No.		Sirocco fan (direct) × 3
		Fan motor output	kW	0.095
		Fan motor	F.L.A	0.54
		Airflow(Low-Medium2-Medium1-High)	m^3/min(CFM)	Dry: 16-17-18-20(565-600-635-705)
				Wet:15-16-17-19(530-565-600-670)
		External static pressure	Pa(mmAq)	0(direct blow)
	Operation control & Thermostat			Remote controller & built-in
	Noise level(Low-Medium2-Medium1-High)		dB	35-37-39-41
	Field drain pipe O.D.		mm(in.)	26(1-1/32)
	Dimensions	W	mm(in.)	1,280(50-3/8)
		D	mm(in.)	680(26-3/4)
		H	mm(in.)	230(9-1/16)
	Weight		kg(lbs)	32(71)

INDOOR UNIT	**Service Ref.**			**PCA-A36KA4.TH**
	Power supply(phase, cycle, voltage)			1 phase, 60Hz, 208/230V
		Max. Fuse Size	A	15
		Min.Circuit Ampacity	A	2
	External finish			White Munsell 6.4Y 8.9/0.4
	Heat exchanger			Plate fin coil
	Fan	Fan(drive) × No.		Sirocco fan (direct) × 4
		Fan motor output	kW	0.160
		Fan motor	F.L.A	0.97
		Airflow(Low-Medium2-Medium1-High)	m^3/min(CFM)	Dry: 22-24-26-28(775-850-920-990)
				Wet:20-22-24-26(705-775-850-920)
		External static pressure	Pa(mmAq)	0(direct blow)
	Operation control & Thermostat			Remote controller & built-in
	Noise level(Low-Medium2-Medium1-High)		dB	37-39-41-43
	Field drain pipe O.D.		mm(in.)	26(1-1/32)
	Dimensions	W	mm(in.)	1,600(63)
		D	mm(in.)	680(26-3/4)
		H	mm(in.)	230(9-1/16)
	Weight		kg(lbs)	36(79)

INDOOR UNIT	**Service Ref.**			**PCA-A42KA5.TH**
	Power supply(phase, cycle, voltage)			1 phase, 60Hz, 208/230V
		Max. Fuse Size	A	15
		Min.Circuit Ampacity	A	2
	External finish			White Munsell 6.4Y 8.9/0.4
	Heat exchanger			Plate fin coil
	Fan	Fan(drive) × No.		Sirocco fan (direct) × 4
		Fan motor output	kW	0.160
		Fan motor	F.L.A	0.97
		Airflow(Low-Medium2-Medium1-High)	m³/min(CFM)	Dry: 23-25-27-29(810-885-955-1025)
				Wet: 21-23-25-27(740-810-885-955)
		External static pressure	Pa(mmAq)	0(direct blow)
	Operation control & Thermostat			Remote controller & built-in
	Noise level(Low-Medium2-Medium1-High)		dB	39-41-43-45
	Field drain pipe O.D.		mm(in.)	26(1-1/32)
	Dimensions	W	mm(in.)	1,600(63)
		D	mm(in.)	680(26-3/4)
		H	mm(in.)	230(9-1/16)
	Weight		kg(lbs)	39(86)

5 NOISE CRITERION CURVES

PCA-A24KA4.TH

NOTCH	SPL(dB)	LINE
High	40	○—○
Medium1	37	△—△
Medium2	35	●—●
Low	33	▲—▲

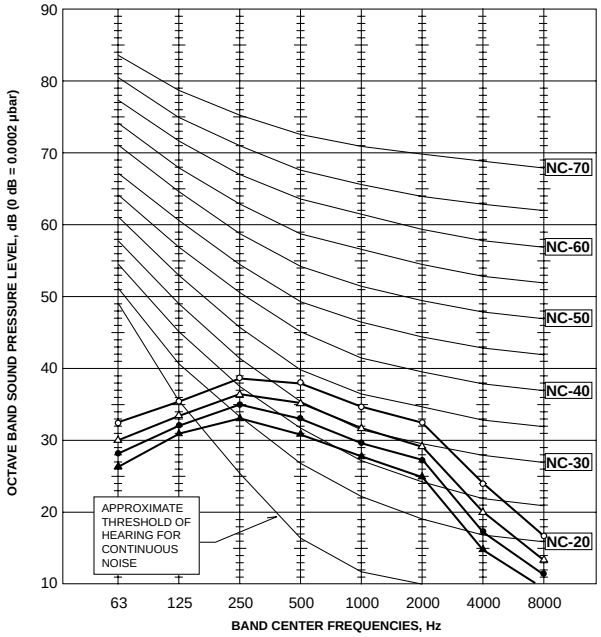

PCA-A30KA4.TH

NOTCH	SPL(dB)	LINE
High	41	○—○
Medium1	39	△—△
Medium2	37	●—●
Low	35	▲—▲

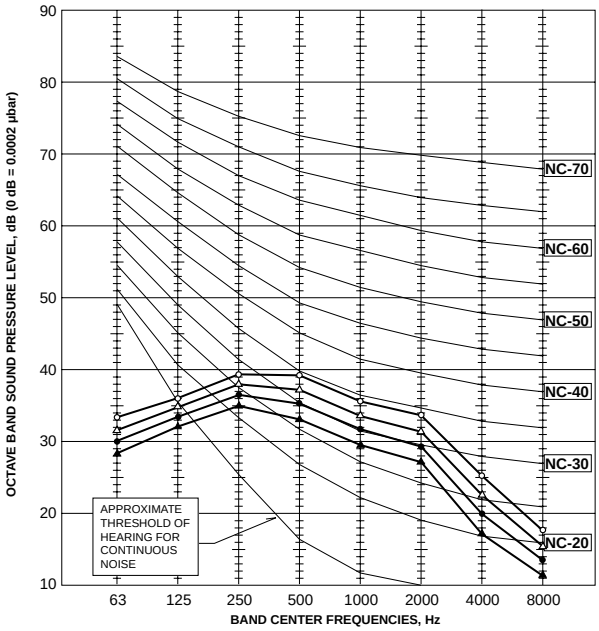

PCA-A36KA4.TH

NOTCH	SPL(dB)	LINE
High	43	○—○
Medium1	41	△—△
Medium2	39	●—●
Low	37	▲—▲

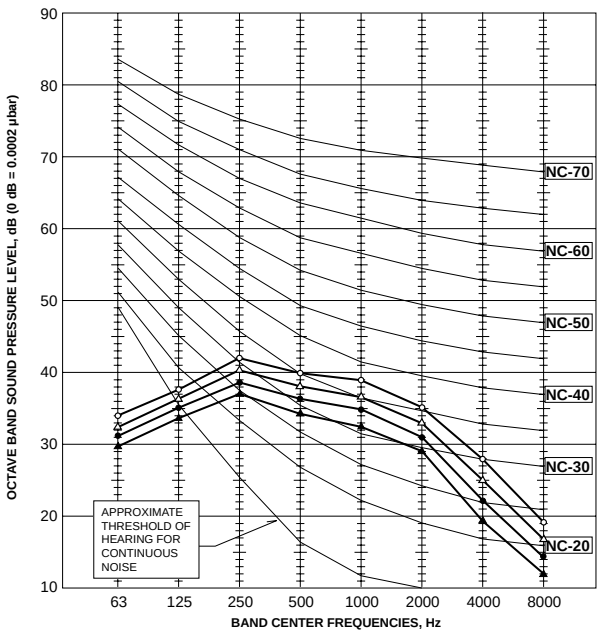

PCA-A42KA5.TH

NOTCH	SPL(dB)	LINE
High	45	○—○
Medium1	43	△—△
Medium2	41	●—●
Low	39	▲—▲

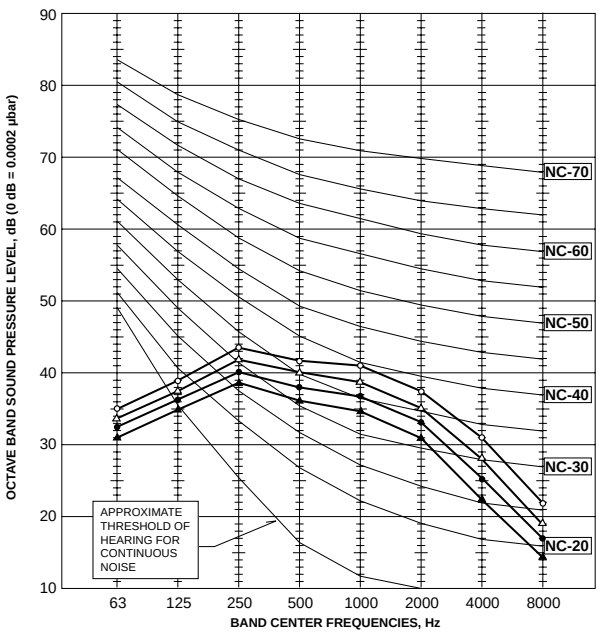

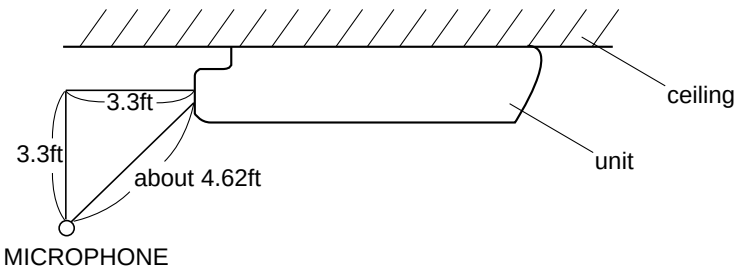

6 OUTLINES AND DIMENSIONS

PCA-A24KA4.TH **PCA-A30KA4.TH**

Unit: inch (mm)

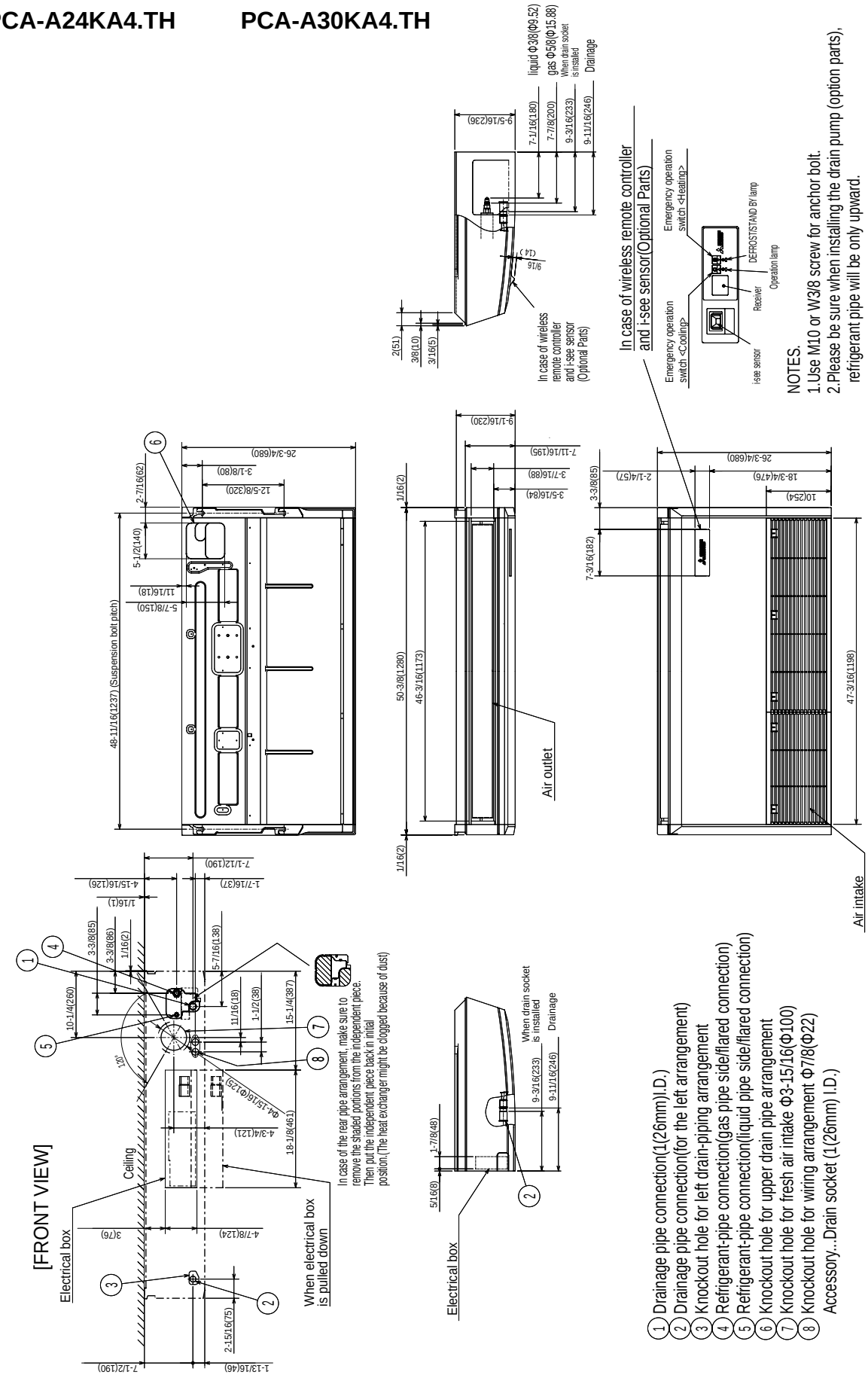

PCA-A36KA4.TH **PCA-A42KA5.TH**

Unit: inch (mm)

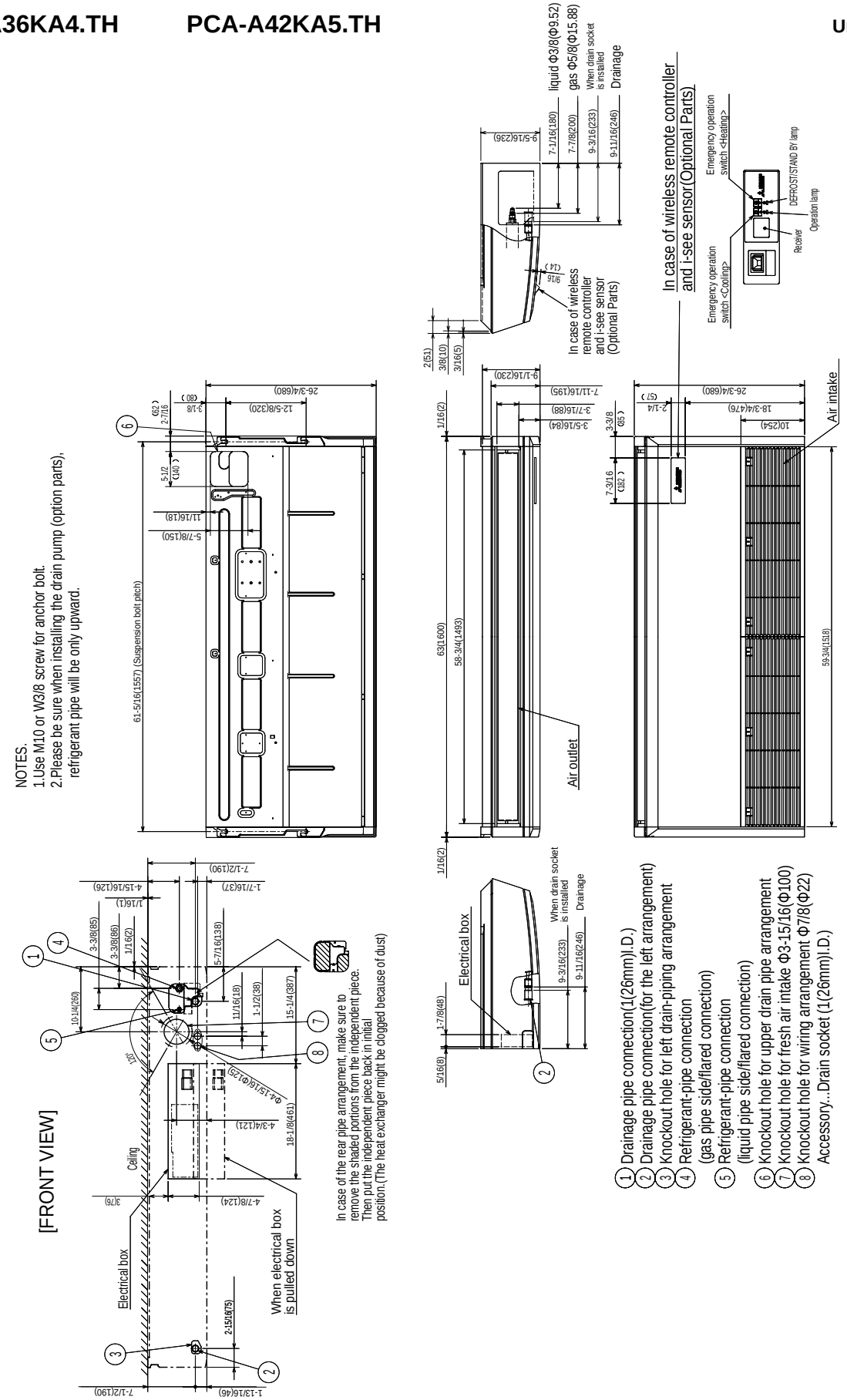

7 WIRING DIAGRAM

PCA-A24KA4.TH PCA-A30KA4.TH PCA-A36KA4.TH PCA-A42KA5.TH

【LEGEND】

SYMBOL	NAME
I.B	INDOOR CONTROLLER BOARD
CN2L	CONNECTOR (LOSSNAY)
CN24	CONNECTOR (BACK-UP HEATING)
CN30	CONNECTOR (LLC)
CN32	CONNECTOR (REMOTE SWITCH)
CN41	CONNECTOR (HA TERMINAL-A)
CN51	CONNECTOR (CENTRALLY CONTROL)
CN105	CONNECTOR (RADIO FREQUENCY INTERFACE)
FUSE	FUSE (T6.3AL250V)
LED1	POWER SUPPLY (I.B)
LED2	POWER SUPPLY (R.B)
LED3	TRANSMISSION (INDOOR-OUTDOOR)
SW1	SWITCH (MODEL SELECTION) ※See table 1
SW2	SWITCH (CAPACITY CODE) ※See table 2
SWE	CONNECTOR (EMERGENCY OPERATION)
X1	RELAY (DRAIN PUMP)
MF	FAN MOTOR
MV	VANE MOTOR
RFI	RADIO FREQUENCY INTERFACE FOR RF THERMOSTAT

SYMBOL	NAME
TB4	TERMINAL BLOCK (INDOOR/OUTDOOR CONNECTING LINE)
TB5	TERMINAL BLOCK (REMOTE CONTROLLER TRANSMISSION LINE)
TH1	ROOM TEMP. THERMISTOR (32ºF / 15kΩ, 77ºF / 5.4kΩ DETECT)
TH2	PIPE TEMP. THERMISTOR/LIQUID (32ºF / 15kΩ, 77ºF / 5.4kΩ DETECT)
TH5	COND. / EVA. TEMP. THERMISTOR (32ºF / 15kΩ, 77ºF / 5.4kΩ DETECT)
OPTION PARTS	
W.B	PCB FOR IR WIRELESS REMOTE CONTROLLER
BZ	BUZZER
LED1	LED (OPERATION INDICATION : GREEN)
LED2	LED (PREPARATION FOR HEATING : ORANGE)
RU	RECEIVING UNIT
SW1	EMERGENCY OPERATION (HEAT)
SW2	EMERGENCY OPERATION (COOL)
DP	DRAIN PUMP
FS	DRAIN FLOAT SWITCH
R.B	WIRED REMOTE CONTROLLER BOARD
TB6	TERMINAL BLOCK (REMOTE CONTROLLER TRANSMISSION LINE)
MT	I-SEE SENSOR MOTOR

The black square(■)indicates a switch position.

<Table 1>
SW1(MODEL SELECTION)

SW1
Manufacture/Service
1 2 3 4 5 ON OFF

<Table 2>
SW2(CAPACITY CODE)

SW2			
MODELS	Manufacture/Service	MODELS	Manufacture/Service
PCA-A24KA4	1 2 3 4 5 ON OFF	PCA-A36KA4	1 2 3 4 5 ON OFF
PCA-A30KA4	1 2 3 4 5 ON OFF	PCA-A42KA5	1 2 3 4 5 ON OFF

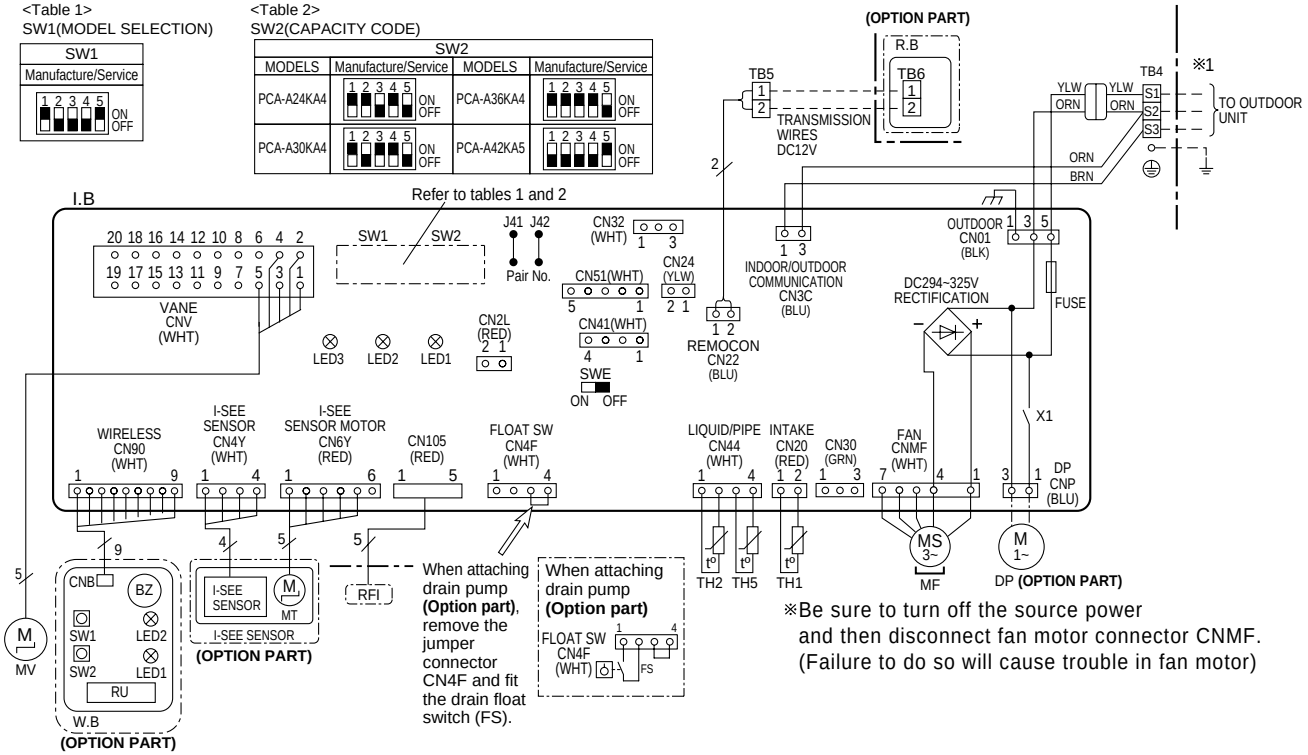

Notes: 1.Symbols used in wiring diagram above are, ○○○:Connector, □□□:Terminal block.
2.Indoor and outdoor connecting wires are made with polarities, make wiring matching terminal numbers (S1, S2, S3).
3.Since the outdoor side electric wiring may change, be sure to check the outdoor unit electric wiring for servicing.
※1:Use copper supply wire.

8 REFRIGERANT SYSTEM DIAGRAM

PCA-A24KA4.TH PCA-A30KA4.TH PCA-A36KA4.TH PCA-A42KA5.TH

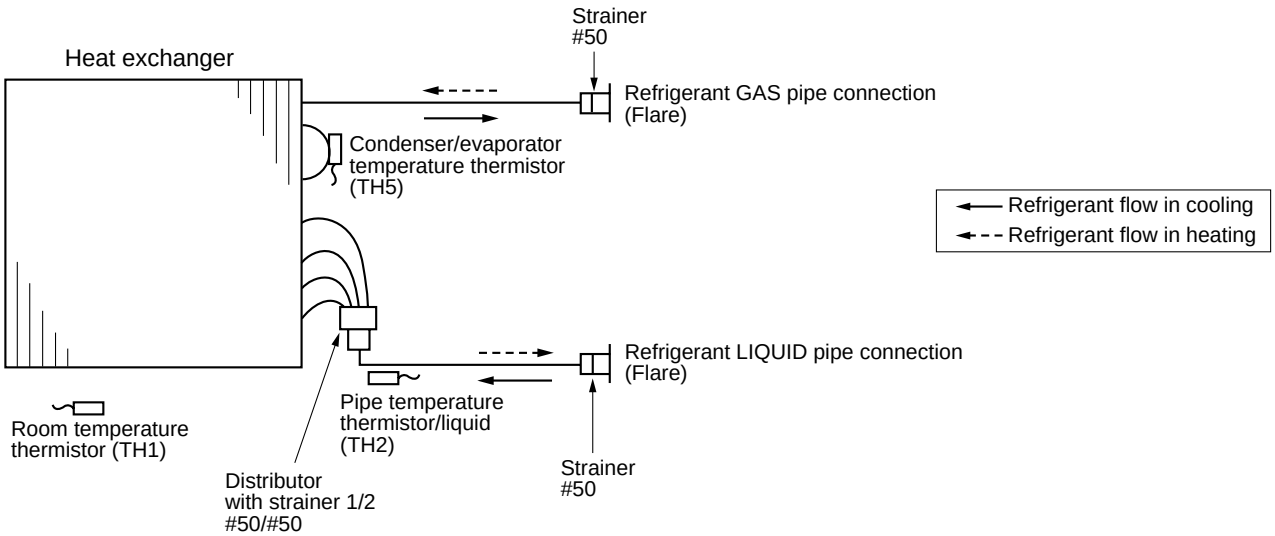

9 TROUBLESHOOTING

9-1. TROUBLESHOOTING

<Error code display by self-diagnosis and actions to be taken for service (summary)>
Present and past error codes are logged and displayed on the wired remote controller or controller board of outdoor unit. Actions to be taken for service and the trouble reoccurrence at field are summarized in the table below. Check the contents below before investigating details.

Unit conditions at service	Error code	Actions to be taken for service (summary)
The trouble is reoccurring.	Displayed	Judge what is wrong and take a corrective action according to “9-3. Self-diagnosis action table”.
	Not displayed	Conduct troubleshooting and ascertain the cause of the trouble according to “9-4. Troubleshooting of problems”.
The trouble is not reoccurring.	Logged	①Consider the temporary defects such as the work of protection devices in the refrigerant circuit including compressor, poor connection of wiring, noise and etc. Re-check the symptom, and check the installation environment, refrigerant amount, weather when the trouble occurred, matters related to wiring and etc. ②Reset error code logs and restart the unit after finishing service. ③There is no abnormality in electrical component, controller board,remote controller and etc.
	Not logged	①Re-check the abnormal symptom. ②Conduct trouble shooting and ascertain the cause of the trouble according to “9-4. Troubleshooting of problems”. ③Continue to operate unit for the time being if the cause is not ascertained. ④There is no abnormality concerning of parts such as electrical component, controller board, remote controller and etc.

9-2. MALFUNCTION-DIAGNOSIS METHOD BY REMOTE CONTROLLER

<In case of trouble during operation>

When a malfunction occurs to air conditioner, both indoor unit and outdoor unit will stop and operation lamp blinks to inform unusual stop.

<Malfunction-diagnosis method at maintenance service>

■ IR wireless remote controller

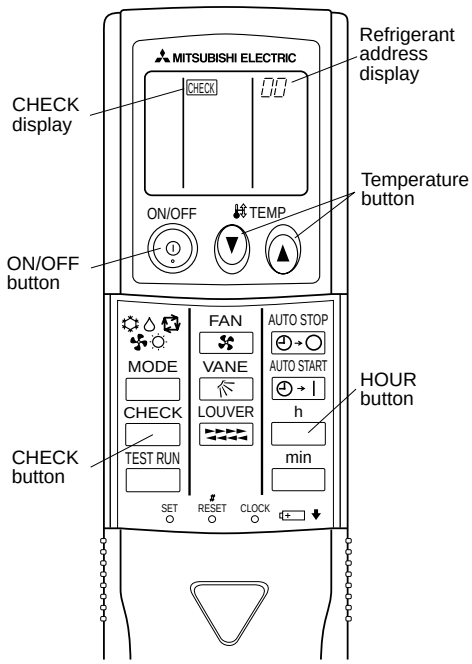

[Procedure]

1. Press the CHECK button twice.
   - "CHECK" lights, and refrigerant address "00" blinks.
   - Check that the remote controller's display has stopped before continuing.
2. Press the temperature buttons.
   - Select the refrigerant address of the indoor unit for the self-diagnosis.

   Note: Set refrigerant address using the outdoor unit's DIP switch (SW1). (For more information, see the outdoor unit installation manual.)
3. Point the remote controller at the sensor on the indoor unit and press the HOUR button.
   - If an air conditioner error occurs, the indoor unit's sensor emits an intermittent buzzer sound, the operation lamp blinks, and the error code is output. (It takes 3 seconds at most for error code to appear.)
4. Point the remote controller at the sensor on the indoor unit and press the ON/OFF button.
   - The check mode is cancelled.

■ Wired remote controller

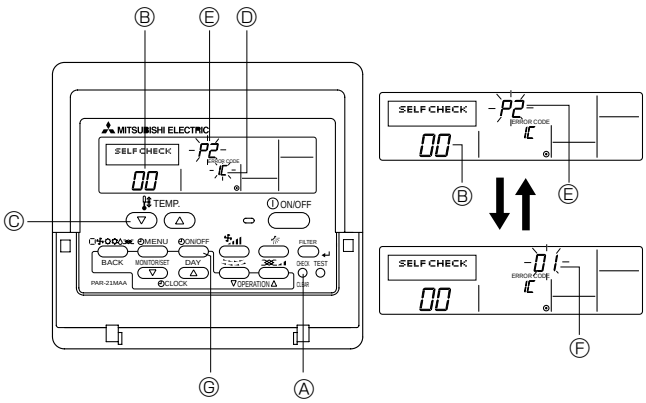

① Turn on the power.
② Press the [CHECK] button twice.
③ Set address with [TEMP] button if system control is used.
④ Press the [ON/OFF] button to stop the self-check.

Ⓐ CHECK button
Ⓑ Address
Ⓒ TEMP. button
Ⓓ IC : Indoor unit
OC: Outdoor unit
Ⓔ Check code (– – – – : No trouble generated in the past.
F F F F : No corresponding unit.)
Ⓕ Unit No.
Ⓖ Timer ON/OFF button

<To delete check code>
① Display the error code on the self-check result display screen.
② The address for self-check will blink when the Ⓖ ◴ON/OFF button is pressed twice within 3 seconds.

To be continued to the next page.

• Refer to the following tables for details on the check codes.

[Output pattern A]

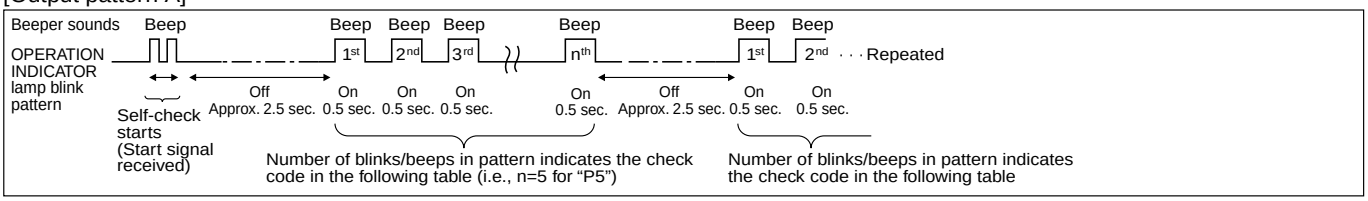

[Output pattern B]

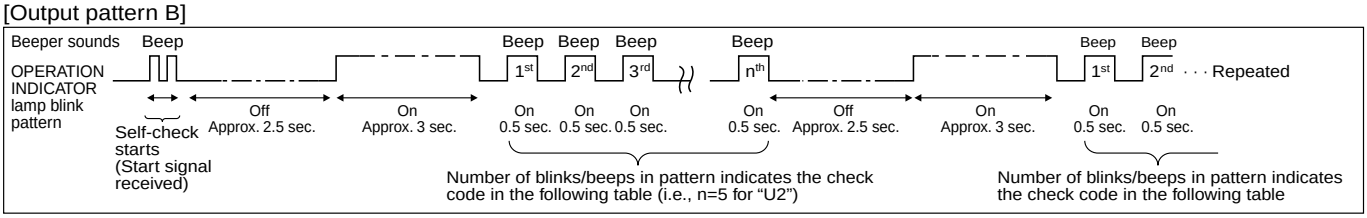

[Output pattern A] Errors detected by indoor unit

IR wireless remote controller Beeper sounds/OPERATION INDICATOR lamp blinks (Number of times)	Wired remote controller ① Check code	Symptom	Remark
1	P1	Intake sensor error	———
2	P2	Pipe (TH2) sensor error	
	P9	Pipe (TH5) sensor error	
3	E6,E7	Indoor/outdoor unit communication error	
4	P4	Float switch connector (CN4F) open	
5	P5	Drain pump error	
	PA	Forced compressor stop(due to water leakage abnormality)	
6	P6	Freezing/Overheating protection operation	
7	EE	Communication error between indoor and outdoor units	
8	P8	Pipe temperature error	
9	E4, E5	Remote controller signal receiving error	
10	–	–	
11	–	–	
12	Fb	Indoor unit control system error (memory error, etc.)	
–	E0, E3	Remote controller transmission error	
–	E1, E2	Remote controller control board error	

[Output pattern B] Errors detected by unit other than indoor unit (outdoor unit, etc.)

IR wireless remote controller Beeper sounds/OPERATION INDICATOR lamp blinks (Number of times)	Wired remote controller ① Check code	Symptom	Remark
1	E9	Indoor/outdoor unit communication error (Transmitting error) (Outdoor unit)	For details, check the LED display of the outdoor controller board. As for outdoor unit, refer to outdoor unit's service manual.
2	UP	Compressor overcurrent interruption	
3	U3,U4	Open/short of outdoor unit thermistors	
4	UF	Compressor overcurrent interruption (When compressor locked)	
5	U2	Abnormal high discharging temperature/49C operated/ insufficient refrigerant	
6	U1,Ud	Abnormal high pressure (63H operated)/Overheating protection operation	
7	U5	Abnormal temperature of heatsink	
8	U8	Outdoor unit fan protection stop	
9	U6	Compressor overcurrent interruption/Abnormal of power module	
10	U7	Abnormality of superheat due to low discharge temperature	
11	U9,UH	Abnormality such as overvoltage or voltage shortage and abnormal synchronous signal to main circuit/Current sensor error	
12	–	–	
13	–	–	
14	Others	Other errors (Refer to the technical manual for the outdoor unit.)	

*1 If the beeper does not sound again after the initial 2 beeps to confirm the self-check start signal was received and the OPERATION INDICATOR lamp does not come on, there are no error records.

*2 If the beeper sounds 3 times continuously "beep, beep, beep (0.4 + 0.4 + 0.4 sec.)" after the initial 2 beeps to confirm the self-check start signal was received, the specified refrigerant address is incorrect.

• On IR wireless remote controller
The continuous buzzer sounds from receiving section of indoor unit.
Blink of operation lamp
• On wired remote controller
① Check code displayed in the LCD. (Refer to the previous page, ① check code.)

• If the unit cannot be operated properly after the test run, refer to the following table to find out the cause.

Symptom			Cause
Wired remote controller		LED 1, 2 (PCB in outdoor unit)	
PLEASE WAIT	For about 2 minutes after power-on	After LED 1, 2 are lighted, LED 2 is turned off, then only LED 1 is lighted. (Correct operation)	•For about 2 minutes following power-on,operation of the remote controller is not possible due to system start-up. (Correct operation)
PLEASE WAIT → Error code	Subsequent to about 2 minutes after power-on	Only LED 1 is lighted. → LED 1, 2 blink.	•Connector for the outdoor unit's protection device is not connected. •Reverse or open phase wiring for the outdoor unit's power terminal block (L1, L2, GR)
Display messages do not appear even when operation switch is turned ON (operation lamp does not light up).		Only LED 1 is lighted. → LED 1 blinks twice, LED 2 blinks once.	•Incorrect wiring between indoor and outdoor units (incorrect polarity of S1, S2, S3) •Remote controller wire short

On the IR wireless remote controller with condition above, following phenomena take place.
• No signals from the remote controller can be received.
• OPE lamp is blinking.
• The buzzer makes a short ping sound.

Note:
Operation is not possible for about 30 seconds after cancellation of function selection. (Correct operation)

For description of each LED (LED1, 2, 3) provided on the indoor controller, refer to the following table.

LED1 (power for microprocessor)	Indicates whether control power is supplied. Make sure that this LED is always lit.
LED2 (power for wired remote controller)	Indicates whether power is supplied to the wired remote controller. This LED lights only in the case of the indoor unit which is connected to the outdoor unit refrigerant addresses "0".
LED3 (communication between indoor and outdoor units)	Indicates state of communication between the indoor and outdoor units. Make sure that this LED is always blinking.

9-3. SELF-DIAGNOSIS ACTION TABLE

Note: Refer to the manual of outdoor unit for the details of display such as F, U, and other E.

Error Code	Abnormal point and detection method	Cause	Countermeasure
P1	**Room temperature thermistor (TH1)** ① The unit is in 3-minute resume prevention mode if short/open of thermistor is detected. Abnormal if the unit does not reset normally after 3 minutes. (The unit returns to normal operation, if it has been reset normally.) ② Constantly detected during cooling, drying, and heating operation. Short: 90℃[194˚F] or more Open: -40℃[-40˚F] or less	① Defective thermistor characteristics ② Contact failure of connector (CN20) on the indoor controller board (Insert failure) ③ Breaking of wire or contact failure of thermistor wiring ④ Defective indoor controller board	①–③ Check resistance value of thermistor. 0℃ [32˚F] ·····15.0kΩ 10℃[50˚F] ·····9.6kΩ 20℃[68˚F] ·····6.3kΩ 30℃[86˚F] ·····4.3kΩ 40℃[104˚F] ·····3.0kΩ If you put force on (draw or bend) the lead wire while measuring resistance value of thermistor, breaking of wire or contact failure can be detected. ② Check contact failure of connector (CN20) on the indoor controller board. Refer to 9-7. Turn the power on again and check restart after inserting connector again. ④ Check room temperature display on remote controller. Replace indoor controller board if there is abnormal difference with actual room temperature. Turn the power off, and on again to operate after check.
P2	**Pipe temperature thermistor/Liquid (TH2)** ① The unit is in 3-minute resume prevention mode if short/open of thermistor is detected. Abnormal if the unit does not reset normally after 3 minutes. (The unit returns to normal operation, if it has been reset normally.) ② Constantly detected during cooling, drying, and heating (except defrosting) operation. Short: 90℃[194˚F] or more Open: -40℃[-40˚F] or less	① Defective thermistor characteristics ② Contact failure of connector (CN44) on the indoor controller board (Insert failure) ③ Breaking of wire or contact failure of thermistor wiring ④ Defective refrigerant circuit is causing thermistor temperature of 90℃[194˚F] or more or -40℃[-40˚F] or less. ⑤ Defective indoor controller board	①–③ Check resistance value of thermistor. For characteristics, refer to (P1) above. ② Check contact failure of connector (CN44) on the indoor controller board. Refer to 9-7. Turn the power on and check restart after inserting connector again. ④ Check pipe <liquid> temperature with remote controller in test run mode. If pipe <liquid> temperature is extremely low (in cooling mode) or high (in heating mode), refrigerant circuit may have defect. ⑤ Check pipe <liquid> temperature with remote controller in test run mode. If there is extremely difference with actual pipe <liquid> temperature, replace indoor controller board. Turn the power off, and on again to operate after check.
P4	**Contact failure of drain float switch (CN4F)** ① Extract when the connector of drain float switch is disconnected. (③ and ④ of connector CN4F is not short-circuited.) ② Constantly detected during operation.	① Contact failure of connector (Insert failure) ② Defective indoor controller board	① Check contact failure of float switch connector. Turn the power on again and check after inserting connector again. ② Operate with connector (CN4F) short-circuited. Replace indoor controller board if abnormality reappears.
P5	**Drain overflow protection operation** ① Suspensive abnormality, if drain float switch is detected to be underwater for 1 minute and 30 seconds continuously with drain pump on. Turn off compressor and indoor fan. ② Drain pump is abnormal if the condition above is detected during suspensive abnormality. ③ Constantly detected during drain pump operation.	① Malfunction of drain pump ② Defective drain Clogged drain pump Clogged drain pipe ③ Defective drain float switch Catch of drain float switch or malfunction of moving parts cause drain float switch to be detected under water (Switch On) ④ Defective indoor-controller board	① Check if drain pump operates. ② Check drain function. ③ Remove drain float switch connector CN4F and check if it is short (Switch On) with the moving part of float switch UP, or OPEN with the moving part of float switch down. Replace float switch if it is short with the moving part of float switch down. ④ Replace indoor controller board if it is short-circuited between ③-④ of the drain float switch connector CN4F and abnormality reappears. It is not abnormal if there is no problem about the above-mentioned ①~④ Turn the power off, and on again to operate after check.

Error Code	Abnormal point and detection method	Cause	Countermeasure
P6	**Freezing/overheating protection is opearting** ① Freezing protection (Cooling mode) The unit is in 6-minute resume prevention mode if pipe <liquid or condenser/evaporator> temperature stays under -15˚C[5˚F] for 3 minutes, 3 minutes after the compressor started. Abnormal if it stays under -15˚C[5˚F] for 3 minutes again within 16 minutes after 6-minute resume prevention mode. ② Overheating protection (Heating mode) The units is in 6-minute resume prevention mode if pipe <liquid or condenser/evaporator> temperature is detected as over 70°C[158°F] after the compressor started. Abnormal if the temperature of over 70°C[158°F] is detected again within 10 minutes after 6 minute resume prevention mode.	(Cooling or drying mode) ① Clogged filter (reduced airflow) ② Short cycle of air path ③ Low load (low temperature) operation out of the tolerance range ④ Defective indoor fan motor • Fan motor is defective. • Indoor controller board is defective. ⑤ Defective outdoor fan control ⑥ Overcharge of refrigerant ⑦ Defective refrigerant circuit (clogs) (Heating mode) ① Clogged filter (reduced airflow) ② Short cycle of air path ③ Overload (high temperature) operation out of the tolerance range ④ Defective indoor fan motor • Fan motor is defective. • Indoor controller board is defective. ⑤ Defective outdoor fan control ⑥ Overcharge of refrigerant ⑦ Defective refrigerant circuit (clogs) ⑧ Bypass circuit of outdoor unit is defective.	(Cooling or drying mode) ① Check clogs of the filter. ② Remove blockage. ④ Refer to 9-6. ⑤ Check outdoor fan motor. ⑥⑦ Check operating condition of refrigerant circuit. (Heating mode) ① Check clogs of the filter. ② Remove blockage. ④ Refer to 9-6. ⑤ Check outdoor fan motor. ⑥~⑧Check operating condition of refrigerant circuit.
P8	**Pipe temperature** <Cooling mode> Detected as abnormal when the pipe temperature is not in the cooling range 3 minutes after compressor start and 6 minutes after the liquid or condenser/evaporator pipe is out of cooling range. Note 1) It takes at least 9 minutes to detect. Note 2) Abnormality P8 is not detected in drying mode. Cooling range : -3 deg C[-5.4deg F]≧(TH-TH1) TH: Lower temperature either liquid pipe temperature (TH2) or condenser/evaporator temperature (TH5) TH1: Intake temperature <Heating mode> When 10 seconds have passed after the compressor starts operation and the hot adjustment mode has finished, the unit is detected as abnormal when condenser/evaporator pipe temperature is not in heating range within 20 minutes. Note 3) It takes at least 27 minutes to detect abnormality. Note 4) It excludes the period of defrosting (Detection restarts when defrosting mode is over) Heating range : 3 deg C[5.4deg F]≦(TH5-TH1)	① Slight temperature difference between indoor room temperature and pipe <liquid or condenser/evaporator> temperature thermistor • Shortage of refrigerant • Disconnected holder of pipe <liquid or condenser/evaporator> thermistor • Defective refrigerant circuit ② Converse connection of extension pipe (on plural units connection) ③ Converse wiring of indoor/outdoor unit connecting wire (on plural units connection) ④ Defective detection of indoor room temperature and pipe <condenser/evaporator> temperature thermistor ⑤ Stop valve is not opened completely.	①~④ Check pipe <liquid or condenser/evaporator> temperature with room temperature display on remote controller and outdoor controller circuit board. Pipe <liquid or condenser/evaporator> temperature display is indicated by setting SW2 of outdoor controller circuit board as follows. (Conduct temperature check with outdoor controller circuit board after connecting 'A-Control Service Tool (PAC-SK52ST)'.) ②③Check converse connection of extension pipe or converse wiring of indoor/outdoor unit connecting wire.

Error Code	Abnormal point and detection method	Cause	Countermeasure
P9	**Pipe temperature thermistor/ Condenser-Evaporator (TH5)** ① The unit is in 3-minute resume protection mode if short/open of thermistor is detected. Abnormal if the unit does not get back to normal within 3 minutes. (The unit returns to normal operation, if it has been reset normally.) ② Constantly detected during cooling, drying, and heating operation (except defrosting) Short: 90˚C[194˚F] or more Open: -40˚C[-40˚F] or less	① Defective thermistor characteristics ② Contact failure of connector (CN44) on the indoor controller board (Insert failure) ③ Breaking of wire or contact failure of thermistor wiring ④ Temperature of thermistor is 90˚C[194˚F] or more or -40˚C[-40˚F] or less caused by defective refrigerant circuit. ⑤ Defective indoor controller board	①–③ Check resistance value of thermistor. For characteristics, refer to (P1) above. ② Check contact failure of connector (CN44) on the indoor controller board. Refer to 9-7. Turn the power on and check restart after inserting connector again. ④ Operate in test run mode and check pipe <condenser/evaporator> temperature with outdoor controller circuit board. If pipe <condenser/evaporator> temperature is exclusively low (in cooling mode) or high (in heating mode), refrigerant circuit may have defect. ⑤ Operate in test run mode and check pipe <condenser/evaporator> temperature with outdoor control circuit board. If there is extreme difference with actual pipe <condenser/evaporator> temperature, replace indoor controller board. There is no abnormality if none of above comes within the unit. Turn the power off and on again to operate. (In case of checking pipe temperature with outdoor controller circuit board, be sure to connect A-control service tool (PAC-SK52ST).)
PA	**Forced compressor stop (due to water leakage abnormality)** ① The unit has a water leakage abnormality when the following conditions, a) and b), are satisfied while the above-mentioned detection is performed. a) The intake temperature subtracted with liquid pipe temperature detects to be less than -10˚C[14˚F] for a total of 30 minutes. (When the drain sensor is detected to be NOT soaked in the water, the detection record of a) and b) will be cleared.) b) Drain float switch detects to be in the water for more than 15 minutes. *Once the water leakage abnormality is detected, abnormality state will not be released until the main power is reset.	① Drain pump trouble ② Drain defective · Drain pump clogging · Drain pipe clogging ③ Open circuit of float switch ④ Contact failure of float switch connector ⑤ Dew condensation on float switch ·Drain water descends along lead wire. ·Drain water waving due to filter clogging. ⑥ Extension piping connection difference at twin, triple, quadruple system. ⑦ Miswiring of indoor/outdoor connecting at twin, triple, quadruple system. ⑧ Room temperature thermistor/ liquid pipe temperature thermistor detection is defective.	① Check the drain pump. ② Check whether water can be drained. ③ Check the resistance of the float switch. ④ Check the connector contact failure. ⑤ Check the float switch leadwire mounted. Check the filter clogging. ⑥ Check the piping connection. ⑦ Check the indoor/outdoor connecting wires. ⑧ Check the room temperature display of remote controller. Check the indoor liquid pipe temperature display of outdoor controller board.
E0 or E4	**Remote controller transmission error(E0)/signal receiving error(E4)** ① Abnormal if main or sub remote controller cannot receive any transmission normally from indoor unit of refrigerant address “0” for 3 minutes. (Error code : E0) ② Abnormal if sub remote controller could not receive for any signal for 2 minutes. (Error code: E0) ① Abnormal if indoor controller board cannot receive any data normally from remote controller board or from other indoor controller board for 3 minutes. (Error code: E4) ② Indoor controller board cannot receive any signal from remote controller for 2 minutes. (Error code: E4)	① Contact failure at transmission wire of remote controller ② All remote controllers are set as “sub” remote controller. In this case, E0 is displayed on remote controller, and E4 is displayed at LED (LED1, LED2) on the outdoor controller circuit board. ③ Miswiring of remote controller ④ Defective transmitting receiving circuit of remote controller ⑤ Defective transmitting receiving circuit of indoor controller board of refrigerant addresses “0”. ⑥ Noise has entered into the transmission wire of remote controller.	① Check disconnection or looseness of indoor unit or transmission wire of remote controller. ② Set one of the remote controllers “main” if there is no problem with the action above. ③ Check wiring of remote controller. • Total wiring length: max. 500m[1640ft] (Do not use cable × 3 or more.) • The number of connecting indoor units: max. 16 units • The number of connecting remote controller: max. 2 units When the above-mentioned problem of ①~③ are not applied, ④ Diagnose remote controllers. a) When “RC OK” is displayed, remote controllers have no problem. Turn the power off, and on again to check. If abnormality generates again, replace indoor controller board. b) When “RC NG” is displayed, replace remote controller. c) When “RC E3” or “ERC 00-06” is displayed, noise may be causing abnormality. ❈ If the unit is not normal after replacing indoor controller board in group control, indoor controller board of address “0” may be abnormal.

Error Code	Abnormal point and detection method	Cause	Countermeasure
E3 or E5	**Remote controller transmission error(E3)/signal receiving error(E5)** ① Abnormal if remote controller could not find blank of transmission path for 6 seconds and could not transmit. (Error code: E3) ② Remote controller receives transmitted data at the same time, compares the data, and when detecting it, judges different data to be abnormal 30 continuous times. (Error code: E3) ① Abnormal if indoor controller board could not find blank of transmission path. (Error code: E5) ② Indoor controller board receives transmitted data at the same time, compares the data,and when detecting it, judges different data to be abnormal 30 continuous times. (Error code: E5)	① 2 remote controllers are set as "main." (In case of 2 remote controllers) ② Remote controller is connected with 2 indoor units or more. ③ Repetition of refrigerant address ④ Defective transmitting receiving circuit of remote controller ⑤ Defective transmitting receiving circuit of indoor controller board ⑥ Noise has entered into transmission wire of remote controller.	① Set a remote controller to main, and the other to sub. ② Remote controller is connected with only one indoor unit. ③ The address changes to a separate setting. ④~⑥ Diagnose remote controller. a) When "RC OK" is displayed, remote controllers have no problem. Turn the power off, and on again to check. When becoming abnormal again, replace indoor controller board. b) When "RC NG" is displayed, replace remote controller. c) When "RC E3" or "ERC 00-66" is displayed, noise may be causing abnormality.
E6	**Indoor/outdoor unit communication error (Signal receiving error)** ① Abnormal if indoor controller board cannot receive any signal normally for 6 minutes after turning the power on. ② Abnormal if indoor controller board cannot receive any signal normally for 3 minutes. ③ Consider the unit as abnormal under the following condition: When 2 or more indoor units are connected to an outdoor unit, indoor controller board cannot receive a signal for 3 minutes from outdoor controller circuit board, a signal which allows outdoor controller circuit board to transmit signals.	① Contact failure, short circuit or, miswiring (converse wiring) of indoor/outdoor unit connecting wire ② Defective transmitting receiving circuit of outdoor controller circuit board ③ Defective transmitting receiving circuit of indoor controller board ④ Noise has entered into indoor/outdoor unit connecting wire.	❊ Check LED display on the outdoor control circuit board. (Connect A-control service tool, PAC-SK52ST.) Refer to EA-EC item if LED displays EA-EC. ① Check disconnection or looseness of indoor/outdoor unit connecting wire of indoor unit or outdoor unit. Check all the units in case of twin indoor unit system. ②-④ Turn the power off, and on again to check. If abnormality generates again, replace indoor controller board or outdoor controller circuit board. ❊ Other indoor controller board may have defect in case of twin indoor unit system.
E7	**Indoor/outdoor unit communication error (Transmitting error)** Abnormal if indoor controller board receives "1" 30 times continuously when indoor controller board transmits "0" signal.	① Defective transmitting receiving circuit of indoor controller board ② Noise has entered into power supply. ③ Noise has entered into outdoor control wire.	①-③ Turn the power off, and on again to check. If abnormality generates again, replace indoor controller board.
Fb	**Indoor controller board** Abnormal if data cannot be read normally from the nonvolatile memory of the indoor controller board.	① Defective indoor controller board	① Replace indoor controller board.
E1 or E2	**Remote controller control board** ① Abnormal if data cannot be read normally from the nonvolatile memory of the remote controller control board. (Error code: E1) ② Abnormal if the clock function of remote controller cannot be operated normally. (Error code: E2)	① Defective remote controller	① Replace remote controller.

9-4. TROUBLESHOOTING BY INFERIOR PHENOMENA

Note: Refer to the manual of outdoor unit for the detail of remote controller.

Phenomena	Cause	Countermeasure
(1)Upward/downward vane performance failure	① The vane is not downward during defrosting and heat preparation and when the thermostat is OFF in HEAT mode. (Working of COOL protection function) ② Vane motor does not rotate. • Defective vane motor • Breaking of wire or connection failure of connector ③ Upward/downward vane does not work. • The vane is set to fixed position.	① Normal operation (The vane is set to horizontal regardless of remote control.) ② Check ② (left). • Check the vane motor. (Refer to “How to check the parts”.) • Check for breaking of wire or connection failure of connector. ③ Normal operation (Each connector on vane motor side is disconnected or setting the fixed vanes by wired remote controller.)
(2)Receiver for IR wireless remote controller	① Weak batteries of IR wireless remote controller ② Contact failure of connector (CNB) on IR wireless remote controller board (Insert failure) ③ Contact failure of connector (CN90) on indoor controller board (Insert failure) ④ Contact failure of connector between IR wireless remote controller board and indoor controller board	① Replace batteries of IR wireless remote controller. ②~④ Check contact failure of each connector. If no problems are found of connector, replace indoor controller board. When the same trouble occurs even if indoor controller board is replaced, replace IR wireless remote controller board.

9-5. EMERGENCY OPERATION

9-5-1. When IR wireless remote controller fails or its battery is exhausted

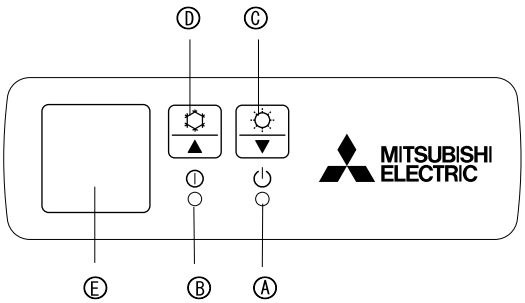

When the remote controller cannot be used

When the batteries of the remote controller run out or the remote controller malfunctions, the emergency operation can be done using the emergency buttons on the grille.

Ⓐ DEFROST/STAND BY lamp
Ⓑ Operation lamp
Ⓒ Emergency operation switch (heating)
Ⓓ Emergency operation switch (cooling)
Ⓔ Receiver

Starting operation

- To operate the cooling mode, press the button Ⓓ for more than 2 seconds.
- To operate the heating mode, press the button Ⓒ for more than 2 seconds.

* Lighting of the Operation lamp Ⓑ means the start of operation.

Note:

- **Details of emergency mode are as shown below.**

Operation mode	COOL	HEAT
Set temperature	24°C, 75°F	24°C, 75°F
Fan speed	High	High
Airflow direction	Horizontal	Downward 5

Stopping operation

- To stop operation, press the button Ⓓ or the button Ⓒ.

9-5-2. When wired remote controller or indoor unit microprocessor fails

1.When the wired remote control or the indoor unit microprocessor has failed, but all other components work properly, if you set the switch (SWE) on the indoor controller board ON, the indoor unit will begin emergency operation.
When emergency operation is activated, the indoor unit operates as follows:
(1)Indoor fan is running at high speed. (2)Drain pump is working. (option)

※ Note on the IR wireless remote control: when the remote control does not function, it is possible to activate emergency operation by using the indoor unit emergency operation switch (SW1, SW2 of the IR wireless signal receiver board).
However, if the indoor unit microprocessor has failed, it is necessary to proceed with points (2) and (3) below as in the case of the wired remote controller.

2.When you activate emergency operation of the cooling or heating, you have to set the switch (SWE) on the indoor controller board and activate emergency operation of the outdoor unit.
For details on how to activate emergency operation of the outdoor unit, refer to the outdoor unit wiring diagram.

3.Before you activate emergency operation, check the following points:
(1)Emergency operation cannot be activated when:
• the outdoor unit malfunctions. • the indoor fan malfunctions.
• when it has detected the malfunction of drain pump during self-diagnosing.
(2)Emergency operation becomes continuous only by switching the power source on/off.
ON/OFF on the remote control or temperature control etc. does not function.
(3)Avoid operating for a long time when the outdoor unit begins defrosting while emergency operation of the heating is activated because it will start to blow cold air.
(4)Emergency cooling should be limited to 10 hours maximum (The indoor unit heat exchanger may freeze).
(5)After emergency operation has been deactivated, set the switches etc. to their original positions.
(6)Movement of the vanes does not work in emergency operation, therefore you have to slowly set them manually to the appropriate position.

9-6. HOW TO CHECK THE PARTS

PCA-A24KA4.TH PCA-A30KA4.TH PCA-A36KA4.TH PCA-A42KA5.TH

Parts name	Check points
Room temperature thermistor (TH1) Liquid pipe thermistor (TH2) Condenser/evaporator temperature thermistor (TH5)	Disconnect the connector then measure the resistance with a tester. (At the ambient temperature 50°F–86°F) Normal: 4.3kΩ~9.6kΩ Abnormal: Open or short (Refer to the next page for a detail.)
Vane motor (MV) 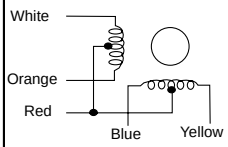 	Measure the resistance between the terminals with a tester. (At the ambient temperature of 68°F–86°F) Connector: Red - Yellow, Red - Blue, Red - Orange, Red - White Normal: 300Ω Abnormal: Open or short
Drain pump (DP) (Option) 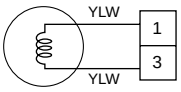 	Measure the resistance between the terminals with a tester. (Winding temperature 68°F) Normal: 290Ω Abnormal: Open or short
Drain float switch (FS) (Option) 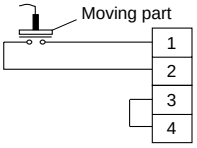 	Measure the resistance between the terminals with a tester. State of moving part: UP Normal: Short Abnormal: Other than short State of moving part: DOWN Normal: Open Abnormal: Other than open 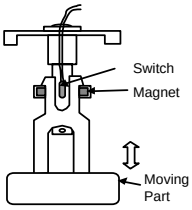
i-see sensor (Option) 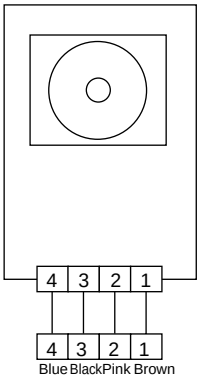 	①Turn on the indoor unit with the black plastic tape on the outside of i-see sensor controller board. ②i-see sensor rotates then pull out the connector of motor for i-see sensor. ③With electricity being turned on, measure the power voltage between connectors with tester. 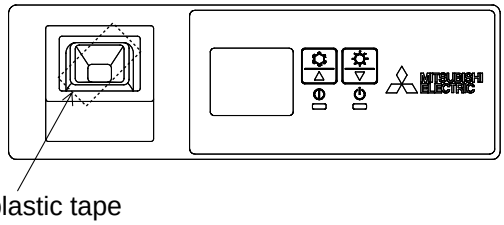 i-see sensor (At the ambient temperature of 50°F–104°F) i-see sensor connector: ②(–)—④(+) Normal: DC 1.857V – 3.132V Abnormal: Other than the normal i-see sensor connector: ①(+)—②(–) Normal: DC 0.939V – 1.506V Abnormal: Other than the normal **NOTE** : Be careful not to discharge static electricity into electronic device.
Vane motor for i-see sensor (Option) 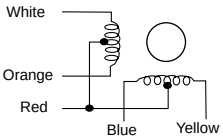 	Measure the resistance between the terminals with a tester. (At the ambient temperature of 68°F~86°F) Connector: Red - Yellow, Red - Blue, Red - Orange, Red - White Normal: 250Ω Abnormal: Open or short

9-6-1. Thermistor

<Thermistor Characteristic graph>

Thermistor for lower temperature	Room temperature thermistor (TH1) Pipe temperature thermistor/liquid (TH2) Condenser/evaporator temperature thermistor (TH5)

Thermistor R_0=15kΩ ± 3%
Fixed number of B=3480 ± 2%

$$t(^\circ C)Rt=15\exp\{3480(\frac{1}{273+t}-\frac{1}{273})\}$$

$$T(^\circ F)Rt=15\exp\{3480(\frac{1}{273+\frac{T-32}{1.8}}-\frac{1}{273})\}$$

0℃ (32˚F)	15kΩ
10℃ (50˚F)	9.6kΩ
20℃ (68˚F)	6.3kΩ
25℃ (77˚F)	5.4kΩ
30℃ (86˚F)	4.3kΩ
40℃ (104˚F)	3.0kΩ

<Thermistor for lower temperature>

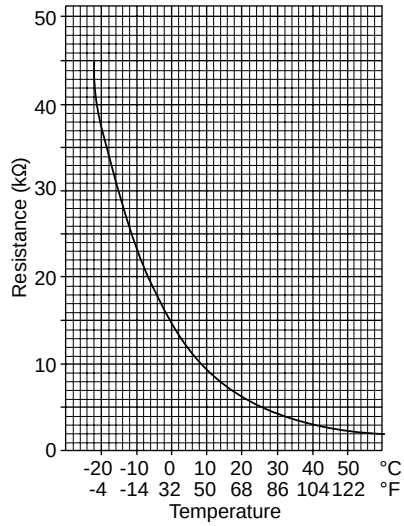

9-6-2. DC Fan motor (fan motor/indoor controller circuit board)

Check method of DC fan motor (fan motor/indoor controller circuit board)

① Notes
- High voltage is applied to the connecter (CNMF) for the fan motor. Pay attention to the service.
- Do not pull out the connector (CNMF) for the motor with the power supply on.
  (It causes trouble of the indoor controller circuit board and fan motor.)

② Self check
Symptom : The indoor fan cannot turn around.

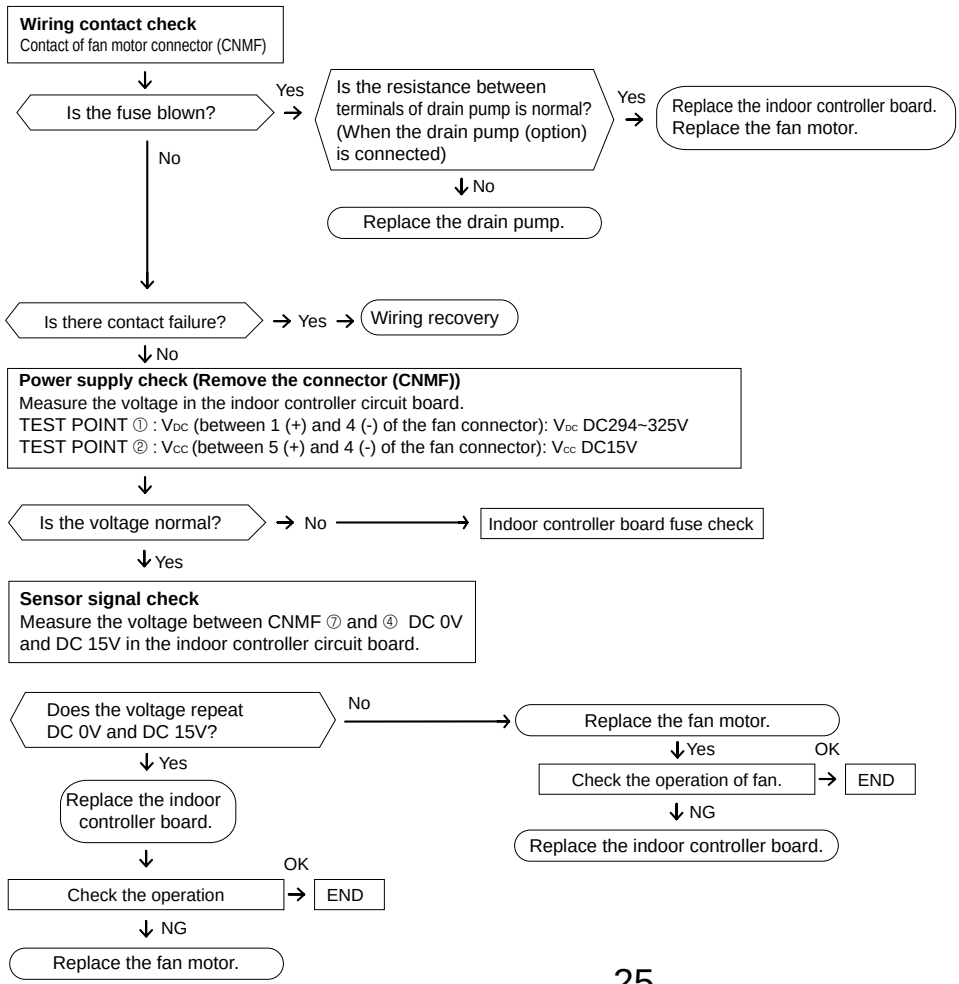

9-7. TEST POINT DIAGRAM

Indoor controller board

PCA-A24KA4.TH PCA-A30KA4.TH PCA-A36KA4.TH PCA-A42KA5.TH

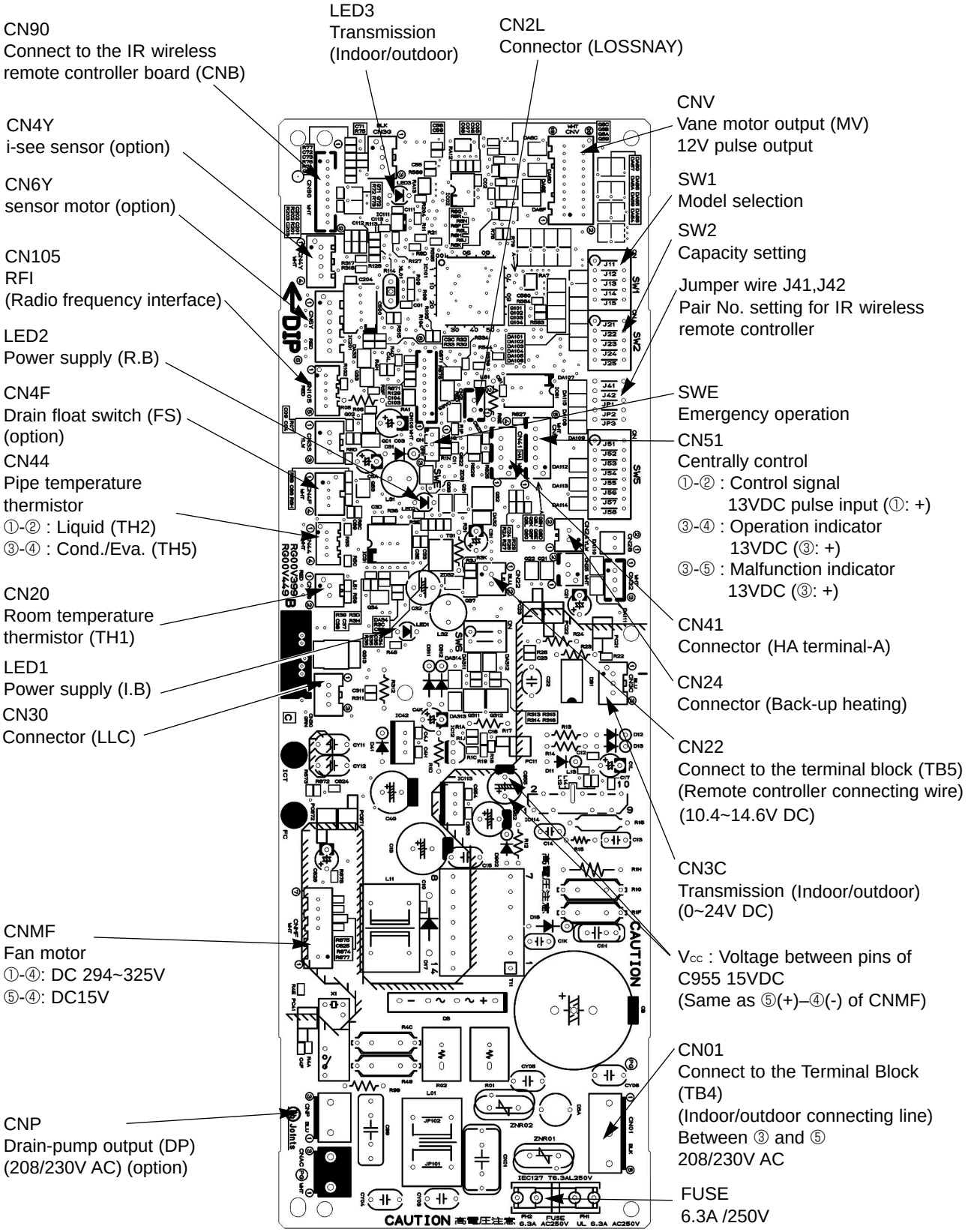

9-8. FUNCTIONS OF DIP SWITCH AND JUMPER WIRE

Each function is controlled by the dip switch and the jumper wire on control P.C. board.
SW1 and SW2 are equipped only for service parts.
Model setting and capacity setting are memorized in the nonvolatile memory of the control P.C. board of the unit.

The black square (■) indicates a switch position.

Jumper wire (○: Short ×: Open)

Jumper wire	Functions	Setting by the dip switch and jumper wire	Remarks
SW1	Model settings	For service board 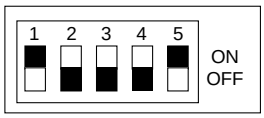 	
SW2	Capacity settings	MODELS / Service board PCA-A24KA4: 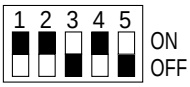 PCA-A30KA4: PCA-A36KA4: PCA-A42KA5:	
J41 J42	Pair number setting with IR wireless remote controller	Wireless remote controller setting / Control PCB setting 0: J41 ○, J42 ○ 1: J41 ×, J42 ○ 2: J41 ○, J42 × 3 ~ 9: J41 ×, J42 ×	<Initial setting> IR wireless remote controller: 0 Control PCB: ○ (for both J41 and J42) Four pair number settings are supported. The pair number settings of the wireless remote controller and indoor control PCB (J41/J42) are given in the table on the left. ('×' in the table indicates the jumper line is disconnected.)
JP1	Unit type setting	Model / JP1 Without TH5: ○ With TH5: ×	There is no jumper (JP1) because these models have the cond./eva. temperature thermistor (TH5).
JP3	Indoor controller board type setting	Indoor controller board type / JP3 For product: × Spare parts: ○	

10 SPECIAL FUNCTION

10-1. Rotation Function (and back-up function, 2nd stage cut-in function)

This function is only available when using wired remote controller.

10-1-1. Operation

(1) Rotation function (and Back-up function)

- **Outline of functions**
  - · Main and sub units operate alternately according to the interval of rotation setting.
  - ※ Main and sub unit should be set by refrigerant address. (Outdoor Dip switch setting)
    Refrigerant address "00" ⟶ Main unit
    Refrigerant address "01" ⟶ Sub unit
  - · When error occurs to one unit, another unit will start operation. (Back-up function)
- **System constraint**
  - · This function is available only by the grouping control system (INDOOR UNIT: OUTDOOR UNIT=1:1) of 2 refrigerant groups. (Refer to Fig. 1)
  - · Main indoor unit should be connected for wired remote controller and the transmission line (TB5) for main and sub unit should also be connected. (Refer to Fig. 1)
    (This function cannot be set by IR wireless remote controller.)
  - · Set refrigerant address of each unit. (Dip switch on the outdoor unit ··· Refrigerant address 00/01)

Operation pattern

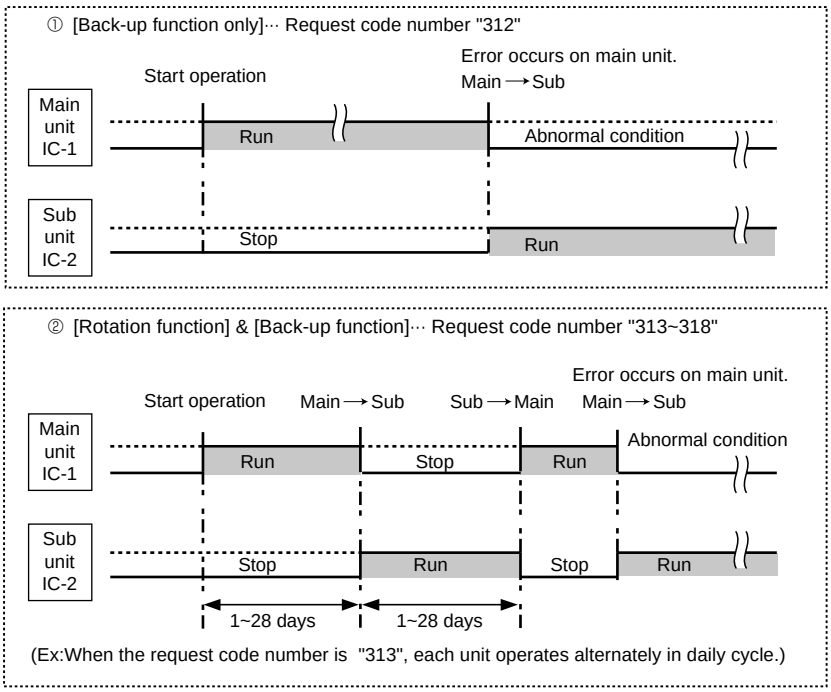

Fig. 1

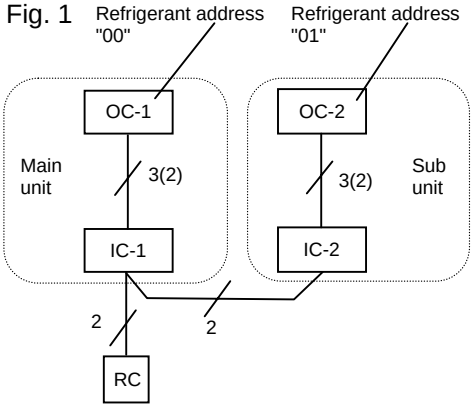

OC : Outdoor unit
IC : Indoor unit
RC : Wired remote controller

Note:
- · When the unit is restarted to operate after turning off the power or OFF operation, the unit which was operating will start operation.
- · To operate the main unit, refer to the 10-1-2. and set the request code No. which is not the same as the current one, and set again the former request code No.

(2) 2nd stage cut-in function

- **Outline of functions**
  - · When the 1st unit can NOT supply with sufficient capacity for exceptionally high-demand conditions and the actual room temperature reaches set point *, the 2nd unit starts operation in conjunction with the 1st unit.
  - · Once the actual room temperature goes down to 4 degrees C (7.5 degrees F) below set point*, the 2nd unit stops operation automatically.
    (* set point = set temperature by R/C (remote controller) + 4, 6, 8℃(7.5, 10.8, 14.4°F) (selectable))
  - · Number of operating units is determined according to the room temperature and set point.
  - · When room temperature becomes higher than set point, standby unit starts. (2 units operation)
  - · When room temperature falls below set point -4℃(-7.5°F), standby unit stops. (1 unit operation)

• **System constraint**

· This function is available only in cooling mode.

Ex.) Set temp. by R/C = 20℃ (68°F)
Set point = 26℃ (79°F)
When request code number is “323”.

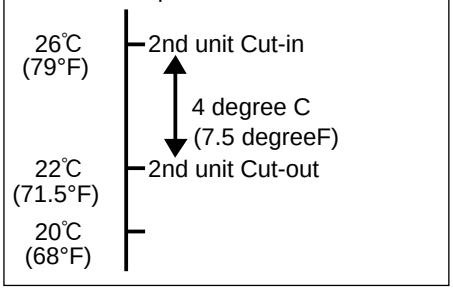

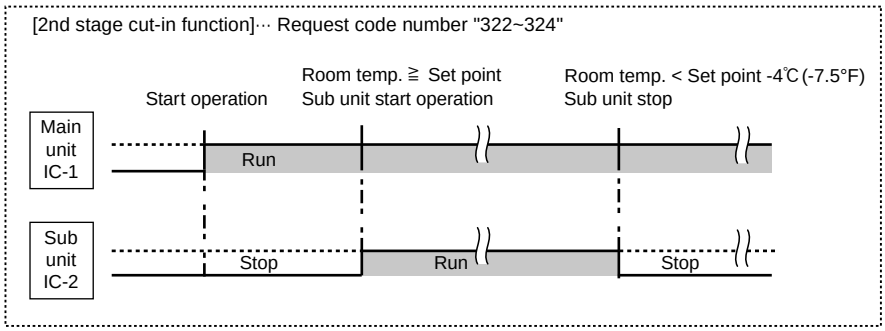

10-1-2. How to set rotation function (Back-up function, 2nd stage cut-in function)

You can set these functions by wired remote controller. (Maintenance monitor)

NOTE

Both main and sub unit should be set in same setting.
Every time replacing indoor controller board for servicing, the function should be set again.

(1) Request Code List

Rotation setting

Setting No. (Request code)	Setting contents	Initial setting
No.1 (310)	Monitoring the request code of current setting	
No.2 (311)	Rotation and Back-up OFF (Normal group control operation)	◎
No.3 (312)	Back-up function only	
No.4 (313)	Rotation ON (Alternating interval = 1day) and back up function	
No.5 (314)	Rotation ON (Alternating interval = 3day) and back up function	
No.6 (315)	Rotation ON (Alternating interval = 5day) and back up function	
No.7 (316)	Rotation ON (Alternating interval = 7day) and back up function	
No.8 (317)	Rotation ON (Alternating interval = 14day) and back up function	
No.9 (318)	Rotation ON (Alternating interval = 28day) and back up function	

2nd stage cut-in setting

Setting No. (Request code)	Setting contents	Initial setting
No.1 (320)	Monitoring the request code of current setting	
No.2 (321)	Cut-in function OFF	◎
No.3 (322)	Cut-in Function ON(Set point = Set temp.+ 4°C(7.5°F))	
No.4 (323)	Cut-in Function ON(Set point = Set temp.+ 6°C(10.8°F))	
No.5 (324)	Cut-in Function ON(Set point = Set temp.+ 8°C(14.4°F))	

(2) Setting method of each function by wired remote controller

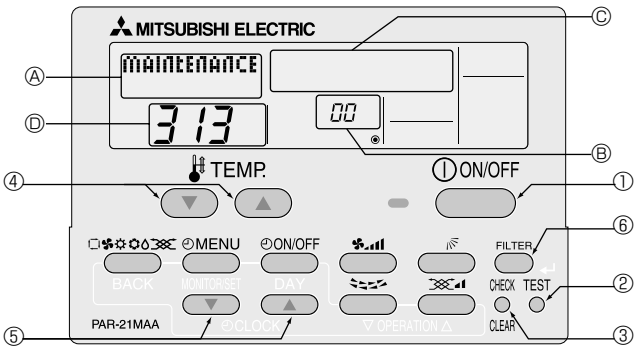

B: Refrigerant address
C: Data display area
D: Request code display area

1. Stop operation(①).

2. Press the (TEST) button (②) for 3 seconds so that [Maintenance mode] appears on the screen (Ⓐ).
   After a while, [00] appears in the refrigerant address number display area.(at Ⓑ)

3. Press the (CHECK) button (③) for 3 seconds to switch to [Maintenance monitor].
   Note) It is not possible to switch to [Maintenance monitor] during data request in maintenance mode
   (i.e., while "----" is blinking) since no buttons are operative.

   [----] appears on the screen (Ⓓ) when [Maintenance monitor] is activated.
   (The display (Ⓓ) now allows you to set a request code No.)

4. Press the [TEMP (▽ and △)] buttons (④) to select the desired refrigerant address.

   [ScreenB] → 00 ⟷ 01 ⟷ ····· ⟷ 15 ←

5. Press the [CLOCK (▽ and △)] buttons (⑤) to set the desired request code No.("311~318", "321~324")

6. Press the (FILTER) button (⑥) to perform function setting.
   If above setting operations are done correctly, "Request code number" will appear in data display area.(Ⓒ)
   [Example: When the "311" of "Request code number" is set, [311] appears on the screen.(Ⓒ)]

[Refererence]
You can check current "request code number" setting by setting the "request code number"("310" or "320") and pressing the (FILTER) button.(⑥)
[Example: When the current setting is "Setting No.2(Request code 311)", [311] appears on the screen.(Ⓒ)]

7. To return to normal mode, press the (ON/OFF) button (①).

10-2. BACK-UP HEATING FUNCTION (CN24)

10-2-1. Operation

Outline of functions

The back-up heater signal is sent out according to the temperature difference between indoor room temperature and set temperature. This function is available only in heating operation.

	Temperature difference (Z=Set temp. - Room temp.)	Back-up heater signal output
1	Z ≦ 0˚C(˚F)	OFF
2	0 < Z < 2.5˚C(4.5˚F)	Keeping condition
3	2.5˚C(4.5˚F) ≦ Z	ON

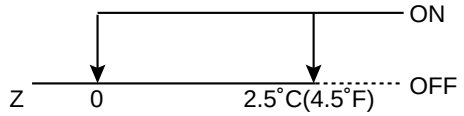

10-2-2. How to connect

When connecting to the connector CN24 of the indoor unit, use PAC-SE56RA-E (optional parts).

11 DISASSEMBLY PROCEDURE

PCA-A24KA4.TH **PCA-A30KA4.TH**
PCA-A36KA4.TH **PCA-A42KA5.TH**

Be careful when removing heavy parts.

(Photo: **PCA-A36KA4**)

OPERATING PROCEDURE

1. Removing the air intake grille

(1) Slide the air intake grille holding knobs (at 2 or 3 locations) to the rear to open the air intake grille. (See Figure 1)
(2) While the air intake grille left open, push the stoppers on the rear hinges (at 2 or 3 locations) to pull out the air intake grille. (See Figure 2)

Figure 2

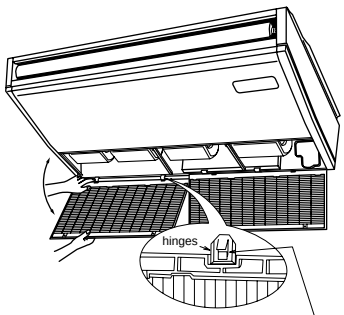

Pull out the air intake grille

PHOTOS & ILLUSTRATIONS

Figure 1

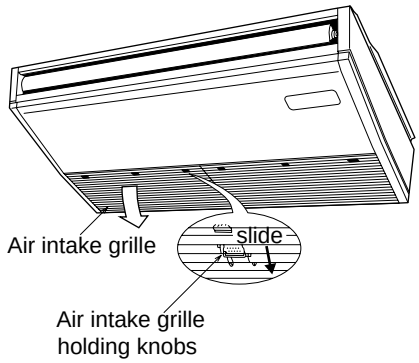

2. Removing the indoor controller board and the electrical box

(1) Remove the air intake grille. (See Figure 1, 2)
(2) Remove the beam by removing 1 screw (4 × 8 PT) (See Photo 1)
(3) Remove 2 screws from the electrical cover, and remove the electrical cover.
(4) Remove 2 screws from the electrical box and pull the electrical box downward.
Temporarily secure the electrical box using 2 hooks in the back of electrical box.
(5) Disconnect the connectors on the indoor controller board.

[Removing the electrical box]
(6) Disconnect the wires from the terminal blocks and pull out the electrical box. (See Photo 2)

[Removing the indoor controller board]
(6) Remove the 6 supports from the indoor controller board and remove the indoor controller board. (See Photo 3)

Photo 1

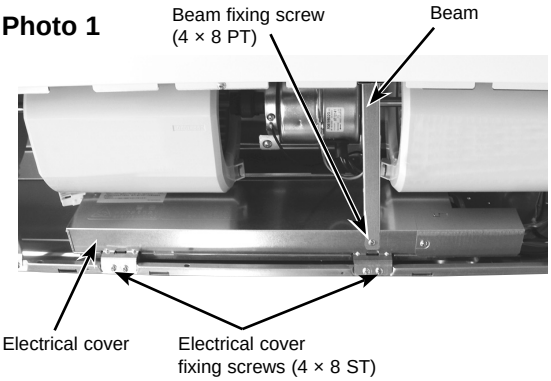

Photo 2

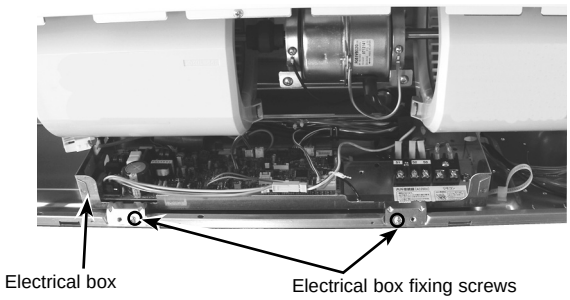

Photo 3

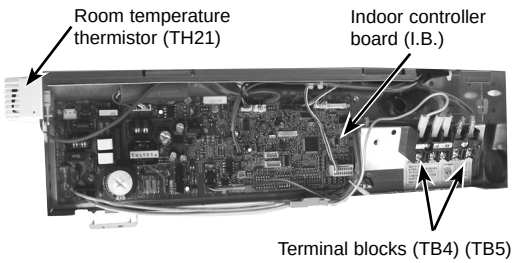

OPERATING PROCEDURE	PHOTOS & ILLUSTRATIONS
3. Removing the room temperature thermistor (TH1) (1) Remove the air intake grille. (See Figure 1, 2) (2) Remove the beam by removing 1 screw (4 × 8 PT) (See Photo 1) (3) Remove 2 screws from the electrical cover, and remove the electrical cover. (4) Remove 2 screws from the electrical box and pull the electrical box downward. Temporarily secure the electrical box using 2 hooks in the back of electrical box. (5) Disconnect the connector CN20 (red) from the indoor controller board. (6) Remove the sensor holder from the electrical box and remove the thermistor from the holder.	**Photo 4** 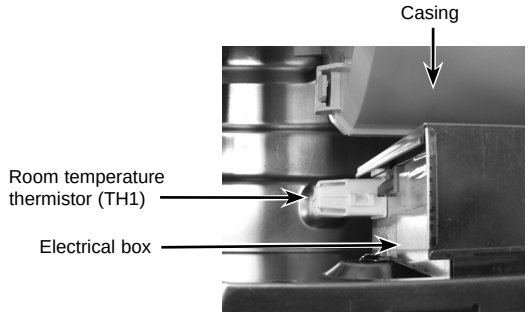
4. Removing the fan motor and right side fan (1) Remove the air intake grille. (See Figure 1, 2) (2) Remove the beam by removing 1 screw (4 × 8 PT) (See Photo 1) (3) Remove 2 screws from the electrical cover, and remove the electrical cover. (4) Remove 2 screws from the electrical box and pull the electrical box downward. (5) Temporarily secure the electrical box using 2 hooks in the back of electrical box. (6) Remove the lower casing while pressing the 4 catches of the casing (right side of the fan motor). (See Photo 6) (7) Loosen the 2 set screws (2 hexagon set screws) of connecting joint and slide the fan motor to the left. (See Photo 5) (8) Remove the screw for motor earth wire. (See Photo 5) (9) Remove the motor piece (left and right, each 1 screw). (See Photo 5) (10) Remove the fan motor and right side fan together. (11) Loosen the set screw (hexagon set screw) of fan and remove the fan from the shaft. (See Photo 7, 8)	**Photo 5** 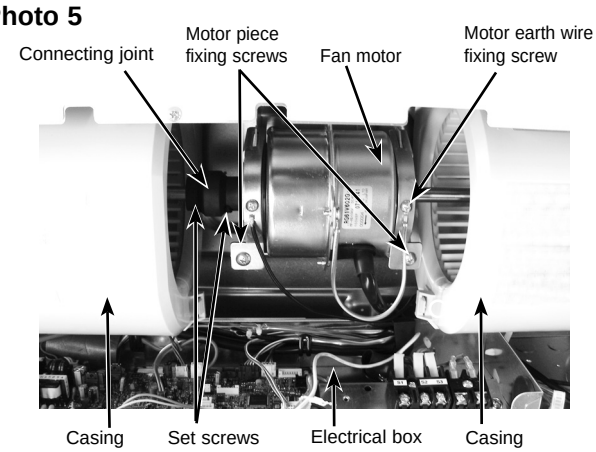 **Photo 6** 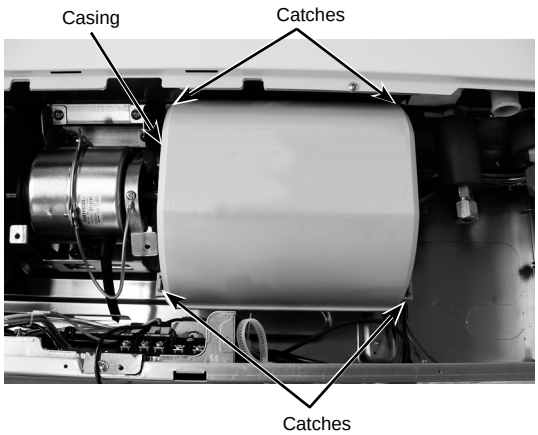 **Photo 7** 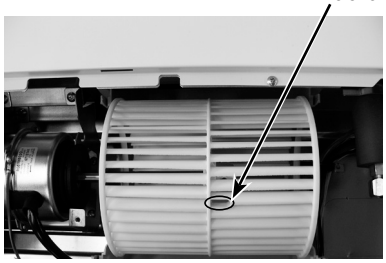 **Photo 8** 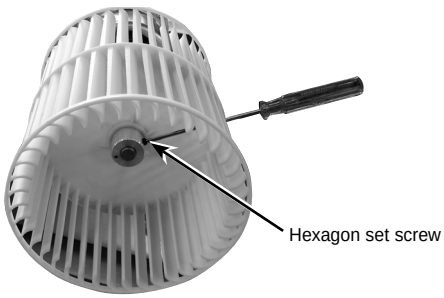

OPERATING PROCEDURE	PHOTOS & ILLUSTRATIONS
5. Removing the fan (3 connection) (1) Remove the air intake grille. (See Figure 1, 2) (2) Remove the beam by removing 1 screw (4 × 8 PT) (See Photo 1) (3) Remove 2 screws from the electrical cover, and remove the electrical cover. (4) Remove 2 screws from the electrical box and pull the electrical box downward. Temporarily secure the electrical box using 2 hooks in the back of electrical box. (5) Remove 2 screws from the left side beam and remove the beam. (See Photo 9) (6) Loosen 2 set screws (2 hexagon set screws) of connecting joint. (See Photo 5) (7) Remove 3 lower casings while pressing each 4 catches of the casing. (See Photo 6) (8) Remove the 4 screws from the bearing support. (See Photo 10) (9) Slide the connecting joint to the left and remove the fans and shaft together. (See Photo 11) (10) Remove the fans from the shaft. (See Photo 7,8)	**Photo 9** 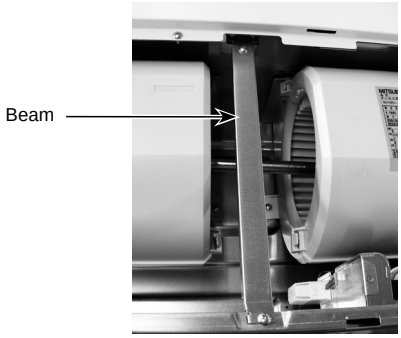 **Photo 10** 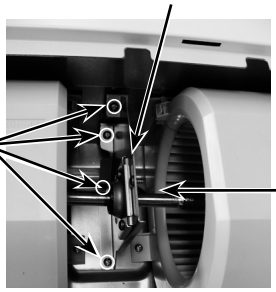
Photo 11 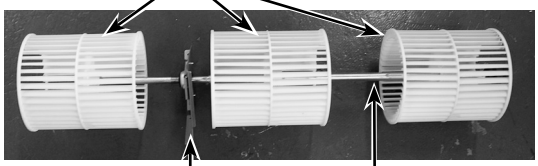 	
6. Removing the side panel (1) Remove the air intake grille. (See Figure 1, 2) (2) Remove the screws from the side panel, and remove the side panel by sliding the panel to the front. (3) Unhook the side panel support hanger, and then slide the side panel forward to remove it.	**Figure 3** 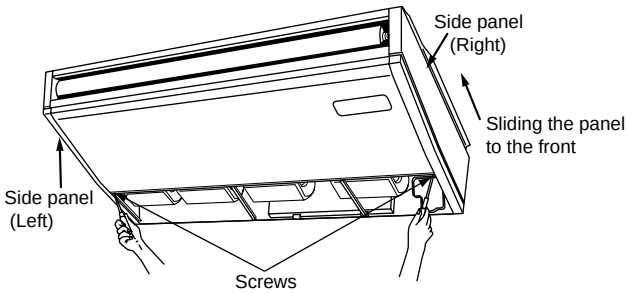 **Figure 4** 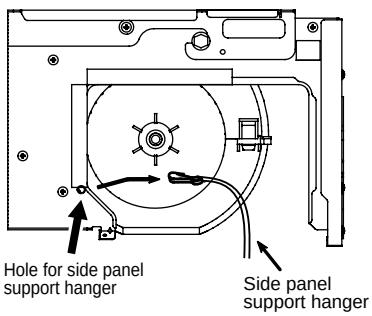

OPERATING PROCEDURE	PHOTOS & ILLUSTRATIONS
7. Removing the vane motor (1) Remove the air intake. (See Figure 1, 2) (2) Remove the right side panel. (See Figure 3, 4) (3) Remove the connector of vane motor. (4) Remove 2 screws of vane motor cover, then remove vane motor.	**Photo 12** 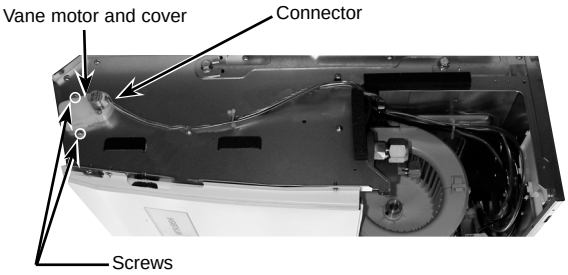
8. Removing the under panel (1) Remove the air intake grille. (See Figure 1, 2) (2) Remove the left and right side panels. (See Figure 3, 4) (3) Remove the beam. (See Photo 1) (4) Remove the electrical cover. (See Photo 1) (5) Pull the electrical box downward. (See Photo 2) (6) (Wireless remote controller receiver type only) Disconnect the connector CNB from the PCB for wireless remote controller and remove the clamp and strap for wires. (7) Remove 8 screws from the under panel. (8) Move the under panel forward by about 7/16 in. (10 mm) and remove the under panel.	**Photo 13** 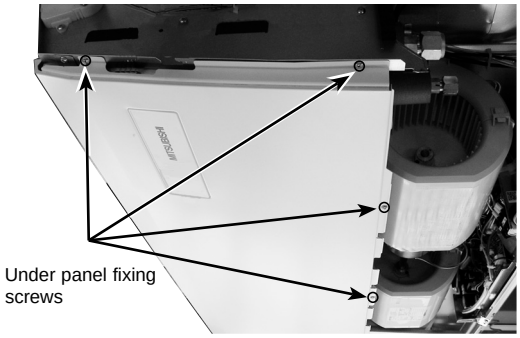
9. Removing the drain pan (1) Remove the air intake grille. (See Figure 1,2) (2) Remove the side panel (right and left). (See Figure 3, 4) (3) Remove the under panel. (See Photo 13) Remove the screws of the right and left side drain pan. (See Photo 14) (4) Remove 2 insulation in centre of the drain pan, and after removing 2 screws with washer, remove the drain pan. (See Photo 15,16) (Note) Please be aware that there might be some drainage left in the drain pan when you remove the drain pan.	**Photo 14** 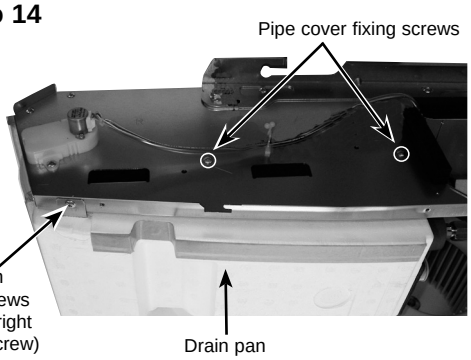 **Photo 15** 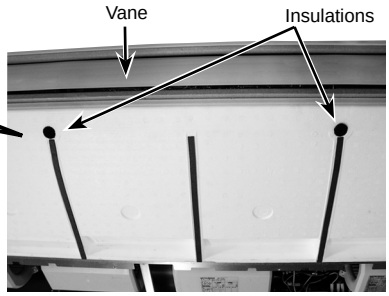 **Photo 16** 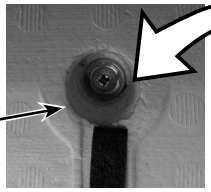

OPERATING PROCEDURE	PHOTOS & ILLUSTRATIONS
10. Removing the thermistors/Liquid pipe (TH2) and condenser/evaporator (TH5) (1) Remove the air intake grille. (See Figure 1, 2) (2) Remove the left and right side panels. (See Figure 3, 4) (3) Remove the under panel. (See Photo 13) (4) Remove the drain pan. (See Photo 14, 15, 16) (5) Disconnect the connector CN44 (white) from the indoor controller board. (6) Remove 6 screws from the pipe cover and remove the pipe cover. (See Photo 14, 17) (7) Remove the fastener for wires and remove the thermistors (TH2 and TH5) from each holder. (See Photo 18)	**Photo 17** 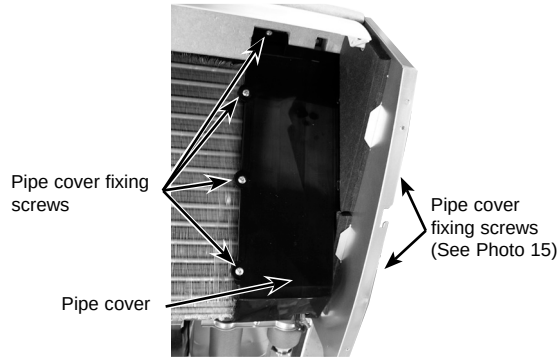 **Photo 18** 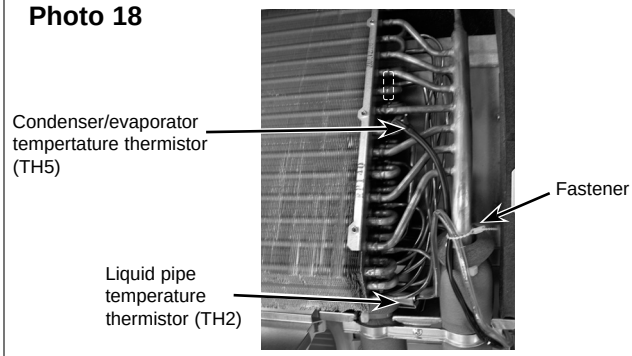
11. Removing the guide vane (1) Remove the intake grille. (See Figure 1, 2) (2) Remove the side panel (right and left). (See Figure 3, 4) (3) Remove the under panel. (See Photo 13) (4) Remove the drain pan. (See Photo 14, 15, 16) (5) Remove the screw from the guide vane, then remove the guide vane.	**Photo 19** 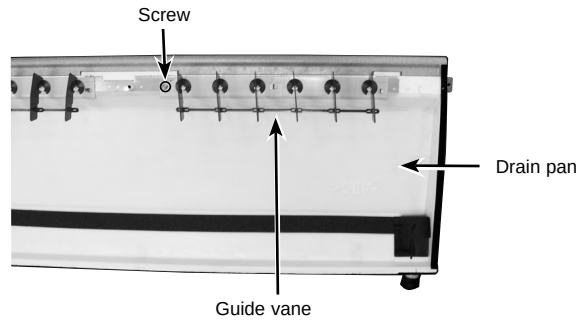
12. Removing the Auto vane (1) Remove the intake grille. (See Figure 1, 2) (2) Remove the right side panel. (See Figure 3, 4) (3) Remove the vane motor and cover. (See Photo 12) (4) Slide the auto vane to the vane motor side. (5) Remove 2 axes from each vane support pushing the vane support to the vane sleeve side.	**Photo 20** 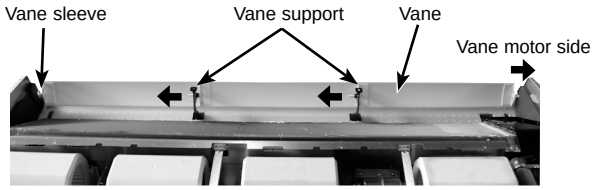

OPERATING PROCEDURE	PHOTOS & ILLUSTRATIONS
13. Removing the heat exchanger (1) Remove the air intake grille. (See Figure 1, 2) (2) Remove the left and right side panels. (See Figure 3, 4) (3) Remove the under panel. (See Photo 13) (4) Remove the drain pan. (See Photo 14, 15, 16) (5) Remove the pipe cover. (See Photo 17) (6) Remove the pipe thermistors (TH2 and TH5) from each holder. (See Photo 18) (7) Remove the pipe band fixing screw and remove the pipe band. (See Photo 21) (8) Remove 3 screws from the heat exchanger and remove the heat exchanger. (See Photo 22) **<Caution>** **To avoid falling of the heat exchanger, be sure to hold the heat exchanger by hand. For safety reasons, this procedure must be performed by two persons.**	**Photo 21** 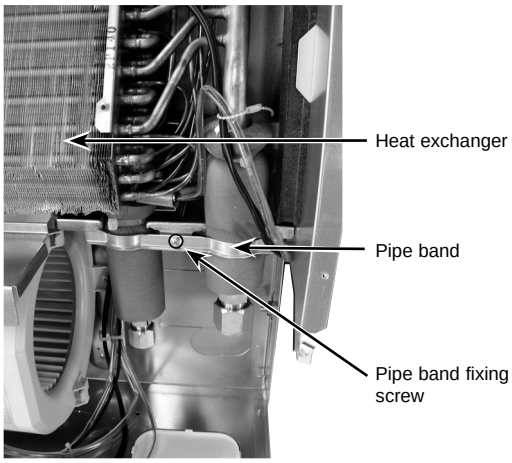 **Photo 22** 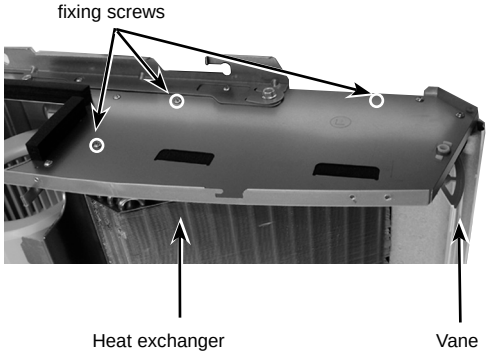

MITSUBISHI ELECTRIC CORPORATION

HEAD OFFICE : TOKYO BLDG., 2-7-3, MARUNOUCHI, CHIYODA-KU, TOKYO 100-8310, JAPAN

©Copyright 2012 MITSUBISHI ELECTRIC CORPORATION

Distributed in Mar. 2012 No.OCH501
Made in Japan

New publication, effective Mar. 2012
Specifications are subject to change without notice.