SERVICE PARTS LIST FOR MITSUBISHI ELECTRIC PACKAGED AIR-CONDITIONERS

Series : PEA-A•AA.TH

REVISED

Jan. 2017

BWE0811C

INDEX
PEA-A12AA.TH PEA-A18AA.TH

Part information update day : 2017/01/12

Please change the old catalog (issued Sept. 2010, No.BWE0811B) to this new catalog.
Content of revision : Some of parts are changed.

EXTERNAL PARTS

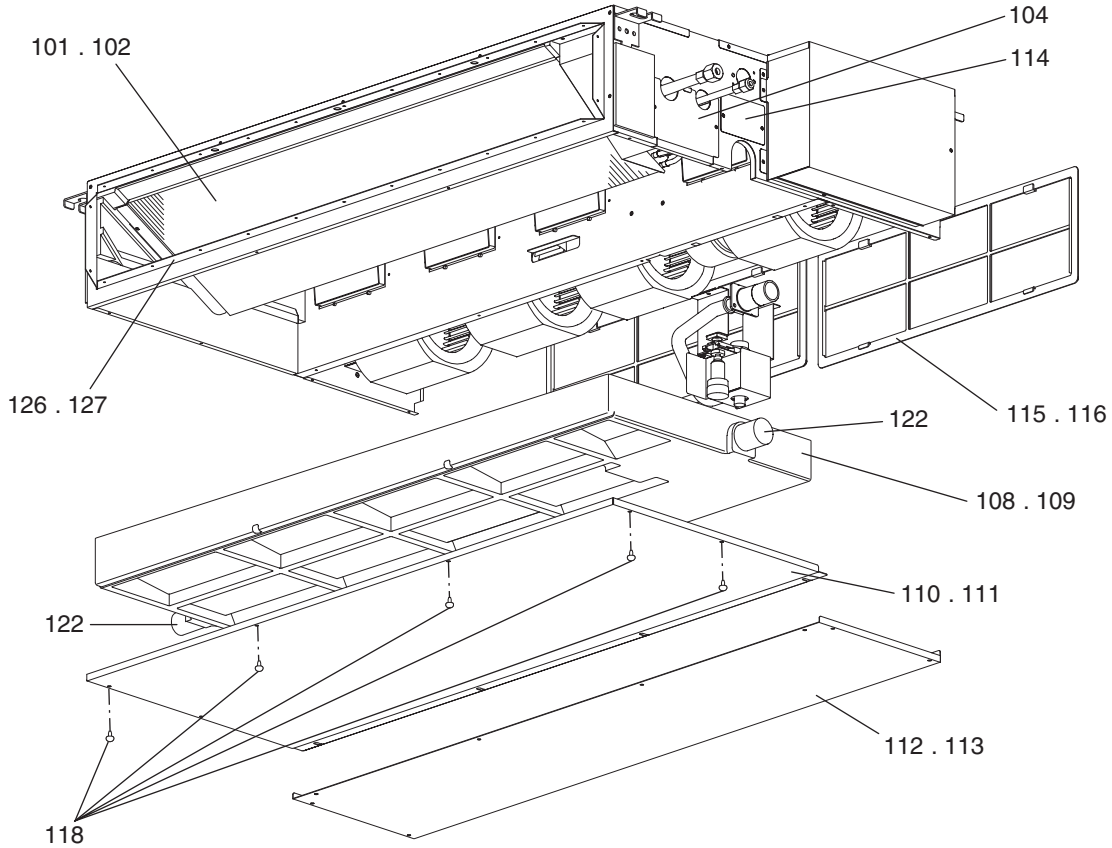

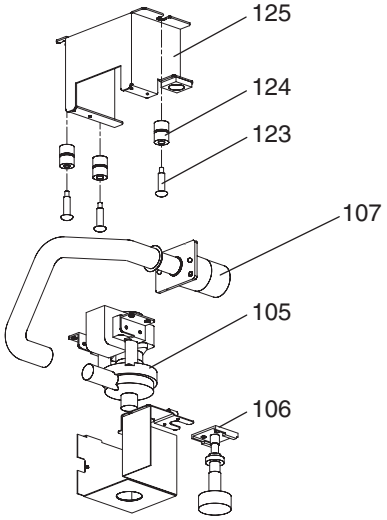

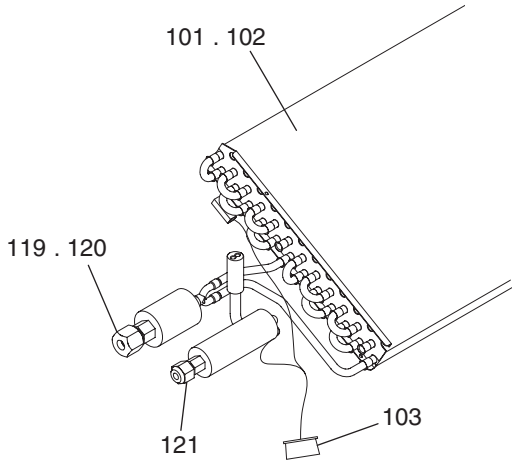

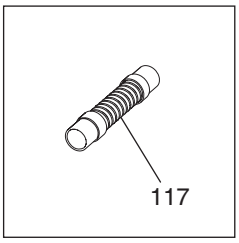

EXTERNAL PARTS

No.	Part No.	G : RoHS Apply Only W : RoHS Apply by Running Change	Part Name	Spec.	PEA-A12AA.TH	PEA-A18AA.TH					Dwg. No.	Notes for the models	Revision info.
101	E17 320 620	G	HEAT EXCHANGER		1						KB00A076B01	<K35>	
102	E17 326 620	G	HEAT EXCHANGER			1					KB00A078B03	<K60>	
103	E17 319 307	G	THERMISTOR		1	1					RG71V202G01		
104	E17 319 690	G	COVER PIPE ASSY		1	1					KB00H214G02		
105	E17 409 355	G	PUMP	PLD	1	1					KB56B515H02		
106	E17 409 145	G	FLOAT SWITCH		1	1					BH68C952H02		
107	E17 409 704	G	SOCKET ASSY		1	1					KB00G754G01		
108	E17 475 700	G	DRAIN PAN M ASSY		1						KB00G775G17		
109	E17 477 700	G	DRAIN PAN L ASSY			1					KB00G775G18		
110	E17 475 717	G	PANEL UNDER 1 M ASSY		1						KB00G776G11		
111	E17 477 717	G	PANEL UNDER 1 L ASSY			1					KB00G776G12		
112	E17 320 718	G	PANEL UNDER 2 M		1						KB02B457G01		
113	E17 326 718	G	PANEL UNDER 2 L			1					KB02A071G02		
114	E17 409 690	G	COVER ASSY		1	1					KB00H222G03		
115	E17 320 100	G	FILTER 40		1						KB35B207G02		
116	E17 326 100	G	FILTER 63			2					KB35B208G02		
117	E17 319 702	G	DRAIN HOSE		1	1					KB27T150H01		
118	E17 319 250	G	SCREW ASSY		5	5					KB12H389G01		
119	E17 321 660	G	NUT FLARE	1/2		1					BG12S008H01		
120	E17 319 660	G	NUT FLARE	3/8	1						Z211A143H06		
121	E17 320 660	G	NUT FLARE	1/4	1	1					Z211A143H01		
122	E17 414 524	G	PLUG	RUBBER	2	2					KB26H049H01		
123	E17 548 250	G	SCREW SPECIAL	M4×6	3	3					Z003Z333H05		
124	DB26F013L01	G	CUSHION		3	3					DB26F013L01		
125	KB00M769G02	G	ATTACHMENT PUMP		1	1					KB00M769G02		
126	E17 529 800	G	PANEL DUCT M ASSY		1						KB00G751G08		
127	E17 531 800	G	PANEL DUCT L ASSY			1					KB00G751G09		

BLOWER PARTS (1)

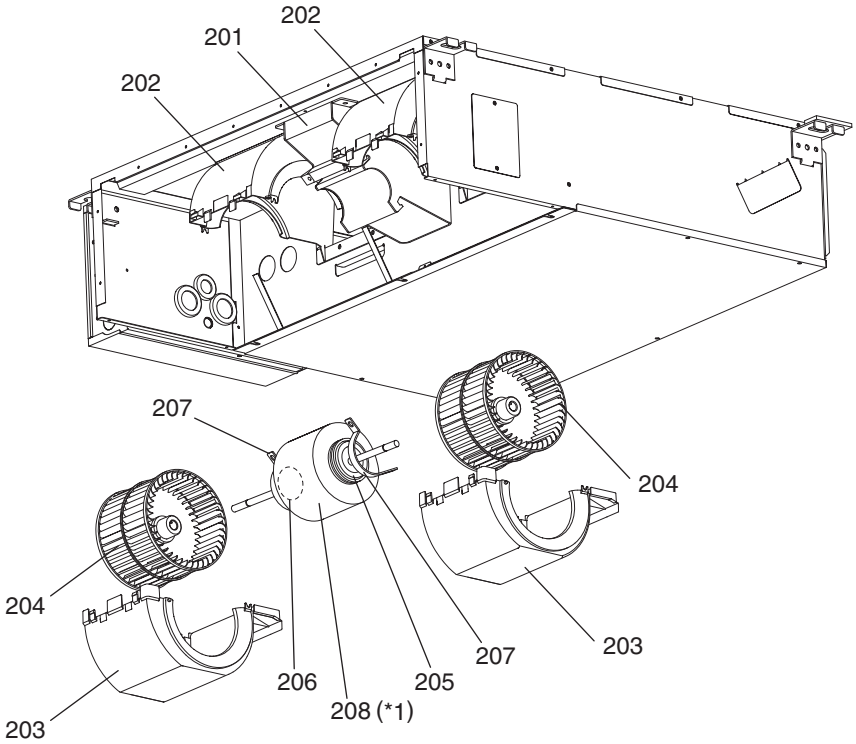

*1 Motor (Parts No.208) comes with rubber mounts.

BLOWER PARTS (1)

No.	Part No.	G : RoHS Apply Only W : RoHS Apply by Running Change	Part Name	Spec.	PEA-A12AA.TH						Dwg. No.	Notes for the models	Revision info.
201	E17 319 128	G	MOTOR BASE		1						KB02B464G02		
202	E17 319 129	G	FAN CASE A ASSY		2						KB00G773G03		
203	E17 320 129	G	FAN CASE B ASSY		2						KB00G774G03		
204	E17 319 500	G	SIROCCO FAN ASSY		2						KB00H341G01		
205	E17 C45 505	G	RUBBER MOUNT A		1						KJ31H007H01		Chg.
206	E17 C46 505	G	RUBBER MOUNT B		1						KJ31H008H01		Chg.
207	KB02H047G02	G	ATTACHMENT		2						KB02H047G02		
208	E17 C45 300	G	MOTOR	SIC-70CW-D8114-1E	1						KS00T859G06	*1 Includes rubber mounts	Chg.

BLOWER PARTS (2)

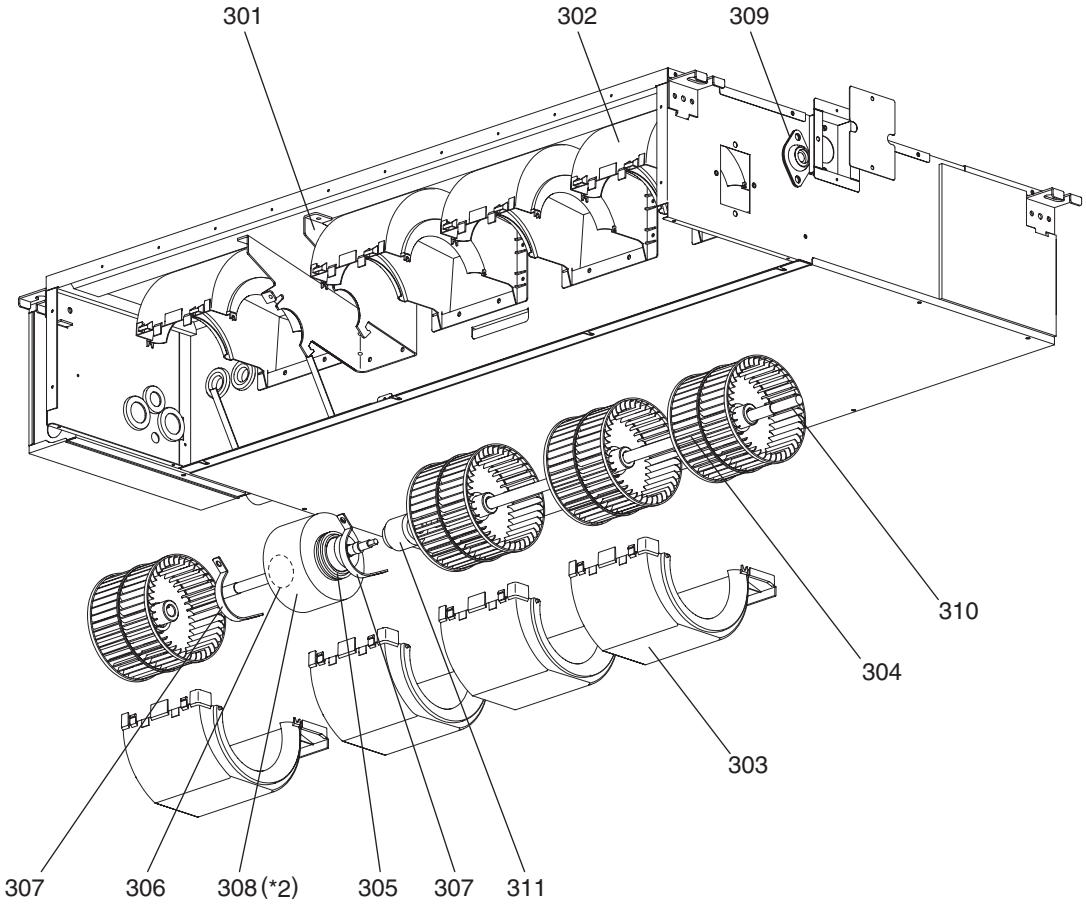

*2 Motor (Parts No.308) comes with rubber mounts.

BLOWER PARTS (2)

No.	Part No.	G : RoHS Apply Only W : RoHS Apply by Running Change	Part Name	Spec.	PEA-A18AA.TH						Dwg. No.	Notes for the models	Revision info.
301	E17 319 128	G	MOTOR BASE		1						KB02B464G02		
302	E17 319 129	G	FAN CASE A ASSY		4						KB00G773G03		
303	E17 320 129	G	FAN CASE B ASSY		4						KB00G774G03		
304	E17 319 500	G	SIROCCO FAN ASSY		4						KB00H341G01		
305	E17 C45 505	G	RUBBER MOUNT A		1						KJ31H007H01		Chg.
306	E17 C46 505	G	RUBBER MOUNT B		1						KJ31H008H01		Chg.
307	KB02H047G02	G	ATTACHMENT		2						KB02H047G02		
308	E17 C46 300	G	MOTOR	SIC-70CW-D896-2E	1						KS00T859G07	*2 Includes rubber mounts	Chg.
309	E17 321 509	G	BEARING		1						KB58C793G01		
310	E17 326 499	G	SHAFT 4FAN		1						KB10B486H03		
311	E17 321 518	G	FAN JOINT ASSY		1						KB00R475G01		

CONTROL BOX PARTS

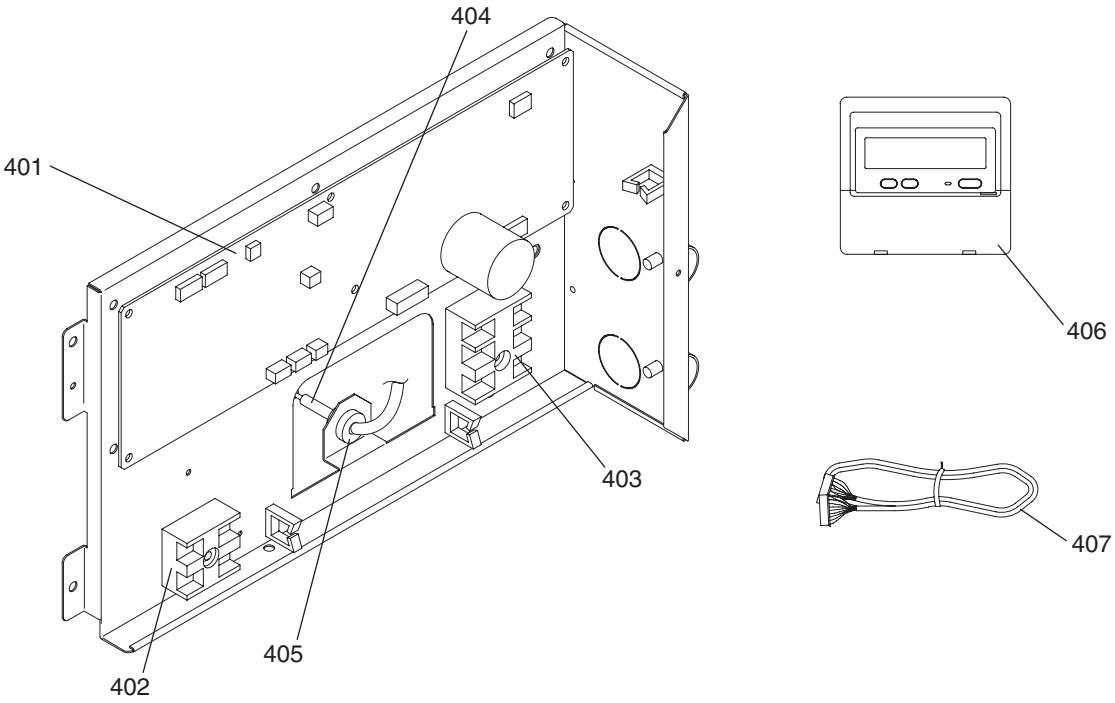

CONTROL BOX PARTS

No.	Part No.	G : RoHS Apply Only W : RoHS Apply by Running Change	Part Name	Spec.	PEA-A12AA.TH	PEA-A18AA.TH					Dwg. No.	Notes for the models	Revision info.
401	E17 528 447	G	PRINTED CIRCUIT ASSEMBLY	INDOOR	1	1					KE01D279B02		
402	E17 156 375	G	TERMINAL BLOCK ASSY		1	1					BG00R200G62		
403	E17 162 375	G	TERMINAL BLOCK ASSY		1	1					BH00C267G02		
404	E17 319 308	G	THERMISTOR S	250XAP	1	1					RG71J628H01		
405	E17 319 013	G	BUSH	SRB-R-2	1	1					KB32K138H01		
406	E17 528 426	G	REMOTE CONTROLLER		1	1					KF00D079H01		
407	E17 018 089	G	CABLE	REMOTE CONTROLLER	1	1					BB78K214G05		

MITSUBISHI ELECTRIC CORPORATION

BWE0811C (20170131)