MITSUBISHI ELECTRIC

Changes for the Better

SPLIT-TYPE, HEAT PUMP AIR CONDITIONERS

2015

R410A

TECHNICAL & SERVICE MANUAL

Series PEA Ceiling Concealed

Model name
<Indoor unit>

PEA-A12AA(4), (6)
PEA-A18AA(4), (6)

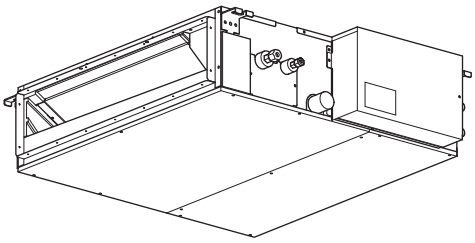

INDOOR UNIT

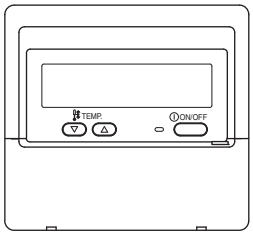

WIRED REMOTE CONTROLLER

Mr.SLIM™

CONTENTS

1. PART NAMES AND FUNCTIONS ····· 2
2. SPECIFICATIONS ····· 4
3. OUTLINES AND DIMENSIONS ····· 9
4. WIRING DIAGRAM ····· 10
5. REFRIGERANT SYSTEM DIAGRAM ····· 12
6. HEATER CONTROL ····· 13
7. TROUBLESHOOTING ····· 16
8. DISASSEMBLY PROCEDURE ····· 29

1 PART NAMES AND FUNCTIONS

Indoor Unit
PEA-A12AA(4), (6)
PEA-A18AA(4), (6)

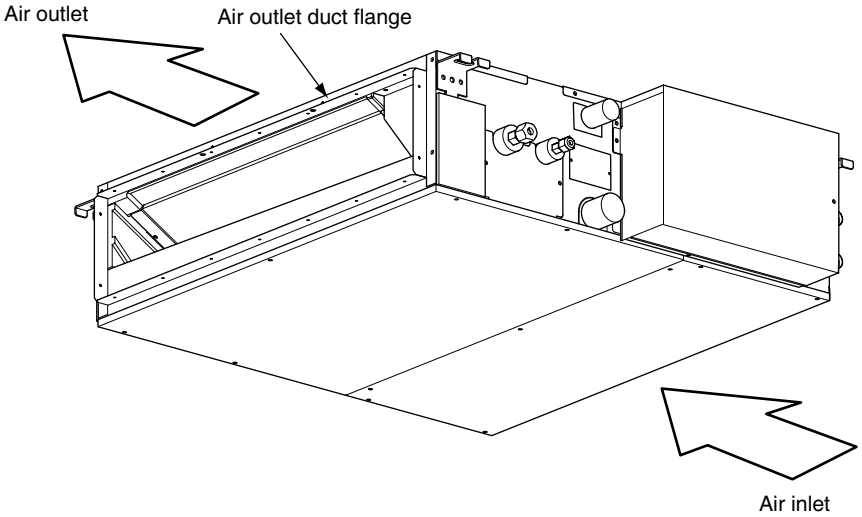

Wired remote controller

Once the controls are set, the same operation mode can be repeated by simply pressing the ON/OFF button.

● Operation buttons

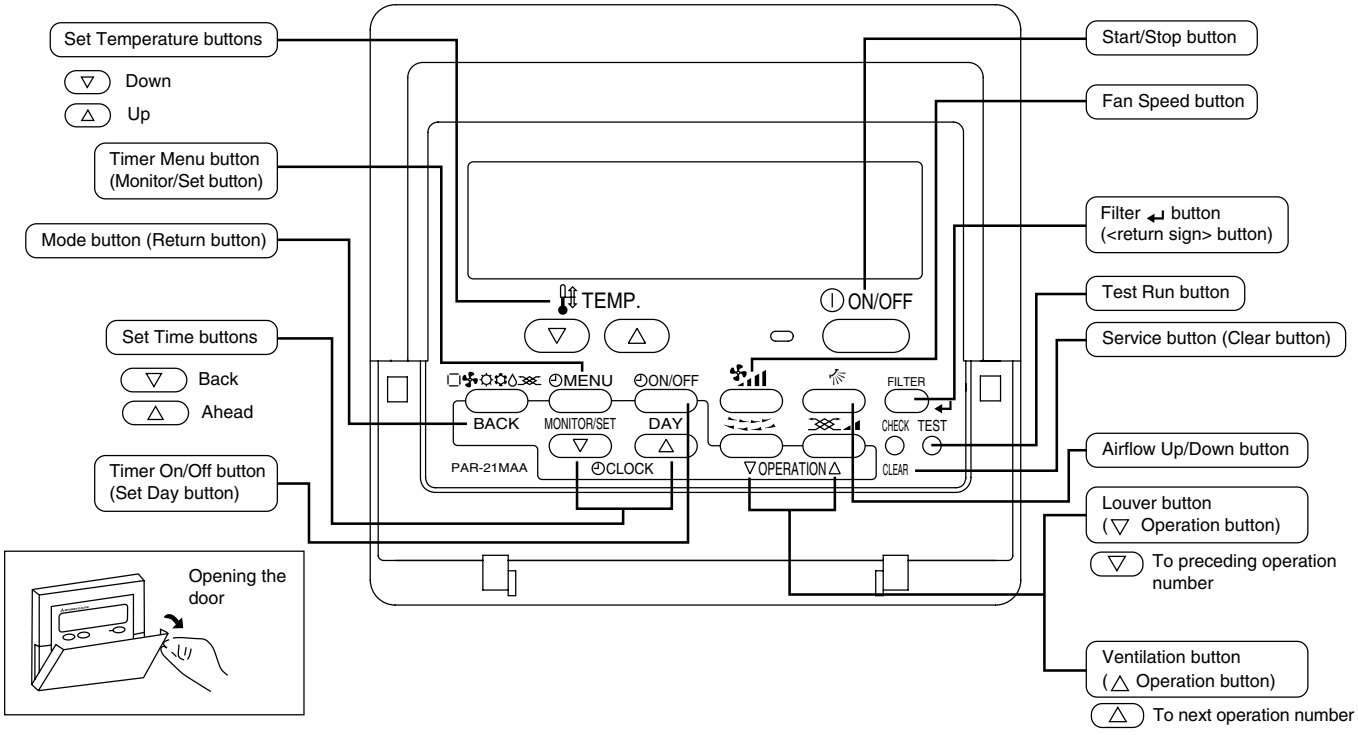

● Display

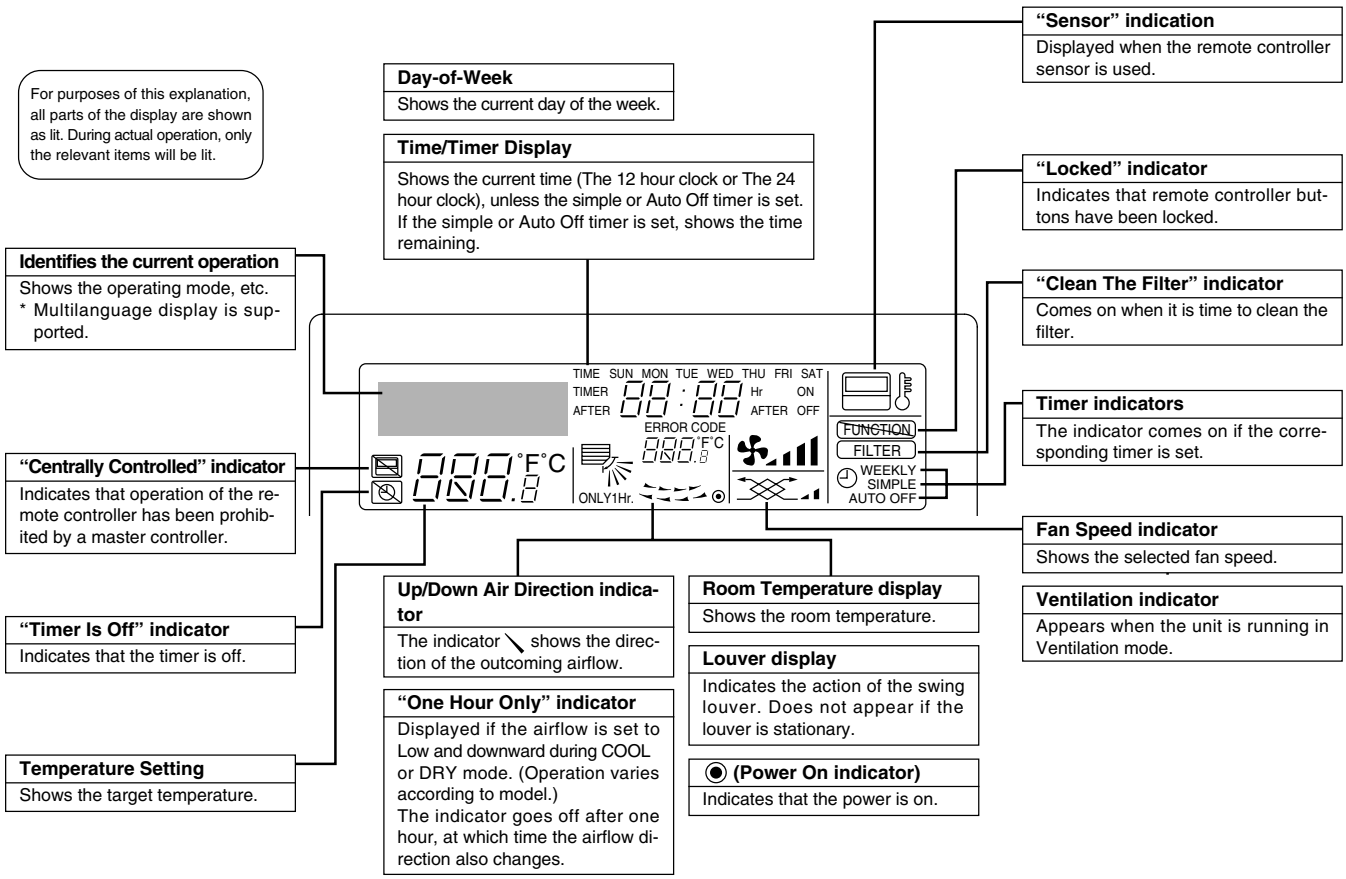

Caution

- Only the Power on indicator lights when the unit is stopped and power supplied to the unit.
- If you press a button for a feature that is not installed in the indoor unit, the remote controller will display the "Not Available" message.
  If you are using the remote controller to operate multiple indoor units, this message will appear only if the feature is not present at the parent unit.
- When power is turned ON for the first time, it is normal that "PLEASE WAIT" is displayed on the room temperature indication (For max. 2minutes). Please wait until this "PLEASE WAIT" indication disappears then start the operation.

2 SPECIFICATIONS

Model Name			PEA-A12AA(4), (6)		PEA-A18AA(4), (6)	
Capacity			Cooling	Heating	Cooling	Heating
		BTU/h	12000	-	18000	19000
Power source			208/230V (60Hz)		208/230V (60Hz)	
Power input		kW	0.07	-	0.09	0.07
Current		A	0.57	-	0.74	0.63
Temperature set range Remote controller		˚F(˚C)	67 to 86 (19 to 30)	-	67 to 86 (19 to 30)	63 to 83 (17 to 28)
Airflow direction			-		-	
Fan	Type x Quantity		Sirocco fan x 2		Sirocco fan x 4	
	External static press	in.WG(Pa)	0.02-0.06-0.14-0.20 (5-15-35-50)		0.02-0.06-0.14-0.20 (5-15-35-50)	
	Motor type		DC brushless motor		DC brushless motor	
	Motor output	kW	0.096		0.096	
	Driving mechanism		Direct-driven		Direct-driven	
	Airflow rate(Low-Mid-High)	m^3/min	7.0-9.0-11.0		12.0-15.0-18.0	
	Airflow rate(Low-Mid-High)	CFM	247-317-388		423-529-635	
	Airflow rate(Low-Mid-High)	L/S	116-150-183		200-250-300	
External finish			Galvanized		Galvanized	
External dimension H x W x D		mm	200 x 990 x 700		200 x 1190 x 700	
		In.	7-7/8 x 39 x 27-9/16		7-7/8 x 46-7/8 x 27-9/16	
Net weight		kg	22		28	
Wiring	Min.size of wire	in.(mm)	1/8 (1.6)		1/8 (1.6)	
	Amperage of wire breaker	A	15		15	
Refrigerant piping diameter	Liquid R410A	in.(mm)	ø1/4 (ø6.35) Flare		ø1/4 (ø6.35) Flare	
	Gas R410A	in.(mm)	ø1/2 (ø12.7) Flare		ø1/2 (ø12.7) Flare	
Drain piping diameter		in.(mm)	O.D. 1-1/4 (32)		O.D. 1-1/4 (32)	
Sound level (Low-Mid-High) (measured in anechoic room)		dB<A>	23-28-33		30-34-38	
Insulation material			Polystyrene foam, Polyethylene foam, Urethane foam		Polystyrene foam, Polyethylene foam, Urethane foam	
Air filter			PP Honeycomb fabric (washable)		PP Honeycomb fabric (washable)	
Refrigerant control device			-		-	
Protection devices			Fuse (250V 6.3A)		Fuse (250V 6.3A)	
Heat exchanger			Cross fin (Aluminum fin and copper tube)		Cross fin (Aluminum fin and copper tube)	
Varistor			ERZV10D471		ERZV10D471	
Terminal block			To outdoor unit : 3P To wired remote controller : 2P		To outdoor unit : 3P To wired remote controller : 2P	
Power outlet		A	10		20	
Standard attachment	Document		Installation Manual, Instruction Book		Installation Manual, Instruction Book	
	Accessory		Drain hose (flexible joint), <Wired Remote Controller>		Drain hose (flexible joint), <Wired Remote Controller>	
Remark						

Note

1.Cooling/Heating capacity indicates the maximum value at operation under the following condition.
<Cooling> Indoor: 80˚FD.B. / 67˚FW.B. (26.7˚CD.B. / 19.4˚CW.B.) Outdoor:95˚FD.B. (35˚CD.B.)
<Heating> Indoor:70˚FD.B. (21.1˚CD.B.) Outdoor:47˚FD.B. / 43˚FW.B. (8.3˚CD.B. / 6.1˚CW.B.)
Pipe length: 24-9/16ft (7.5m) Height difference: 0ft (0m)
2.Power consumption. Run current at 0.060[in.WG] (15Pa) (external static pressure)
3.Cooling capacity value at 1:1system
Heating capacity value at 1:1system
4. < > PEA-A・AA only

SOUND CRITERION CURVES

PEA-A12AA(4), (6)

External static pressure :
0.020[in.WG](5Pa)

<60Hz>

NOTCH	SPL(dB)	LINE
High	33	
Middle	28	
Low	23	

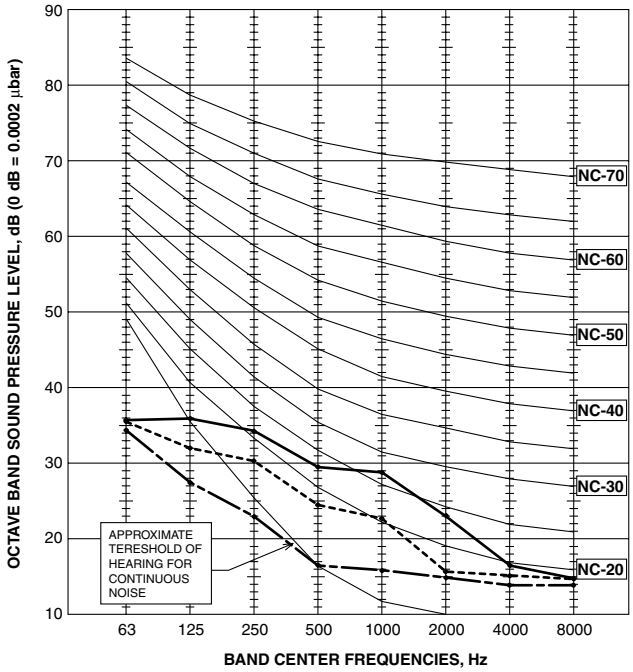

PEA-A12AA(4), (6)

External static pressure :
0.060[in.WG](15Pa)

<60Hz>

NOTCH	SPL(dB)	LINE
High	33	
Middle	28	
Low	23	

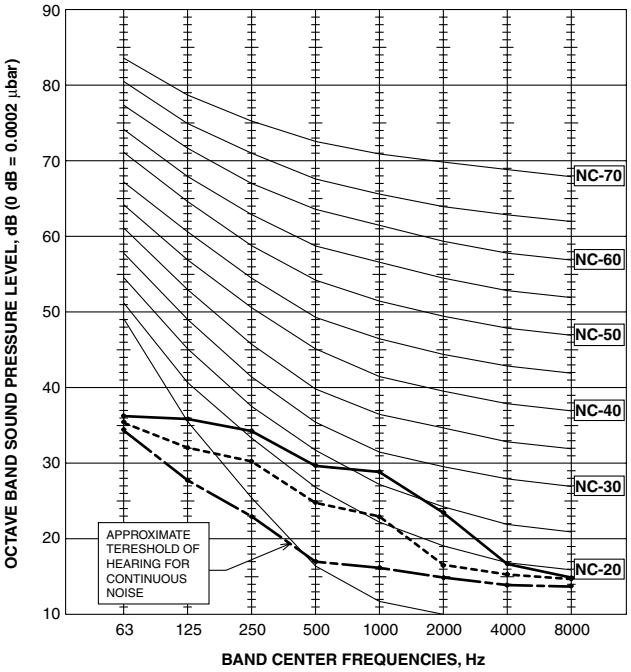

PEA-A12AA(4), (6)

External static pressure :
0.140[in.WG](35Pa)

<60Hz>

NOTCH	SPL(dB)	LINE
High	34	
Middle	29	
Low	24	

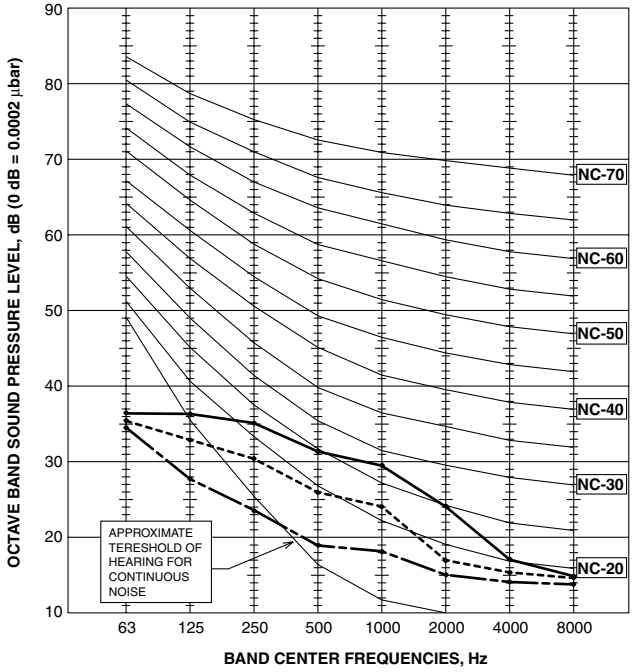

PEA-A12AA(4), (6)

External static pressure :
0.200[in.WG](50Pa)

<60Hz>

NOTCH	SPL(dB)	LINE
High	35	
Middle	31	
Low	25	

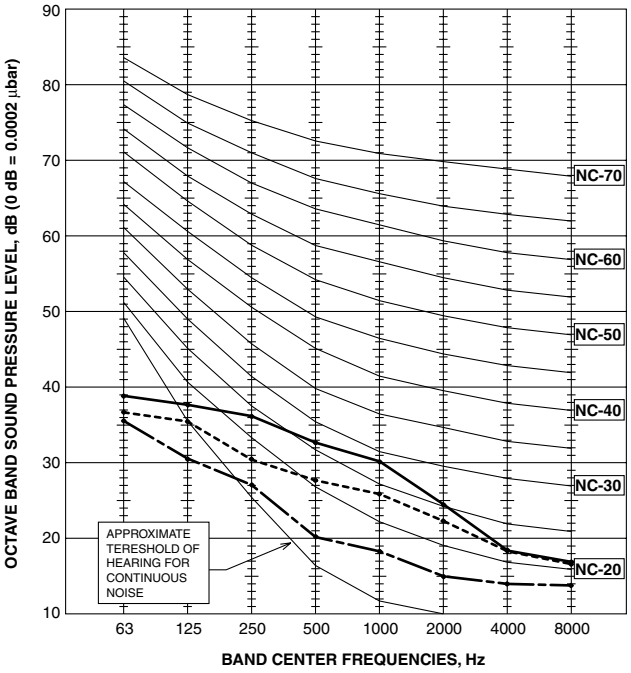

NOTE: The sound level is measured in an anechoic room where echoes are few, when compressor stops. The sound may be bigger than displayed level under actual installation condition by surrounding echoes. The sound level can be higher by about 2 dB than the displayed level during cooling and heating operation.

PEA-A18AA(4), (6)

External static pressure :
0.020[in.WG](5Pa)

<60Hz>

NOTCH	SPL(dB)	LINE
High	37	
Middle	33	
Low	29	

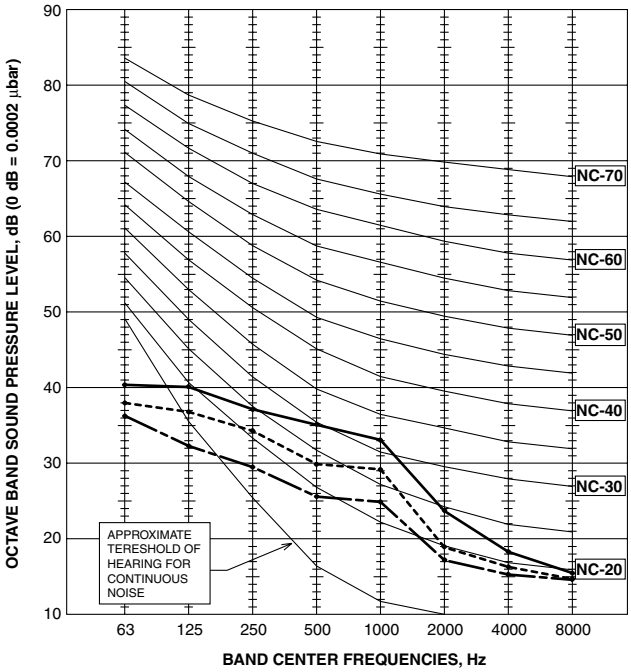

PEA-A18AA(4), (6)

External static pressure :
0.060[in.WG](15Pa)

<60Hz>

NOTCH	SPL(dB)	LINE
High	38	
Middle	34	
Low	30	

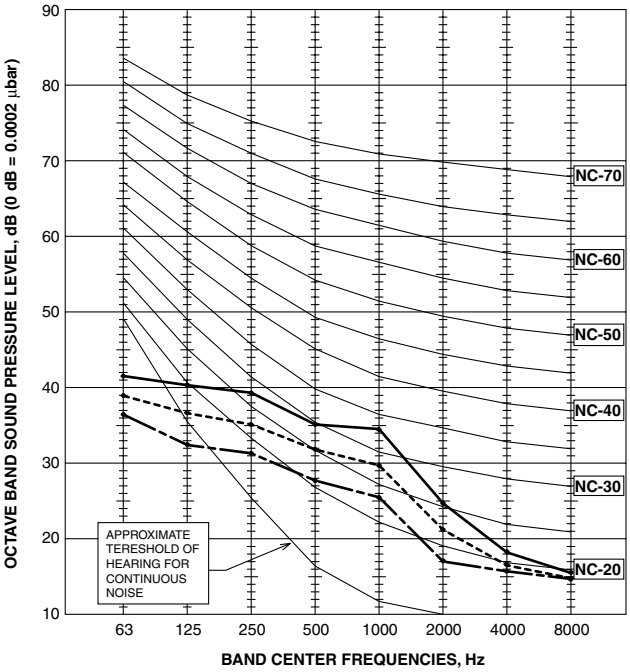

PEA-A18AA(4), (6)

External static pressure :
0.140[in.WG](35Pa)

<60Hz>

NOTCH	SPL(dB)	LINE
High	39	
Middle	35	
Low	31	

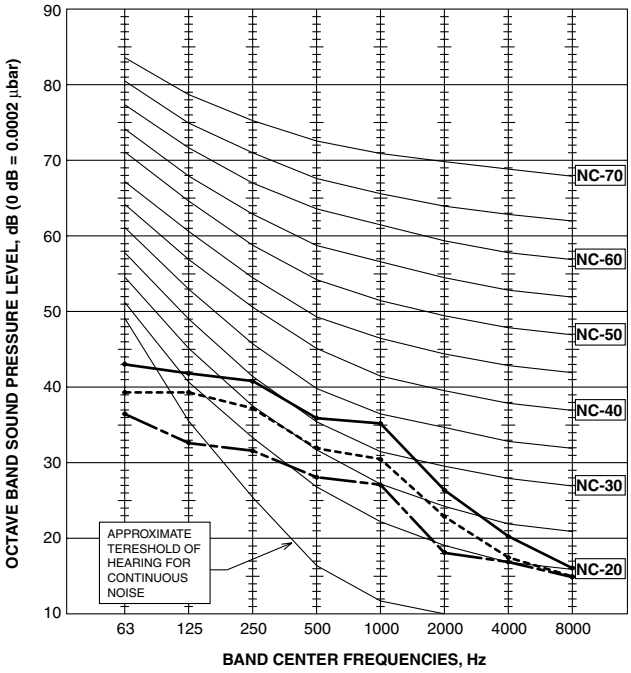

PEA-A18AA(4), (6)

External static pressure :
0.200[in.WG](50Pa)

<60Hz>

NOTCH	SPL(dB)	LINE
High	39	
Middle	36	
Low	32	

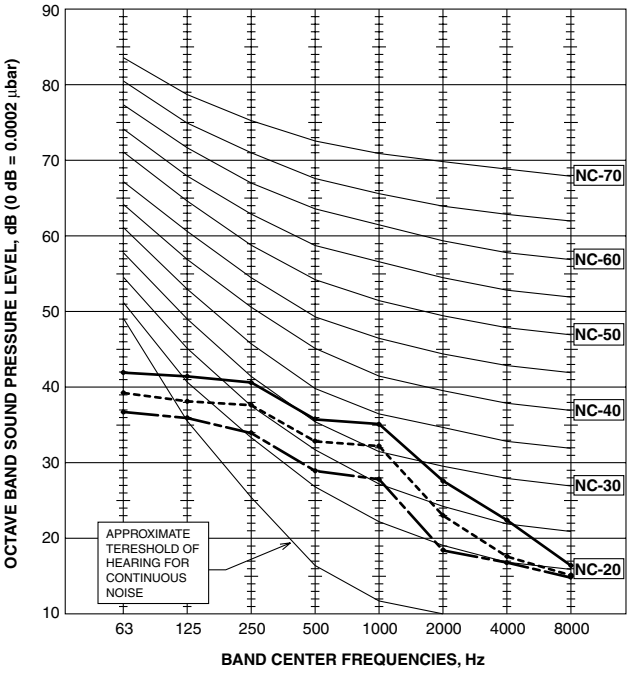

NOTE: The sound level is measured in an anechoic room where echoes are few, when compressor stops. The sound may be bigger than displayed level under actual installation condition by surrounding echoes. The sound level can be higher by about 2 dB than the displayed level during cooling and heating operation.

INDOOR FAN PERFORMANCE AND CORRECTED AIR FLOW

PEA-A12AA(4), (6)

(External static pressure 0.020[in.WG](5Pa) 208/230V 60Hz

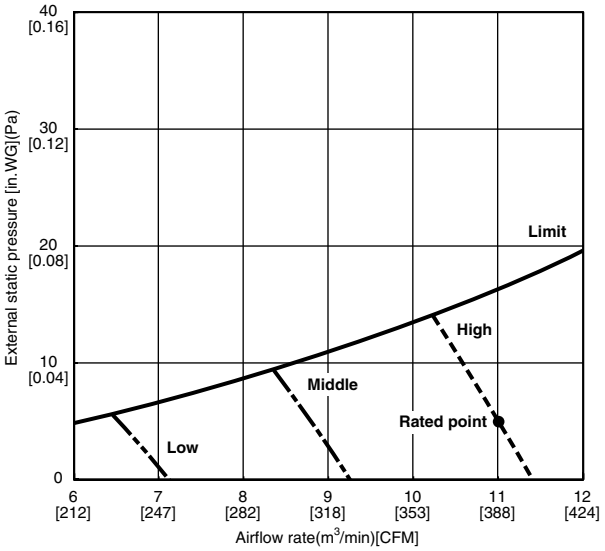

PEA-A12AA(4), (6)

(External static pressure 0.060[in.WG](15Pa) 208/230V 60Hz

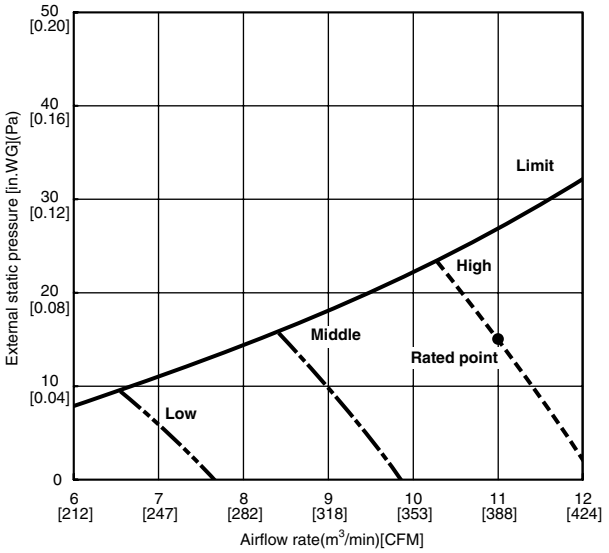

PEA-A12AA(4), (6)

(External static pressure 0.140[in.WG](35Pa) 208/230V 60Hz

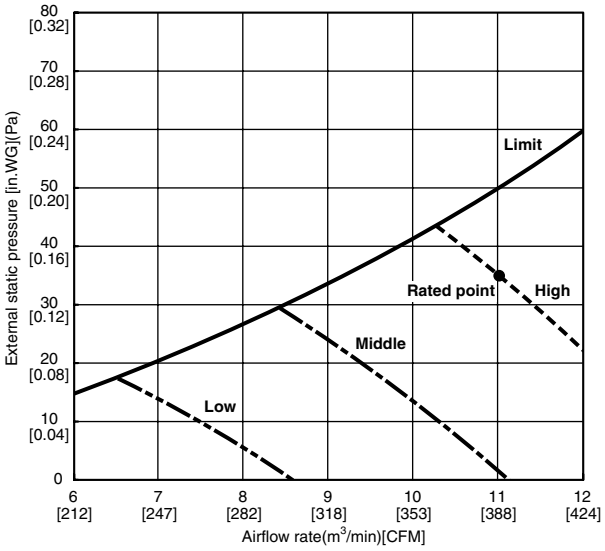

PEA-A12AA(4), (6)

(External static pressure 0.200[in.WG](50Pa) 208/230V 60Hz

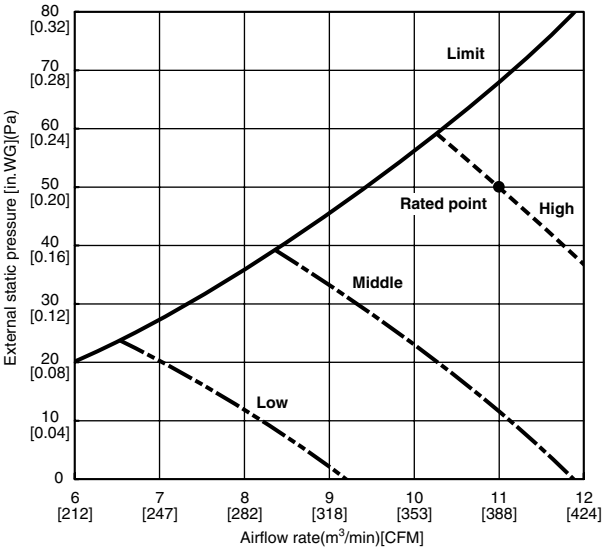

PEA-A18AA(4), (6)

(External static pressure 0.020[in.WG](5Pa) 208/230V 60Hz

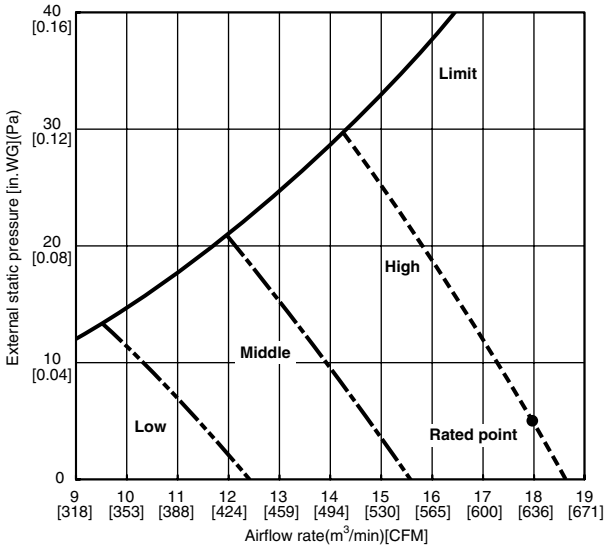

PEA-A18AA(4), (6)

(External static pressure 0.060[in.WG](15Pa) 208/230V 60Hz

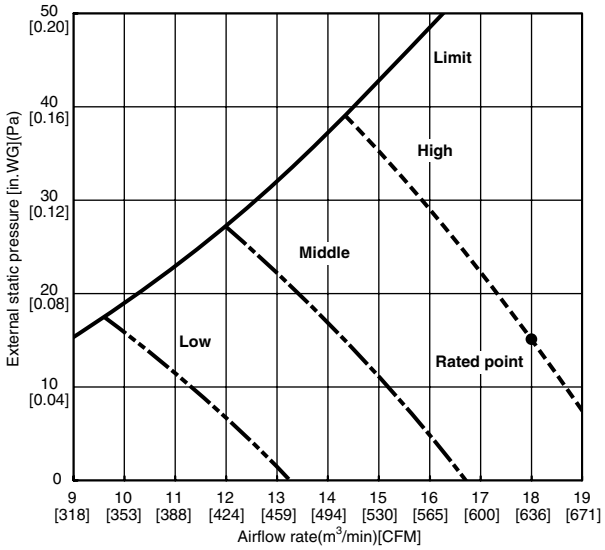

PEA-A18AA(4), (6)

(External static pressure 0.140[in.WG](35Pa) 208/230V 60Hz

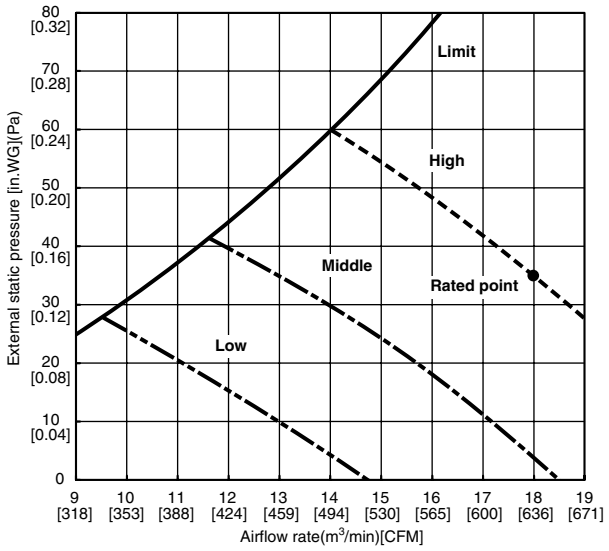

PEA-A18AA(4), (6)

(External static pressure 0.200[in.WG](50Pa) 208/230V 60Hz

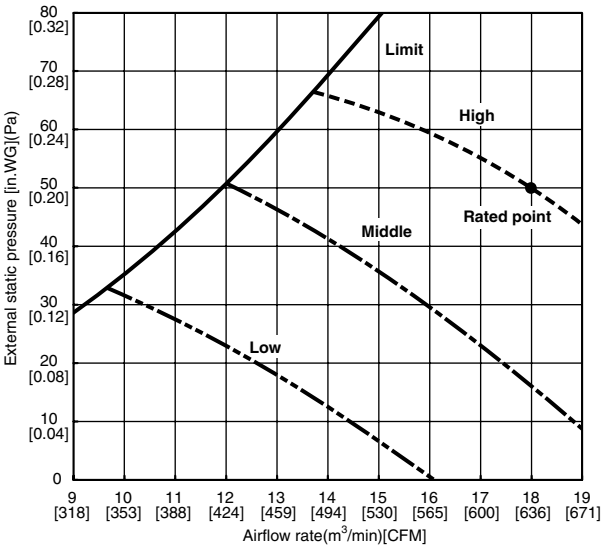

3 OUTLINES AND DIMENSIONS

PEA-A12AA(4), (6)
PEA-A18AA(4), (6)

Unit : mm(in.)

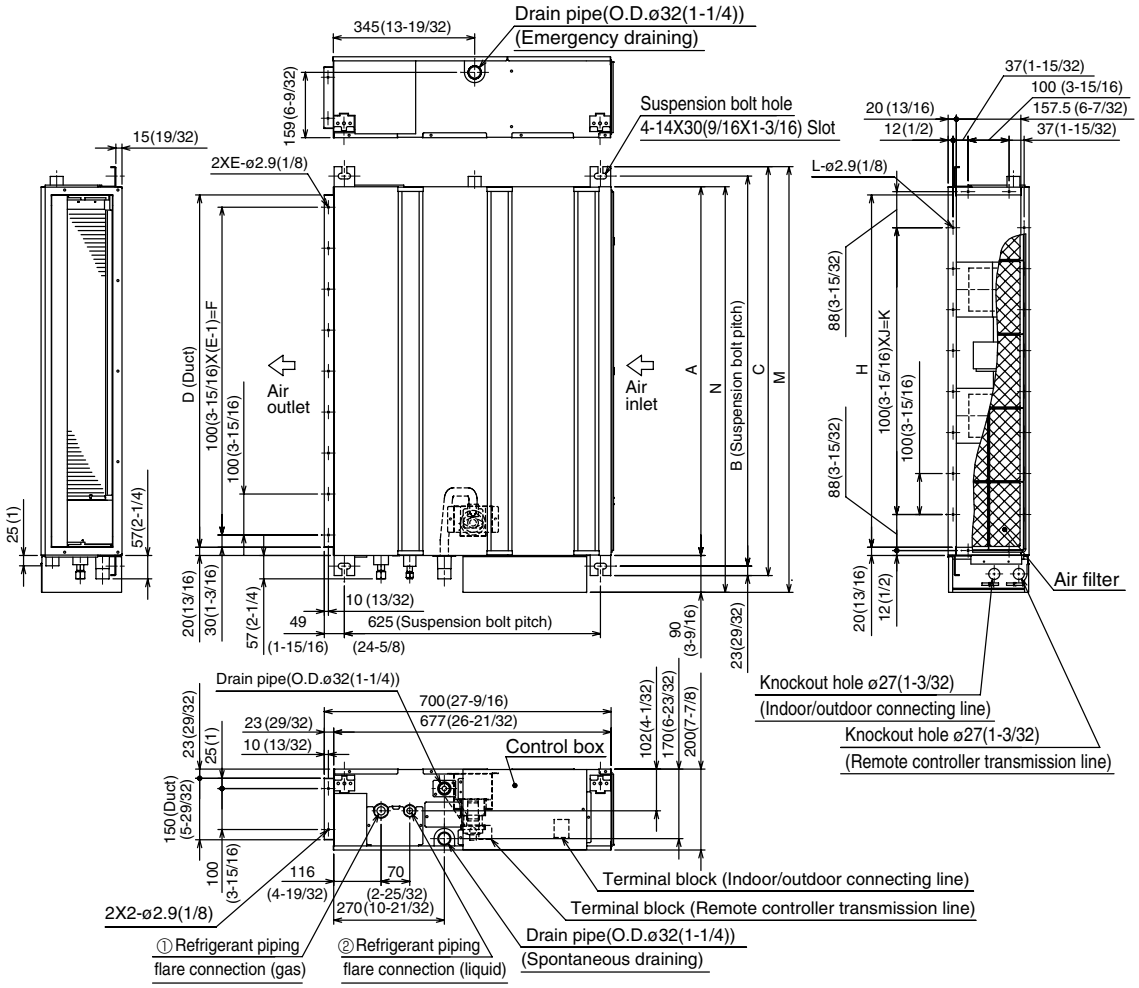

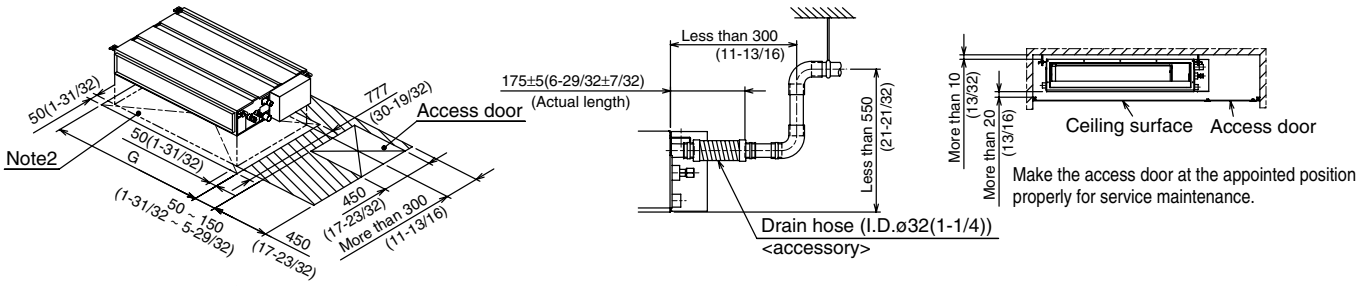

Required space for service and maintenance

mm(in.)

Model	A	B	C	D	E	F	G	H	J	K	L	M	N	① Gas pipe	② Liquid pipe
PEA-A12AA(4), (6)	900 (35-7/16)	952 (37-1/2)	998 (39-5/16)	860 (33-7/8)	9	800 (31-1/2)	1000 (39-3/8)	860 (33-7/8)	7	700 (27-9/16)	20	1039 (40-29/32)	990 (39)	ø12.7(1/2)	ø6.35(1/4)
PEA-A18AA(4), (6)	1100 (43-5/16)	1152 (45-3/8)	1198 (47-3/16)	1060 (41-3/4)	11	1000 (39-3/8)	1200 (47-1/4)	1060 (41-3/4)	9	900 (35-7/16)	24	1239 (48-25/32)	1190 (46-7/8)		

Note1.Use M10 screw for the suspension bolt (field supply).
2.Keep the service space for the maintenance at the bottom.
3.This chart indicates for PEA-A12AA(4), (6) model, which has 2 fans.
PEA-A18AA(4), (6) models have 4 fans.
4.In case an inlet duct is used, remove the air filter (supply with the unit), then install the filter (field supply) at suction side.

4 WIRING DIAGRAM

PEA-A12AA
PEA-A18AA

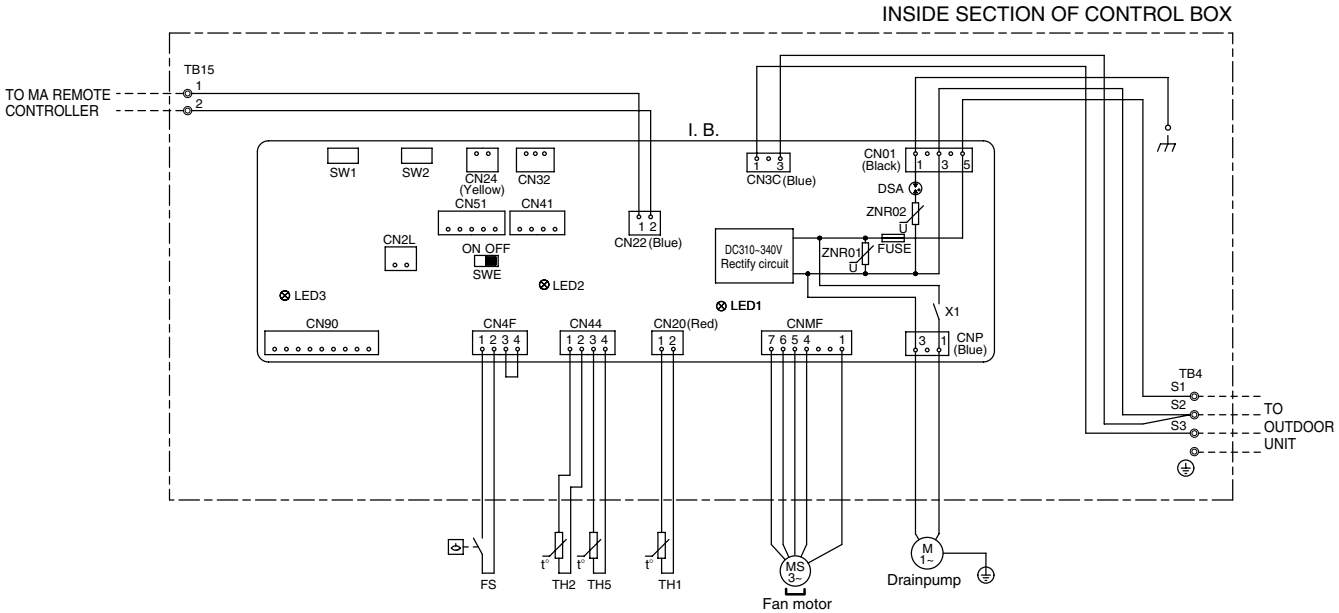

SYMBOL EXPLANATION

SYMBOL	NAME	SYMBOL	NAME
I. B.	INDOOR CONTROLLER BOARD	LED2	POWER SUPPLY (I.B.)
FUSE	FUSE AC250V 6.3A	LED3	TRANSMISSION (INDOOR-OUTDOOR)
ZNR01,02	VARISTOR	SW1	SWITCH (FOR MODEL SELECTION)
DSA	ARRESTER	SW2	SWITCH (FOR CAPACITY CODE)
X1	AUX. RELAY	SWE	CONNECTOR (EMERGENCY OPERATION)
CN2L	CONNECTOR (LOSSNAY)	TH1	INTAKE AIR TEMP. THERMISTOR
CN24	CONNECTOR (BACK-UP HEATING)	TH2	PIPE TEMP. THERMISTOR/LIQUID
CN32	CONNECTOR (REMOTE SWITCH)	TH5	COND./EVA. TEMP. THERMISTOR
CN41	CONNECTOR (HA TERMINAL-A)	FS	FLOAT SWITCH
CN51	CONNECTOR (CENTRALLY CONTROL)	TB4	TERMINAL BLOCK (INDOOR/OUTDOOR CONNECTING LINE)
CN90	CONNECTOR (WIRELESS)		
LED1	POWER SUPPLY (I.B.)	TB15	TERMINAL BLOCK (REMOTE CONTROLLER TRANSMISSION LINE)

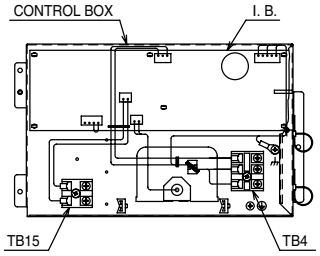

PARTS LOCATION

Note1.Since the outdoor side electric wiring may change be sure to check the outdoor unit electric wiring for servicing.
2.Indoor and outdoor connecting wires are made with polarities, make wiring matching terminal numbers(S1,S2,S3).
3.Symbols used in wiring diagram above are,⊖:Connector,◎:Terminal.
4.Use copper supply wire.

PEA-A12AA4, PEA-A12AA6
PEA-A18AA4, PEA-A18AA6

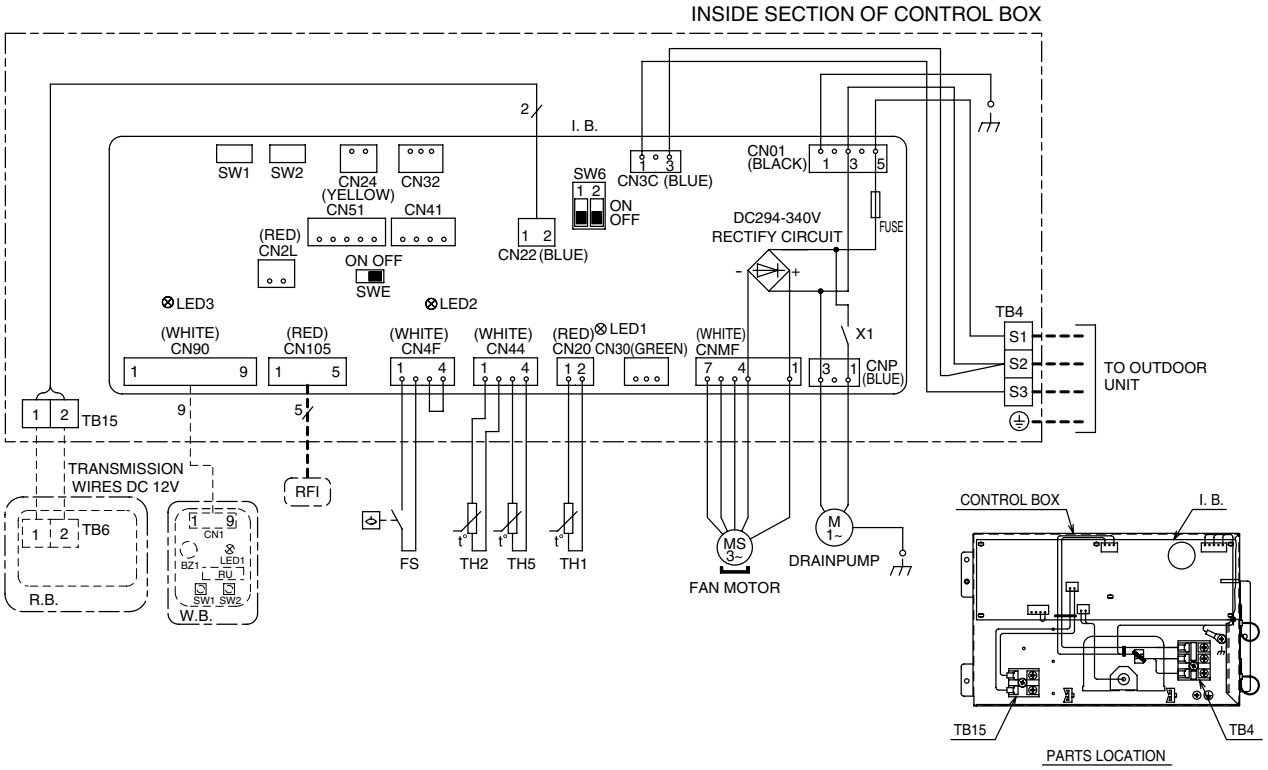

SYMBOL EXPLANATION

SYMBOL	NAME
I.B.	INDOOR CONTROLLER BOARD
FUSE	FUSE AC250V 6.3A
X1	AUX. RELAY
CN2L	CONNECTOR (LOSSNAY)
CN24	CONNECTOR (BACK-UP HEATING)
CN30	CONNECTOR (LLC)
CN32	CONNECTOR (REMOTE SWITCH)
CN41	CONNECTOR (HA TERMINAL-A)
CN51	CONNECTOR (CENTRALLY CONTROL)
CN90	CONNECTOR (WIRELESS)
CN105	CONNECTOR (RADIO FREQUENCY INTERFACE)
LED1	POWER SUPPLY (I.B.)
LED2	POWER SUPPLY (I.B.)
LED3	TRANSMISSION (INDOOR-OUTDOOR)

SYMBOL	NAME
I.B.	INDOOR CONTROLLER BOARD
SW1	SWITCH (FOR MODEL SELECTION)
SW2	SWITCH (FOR CAPACITY CODE)
SW6	SWITCH (FOR EMERGENCY OPERATION)
SWE	CONNECTOR (EMERGENCY OPERATION)
TH1	INTAKE AIR TEMP. THERMISTOR
TH2	PIPE TEMP. THERMISTOR/LIQUID
TH5	COND./EVA. TEMP. THERMISTOR
FS	FLOAT SWITCH
TB4	TERMINAL BLOCK (INDOOR/OUTDOOR CONNECTING LINE)
TB15	TERMINAL BLOCK (REMOTE CONTROLLER TRANSMISSION LINE)
RFI	RADIO FREQUENCY INTERFACE FOR RF THERMOSTAT

SYMBOL	NAME
OPTIONAL PARTS	
W.B.	IR WIRELESS REMOTE CONTROLLER BOARD
RU	RECEIVING UNIT
BZ1	BUZZER
LED1	LED (RUN INDICATOR)
SW1	SWITCH (HEATING ON/OFF)
SW2	SWITCH (COOLING ON/OFF)
R.B.	REMOTE CONTROLLER BOARD
TB6	TERMINAL BLOCK (REMOTE CONTROLLER TRANSMISSION LINE)

Note1. Since the outdoor side electric wiring may change be sure to check the outdoor unit electric wiring for servicing.
2. Indoor and outdoor connecting wires are made with polarities,make wiring matchingterminal numbers (S1,S2,S3).
3. Symbols used in wiring diagram above are as follows.
:CONNECTOR
:TERMINAL
(HEAVY DOTTED LINE):FIELD WIRING
(THIN DOTTED LINE):OPTIONAL PARTS
4. Use copper supply wire.

5 REFRIGERANT SYSTEM DIAGRAM

PEA-A12AA(4), (6)
PEA-A18AA(4), (6)

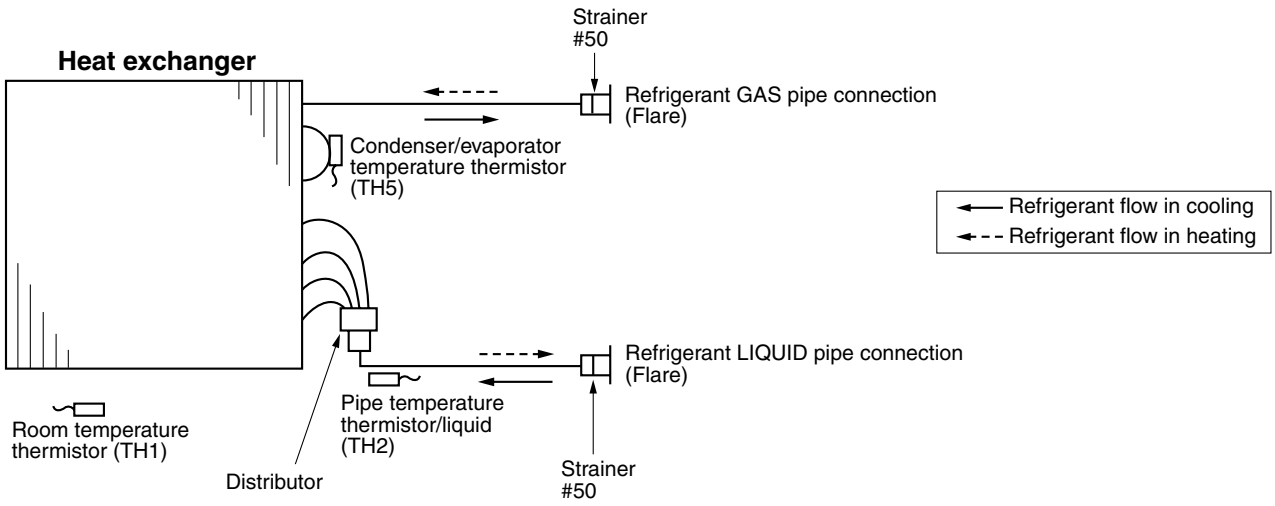

6 HEATER CONTROL

6-1. Control specifications and Function setting

- Table 1 shows how the field-installed heater is controlled. Select the desired pattern in the table below, and set the Function on the indoor units as shown in Table 1.

Table.1 [Function table]
Select unit numbers 01 to 03 or all units (AL[wired remote controller] / 07[wireless remote controller])

Mode	Setting	Mode no.	Setting	Initial setting
Heater control	Heater OFF Inlet air temp. ≥ set temp. Heater ON Inlet air temp. < set temp.-4.5˚F(2.5˚C) ・The fan will stop and the heater will turn off when [DEFROST] or [ERROR] is displayed. 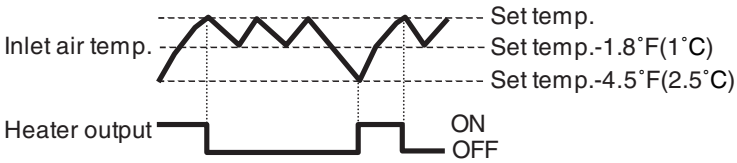 	23	1	○
	Heater OFF Inlet air temp. ≥ set temp. Heater ON Inlet air temp. < set temp.-4.5˚F(2.5˚C) ・The fan will drive and the heater will turn on when [DEFROST] or [ERROR] is displayed. 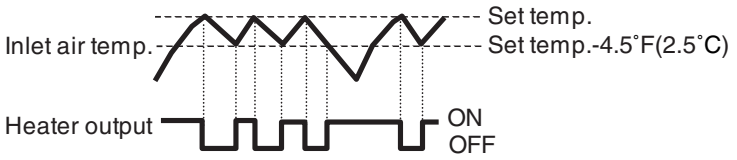 	23	2	-

*Refer to the Installation Manual for function settings.

6-2. Fan control

By setting the Mode No. 23 in the Function Table in section 6-1 and using CN4Y on the optional parts PAC-YU25HT, the following patterns of fan control will become possible when [DEFROST] or [ERROR] is displayed.

Fan control patterns when [DEFROST] or [ERROR] is displayed

	Heater is installed in the duct.	No heater is installed in the duct.
Use of CN4Y (PAC-YU25HT)	Unused*	Used
Heater is off.	Fan ON*1	Fan OFF
Heater is on.	Fan ON*1	Fan OFF

⚠

*** If a heater is installed in the duct, do not use CN4Y. By doing so, the fan will turn off when the heater is on, which may result in fire.**

*1 Fan speed setting

Mode	Setting		Mode no.	Setting	Initial setting
	Heating Thermo-OFF	[DEFROST] or [ERROR]			
Fan control	Very low	Very low	25	1	○
	STOP	Remote controller setting	25	2	-
	Remote controller setting	Remote controller setting	25	3	-

*Refer to the Installation Manual for function settings.

6-3. PAC-YU25HT (Optional Parts) installation

The following section describes installation of the External Heater Adapter that connects to PEA-A·AA series indoor unit. This products is the special wiring parts to drive an electric heater with the air conditioner.

(1) Parts list

•Check that the following parts are included in the package.

1) External output cable (with a yellow connector).....2 in total
Two types of cables with different connectors are included.

2) Panel heater connector..... 3 in total
White: 1
Green: 2 (2 types)

(2) Connection to the indoor unit

•Use the cables that fit the connectors on the indoor unit control board.

1) External output cable (with a yellow connector)
This cable is used to connect a relay circuit for an interlocked operation with either an electric or a panel heater. Connect the cable to CN24 on the indoor unit control board.

2) Panel heater connector (with a white connector)
This connector is used to perform an interlocked operation with a panel heater. Depending on the indoor unit control board specification, connect the cable to CN4Y as appropriate

<Image>

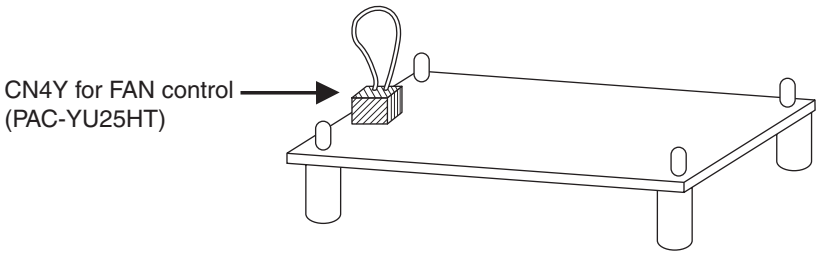

(3) Locally procured wiring

•A basic connection method is shown below.

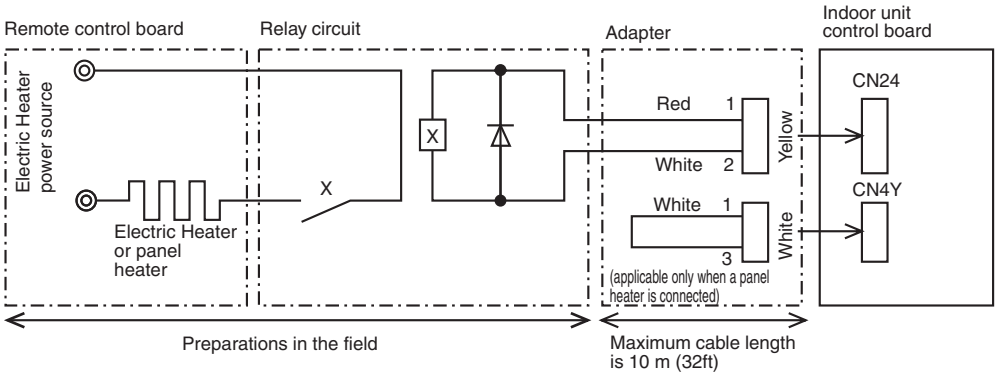

♦For relay X, use the specifications given below.
Rated voltage: 12VDC
Power consumption: 0.9W or less
* Use the diode that is recommended by the relay manufacturer at both ends of the relay coil.
♦The length of the electrical wiring for the PAC-YU25HT is 2 meters (6-1/2 ft.)
♦To extend this length, use sheathed 2-core cable.
Control cable type: CVV, CVS, CPEV or equivalent.
Cable size: 0.5 mm^2 ~ 1.25 mm^2 (16 to 22 AWG)
Don't extend the cable more than 10 meters (32ft)

Recommended circuit

Wiring diagram

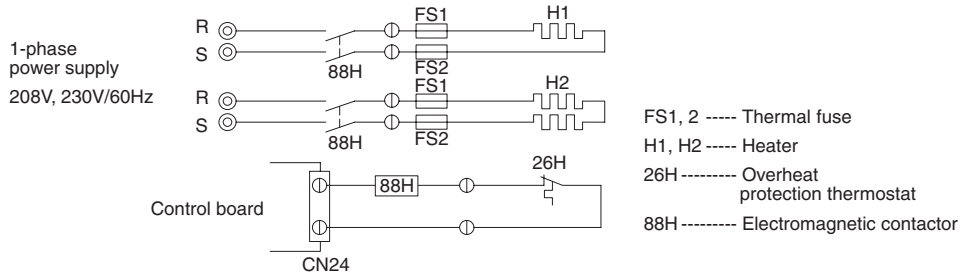

(4) Wiring restrictions

♦Keep the length of the cable connecting to the circuit board of the indoor unit shorter than 10 meters (32ft).
♦Longer than 10 meters (32ft) could cause improper operation.
♦Use a transit relay when extending wiring such as remote wiring.

7 TROUBLESHOOTING

7-1. CAUTIONS ON TROUBLESHOOTING

(1) Before troubleshooting, check the followings:

① Check the power supply voltage.

② Check the indoor/outdoor connecting wire for mis-wiring.

(2) Take care the followings during servicing.

① Before servicing the air conditioner, be sure to turn off the remote controller first to stop the main unit, and then turn off the breaker.

② When removing the indoor controller board, hold the edge of the board with care NOT to apply stress on the components.

③ When connecting or disconnecting the connectors, hold the housing of the connector. DO NOT pull the lead wires.

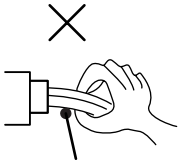

Lead wires

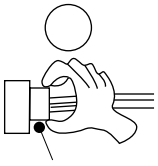

Housing point

7-2. SELF-CHECK FUNCTION

Wired remote controller

(1) Turn on the power.

(2) Press the [CHECK] button twice.

(3) Set refrigerant address with [TEMP] button if system control is used.

(4) Press the [ON/OFF] button to stop the self-check.

Ⓐ CHECK button

Ⓑ Indoor Unit's Refrigerant address

Ⓒ TEMP button

Ⓓ IC : Indoor unit
OC : Outdoor unit

Ⓔ Check code

Ⓕ Indoor Unit No.

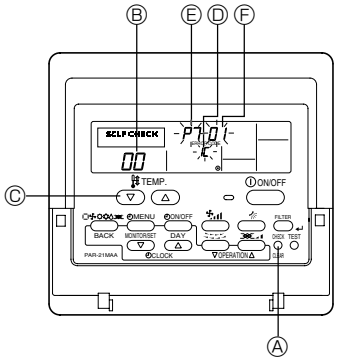

• For description of each check code, refer to the following table.

① Check code	Symptom	Remark
P1	Intake sensor error	
P2	Pipe (TH2) sensor error	
P9	Pipe (TH5) sensor error	
E6,E7	Indoor/outdoor unit communication error	
P4	Drain sensor error	
P5	Drain pump error	
P6	Freezing/Overheating protection operation	
EE	Communication error between indoor and outdoor units	
P8	Pipe temperature error	
E0, E3~E5	Remote controller transmission error	
E1, E2	Remote controller control board error	
Fb	Indoor unit control system error (memory error, etc.)	
E9	Indoor/outdoor unit communication error (Transmitting error) (Outdoor unit)	For details, check the LED display of the outdoor controller board. As for outdoor unit, refer to service manual OC322.
UP	Compressor overcurrent interruption	
U3,U4	Open/short of outdoor unit thermistors	
UF	Compressor overcurrent interruption (When compressor locked)	
U2	Abnormal high discharging temperature/49C worked/insufficient refrigerant	
U1,Ud	Abnormal high pressure (63H worked)/Overheating protection operation	
U5	Abnormal temperature of heat sink	
U8	Outdoor unit fan safeguard stop	
U6	Compressor overcurrent interruption/Abnormal of power module	
U7	Abnormality of super heat due to low discharge temperature	
U9,UH	Abnormality such as overvoltage or voltage shortage and abnormal synchronous signal to main circuit /Current sensor error	
Others	Other errors (Refer to the technical manual for the outdoor unit.)	

• On wired remote controller.

① Check code displayed in the LCD.

• If the unit cannot be operated properly after the test run has been performed, refer to the following table to remove the cause.

Symptom			Cause
Wired remote controller		LED 1, 2 (PCB in outdoor unit)	
PLEASE WAIT	For about 2 minutes after power-on	After LED 1, 2 are lighted, LED 2 is turned off, then only LED 1 is lighted. (Correct operation)	•For about 2 minutes after power-on,operation of the remote controller is not possible due to system start-up. (Correct operation)
PLEASE WAIT → Error code	After about 2 minutes has expired after power-on	Only LED 1 is lighted. → LED 1, 2 blink.	•Connector for the outdoor unit's protection device is not connected. •Reverse or open phase wiring for the outdoor unit's power terminal block (L1, L2, L3)
Display messages do not appear even when operation switch is turned ON (operation lamp does not light up).		Only LED 1 is lighted. → LED 1 blinks twice, LED 2 blinks once.	•Incorrect wiring between indoor and outdoor units (incorrect polarity of S1, S2, S3) •Remote controller wire short

On the wireless remote controller with condition above, following phenomena take place.
• No signals from the remote controller are accepted.
• Operation lamp is blinking.
• The buzzer makes a short piping sound.

Note:
Operation is not possible for about 30 seconds after cancellation of function selection. (Correct operation)

For description of each LED (LED1, 2, 3) provided on the indoor controller, refer to the following table.

LED1 (power for microcomputer)	Indicates whether control power is supplied. Make sure that this LED is always lit.
LED2 (power for remote controller)	Indicates whether power is supplied to the remote controller. This LED lights only in the case of the indoor unit which is connected to the outdoor unit refrigerant address "0".
LED3 (communication between indoor and outdoor units)	Indicates state of communication between the indoor and outdoor units. Make sure that this LED is always blinking.

- **Refer to the installation manual that comes with each remote controller for details.**
- **RF thermostat is not established.**

[Output pattern A] Errors detected by indoor unit

IR wireless remote controller Beeper sounds/OPERATION INDICATOR lamp flashes (Number of times)	Wired remote controller RF thermostat Check code	Symptom	Remark
1	P1	Intake sensor error	
2	P2, P9	Pipe (Liquid or 2-phase pipe) sensor error	
3	E6, E7	Indoor/outdoor unit communication error	
4	P4	Drain sensor error	
5	P5	Drain pump error	
6	P6	Freezing/Overheating safeguard operation	
7	EE	Communication error between indoor and outdoor units	
8	P8	Pipe temperature error	
9	E4	Remote controller signal receiving error	
10	–	–	
11	–	–	
12	Fb	Indoor unit control system error (memory error, etc.)	
No sound	– –	No corresponding	

[Output pattern B] Errors detected by unit other than indoor unit (outdoor unit, etc.)

IR wireless remote controller Beeper sounds/OPERATION INDICATOR lamp flashes (Number of times)	Wired remote controller RF thermostat Check code	Symptom	Remark
1	E9	Indoor/outdoor unit communication error (Transmitting error) (Outdoor unit)	For details, check the LED display of the outdoor controller board.
2	UP	Compressor overcurrent interruption	
3	U3, U4	Open/short of outdoor unit thermistors	
4	UF	Compressor overcurrent interruption (When compressor locked)	
5	U2	Abnormal high discharging temperature/49C worked/ insufficient refrigerant	
6	U1, Ud	Abnormal high pressure (63H worked)/ Overheating safeguard operation	
7	U5	Abnormal temperature of heat sink	
8	U8	Outdoor unit fan protection stop	
9	U6	Compressor overcurrent interruption/Abnormal of power module	
10	U7	Abnormality of super heat due to low discharge temperature	
11	U9, UH	Abnormality such as overvoltage or voltage shortage and abnormal synchronous signal to main circuit/Current sensor error	
12	–	–	
13	–	–	
14	Others	Other errors (Refer to the technical manual for the outdoor unit.)	

***1 If the beeper does not sound again after the initial two beeps to confirm the self-check start signal was received and the OPERATION INDICATOR lamp does not come on, there are no error records.**

***2 If the beeper sounds three times continuously "beep, beep, beep (0.4 + 0.4 + 0.4 sec.)" after the initial two beeps to confirm the self-check start signal was received, the specified refrigerant address is incorrect.**

- On IR wireless remote controller
  The continuous buzzer sounds from receiving section of indoor unit.
  Blink of operation lamp
- On wired remote controller
  Check code displayed on the LCD.

- If the unit cannot be operated properly after the test run has been performed, refer to the following table to remove the cause.

Symptom			Cause
Wired remote controller		LED 1, 2 (PCB in outdoor unit)	
PLEASE WAIT	For about 2 minutes following power-on	After LED 1, 2 are lighted, LED 2 is turned off, then only LED 1 is lighted. (Correct operation)	• For about 2 minutes after power-on, operation of the remote controller is not possible due to system start-up. (Correct operation)
PLEASE WAIT → Error code	After about 2 minutes has expired following power-on	Only LED 1 is lighted. → LED 1, 2 blink.	• Connector for the outdoor unit's protection device is not connected. • Reverse or open phase wiring for the outdoor unit's power terminal block (L1, L2, L3)
Display messages do not appear even when operation switch is turned ON (operation lamp does not light up).		Only LED 1 is lighted. → LED 1, 2 blinks twice, LED 2 blinks once.	• Incorrect wiring between indoor and outdoor units (incorrect polarity of S1, S2, S3) • Remote controller wire short

On the IR wireless remote controller with conditions above, following phenomena takes place.
- No signals from the remote controller are accepted.
- OPE lamp is blinking.
- The buzzer makes a short ping sound.

Note:
Operation is not possible for about 30 seconds after cancellation of function selection. (Correct operation)

For description of each LED (LED1, 2, 3) provided on the indoor controller, refer to the following table.

LED 1 (power for microcomputer)	Indicates whether control power is supplied. Make sure that this LED is always lit.
LED 2 (power for remote controller)	Indicates whether power is supplied to the remote controller. This LED lights only in the case of the indoor unit which is connected to the outdoor unit refrigerant address “0”.
LED 3 (communication between indoor and outdoor units)	Indicates state of communication between the indoor and outdoor units. Make sure that this LED is always blinking.

AUTO RESTART FUNCTION

Indoor controller board

This model is equipped with the AUTO RESTART FUNCTION.
When the indoor unit is controlled with the remote controller, the operation mode, set temperature, and the fan speed are memorized by the indoor controller board.
The auto restart function sets to work the moment the power has restored after power failure, then, the unit will restart automatically.
Set the AUTO RESTART FUNCTION using the wireless remote controller. (Mode no.1).

7-3. SELF-DIAGNOSIS ACTION TABLE

Note: Refer to the manual of outdoor unit for the details of display such as F, U, and other E.

Error Code	Abnormal point and detection method	Cause	Countermeasure
P1	**Room temperature thermistor (TH1)** ① The unit is in three-minute resume prevention mode if short/open of thermistor is detected. Abnormal if the unit does not reset normally after three minutes. (The unit returns to normal operation, if it has normally reset.) ② Constantly detected during cooling, drying and heating operation Short: 90˚C[194˚F] or more Open: -40˚C[-40˚F] or less	① Defective thermistor characteristics ② Contact failure of connector (CN20) on the indoor controller board (Insert failure) ③ Breaking of wire or contact failure of thermistor wiring ④ Defective indoor controller board	①–③ Check resistance value of thermistor. 0℃[32˚F].....15.0kΩ 10℃[50˚F].....9.6kΩ 20℃[68˚F].....6.3kΩ 30℃[86˚F].....4.3kΩ 40℃[104˚F]...3.0kΩ If you put force on (draw or bend) the lead wire with measuring resistance value of thermistor breaking of wire or contact failure can be detected. ② Check contact failure of connector (CN20) on the indoor controller board. Refer to 7-5. Turn the power on again and check restart after inserting connector again. ④ Check room temperature display on remote controller. Replace indoor controller board if there is abnormal difference with actual room temperature. Turn the power off, and on again to operate after check.
P2	**Pipe temperature thermistor/Liquid (TH2)** ① The unit is in three-minute resume prevention mode if short/open of thermistor is detected. Abnormal if the unit does not reset normally after three minutes. (The unit returns to normal operation, if it has normally reset.) ② Constantly detected during cooling, drying, and heating (except defrosting) operation. Short: 90˚C[194˚F] or more Open: -40˚C[-40˚F] or less	① Defective thermistor characteristics ② Contact failure of connector (CN44) on the indoor controller board (Insert failure) ③ Breaking of wire or contact failure of thermistor wiring ④ Defective refrigerant circuit is causing thermistor temperature of 90˚C[194˚F] or more or -40˚C[-40˚F] or less. ⑤ Defective indoor controller board	①–③ Check resistance value of thermistor. For characteristics, refer to (P1) above. ② Check contact failure of connector (CN44) on the indoor controller board. Refer to 7-5. Turn the power on again and check restart after inserting connector again. ④ Check pipe <liquid> temperature with remote controller in test run mode. If pipe <liquid> temperature is extremely low (in cooling mode) or high (in heating mode), refrigerant circuit may have defective. ⑤ Check pipe <liquid> temperature with remote controller in test run mode. If there is extreme difference with actual pipe <liquid> temperature, replace indoor controller board. Turn the power off, and on again to operate after check.
P4 (5701)	**Contact failure of drain float switch (CN4F)** ① Extract when the connector of drain float switch is disconnected. (③ and ④ of connector CN4F is not short-circuited.) ② Constantly detected during operation.	① Contact failure of connector (Insert failure) ② Defective indoor controller board	① Check contact failure of float switch connector. Turn the power on again and check after inserting connector again. ② Operate with connector (CN4F) short-circuited. Replace indoor controller board if abnormality reappears.
P5	**Drain overflow protection operation** ① Suspensive abnormality, if drain float switch is detected to be underwater for 1 minute and 30 seconds continuously with drain pump on. Turn off compressor and indoor fan. ② Drain pump is abnormal if the condition above is detected during suspensive abnormality. ③ Constantly detected during drain pump operation.	① Malfunction of drain pump ② Defective drain Clogged drain pump Clogged drain pipe ③ Defective drain float switch Catch of drain float switch or malfunction of moving parts cause drain float switch to be detected under water (Switch On) ④ Defective indoor-controller board	① Check if drain-up machine works. ② Check drain function. ③ Remove drain float switch connector CN4F and check if it is short (Switch On) with the moving part of float switch UP, or OPEN with the moving part of float switch down. Replace float switch if it is short with the moving part of float switch down. ④ Replace indoor controller board if it is short-circuited between ③-④ of the drain float switch connector CN4F and abnormality reappears. It is not abnormal if there is no problem about the above-mentioned ①~④ Turn the power off, and on again to operate after check.

Error Code	Abnormal point and detection method	Cause	Countermeasure
P6	**Freezing/overheating protection is working** ① Freezing protection (Cooling mode) The unit is in six-minute resume prevention mode if pipe <liquid or condenser/evaporator> temperature stays under -15˚C[5˚F] for three minutes after the compressor started. Abnormal if it stays under -15˚C[5˚F] for three minutes again within 16 minutes after six-minute resume prevention mode. ② Overheating protection (Heating mode) The units is in six-minute resume prevention mode if pipe <Liquid or condenser / evaporator> temperature is detected as over 70˚C[158˚F] after the compressor started. Abnormal if the temperature of over 70˚C[158˚F] is detected again within 10 minutes after six-minute resume prevention mode.	(Cooling or drying mode) ① Clogged filter (reduced airflow) ② Short cycle of air path ③ Low-load (low temperature) operation beyond the tolerance range ④ Defective indoor fan motor • Fan motor is defective. • Indoor controller board is defective. ⑤ Defective outdoor fan control ⑥ Overcharge of refrigerant ⑦ Defective refrigerant circuit (clogs) (Heating mode) ① Clogged filter (reduced airflow) ② Short cycle of air path ③ Over-load (high temperature) operation beyond the tolerance range ④ Defective indoor fan motor • Fan motor is defective. • Indoor controller board is defective. ⑤ Defective outdoor fan control ⑥ Overcharge of refrigerant ⑦ Defective refrigerant circuit (clogs) ⑧ Bypass circuit of outdoor unit is defective.	(Cooling or drying mode) ① Check clogging of the filter. ② Remove shields. ④ Refer to 7-7. DC Fan motor (FAN MOTOR/ INDOOR CONTROLLER BOARD) ⑤ Check outdoor fan motor. ⑥⑦ Check operating condition of refrigerant circuit. (Heating mode) ① Check clogs of the filter. ② Remove shields. ④ Refer to 7-7. DC Fan motor (FAN MOTOR/ INDOOR CONTROLLER BOARD) ⑤ Check outdoor fan motor. ⑥~⑧Check operating condition of refrigerant circuit.
P8	**Pipe temperature** <Cooling mode> Detected as abnormal when the pipe temperature is not in the cooling range 3 minutes after compressor start and 6 minutes after the liquid or condenser/evaporator pipe is out of cooling range. Note 1) It takes at least 9 minutes. to detect. Note 2) Abnormality P8 is not detected in drying mode. Cooling range : -3 deg˚C(-5.4deg˚F) ≧ (TH-TH1) TH: Lower temperature between: liquid pipe temperature (TH2) and condenser/evaporator temperature (TH5) TH1: Intake temperature <Heating mode> When 10 seconds have passed after the compressor starts operation and the hot adjustment mode has finished, the unit is detected as abnormal when condenser/evaporator pipe temperature is not in heating range within 20 minutes. Note 3) It takes at least 27 minutes to detect abnormality. Note 4) It excludes the period of defrosting (Detection restarts when defrosting mode is over) Heating range : 3 deg˚C(5.4deg˚F) ≦ (TH5-TH1)	① Slight temperature difference between indoor room temperature and pipe <liquid or condenser / evaporator> temperature thermistor • Shortage of refrigerant • Disconnected holder of pipe <liquid or condenser / evaporator> thermistor • Defective refrigerant circuit ② Converse connection of extension pipe (on plural units connection) ③ Converse wiring of indoor/ outdoor unit connecting wire (on plural units connection) ④ Defective detection of indoor room temperature and pipe <condenser / evaporator> temperature thermistor ⑤ Stop valve is not opened completely.	①~④ Check pipe <liquid or condenser / evaporator> temperature with room temperature display on remote controller and outdoor controller circuit board. Pipe <liquid or condenser / evaporator> temperature display is indicated by setting SW2 of outdoor controller circuit board as follows. (Conduct temperature check with outdoor controller circuit board after connecting 'A-Control Service Tool(PAC-SK52ST)'.) ②③Check converse connection of extension pipe or converse wiring of indoor/outdoor unit connecting wire.

Error Code	Abnormal point and detection method	Cause	Countermeasure
P9	**Abnormality of pipe temperature thermistor / Condenser-Evaporator (TH5)** ① The unit is in three-minute resume protection mode if short/open of thermistor is detected. Abnormal if the unit does not get back to normal within three minutes. (The unit returns to normal operation, if it has normally reset.) ② Constantly detected during cooling, drying, and heating operation (except defrosting) Short: 90˚C[194˚F] or more Open: -40˚C[-40˚F] or less	① Defective thermistor characteristics ② Contact failure of connector (CN44) on the indoor controller board (Insert failure) ③ Breaking of wire or contact failure of thermistor wiring ④ Temperature of thermistor is 90˚C[194˚F] or more or -40˚C[-40˚F] or less caused by defective refrigerant circuit. ⑤ Defective indoor controller board	①–③ Check resistance value of thermistor. For characteristics, refer to (P1) above. ② Check contact failure of connector (CN44) on the indoor controller board. Refer to 7-5. Turn the power on and check restart after inserting connector again. ④ Operate in test run mode and check pipe <condenser / evaporator> temperature. If pipe <condenser / evaporator> temperature is extremely low (in cooling mode) or high (in heating mode), refrigerant circuit may have defect. ⑤ When no problems are found in ①-④ above, replace the indoor unit control board.
E0 or E4	**Remote controller transmission error(E0)/signal receiving error(E4)** ① Abnormal if main or sub remote controller can not receive normally any transmission from indoor unit of refrigerant address “0” for three minutes. (Error code : E0) ② Abnormal if sub remote controller could not receive for any signal for two minutes. (Error code: E0) ① Abnormal if indoor controller board can not receive normally any data from remote controller board or from other indoor controller board for three minutes. (Error code: E4) ② Indoor controller board cannot receive any signal from remote controller for two minutes. (Error code: E4)	① Contact failure at transmission wire of remote controller ② All remote controllers are set as “sub” remote controller. In this case, E0 is displayed on remote controller, and E4 is displayed at LED (LED1, LED2) on the outdoor controller circuit board. ③ Mis-wiring of remote controller ④ Defective transmitting receiving circuit of remote controller ⑤ Defective transmitting receiving circuit of indoor controller board of refrigerant address “0” ⑥ Noise has entered into the transmission wire of remote controller.	① Check disconnection or looseness of indoor unit or transmission wire of remote controller. ② Set one of the remote controllers “main” if there is no problem with the action above. ③ Check wiring of remote controller. • Total wiring length: max.500m (Do not use cable × 3 or more) • The number of connecting indoor units: max.16units • The number of connecting remote controller: max.2units When it is not the above-mentioned problem of ①~③ ④ Diagnose remote controllers. a) When “RC OK” is displayed, Remote controllers have no problem. Turn the power off, and on again to check. If abnormality generates again, replace indoor controller board. b) When “RC NG” is displayed, Replace remote controller. c) When “RC E3” is displayed, d) When “ERC 00-06” is displayed, [c),d)→Noise may be causing abnormality.] ∗ If the unit is not normal after replacing indoor controller board in group control, indoor controller board of address “0” may be abnormal.
E3 or E5	**Remote controller transmission error(E3)/signal receiving error(E5)** ① Abnormal if remote controller could not find blank of transmission path for six seconds and could not transmit. (Error code: E3) ② Remote controller receives transmitted data at the same time, compares the data, and when detecting it, judges different data to be abnormal 30 continuous times. (Error code: E3) ① Abnormal if indoor controller board could not find blank of transmission path. (Error code: E5) ② Indoor controller board receives transmitted data at the same time, compares the data,and when detecting it, judges different data to be abnormal 30 continuous times. (Error code: E5)	① Two remote controller are set as “main.” (In case of 2 remote controllers) ② Remote controller is connected with two indoor units or more. ③ Repetition of refrigerant address ④ Defective transmitting receiving circuit of remote controller ⑤ Defective transmitting receiving circuit of indoor controller board ⑥ Noise has entered into transmission wire of remote controller.	① Set a remote controller to main, and the other to sub. ② Remote controller is connected with only one indoor unit. ③ The address changes to a separate setting. ④~⑥ Diagnose remote controller. a) When “RC OK”is displayed, remote controllers have no problem. Turn the power off,and on again to check. When becoming abnormal again, replace indoor controller board. b)When “RC NG”is displayed, replace remote controller. c)When “RC E3”or “ERC 00-66”is displayed, noise may be causing abnormality.

Error Code	Abnormal point and detection method	Cause	Countermeasure
E6	**Indoor/outdoor unit communication error (Signal receiving error)** ① Abnormal if indoor controller board cannot receive any signal normally for six minutes after turning the power on. ② Abnormal if indoor controller board cannot receive any signal normally for three minutes. ③ Consider the unit as abnormal under the following condition: When two or more indoor units are connected to an outdoor unit, indoor controller board cannot receive a signal for three minutes from outdoor controller circuit board, a signal which allows outdoor controller circuit board to transmit signals.	① Contact failure, short circuit or, mis-wiring (converse wiring) of indoor/outdoor unit connecting wire ② Defective transmitting receiving circuit of indoor controller board ③ Defective transmitting receiving circuit of indoor controller board ④ Noise has entered into indoor/ outdoor unit connecting wire.	* Check LED display on the outdoor control circuit board. (Connect A-control service tool, PAC-SK52ST.) Refer to Outdoor manual. ① Check disconnection or looseness of indoor/ outdoor unit connecting wire of indoor unit or outdoor unit. Check all the units in case of twin triple indoor unit system. ②-④ Turn the power off, and on again to check. If abnormality generates again, replace indoor controller board or outdoor controller circuit board. * Other indoor controller board may have defect in case of twin triple indoor unit system.
E7	**Indoor/outdoor unit communication error (Transmitting error)** Abnormal if "1" receiving is detected 30 times continuously though indoor controller board has transmitted "0".	① Defective transmitting receiving circuit of indoor controller board ② Noise has entered into power supply. ③ Noise has entered into outdoor control wire.	①-③ Turn the power off, and on again to check. If abnormality generates again, replace indoor controller board.
Fb	**Indoor controller board** Abnormal if data cannot be read normally from the nonvolatile memory of the indoor controller board.	① Defective indoor controller board	① Replace indoor controller board.
E1 or E2	**Remote controller control board** ① Abnormal if data cannot be read normally from the nonvolatile memory of the remote controller control board. (Error code: E1) ② Abnormal if the clock function of remote controller cannot be operated normally. (Error code: E2)	① Defective remote controller	① Replace remote controller.
PA (2500)	**Water leakage** This detection is performed during the operation (stop, heating, fan, or error stop mode etc.) other than cooling and dry. ① When a) and b) are found, water leakage occurs. a) Pipe <liquid> temperature - inlet temperature < -10˚C[14˚F] for 30 minutes b) When drain float switch is detected to be soaked in the water for 15 minutes or more. * When drain float switch is detected to be NOT soaked in the water, each counting of a) and b) is cleared. **<u>*When this error is detected, the error will not be reset until the main power is reset.</u>**	① Mis-piping of extension pipes (When connected with multiple units) ② Mis-wiring of indoor/outdoor unit connecting wire (When connected with multiple units) ③ Detection failure of the indoor unit inlet/ pipe <liquid> thermistor ④ Drain pump failure ⑤ Drainage failure · Clogged drain pump · Clogged drain pipe ⑥ Drain float switch failure · Drain float switch is detected to be soaked in the water (ON status) due to the operation failure of the moving parts. · Contact failure of drain float switch connector (Loose connector)	①Check the extension pipes for mis-piping. ②Check the Indoor/outdoor unit connecting wire for mis-wiring. ③Check room temperature display on remote controller and indoor pipe <liquid> temperature. (Refer to the countermeasure on P2.) ④Check if drain-up machine works. ⑤ Check drain function. ⑥Check drain float switch. (Refer to the countermeasure on P4 and P5.)

7-4. TROUBLESHOOTING BY INFERIOR PHENOMENA

Note: Refer to the manual of outdoor unit for the detail of remote controller.

Phenomena	Cause	Countermeasure
(1)LED2 on indoor controller board is off.	• When LED1 on indoor controller board is also off. ① Power supply of rated voltage is not supplied to outdoor unit.	① Check the voltage of outdoor power supply terminal block (L, N) or (L_3, N). • When AC 208~230V is not detected. Check the power wiring to outdoor unit and the breaker. • When AC 208~230V is detected. —Check ② (below).
	② Defective outdoor controller circuit board	② Check the voltage between outdoor terminal block S1 and S2. • When AC 208~230V is not detected. Check the fuse on outdoor controller circuit board. Check the wiring connection. • When AC 208~230V is detected. —Check ③ (below).
	③ Power supply of 208~230V is not supplied to indoor unit.	③ Check the voltage between indoor terminal block S1 and S2. • When AC 208~230V is not detected. Check indoor/outdoor unit connecting wire for mis-wiring. • When AC 208~230V is detected. —Check ④ (below).
	④ Defective indoor controller board	④ Check the fuse on indoor controller board. Check the wiring connection. If no problem are found, indoor controller board is defective.
(2)LED2 on indoor controller board is blinking.	• When LED1 on indoor controller board is also blinking. Connection failure of indoor/outdoor unit connecting wire • When LED1 is lit.	Check indoor/outdoor unit connecting wire for connection failure.
	① Mis-wiring of remote controller wires Under twin triple indoor unit system, 2 or more indoor units are wired together.	① Check the connection of remote controller wires in case of twin triple indoor unit system. When 2 or more indoor units are wired in one refrigerant system, connect remote controller wires to one of those units.
	② Refrigerant address for outdoor unit is wrong or not set. Under grouping control system, there are some units whose refrigerant address is 0.	② Check the setting of refrigerant address in case of grouping control system. If there are some units whose refrigerant addresses are 0 in one group, set one of the units to 0 using SW1 (3-6) on outdoor controller circuit board.
	③ Short-cut of remote controller wires ④ Defective remote controller	③④ Remove remote controller wires and check LED2 on indoor controller board. • When LED2 is blinking, check the short-cut of remote controller wires. • When LED2 is lit, connect remote controller wires again and: if LED2 is blinking, remote controller is defective; if LED2 is lit, connection failure of remote controller terminal block etc. has returned to normal.

7-5. TEST POINT DIAGRAM

7-5-1. Indoor controller board

PEA-A12AA
PEA-A18AA

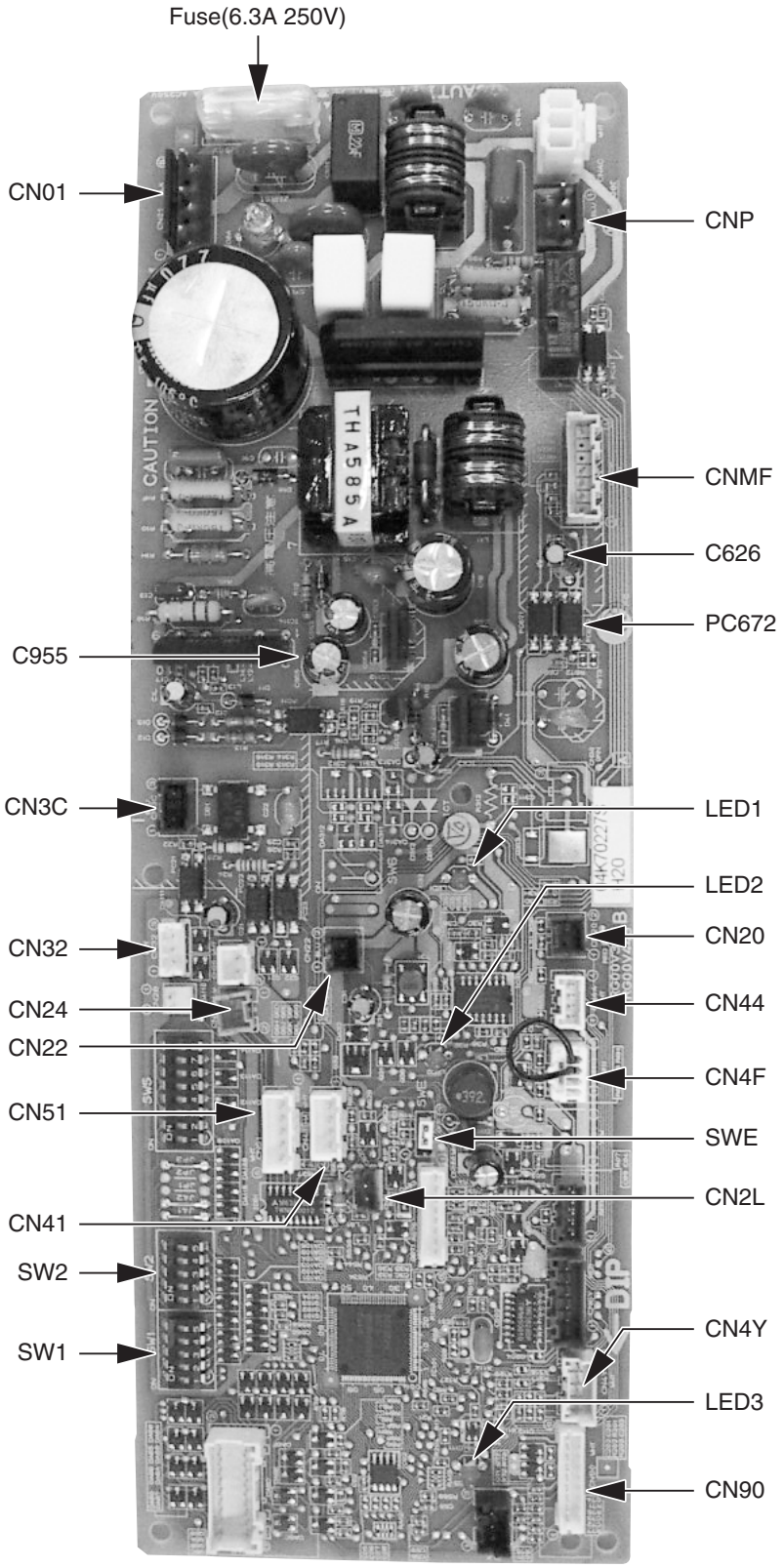

CN01	Power supply voltage (208 - 230VAC)
SWE	Emergency operation
SW1	Model selection
SW2	Capacity setting
CN32	Remote start/stop adapter
CN24	Heater control (12VDC)
CN22	For MA remote controller cable connection (10 - 13 VDC (Between 1 and 3.))
CN51	Centralized control
CN41	JAMA standard HA terminal A
CN44	Thermistor (liquid/condenser/evaporator temperature)
CN4F	Float thermistor
CN20	Thermistor (Inlet temperature)
CN3C	Indoor-outdoor transmission (0 - 24VDC)
CNMF	Fan motor output 1 - 4: 294 - 340 VDC 5 - 4: 15 VDC 6 - 4: 0 - 6.5 VDC 7 - 4: Stop 0 or 15 VDC Run 7.5 VDC (0 - 15 pulse)
CNP	Drain-up mechanism output (200VAC)
CN2L	LOSSNAY
CN4Y	For Fan control
CN90	Wireless remote controller

(*1)

V_{FG}	Voltage on the (-) side of PC672 and C955 (Same with the voltage between 7 (+) and 4 (-) of CNMF)
V_{CC}	Voltage between the C955 pins 15 VDC (Same with the voltage between 5 (+) and 4 (-) of CNMF)
V_{sp}	Voltage between the C626 pins 0VDC (with the fan stopped) 1 - 6.5VDC (with the fan in operation) (Same with the voltage between 6 (+) and 4 (-) of CNMF)

PEA-A12AA4, PEA-A12AA6
PEA-A18AA4, PEA-A18AA6

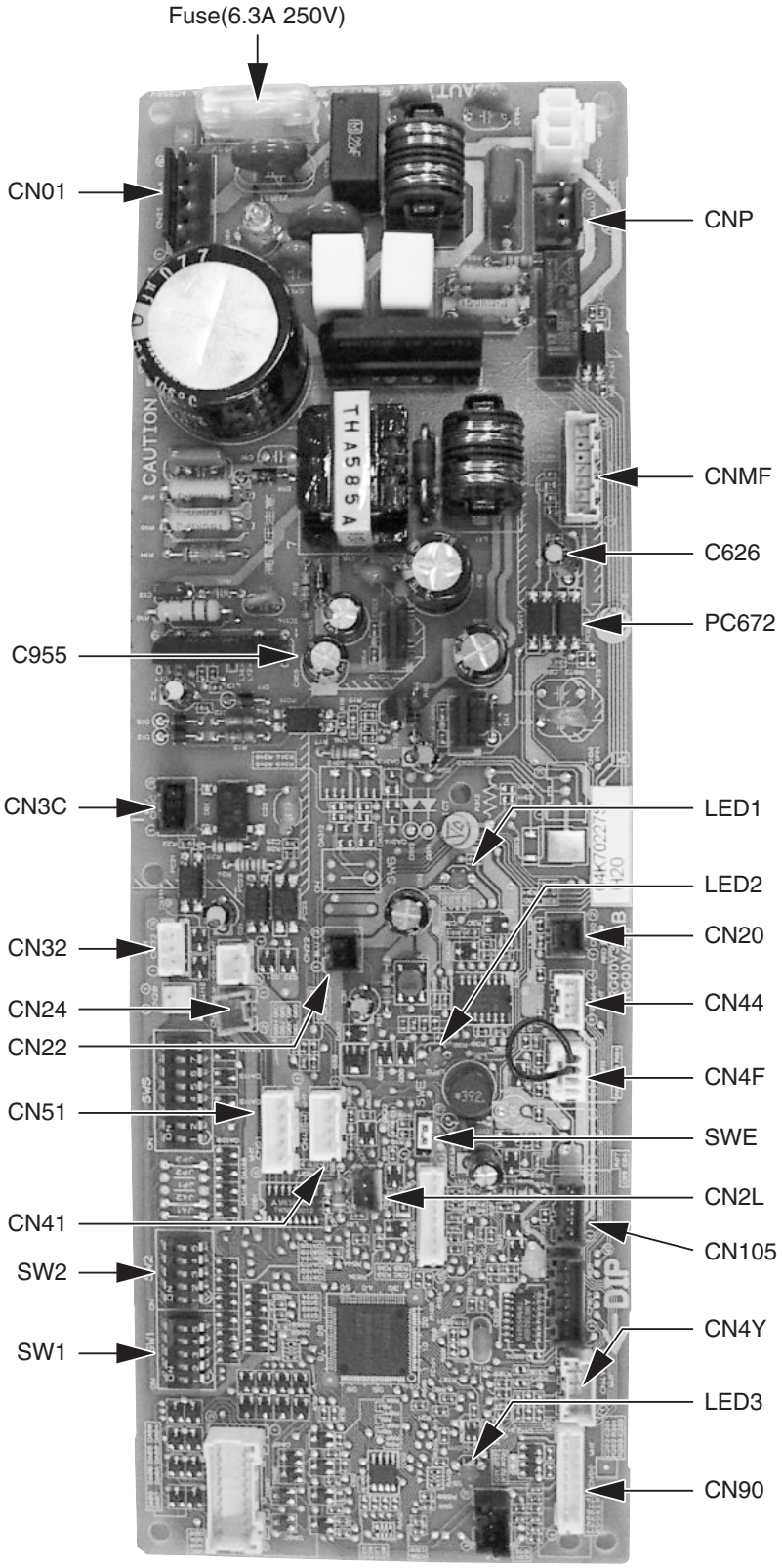

CN01 Power supply voltage (208 - 230VAC)

SWE Emergency operation

SW1 Model selection

SW2 Capacity setting

CN105 Radio frequency interface

CN32 Remote start/stop adapter

CN24 Heater control (12VDC)

CN22 For MA remote controller cable connection
(10 - 13 VDC (Between 1 and 3.))

CN51 Centralized control

CN41 JAMA standard HA terminal A

CN44 Thermistor
(liquid/condenser/evaporator temperature)

CN4F Float thermistor

CN20 Thermistor (Inlet temperature)

CN3C Indoor-outdoor transmission
(0 - 24VDC)

CNMF Fan motor output
1 - 4: 294 - 340 VDC
5 - 4: 15 VDC
6 - 4: 0 - 6.5 VDC
7 - 4: Stop 0 or 15 VDC
Run 7.5 VDC
(0 - 15 pulse)

CNP Drain-up mechanism output (200VAC)

CN2L LOSSNAY

CN4Y For Fan control

CN90 Wireless remote controller

(*1)

V_{FG} Voltage on the (-) side of PC672 and C955
(Same with the voltage between 7 (+) and 4 (-) of CNMF)

V_{CC} Voltage between the C955 pins 15 VDC
(Same with the voltage between 5 (+) and 4 (-) of CNMF)

V_{sp} Voltage between the C626 pins
0VDC (with the fan stopped)
1 - 6.5VDC (with the fan in operation)
(Same with the voltage between 6 (+) and 4 (-) of CNMF)

7-6. TROUBLE CRITERION OF MAIN PARTS
PEA-A12AA(4), (6)
PEA-A18AA(4), (6)

<table>
<tr><th>Part name</th><th>Check method and criterion</th></tr>
<tr><td>Room temperature thermistor (TH1)</td><td rowspan="3">Measure the resistance with a tester.
(Part temperature 10°C(50°F) ~ 30°C(86°F))
<table><tr><th>Normal</th><th>Abnormal</th></tr><tr><td>8kΩ~20kΩ</td><td>Opened or short-circuited</td></tr></table></td></tr>
<tr><td>Pipe temperature thermistor/liquid (TH2)</td></tr>
<tr><td>Condenser/evaporator temperature thermistor (TH5)</td></tr>
<tr><td>Wiring diagram</td><td> 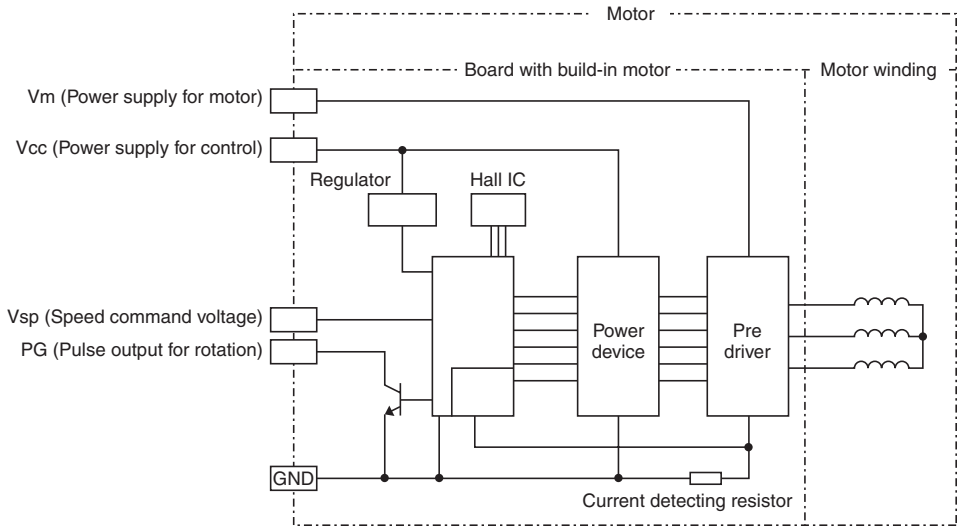
</td></tr>
</table>

7-7. DC FAN MOTOR (FAN MOTOR/ INDOOR CONTROLLER BOARD)

Check method of DC fan motor (fan motor / indoor controller circuit board)

① Notes

· High voltage is applied to the connecter (CNMF) for the fan motor. Give attention to the service.

· Do not pull out the connector (CNMF) for the motor with the power supply on.
(It causes trouble of the indoor controller circuit board and fan motor.)

② Self check

Symptom : The indoor fan cannot turn around.

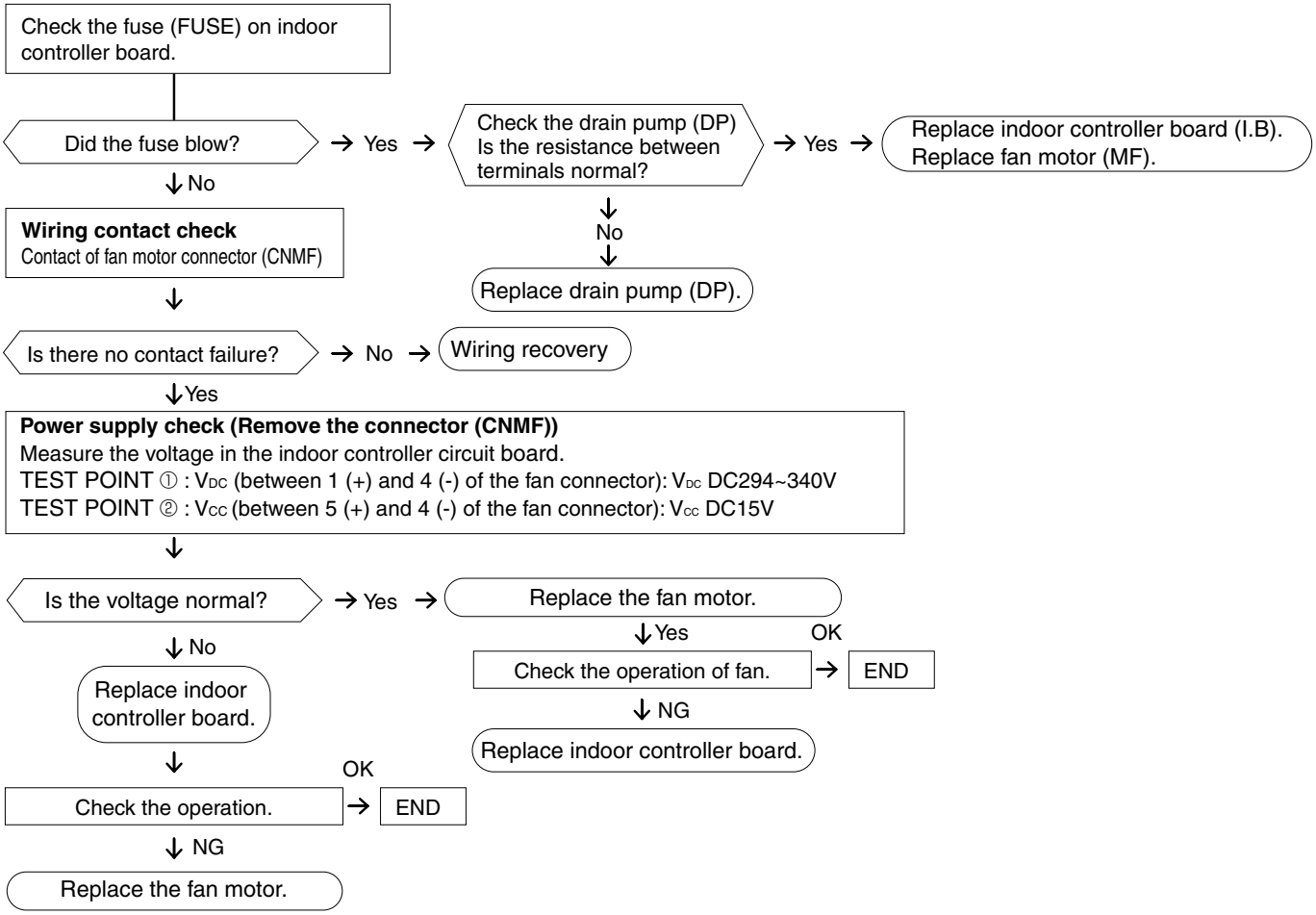

8 DISASSEMBLY PROCEDURE

Exercise caution when removing heavy parts.

PEA-A12AA(4), (6)
PEA-A18AA(4), (6)

1. Control box

1. Removing the control box cover
(1) Remove the two fixing screws on the cover (A) to remove it.

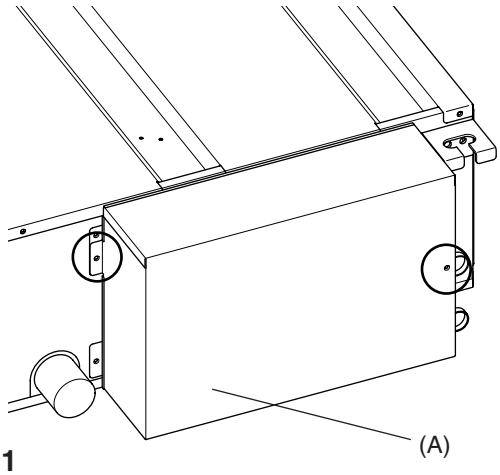

Fig. 1

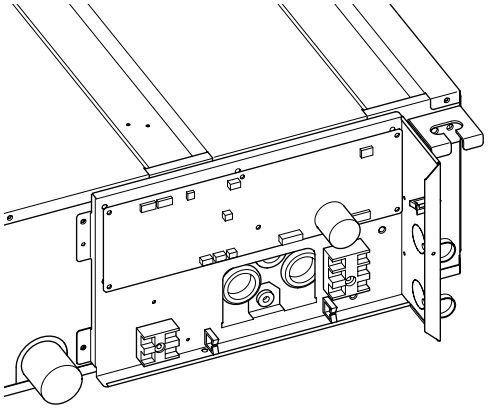

Fig. 2

2. Thermistor (Intake air)

1. Remove the control box cover according to the procedure in section [1].
(1) Pull out the thermistor holder (B) and thermistor (C) on the control box.

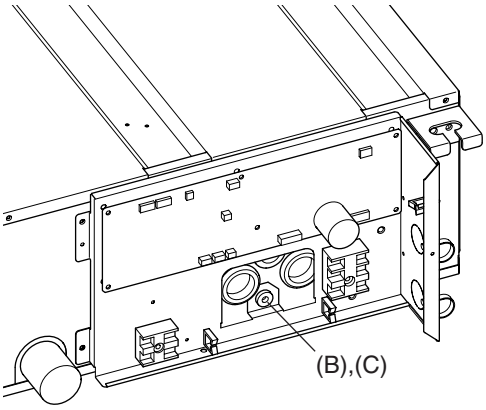

Fig. 3

Exercise caution when removing heavy parts.

3. Drainpan

1. Removing the filter and the bottom plate
(1) Push up the tab on the filter, and pull out the filter in the direction of the arrow 1.
(2) Remove the fixing screws on the bottom plate (D), (E) to remove it.

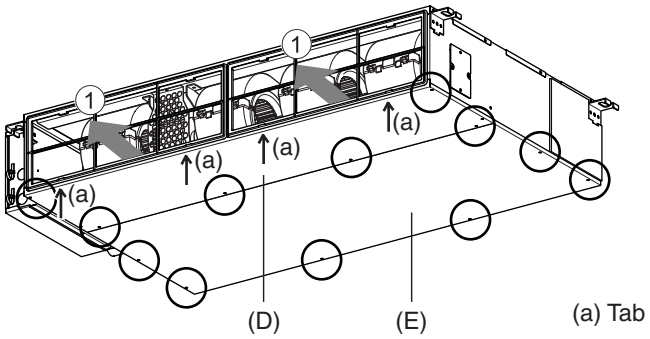

Fig. 4

2. Removing the drainpan
(1) Pull out the drain pan in the direction of the arrow 1.

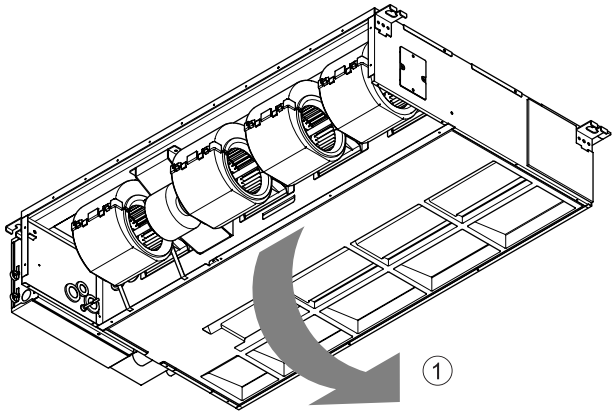

Fig. 5

Note
- **Drain the water out of the drain pan before removing it.**
- **To avoid dew condensation, use insulated screws in the places marked with circles in Fig. 6.**

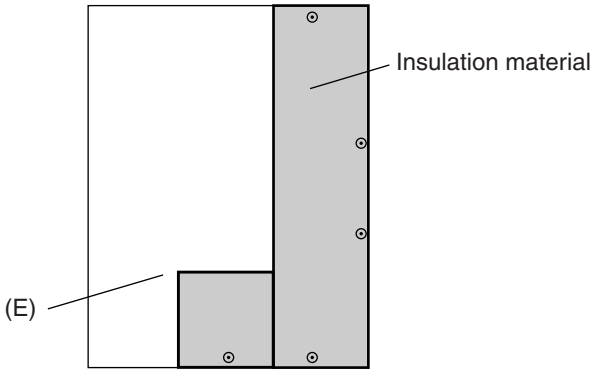

Fig. 6

Exercise caution when removing heavy parts.

4. Thermistor (Condenser / evaporator) (Liquid pipe)

1. Remove the drain pan according to the procedure in section [3].
2. Removing the Heat exchanger cover

(1) Remove the four fixing screws on the heat exchanger cover (F) to remove it.

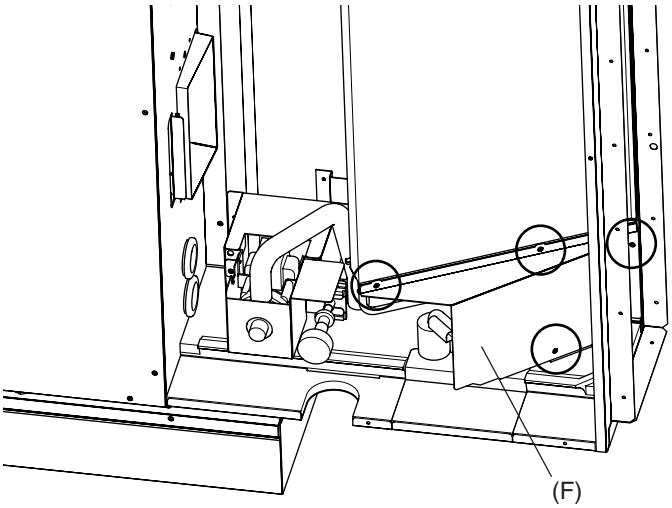

Fig. 7

3. Removing the thermistor

(1) Remove the thermistor (G) from the thermistor holder (H) on the copper tube.

Thermistor size
Liquid pipe: ø3/8inch(ø8mm)
Condenser / evaporator: ø1/4inch(ø6mm)

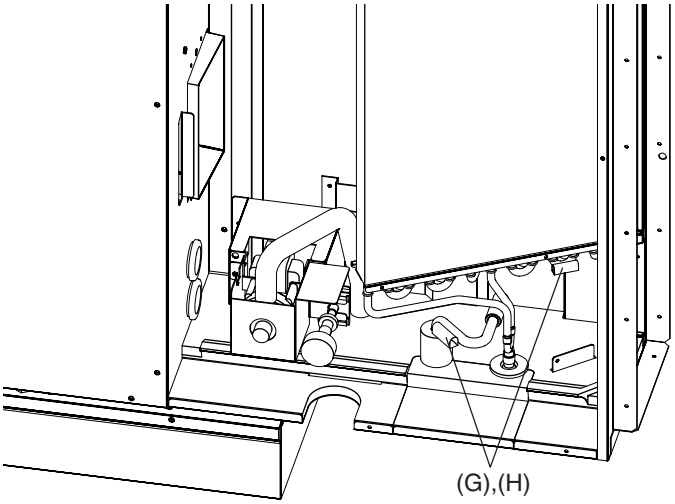

Fig. 8

Exercise caution when removing heavy parts.

5. Fan and fan motor

1. Removing the filter and the bottom plate
(1) Push down the tab on the filter, and pull out the filter in the direction of the arrow 1.
(2) Remove the fixing screws on the bottom plate (J) to remove it.

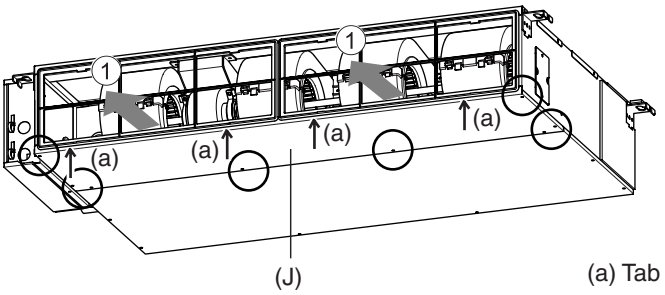

Fig. 9

2. Removing the fan casing (bottom half)
(1) Squeeze the tabs on the fan casing to remove it in the direction of arrow 2.

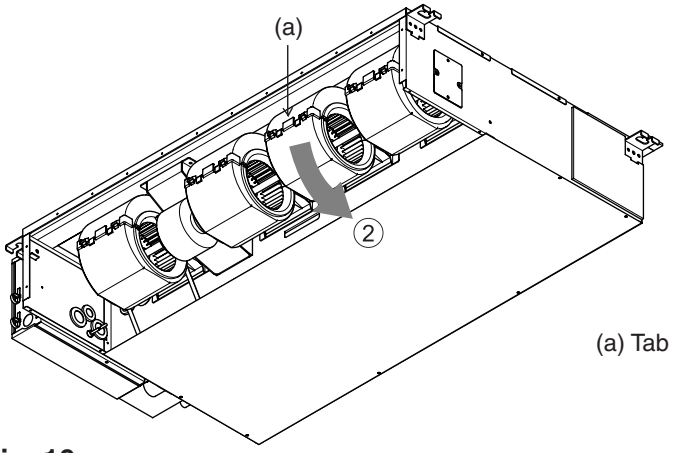

Fig. 10

3. Removing the motor cable
(1) Remove the motor cable threw the rubber bush.

4. Removing the fan motor and the Sirocco fan
(1) Remove the two motor fixing screws to remove the motor and the Sirocco fan in the direction of arrow 3.

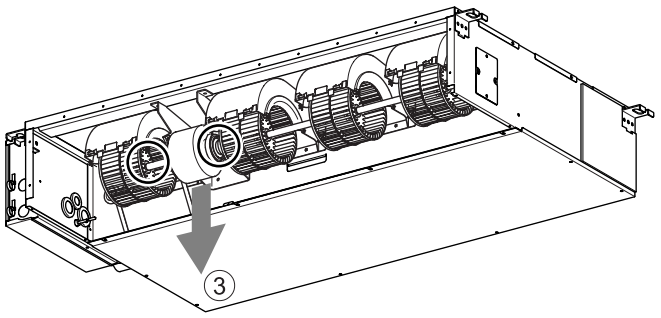

Fig. 11

(2) Remove the four fan case fixing screws to take the top half of the fan casing off.

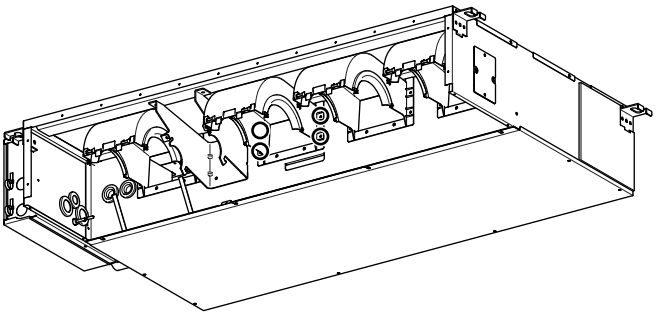

Fig. 12

Exercise caution when removing heavy parts.

6. Bearing [PEA-A18AA(4), (6) model only]

1. Removing the bearing

(1) Remove the two fixing screws on the bearing cover (K) to remove it.

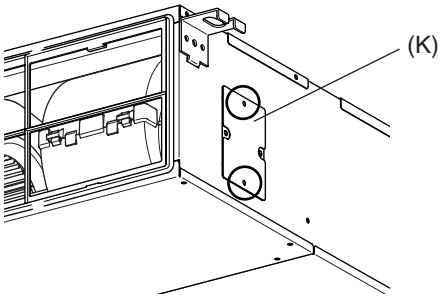

Fig. 13

(2) Remove the two bearing retainer screws to remove the bearing.

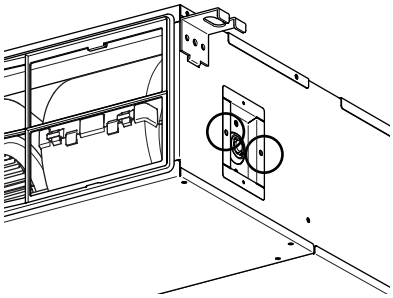

Fig. 14

7. Heat exchanger

1. Remove the drain pan according to the procedure in section [3].
2. Remove the heat exchanger cover according to the procedure in section [4] 2.
3. Removing the cover

(1) Remove the two fixing screws on the cover (L) to remove it.

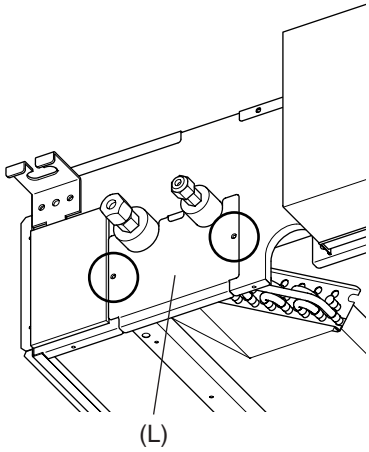

Fig. 15

4. Removing the Heat exchanger

(1) Remove the fixing screws on the heat exchanger (M) to remove it.

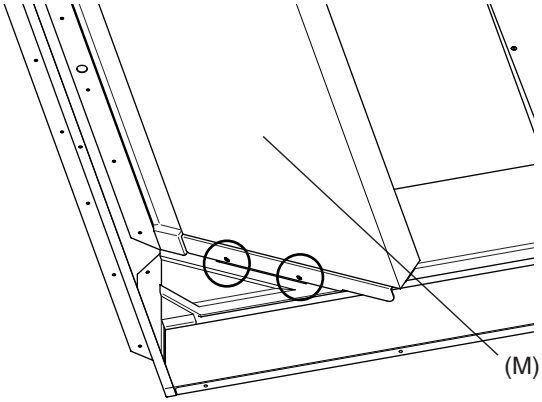

Fig. 16

MITSUBISHI ELECTRIC CORPORATION

http://Global.MitsubishiElectric.com

HWE0807D

New publication effective Jun. 2015
Specifications subject to change without notice