Changes for the Better

SERVICE PARTS LIST FOR MITSUBISHI ELECTRIC PACKAGED AIR-CONDITIONERS

Series : PEAD-A•AA

July 2009

BWE09180

INDEX
PEAD-A24AA PEAD-A30AA PEAD-A36AA PEAD-A42AA

MITSUBISHI ELECTRIC

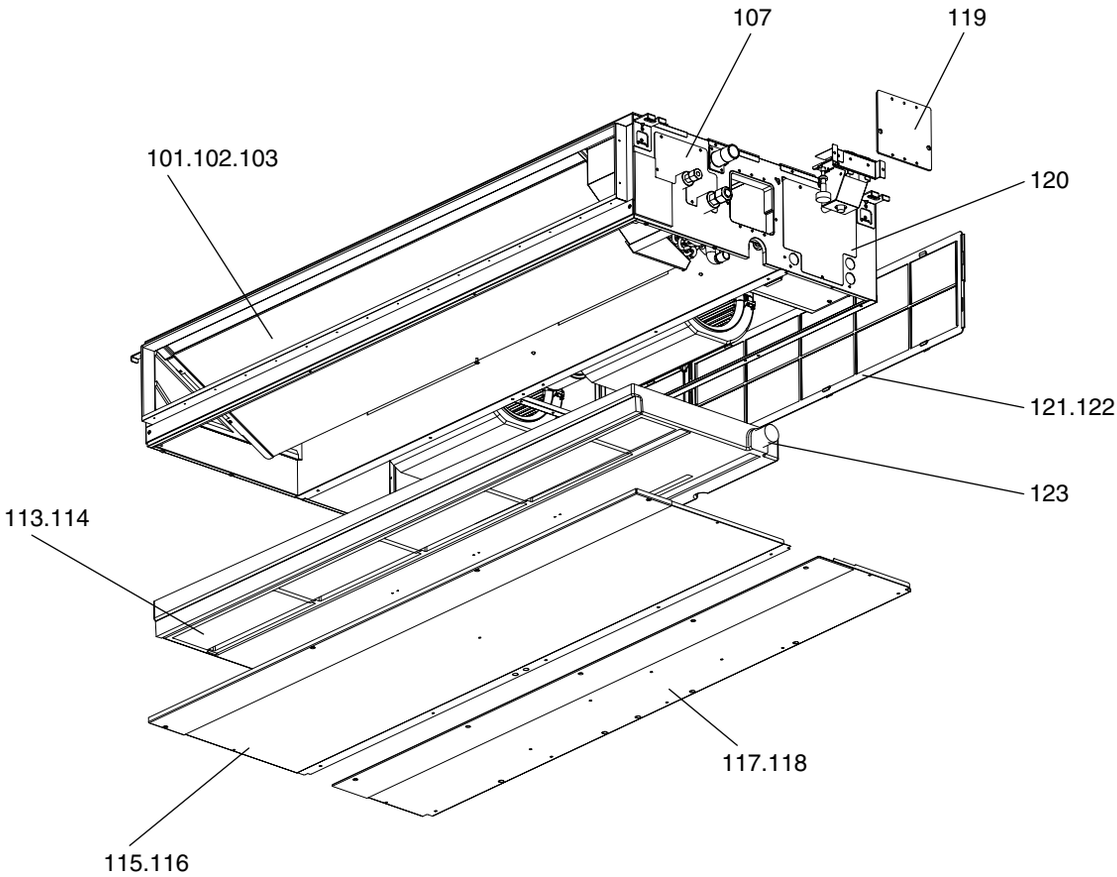
107
119
101.102.103
120
121.122
123
113.114
117.118
115.116

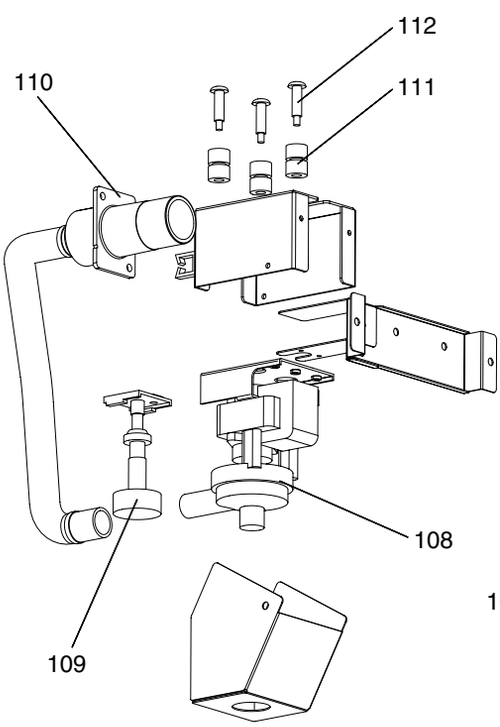
112
110
111
108
109

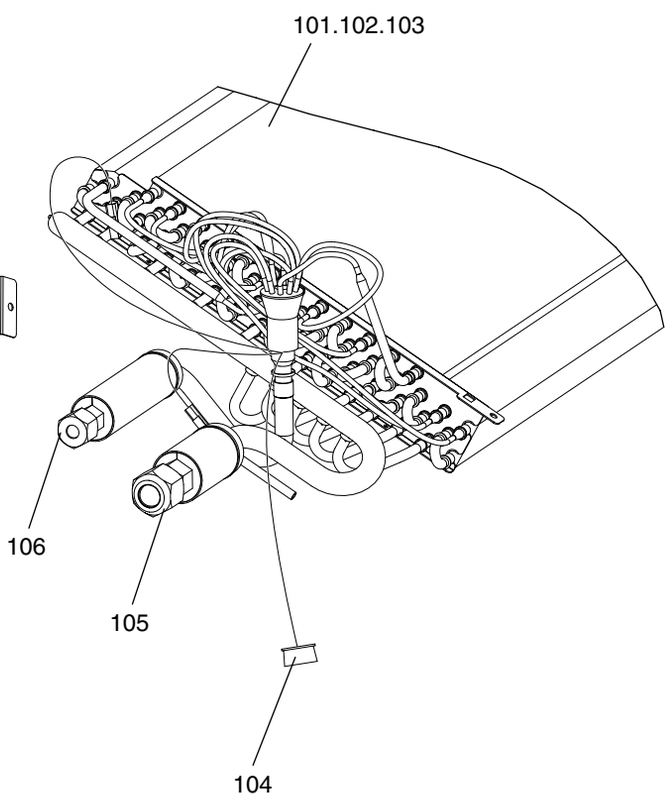
101.102.103
106
105
104

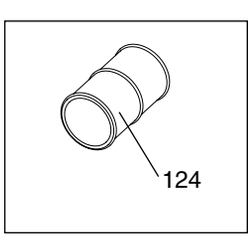
124

No.	Part No.	G : RoHS Apply Only W : RoHS Apply by Running Change	Part Name	Spec.	PEAD-A24AA	PEAD-A30AA	PEAD-A36AA	PEAD-A42AA			Dwg. No.	Price	Revision History
101	R61 335 480		HEAT EXCHANGER		1	1					KB00A211G01		
102	R61 337 480		HEAT EXCHANGER				1				KB00A211G02		
103	R61 344 480		HEAT EXCHANGER					1			KB00A212G01		
104	R61 100 200		THERMISTOR		1	1	1	1			KB71B945H03		
105	R63 8G1 122	G	NUT FLARE 5/8		1	1	1	1			BG12S826H01		
106	R63 8G0 122	G	NUT FLARE 3/8		1	1	1	1			Z211A143H06		
107	R61 066 690		COVER PIPE ASSY		1	1	1	1			KB00M203G01		
108	R61 011 539		PUMP	PLD	1	1	1	1			KB56B953H03		
109	R61 012 541		FLOAT SWITCH	#FS-0250	1	1	1	1			KB68B944H02		
110	R61 004 218		SOCKET ASSY		1	1	1	1			KB00R308G04		
111	R61 018 104	G	CUSHION		3	3	3	3			DB26F013L01		
112	R61 002 019	G	SCREW SPECIAL M4X 6		3	3	3	3			Y112J017H05		
113	R61 058 529		DRAIN PAN ASSY P24		1	1					KB00T352G03		
114	R61 059 529		DRAIN PAN ASSY P36				1	1			KB00T352G04		
115	R61 132 651		PANEL UD1 ASSY P63		1	1					KB00R305G03		
116	R61 133 651		PANEL UD1 ASSY P100				1	1			KB00R305G04		
117	R61 137 651		PANEL UD2 ASSY P63		1	1					KB00R306G03		
118	R61 138 651		PANEL UD2 ASSY P100				1	1			KB00R306G04		
119	R61 067 690		COVER ASSY		1	1	1	1			KB00M197G01		
120	R61 068 690		COVER BOX ASSY		1	1	1	1			KB00T337G01		
121	R61 011 500		FILTER 550		2	2					KB35B880G01		
122	R61 012 500		FILTER 700				2	2			KB35B882G01		
123	R61 002 558		PLUG	RUBBER	2	2	2	2			KB26H049H01		
124	R61 005 218		SOCKET		1	1	1	1			BB25D449H01		

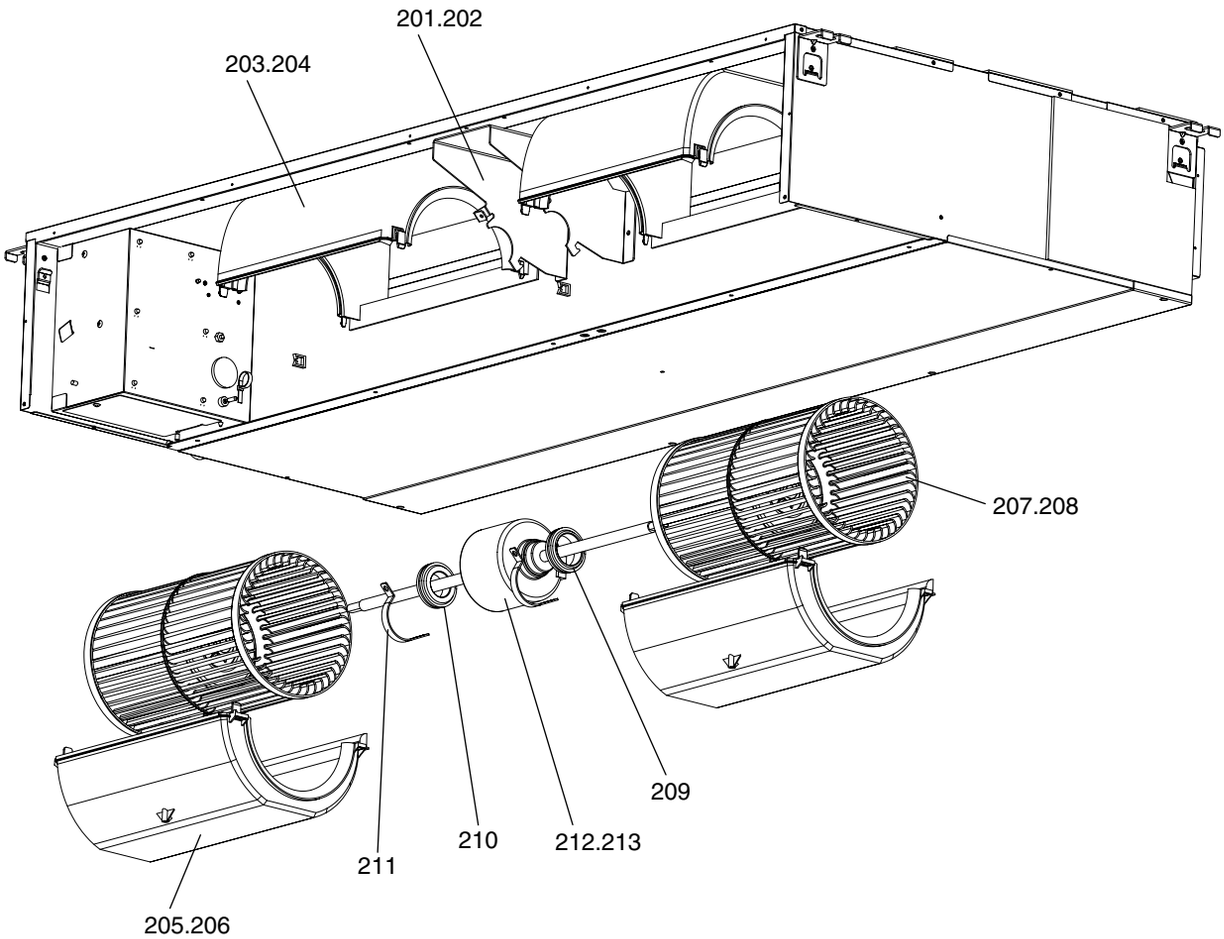

No.	Part No.	G : RoHS Apply Only W : RoHS Apply by Running Change	Part Name	Spec.	PEAD-A24AA	PEAD-A30AA	PEAD-A36AA	PEAD-A42AA			Dwg. No.	Price	Revision History
201	R61 023 128		MOTOR BASE P20		1	1					KB02B861H02		
202	R61 024 128		MOTOR BASE P100				1	1			KB02B862H02		
203	R61 006 129		FAN CASE U		2	2					KB25A145H01		
204	R61 007 129		FAN CASE U				2	2			KB25A144H01		
205	R61 008 129		FAN CASE L		2	2					KB25A147H01		
206	R61 009 129		FAN CASE L				2	2			KB25A146H01		
207	R61 007 114		SIROCCO FAN 200 ASSY		2	2					KB00R101G01		
208	R61 008 114		SIROCCO FAN 320 ASSY				2	2			KB00R102G01		
209	R61 001 505	G	RUBBER MOUNT L		1	1					KB31D833H01		
210	R61 002 505	G	RUBBER MOUNT R		1	1	2	2			KB31D833H02		
211	R63 652 131	G	ATTACHMENT		2	2	2	2			W353715H01		
212	R61 093 220		MOTOR P63		1	1					KB61B962H03		
213	R61 094 220		MOTOR P100				1	1			KB61B963H03		

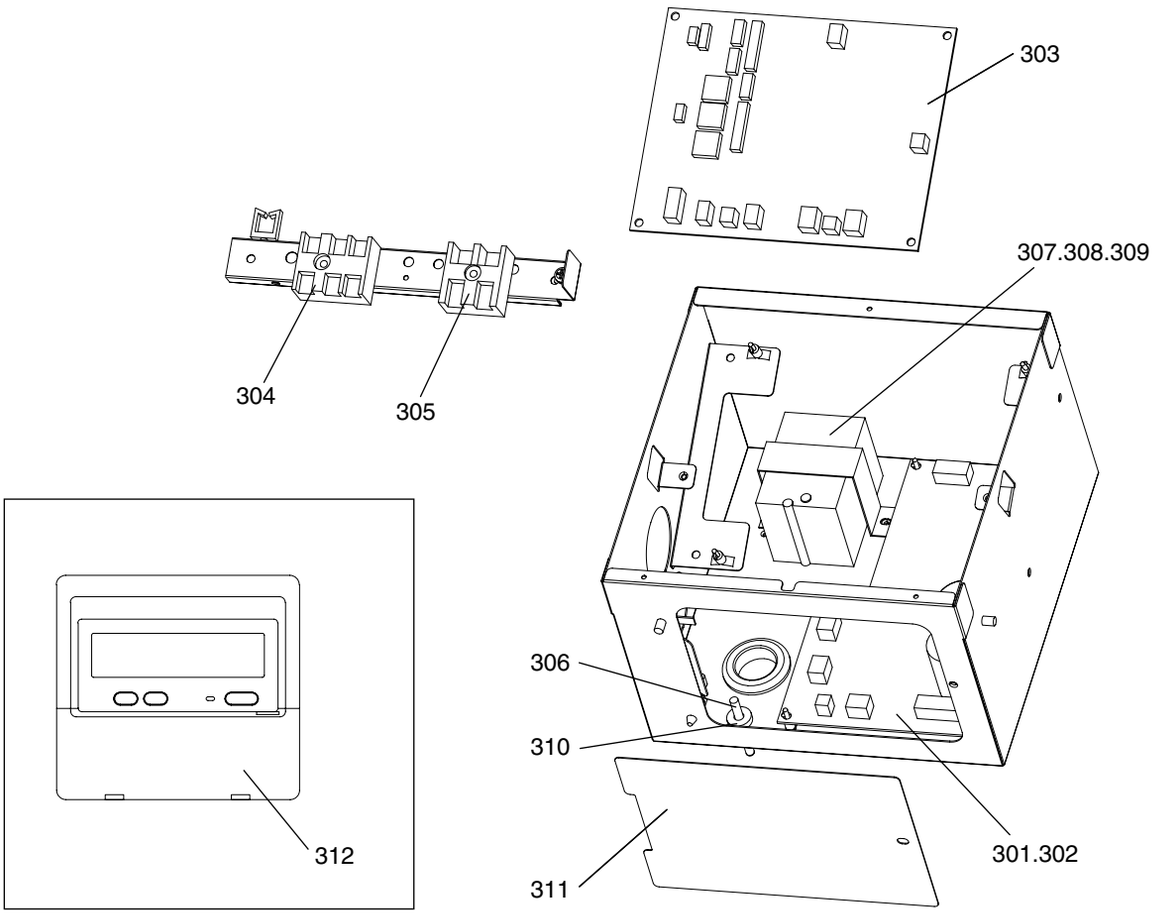

No.	Part No.	G : RoHS Apply Only W : RoHS Apply by Running Change	Part Name	Spec.	PEAD-A24AA	PEAD-A30AA	PEAD-A36AA	PEAD-A42AA			Dwg. No.	Price	Revision History
301	R61 124 280		PCA BOARD	PW 3A	1	1					KE80C349G03		
302	R61 125 280		PCA BOARD	PW 5A			1	1			KE80C349G04		
303	R61 127 280		PCA BOARD	INDOOR CONTROL	1	1	1	1			KE80C349G02		
304	R61 025 246		TERMINAL BLOCK ASSY		1	1	1	1			BH00C267G02		
305	R61 023 246		TERMINAL BLOCK		1	1	1	1			BH73L021H01		
306	R61 103 200		THERMISTOR-S	250XAP	1	1	1	1			RG71J628H01		
307	R61 018 259		REACTOR	3A3	1						KE65D486H02		
308	R61 019 259		REACTOR	3A6		1					KE65D487H01		
309	R61 020 259		REACTOR	5A6			1	1			KE65D488H01		
310	R61 003 104	W	CORD BUSH		1	1	1	1			P695114X01		
311	R61 069 690		BOX UNDER COVER		1	1	1	1			KB02K887H01		
312	R61 040 304		REMOTE CONTROLLER		1	1	1	1			KF00D079H01		

MITSUBISHI ELECTRIC CORPORATION
HEAD OFFICE: TOKYO BLDG., 2-7-3, MARUNOUCHI, CHIYODA-KU, TOKYO 100-8310, JAPAN

BWE09180 (20090731)