MITSUBISHI ELECTRIC

Changes for the Better

SPLIT-TYPE, HEAT PUMP AIR CONDITIONERS

2014

R410A

SERVICE MANUAL

Series PEAD Ceiling Concealed

Model name

<Indoor unit>

PEAD-A24AA5
PEAD-A30AA5
PEAD-A36AA5
PEAD-A42AA5

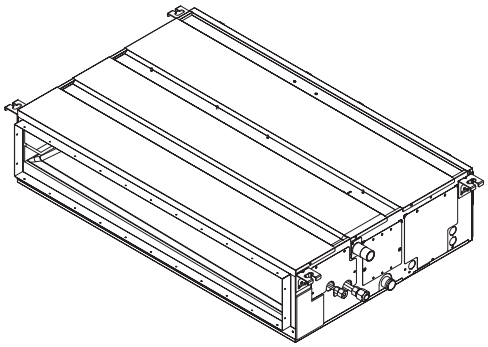

INDOOR UNIT

Mr.SLIM™

CONTENTS

1. SAFETY PRECAUTION 2
2. PART NAMES AND FUNCTIONS 3
3. SPECIFICATION 4
4. FAN PERFORMANCE AND CORRECTED AIR FLOW 6
5. SOUND PRESSURE LEVELS 11
6. OUTLINES & DIMENSIONS 15
7. WIRING DIAGRAM 17
8. REFRIGERANT SYSTEM DIAGRAM 18
9. HEATER CONTROL 19
10. TROUBLESHOOTING 22
11. DISASSEMBLY PROCEDURE 35

1 SAFETY PRECAUTION

1-1. ALWAYS OBSERVE FOR SAFETY

Before obtaining access to terminal, all supply circuits must be disconnected.

1-2. CAUTIONS RELATED TO NEW REFRIGERANT

Cautions for units utilising refrigerant R410A

Use new refrigerant pipes.

In case of using the existing pipes for R22, be careful with the followings.
· For A36 and A42, be sure to perform replacement operation before test run.
· Change flare nut to the one provided with this product. Use a newly flared pipe.
· Avoid using thin pipes.

**Make sure that the inside and outside of refrigerant piping is clean and it has no contamination such as sulfur hazardous for use, oxides, dirt, shaving particles, etc.
In addition, use pipes with specified thickness.**

Contamination inside refrigerant piping can cause deterioration of refrigerant oil etc.

Store the piping to be used indoors during installation and both ends of the piping sealed until just before brazing. (Leave elbow joints, etc. in their packaging.)

If dirt, dust or moisture enters into refrigerant cycle, that can cause deterioration of refrigerant oil or malfunction of compressor.

Use ester oil, ether oil or alkylbenzene oil (small amount) as the refrigerant oil applied to flares and flange connections.

If large amount of mineral oil enters, that can cause deterioration of refrigerant oil etc.

Charge refrigerant from liquid phase of gas cylinder.

If the refrigerant is charged from gas phase, composition change may occur in refrigerant and the efficiency will be lowered.

Do not use refrigerant other than R410A.

If other refrigerant (R22 etc.) is used, chlorine in refrigerant can cause deterioration of refrigerant oil etc.

Use a vacuum pump with a reverse flow check valve.

Vacuum pump oil may flow back into refrigerant cycle and that can cause deterioration of refrigerant oil etc.

Use the following tools specifically designed for use with R410A refrigerant.

The following tools are necessary to use R410A refrigerant.

Tools for R410A	
Gauge manifold	Flare tool
Charge hose	Size adjustment gauge
Gas leak detector	Vacuum pump adaptor
Torque wrench	Electronic refrigerant charging scale

Handle tools with care.

If dirt, dust or moisture enters into refrigerant cycle, that can cause deterioration of refrigerant oil or malfunction of compressor.

Do not use a charging cylinder.

If a charging cylinder is used, the composition of refrigerant will change and the efficiency will be lowered.

Ventilate the room if refrigerant leaks during operation. If refrigerant comes into contact with a flame, poisonous gases will be released.

[1] Cautions for service

(1) Perform service after recovering the refrigerant left in unit completely.
(2) Do not release refrigerant in the air.
(3) After completing service, charge the cycle with specified amount of refrigerant.
**(4) When performing service, install a filter drier simultaneously.
Be sure to use a filter drier for new refrigerant.**

[2] Additional refrigerant charge

When charging directly from cylinder

· Check that cylinder for R410A on the market is syphon type.
· Charging should be performed with the cylinder of syphon stood vertically. (Refrigerant is charged from liquid phase.)

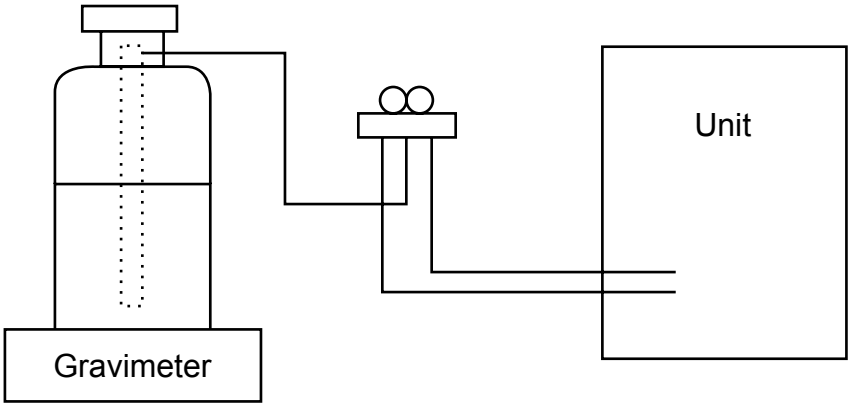

[3] Service tools

Use the below service tools as exclusive tools for R410A refrigerant.

No.	Tool name	Specifications
①	Gauge manifold	· Only for R410A
		· Use the existing fitting specifications. (UNF1/2)
		· Use high-tension side pressure of 5.3MPa·G or over.
②	Charge hose	· Only for R410A
		· Use pressure performance of 5.09MPa·G or over.
③	Electronic scale	——
④	Gas leak detector	· Use the detector for R134a, R407C or R410A.
⑤	Adaptor for reverse flow check	· Attach on vacuum pump.
⑥	Refrigerant charge base	——
⑦	Refrigerant cylinder	· Only for R410A · Top of cylinder (Pink) · Cylinder with syphon
⑧	Refrigerant recovery equipment	——

2 PART NAMES AND FUNCTIONS

• Indoor Unit

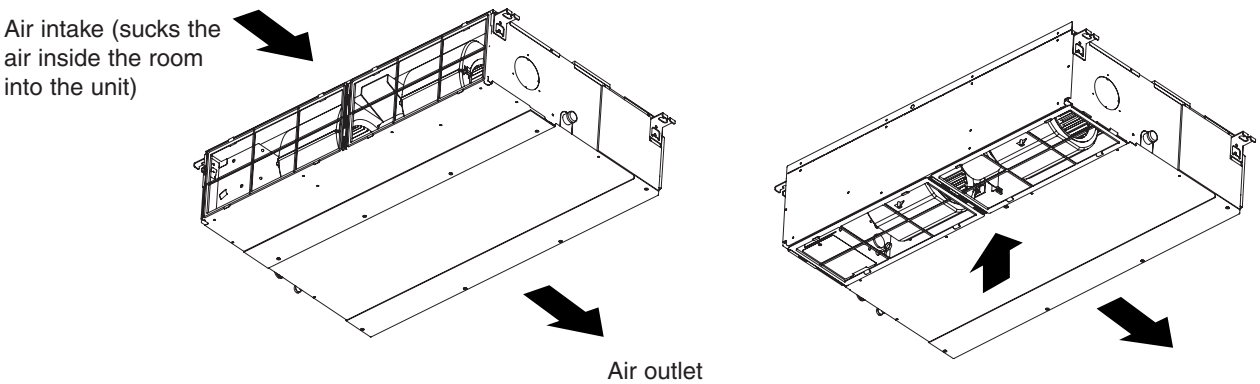

In case of rear inlet

In case of bottom inlet

3 SPECIFICATION

INDOOR UNIT	Service Ref.			**PEAD-A24AA5**
	Power supply (phase, cycle, voltage)			1 phase, 60Hz, 208/230V
		Max. Fuse Size	A	15
		Min. Circuit Ampacity	A	2.63
	External finish			Galvanized sheets
	Heat exchanger			Plate fin coil
	Fan	Fan (drive) × No.		Sirocco fan × 2
		Fan motor output	kW	0.121
		Fan motor	F.L.A	2.10
		Airflow (Low-Mid-High)	m³/min (CFM)	14.5-18.0-21.0 (512-636-742)
		External static pressure	Pa (in.WG)	35-50-70-100-150 (0.14-0.20-0.28-0.40-0.60)
	Operation control & Thermostat			Remote controller & built-in
	Sound pressure level (Low-Mid-High)	35Pa (0.14 in.WG)	dB (A)	30-32-36
		50Pa (0.20 in.WG)		30-33-37
		70Pa (0.28 in.WG)		30-34-38
		100Pa (0.40 in.WG)		31-36-39
		150Pa (0.60in.WG)		33-38-42
	Field drain pipe O.D		mm (in.)	32 (1-1/4)
	Dimensions	W	mm (in.)	1100 (43-5/16)
		D	mm (in.)	732 (28-7/8)
		H	mm (in.)	250 (9-7/8)
	Weight		kg (lbs)	31 (69)

INDOOR UNIT	Service Ref.			**PEAD-A30AA5**
	Power supply (phase, cycle, voltage)			1 phase, 60Hz, 208/230V
		Max. Fuse Size	A	15
		Min. Circuit Ampacity	A	2.73
	External finish			Galvanized sheets
	Heat exchanger			Plate fin coil
	Fan	Fan (drive) × No.		Sirocco fan × 2
		Fan motor output	kW	0.121
		Fan motor	F.L.A	2.18
		Airflow (Low-Mid-High)	m³/min (CFM)	17.5-21.0-25.0 (618-742-883)
		External static pressure	Pa (in.WG)	35-50-70-100-150 (0.14-0.20-0.28-0.40-0.60)
	Operation control & Thermostat			Remote controller & built-in
	Sound pressure level (Low-Mid-High)	35Pa (0.14 in.WG)	dB (A)	30-33-38
		50Pa (0.20 in.WG)		30-34-39
		70Pa (0.28 in.WG)		31-35-39
		100Pa (0.40 in.WG)		32-37-40
		150Pa (0.60in.WG)		34-39-43
	Field drain pipe O.D		mm (in.)	32 (1-1/4)
	Dimensions	W	mm (in.)	1100 (43-5/16)
		D	mm (in.)	732 (28-7/8)
		H	mm (in.)	250 (9-7/8)
	Weight		kg (lbs)	31 (69)

INDOOR UNIT	Service Ref.			**PEAD-A36AA5**
	Power supply (phase, cycle, voltage)			1 phase, 60Hz, 208/230V
		Max. Fuse Size	A	15
		Min. Circuit Ampacity	A	3.30
	External finish			Galvanized sheets
	Heat exchanger			Plate fin coil
	Fan	Fan (drive) × No.		Sirocco fan × 2
		Fan motor output	kW	0.244
		Fan motor	F.L.A	2.64
		Airflow (Low-Mid-High)	m³/min (CFM)	24.0-29.0-34.0 (847-1024-1201)
		External static pressure	Pa (in.WG)	35-50-70-100-150 (0.14-0.20-0.28-0.40-0.60)
	Operation control & Thermostat			Remote controller & built-in
	Sound pressure level (Low-Mid-High)	35Pa (0.14 in.WG)	dB (A)	32-38-42
		50Pa (0.20 in.WG)		33-38-42
		70Pa (0.28 in.WG)		34-39-43
		100Pa (0.40 in.WG)		36-40-44
		150Pa (0.60in.WG)		38-42-45
	Field drain pipe O.D		mm (in.)	32 (1-1/4)
	Dimensions	W	mm (in.)	1400 (55-1/8)
		D	mm (in.)	732 (28-7/8)
		H	mm (in.)	250 (9-7/8)
	Weight		kg (lbs)	39 (86)

INDOOR UNIT	Service Ref.			**PEAD-A42AA5**
	Power supply (phase, cycle, voltage)			1 phase, 60Hz, 208/230V
		Max. Fuse Size	A	15
		Min. Circuit Ampacity	A	3.50
	External finish			Galvanized sheets
	Heat exchanger			Plate fin coil
	Fan	Fan (drive) × No.		Sirocco fan × 2
		Fan motor output	kW	0.244
		Fan motor	F.L.A	2.80
		Airflow (Low-Mid-High)	m^3/min (CFM)	29.5-35.5-42.0 (1042-4254-1483)
		External static pressure	Pa (in.WG)	35-50-70-100-150 (0.14-0.20-0.28-0.40-0.60)
	Operation control & Thermostat			Remote controller & built-in
	Sound pressure level (Low-Mid-High)	35Pa (0.14 in.WG)	dB (A)	36-40-44
		50Pa (0.20 in.WG)		36-40-44
		70Pa (0.28 in.WG)		36-41-45
		100Pa (0.40 in.WG)		37-43-46
		150Pa (0.60in.WG)		39-44-47
	Field drain pipe O.D		mm (in.)	32 (1-1/4)
	Dimensions	W	mm (in.)	1400 (55-1/8)
		D	mm (in.)	732 (28-7/8)
		H	mm (in.)	250 (9-7/8)
	Weight		kg (lbs)	41 (91)

4 FAN PERFORMANCE AND CORRECTED AIR FLOW

PEAD-A24AA5
(External static pressure 35Pa) 208-230V 60Hz

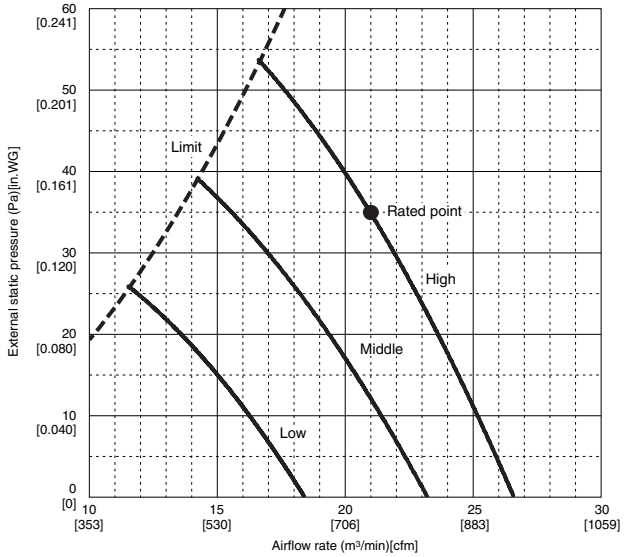

PEAD-A24AA5
(External static pressure 100Pa) 208-230V 60Hz

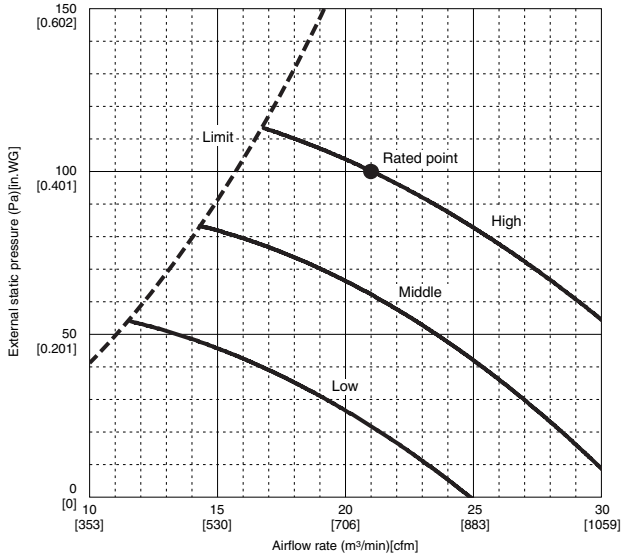

PEAD-A24AA5
(External static pressure 50Pa) 208-230V 60Hz

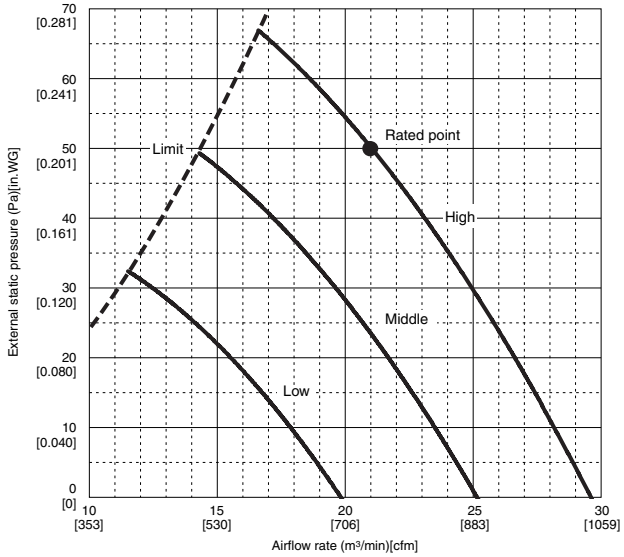

PEAD-A24AA5
(External static pressure 150Pa) 208-230V 60Hz

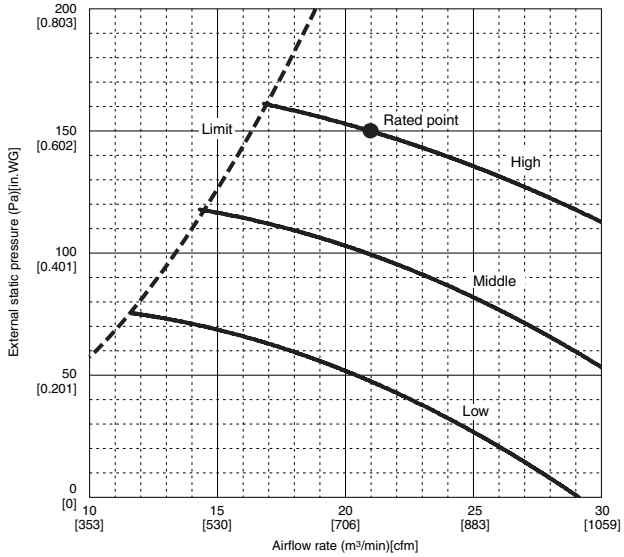

PEAD-A24AA5
(External static pressure 70Pa) 208-230V 60Hz

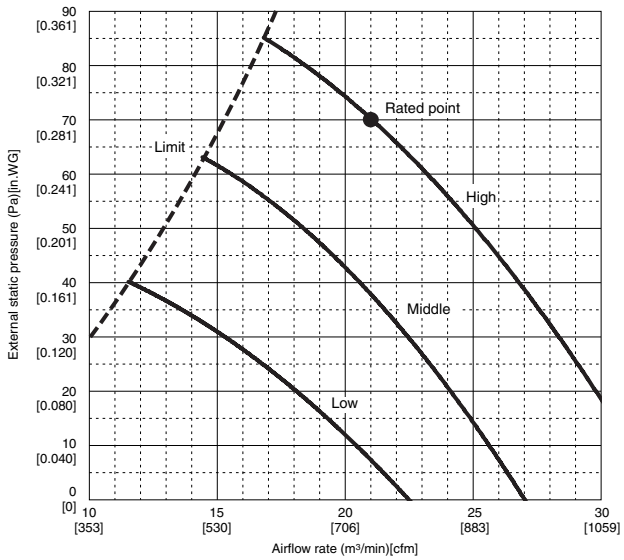

PEAD-A30AA5
(External static pressure 35Pa) 208-230V 60Hz

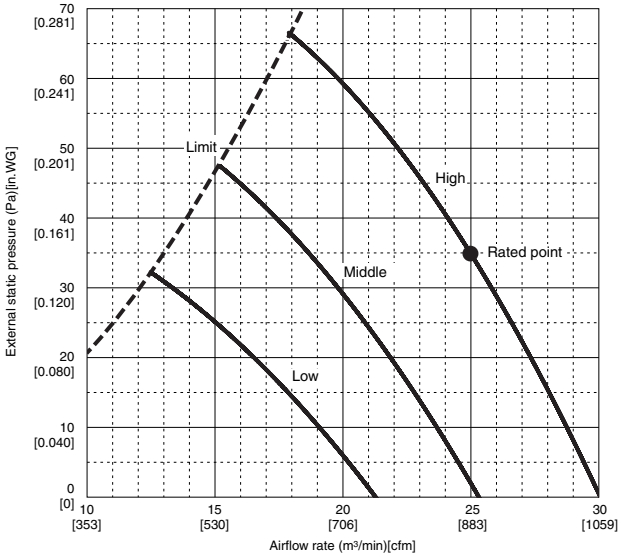

PEAD-A30AA5
(External static pressure 100Pa) 208-230V 60Hz

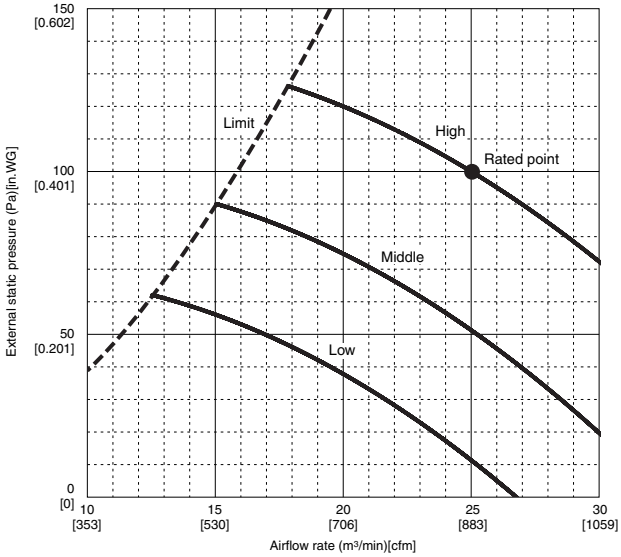

PEAD-A30AA5
(External static pressure 50Pa) 208-230V 60Hz

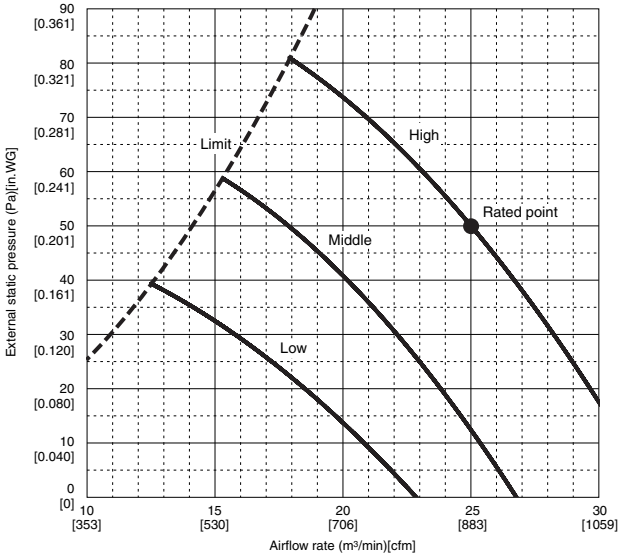

PEAD-A30AA5
(External static pressure 150Pa) 208-230V 60Hz

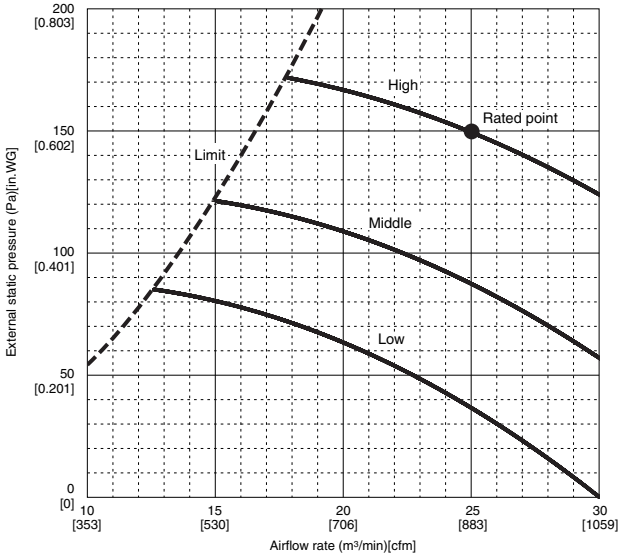

PEAD-A30AA5
(External static pressure 70Pa) 208-230V 60Hz

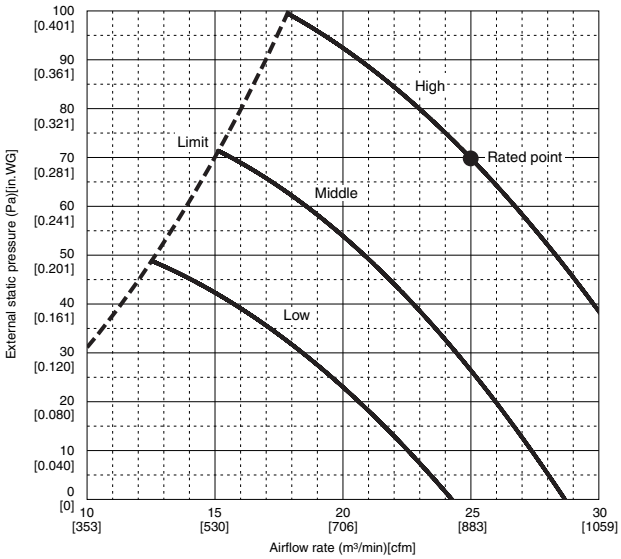

PEAD-A36AA5
(External static pressure 35Pa) 208-230V 60Hz

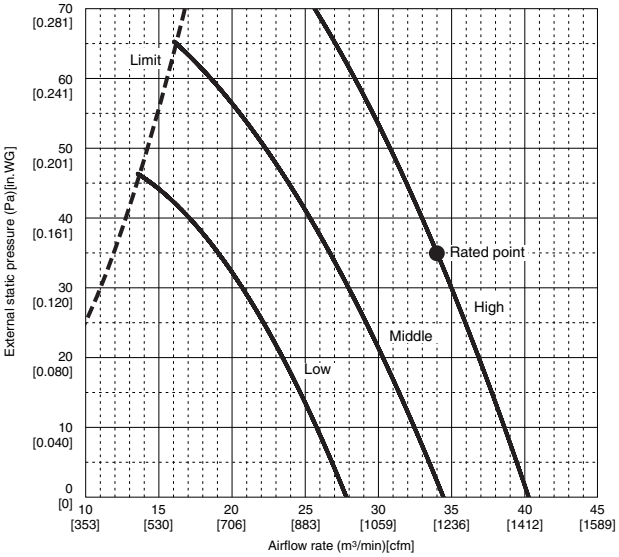

PEAD-A36AA5
(External static pressure 100Pa) 208-230V 60Hz

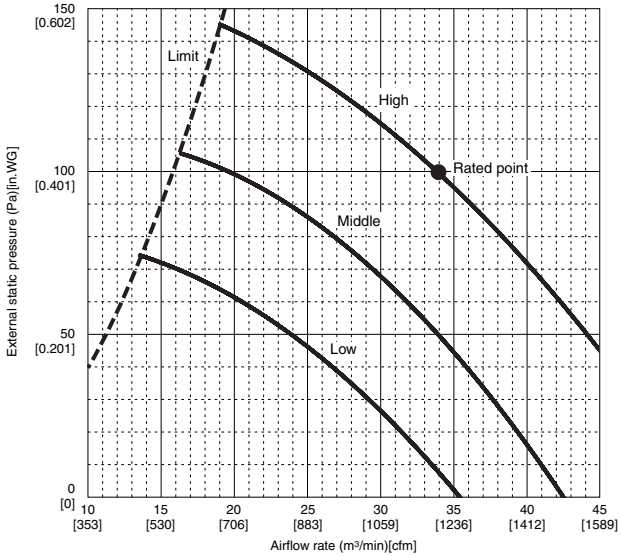

PEAD-A36AA5
(External static pressure 50Pa) 208-230V 60Hz

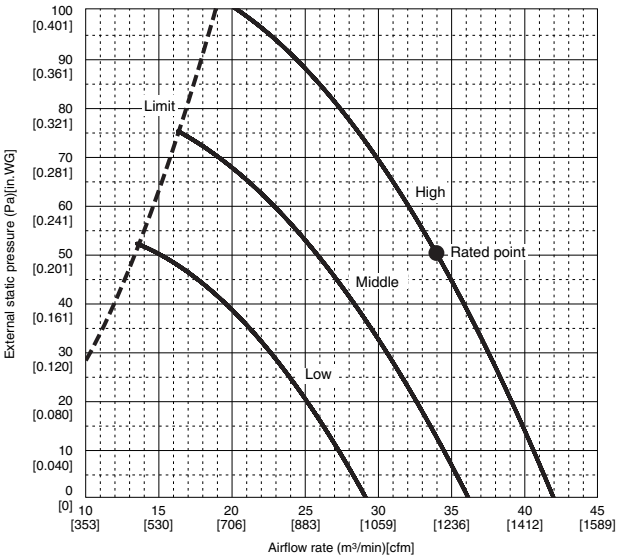

PEAD-A36AA5
(External static pressure 150Pa) 208-230V 60Hz

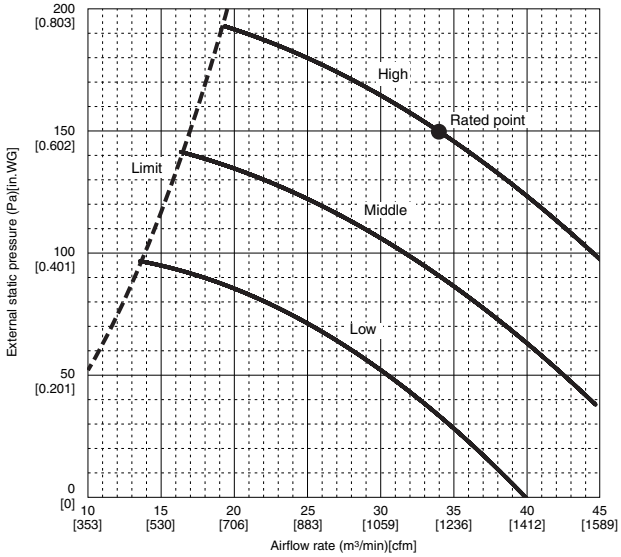

PEAD-A36AA5
(External static pressure 70Pa) 208-230V 60Hz

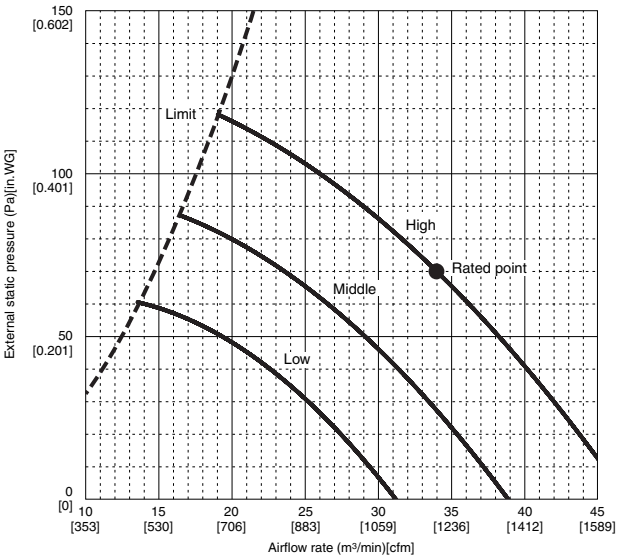

PEAD-A42AA5
(External static pressure 35Pa) 208-230V 60Hz

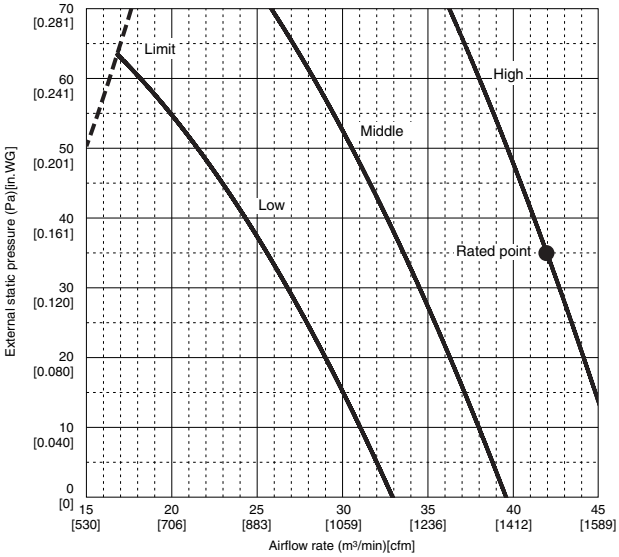

PEAD-A42AA5
(External static pressure 100Pa) 208-230V 60Hz

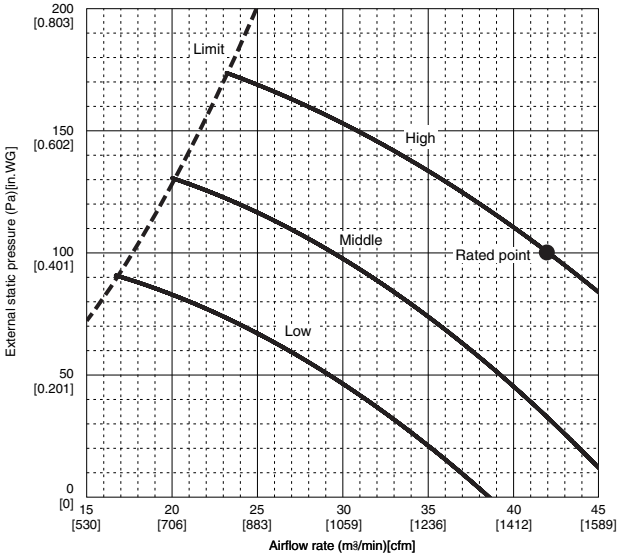

PEAD-A42AA5
(External static pressure 50Pa) 208-230V 60Hz

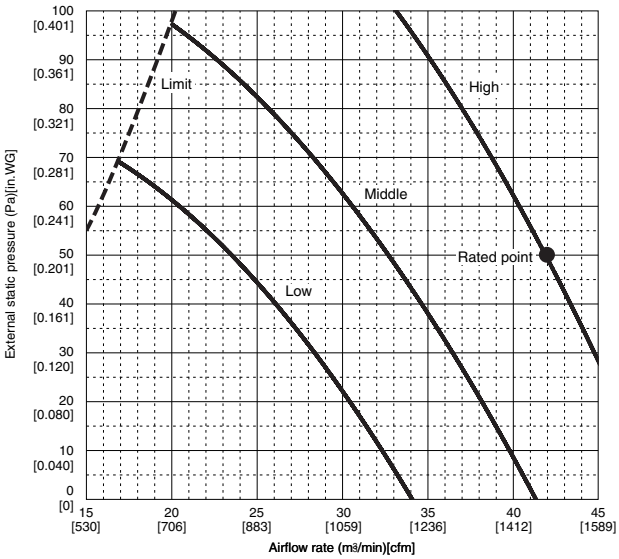

PEAD-A42AA5
(External static pressure 150Pa) 208-230V 60Hz

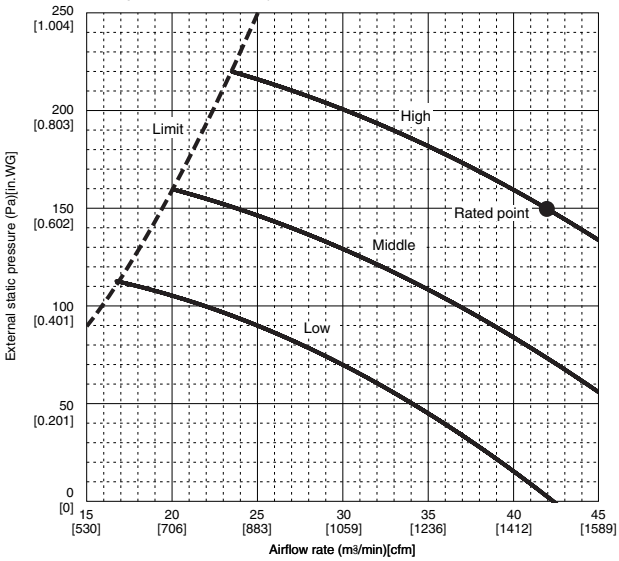

PEAD-A42AA5
(External static pressure 70Pa) 208-230V 60Hz

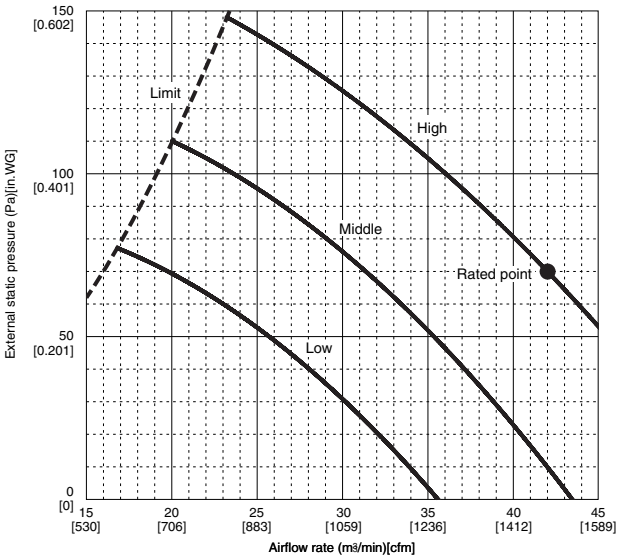

PEAD-A24, 30, 36,42AA5

Air filter 208-230V 60Hz

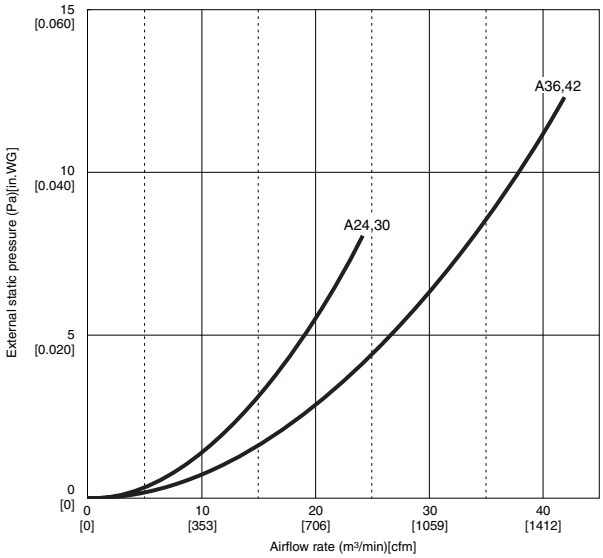

5 SOUND PRESSURE LEVELS

5-1. Sound pressure level

Ceiling concealed

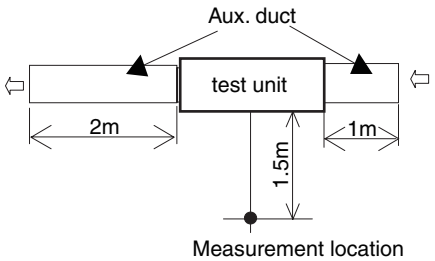

5-2. NC curves

PEAD-A24AA5

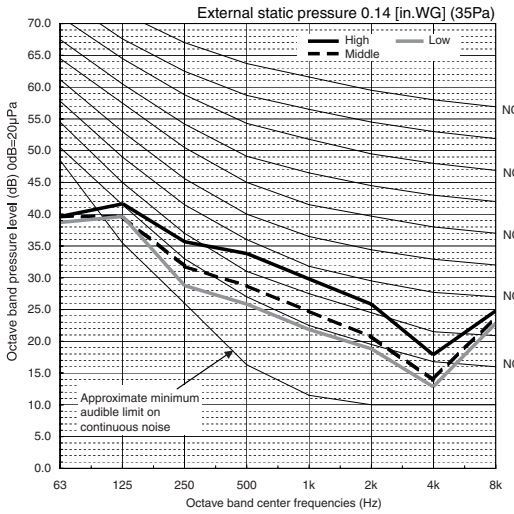

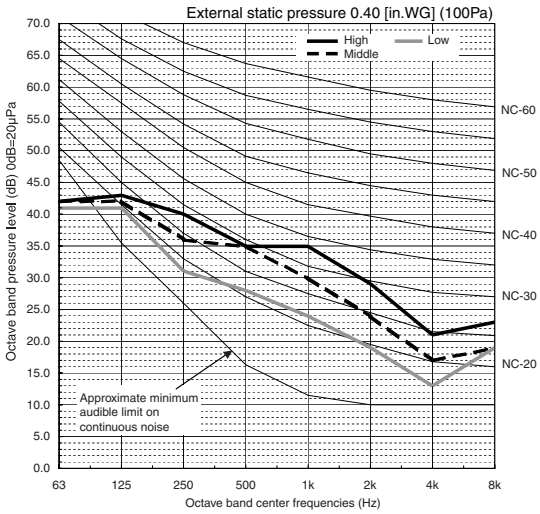

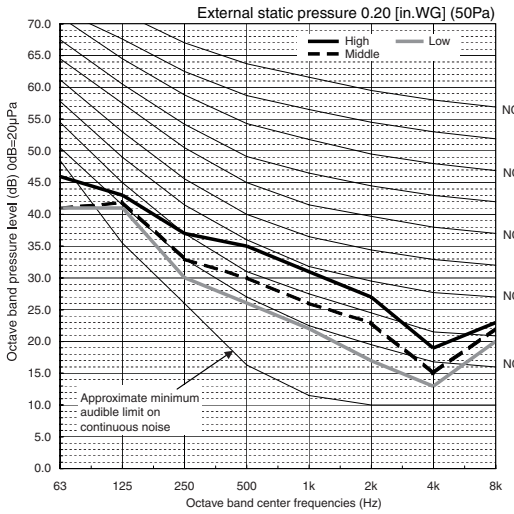

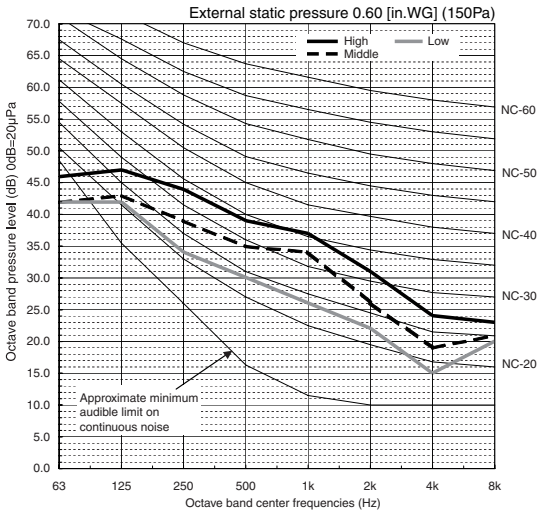

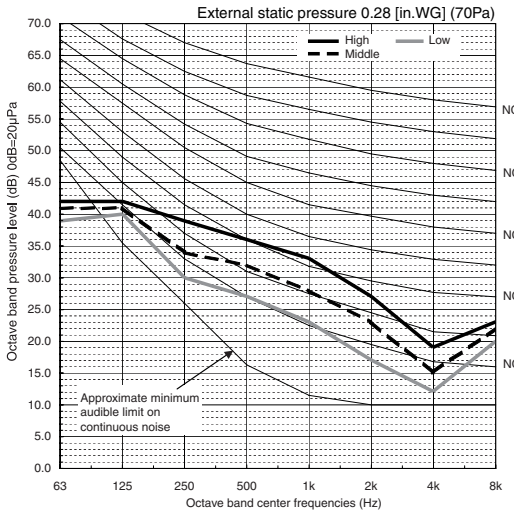

PEAD-A30AA5

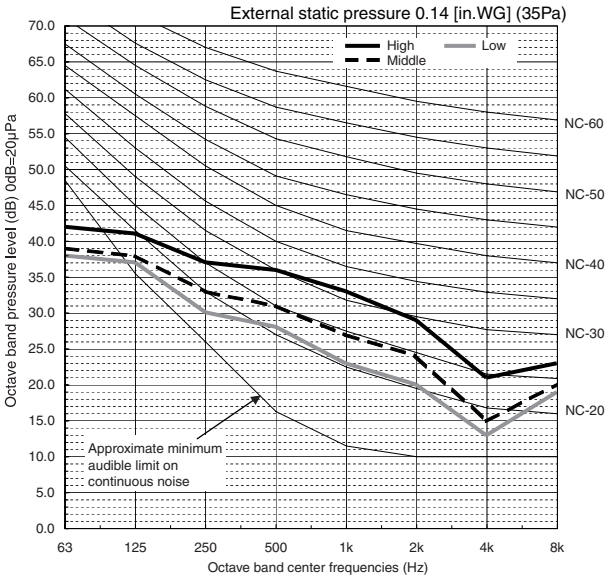
External static pressure 0.14 [in.WG] (35Pa)
High
Low
Middle
NC-60
NC-50
NC-40
NC-30
NC-20
Approximate minimum audible limit on continuous noise
Octave band pressure level (dB) 0dB=20μPa
Octave band center frequencies (Hz)
63
125
250
500
1k
2k
4k
8k

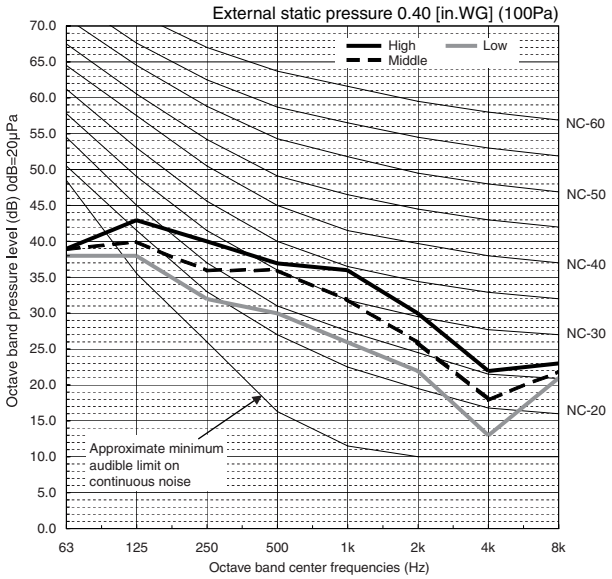
External static pressure 0.40 [in.WG] (100Pa)
High
Low
Middle
NC-60
NC-50
NC-40
NC-30
NC-20
Approximate minimum audible limit on continuous noise
Octave band pressure level (dB) 0dB=20μPa
Octave band center frequencies (Hz)
63
125
250
500
1k
2k
4k
8k

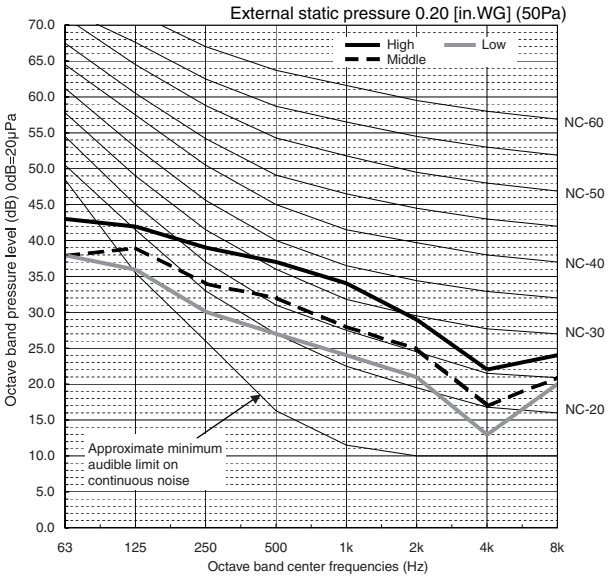
External static pressure 0.20 [in.WG] (50Pa)
High
Low
Middle
NC-60
NC-50
NC-40
NC-30
NC-20
Approximate minimum audible limit on continuous noise
Octave band pressure level (dB) 0dB=20μPa
Octave band center frequencies (Hz)
63
125
250
500
1k
2k
4k
8k

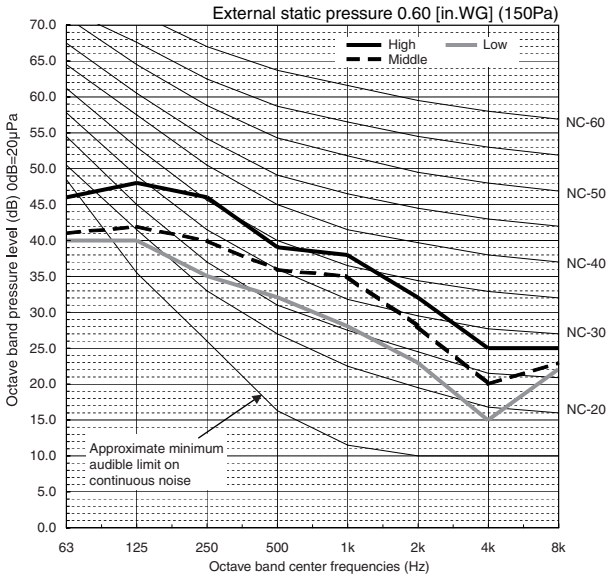
External static pressure 0.60 [in.WG] (150Pa)
High
Low
Middle
NC-60
NC-50
NC-40
NC-30
NC-20
Approximate minimum audible limit on continuous noise
Octave band pressure level (dB) 0dB=20μPa
Octave band center frequencies (Hz)
63
125
250
500
1k
2k
4k
8k

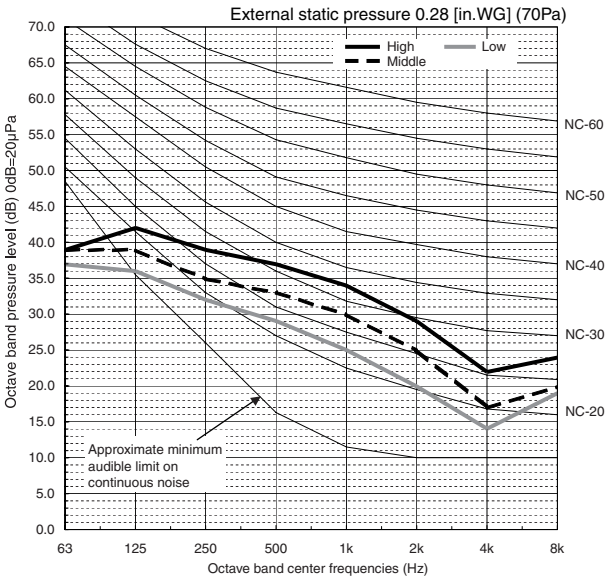
External static pressure 0.28 [in.WG] (70Pa)
High
Low
Middle
NC-60
NC-50
NC-40
NC-30
NC-20
Approximate minimum audible limit on continuous noise
Octave band pressure level (dB) 0dB=20μPa
Octave band center frequencies (Hz)
63
125
250
500
1k
2k
4k
8k

PEAD-A36AA5

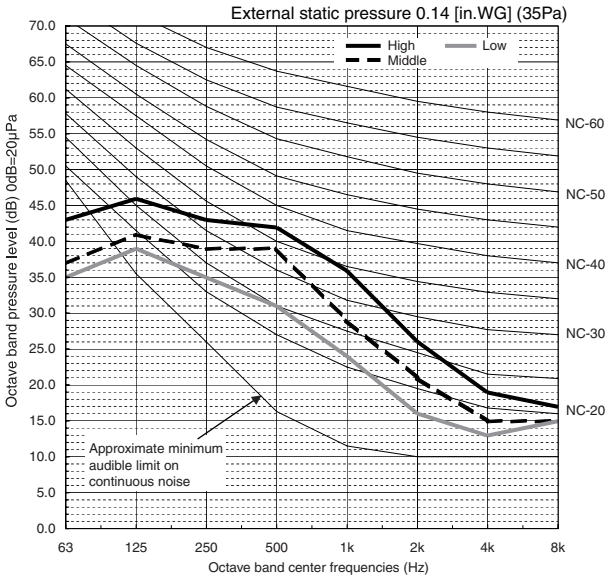
External static pressure 0.14 [in.WG] (35Pa)
High
Low
Middle
NC-60
NC-50
NC-40
NC-30
NC-20
Approximate minimum audible limit on continuous noise
Octave band pressure level (dB) 0dB=20μPa
Octave band center frequencies (Hz)
63
125
250
500
1k
2k
4k
8k

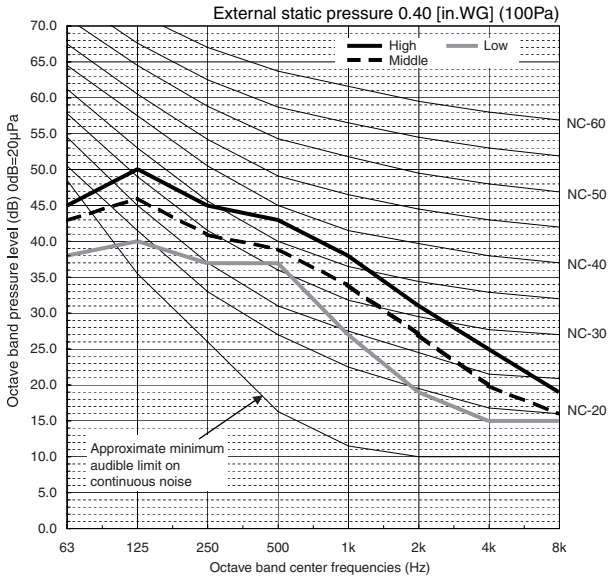
External static pressure 0.40 [in.WG] (100Pa)
High
Low
Middle
NC-60
NC-50
NC-40
NC-30
NC-20
Approximate minimum audible limit on continuous noise
Octave band pressure level (dB) 0dB=20μPa
Octave band center frequencies (Hz)
63
125
250
500
1k
2k
4k
8k

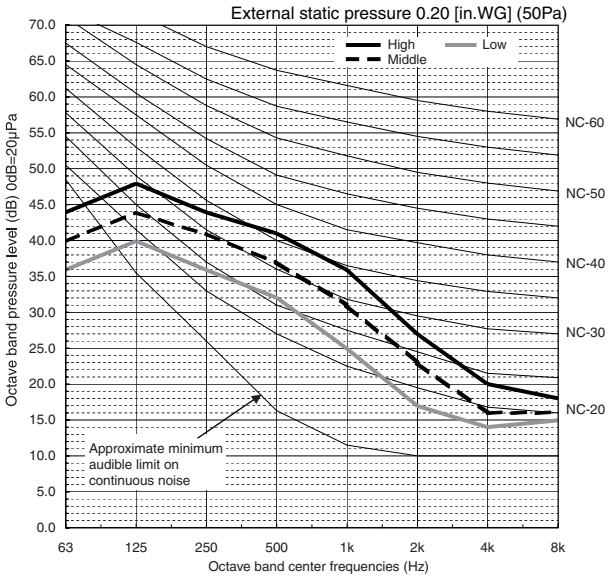
External static pressure 0.20 [in.WG] (50Pa)
High
Low
Middle
NC-60
NC-50
NC-40
NC-30
NC-20
Approximate minimum audible limit on continuous noise
Octave band pressure level (dB) 0dB=20μPa
Octave band center frequencies (Hz)
63
125
250
500
1k
2k
4k
8k

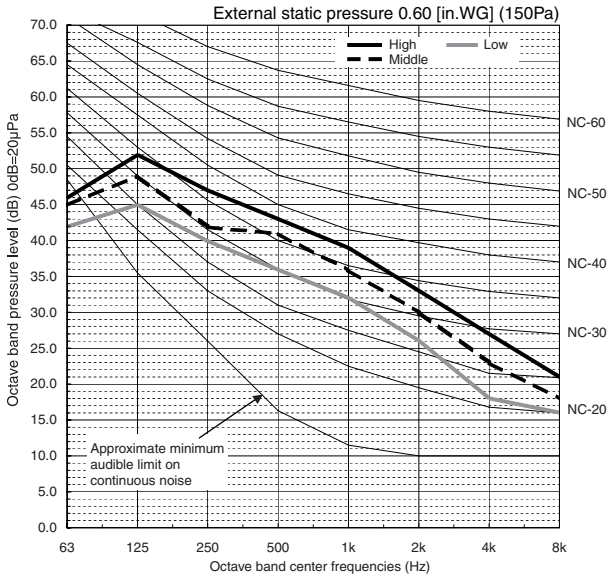
External static pressure 0.60 [in.WG] (150Pa)
High
Low
Middle
NC-60
NC-50
NC-40
NC-30
NC-20
Approximate minimum audible limit on continuous noise
Octave band pressure level (dB) 0dB=20μPa
Octave band center frequencies (Hz)
63
125
250
500
1k
2k
4k
8k

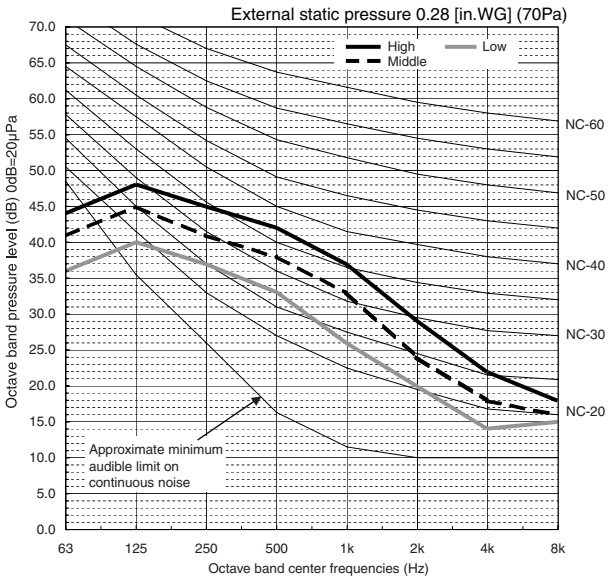
External static pressure 0.28 [in.WG] (70Pa)
High
Low
Middle
NC-60
NC-50
NC-40
NC-30
NC-20
Approximate minimum audible limit on continuous noise
Octave band pressure level (dB) 0dB=20μPa
Octave band center frequencies (Hz)
63
125
250
500
1k
2k
4k
8k

PEAD-A42AA5

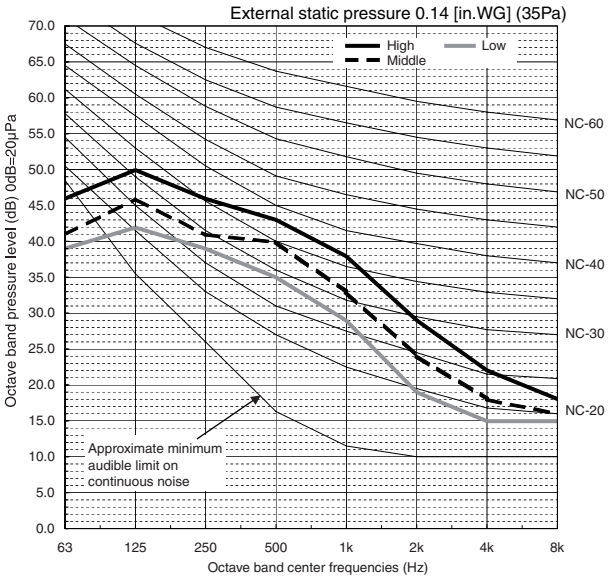
External static pressure 0.14 [in.WG] (35Pa)
High
Low
Middle
NC-60
NC-50
NC-40
NC-30
NC-20
Approximate minimum audible limit on continuous noise
Octave band pressure level (dB) 0dB=20μPa
Octave band center frequencies (Hz)
63
125
250
500
1k
2k
4k
8k

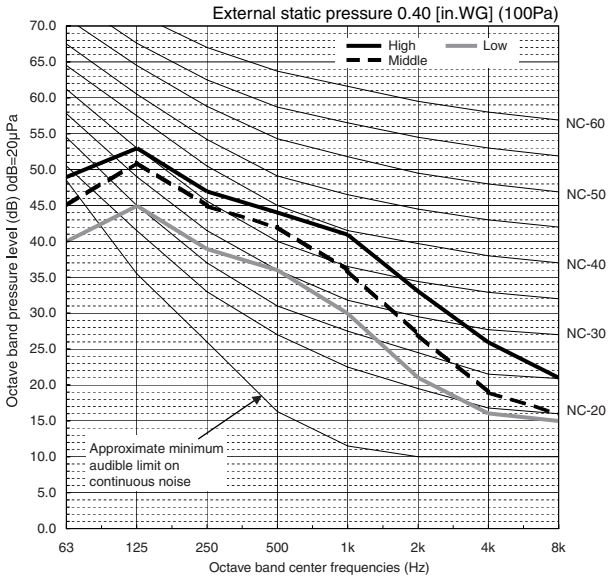
External static pressure 0.40 [in.WG] (100Pa)
High
Low
Middle
NC-60
NC-50
NC-40
NC-30
NC-20
Approximate minimum audible limit on continuous noise
Octave band pressure level (dB) 0dB=20μPa
Octave band center frequencies (Hz)

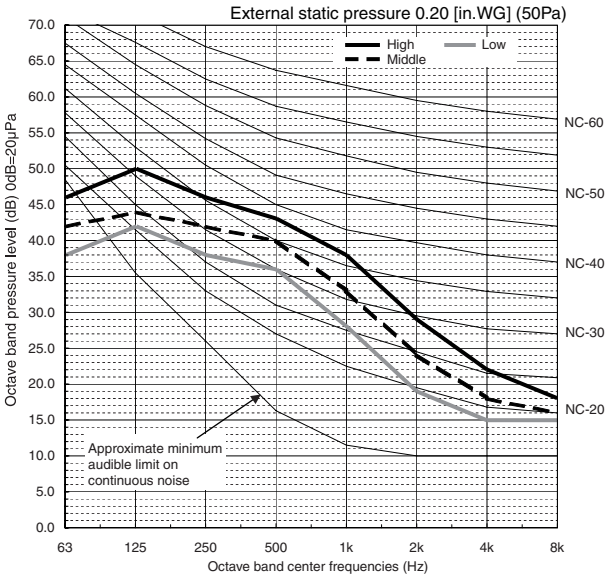
External static pressure 0.20 [in.WG] (50Pa)
High
Low
Middle
NC-60
NC-50
NC-40
NC-30
NC-20
Approximate minimum audible limit on continuous noise
Octave band pressure level (dB) 0dB=20μPa
Octave band center frequencies (Hz)

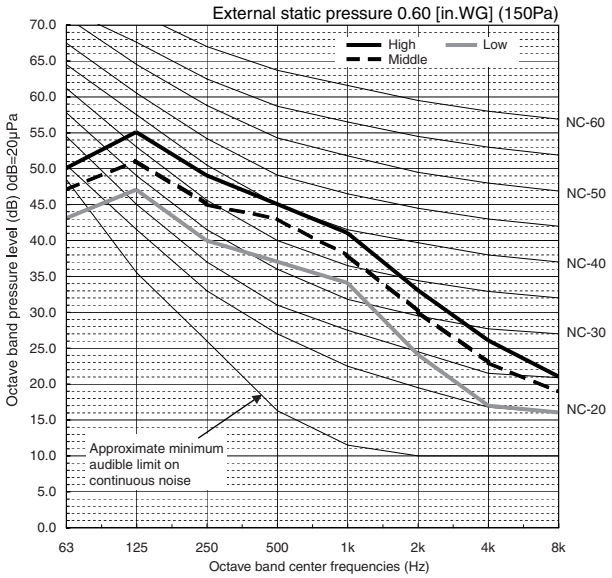
External static pressure 0.60 [in.WG] (150Pa)
High
Low
Middle
NC-60
NC-50
NC-40
NC-30
NC-20
Approximate minimum audible limit on continuous noise
Octave band pressure level (dB) 0dB=20μPa
Octave band center frequencies (Hz)

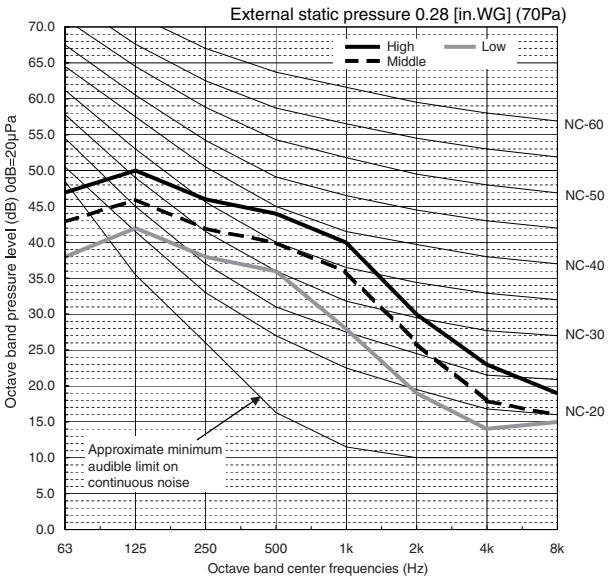
External static pressure 0.28 [in.WG] (70Pa)
High
Low
Middle
NC-60
NC-50
NC-40
NC-30
NC-20
Approximate minimum audible limit on continuous noise
Octave band pressure level (dB) 0dB=20μPa
Octave band center frequencies (Hz)

6 OUTLINES & DIMENSIONS

INDOOR UNIT

PEAD-A24, 30, 36, 42AA5

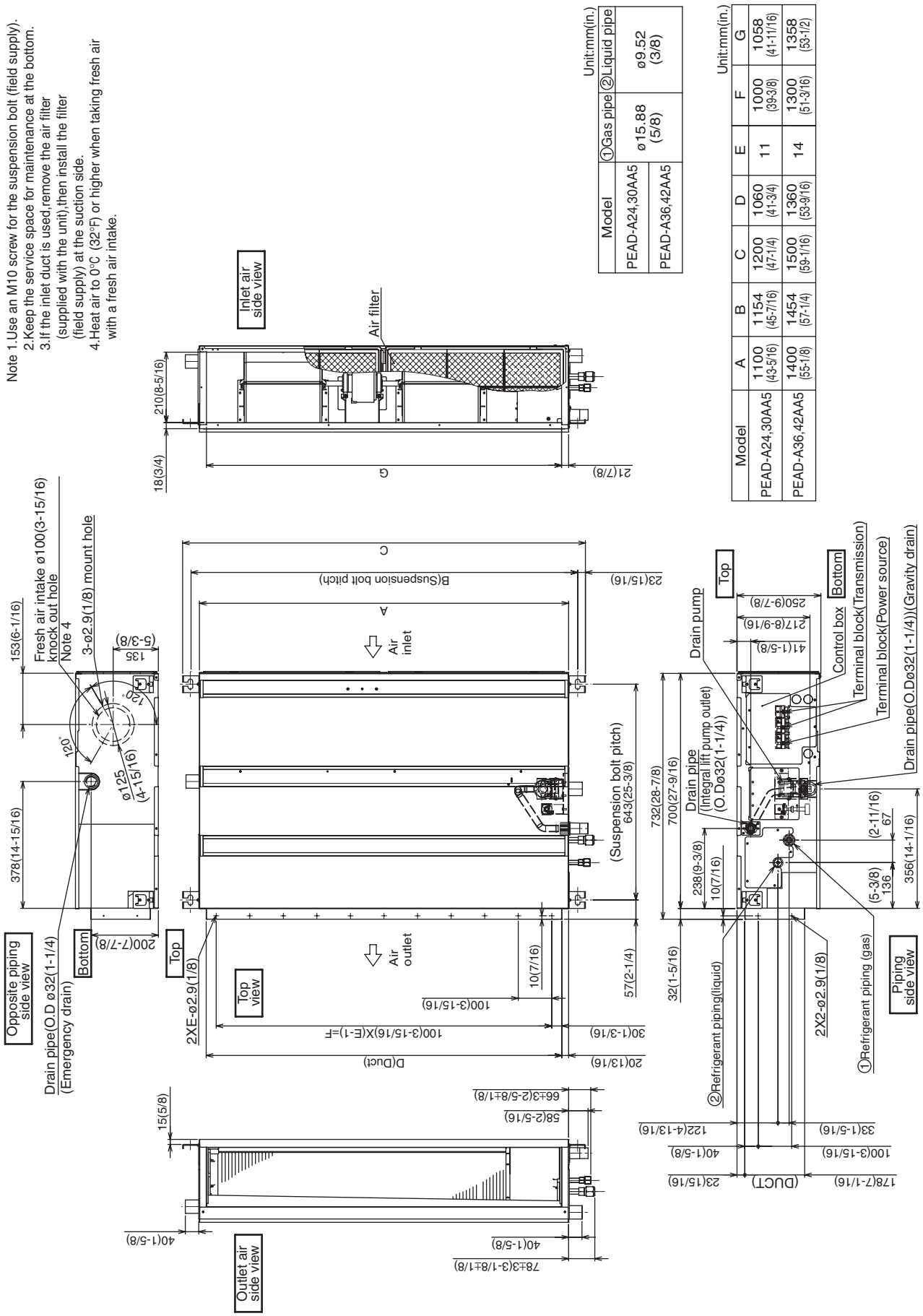

[Maintenance access space]

Secure enough access space to allow for the maintenance, inspection, and replacement of the motor, fan, drain pump, heat exchanger, and electric box in one of the following ways.

Select an installation site for the indoor unit so that it's maintenance access space will not be obstructed by beams or other objects.

(1)When a space of 300mm or more is available below the unit between the unit and the ceiling. (Fig.1)

- Create access door 1 and 2 (450x450mm each) as shown in Fig.2.
  (Access door 2 is not required if enough space is available below the unit for a maintenance worker to work in.)

(2)When a space of less than 300mm is available below the unit between the unit and the ceiling.
(At least 20mm of space should be left below the unit as shown in Fig.3.)

- Create access door 1 diagonally below the electric box and access door 3 below the unit as shown in Fig.4.
  or
- Create access door 4 below the electric box and the unit as shown in Fig.5.

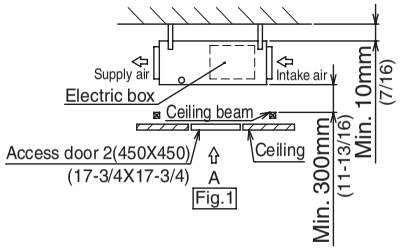

Fig.1

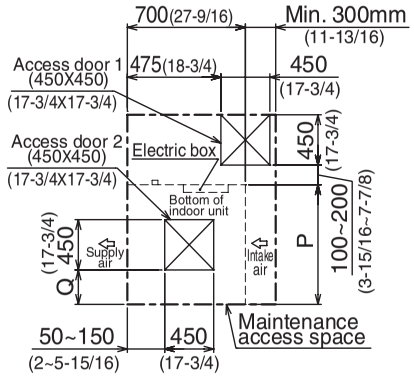

Fig.2 (Viewed from the direction of the arrow A)

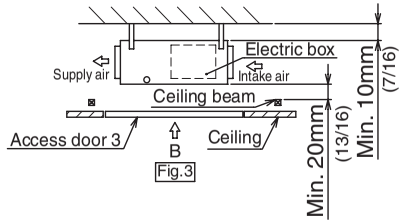

Fig.3

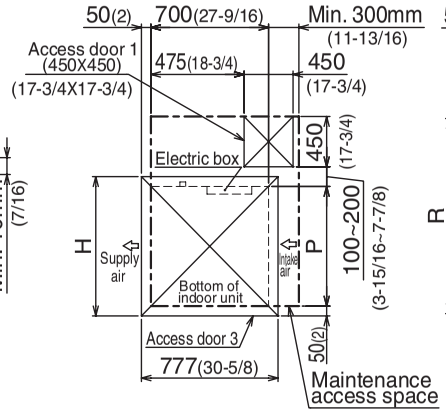

Fig.4 (Viewed from the direction of the arrow B)

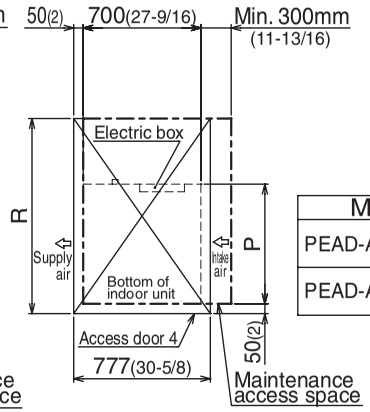

Fig.5 (Viewed from the direction of the arrow B)

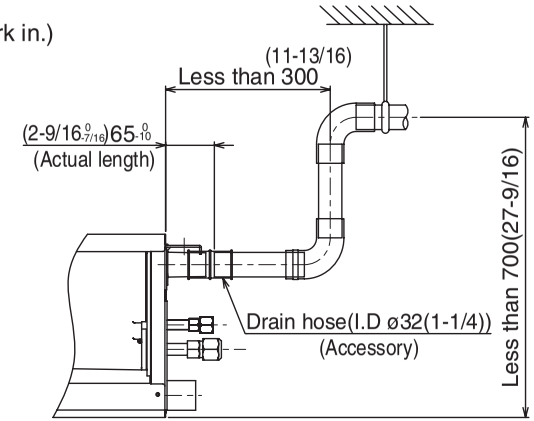

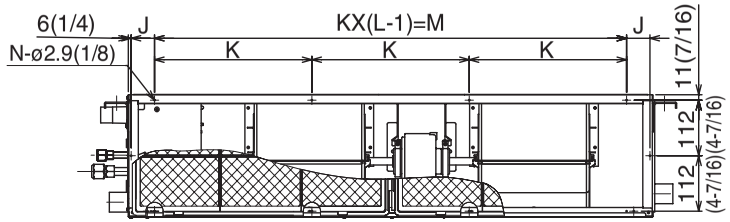

Unit:mm(in.)

Model	H	J	K	L	M	N	P	Q	R
PEAD-A24,30AA5	1200 (47-1/4)	49 (1-15/16)	330 (13)	4	990 (39)	10	1100 (43-5/16)	250~350 (9-7/8)~(13-13/16)	1700 (66-15/16)
PEAD-A36,48AA5	1500 (59-1/16)	54 (2-3/16)	320 (12-5/8)	5	1280 (50-7/16)	12	1400 (55-1/8)	400~500 (15-3/4)~(19-11/16)	2000 (78-3/4)

7 WIRING DIAGRAM

PEAD-A24, 30, 36, 42AA5

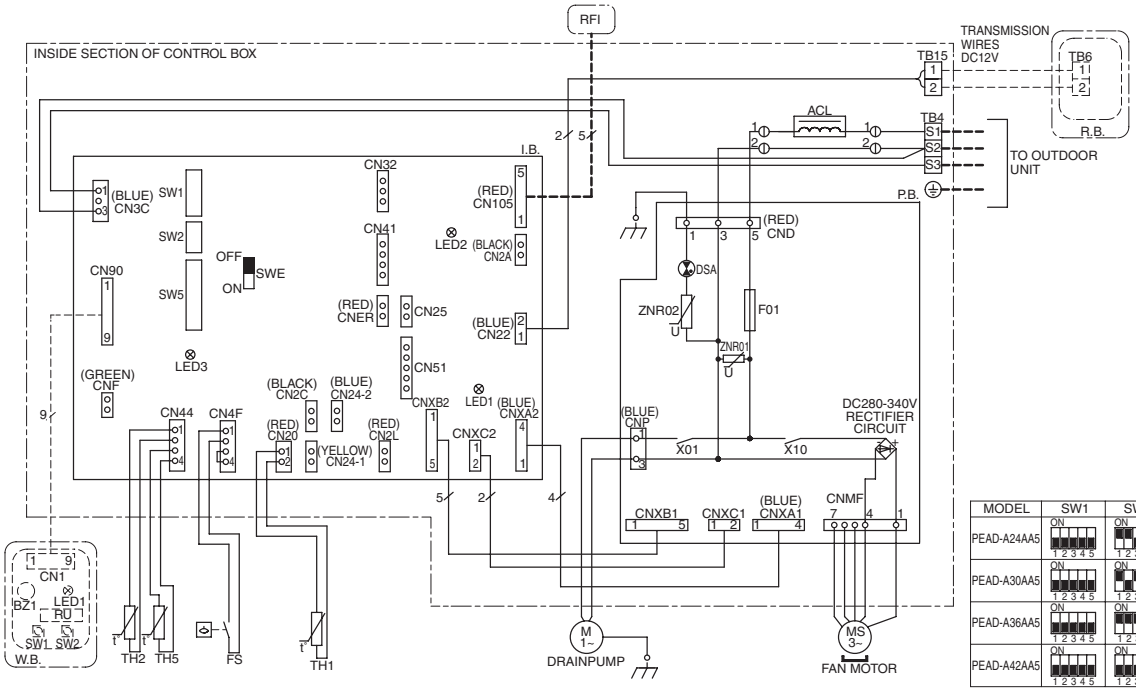

MODEL	SW1	SW2	SW5
PEAD-A24AA5	ON 1 2 3 4 5	ON 1 2 3 4 5	ON 1 2 3 4 5 6 7 8
PEAD-A30AA5	ON 1 2 3 4 5	ON 1 2 3 4 5	ON 1 2 3 4 5 6 7 8
PEAD-A36AA5	ON 1 2 3 4 5	ON 1 2 3 4 5	ON 1 2 3 4 5 6 7 8
PEAD-A42AA5	ON 1 2 3 4 5	ON 1 2 3 4 5	ON 1 2 3 4 5 6 7 8

The black square(■) indicates a switch position.

SYMBOL EXPLANATION

SYMBOL	NAME
I.B.	INDOOR CONTROLLER BOARD
CN24-1	CONNECTOR (HEATER CONTROL 1ST)
CN24-2	CONNECTOR (HEATER CONTROL 2ND)
CN25	CONNECTOR (HUMIDITY OUTPUT)
CN2A	CONNECTOR (0-10V ANALOG INPUT)
CN2C	CONNECTOR (ERV OUTPUT)
CN2L	CONNECTOR (LOSSNAY)
CN32	CONNECTOR (REMOTE SWITCH)
CN41	CONNECTOR (HA TERMINAL-A)
CN51	CONNECTOR (CENTRALLY CONTROL)
CN90	CONNECTOR (WIRELESS)
CN105	CONNECTOR (RADIOFREQUENCY INTERFACE)
LED1	LED (POWER SUPPLY)
LED2	LED (REMOTE CONTROLLER SUPPLY)
LED3	LED (TRANSMISSION INDDOR-OUTDOOR)
CNER	CONNECTOR (ERV INPUT)
CNF	CONNECTOR (HUMIDITY INPUT)

SYMBOL	NAME
I.B.	INDOOR CONTROLLER BOARD
SW1	SWITCH (FOR MODEL SELECTION)
SW2	SWITCH (FOR CAPACITY CODE)
SW5	SWITCH (FOR MODE SELECTION)
SWE	CONNECTOR (EMERGENCY OPERATION)
P.B.	POWER SUPPLY BOARD
F01	FUSE AC250V 6.3A
ZNR01,02	VARISTOR
DSA	ARRESTOR
X01	AUX. RELAY
X10	AUX. RELAY
TH1	INTAKE AIR TEMP.THERMISTOR
TH2	PIPE TEMP.THERMISTOR/LIQUID
TH5	COND./EVA.TEMP.THERMISTOR
ACL	AC REACTOR (POWER FACTOR IMPROVEMENT)
FS	FLOAT SWITCH
RFI	RADIO FREQUENCY INTERFACE FOR RF THERMOSTAT

SYMBOL	NAME
TB4	TERMINAL BLOCK (INDOOR/OUTDOOR CONNECTING LINE)
TB5	TERMINAL BLOCK (REMOTE CONTROLLER TRANSMISSION LINE)
OPTIONAL PARTS	
W.B.	IR WIRELESS REMOTE CONTROLLER BOARD
RU	RECEIVING UNIT
BZ1	BUZZER
LED1	LED (RUN INDICATOR)
SW1	SWITCH (HEATING ON/OFF)
SW2	SWITCH (COOLING ON/OFF)
R.B.	WIRED REMOTE CONTROLLER BOARD
TB6	TERMINAL BLOCK (REMOTE CONTROLLER TRANSMISSION LINE)

Note1.Since the outdoor side electric wiring may change be sure to check the outdoor unit electric wiring for servicing.
2.Indoor and outdoor connecting wires are made with pola rities, make wiring matching terminal numbers (S1,S2,S3).
3.Symbols used in wiring diagram above are as follows.
:CONNECTOR
:TERMINAL
(HEAVY DOTTED LINE):FIELD WIRING
(THIN DOTTED LINE):OPTIONAL PARTS
4.Use copper supply wire.

8 REFRIGERANT SYSTEM DIAGRAM

PEAD-A24, 30, 36, 42AA5

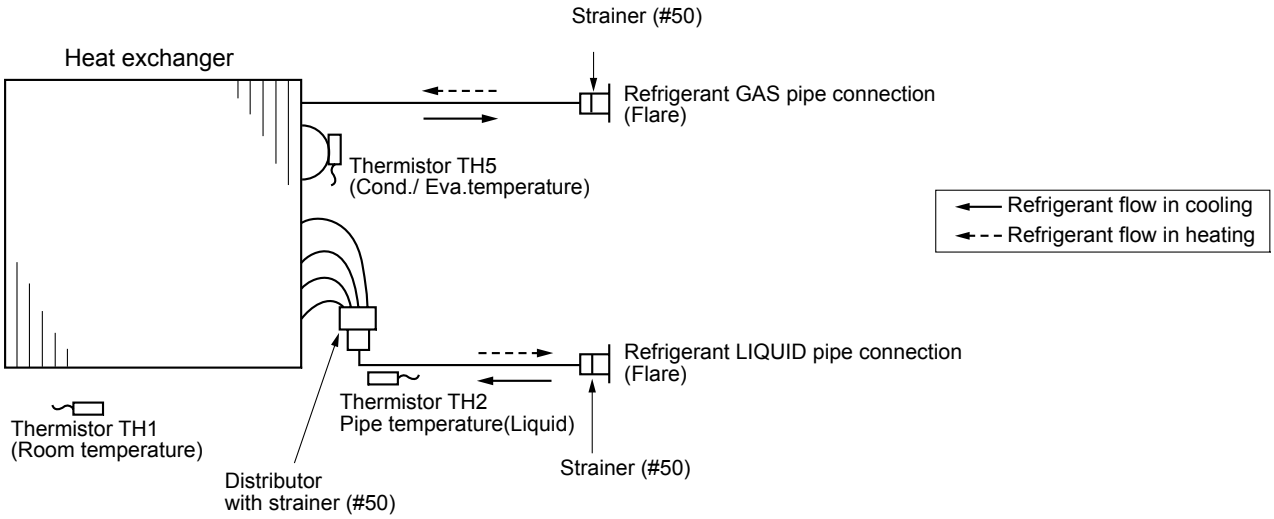

9 HEATER CONTROL

9-1. CONTROL SPECIFICATIONS AND FUNCTION SETTING

- Table 1 shows how the field-installed heater is controlled. Select the desired pattern in the table below, and set the Function on the indoor units as shown in Table 1.

Table.1 [Function table]
Select unit numbers 01 to 03 or all units (AL [wired remote controller] / 07 [IR wireless remote controller])

Mode	Setting		Mode No. 23	Mode No. 11	Initial setting
Heater control	1st 2nd	Heater OFF Inlet air temp.≥ set temp. Heater ON Inlet air temp.< set temp. -4.5°F(2.5°C) · The fan will stop ant the heater will turn off when [DEFROST] or [ERROR] is displayed. 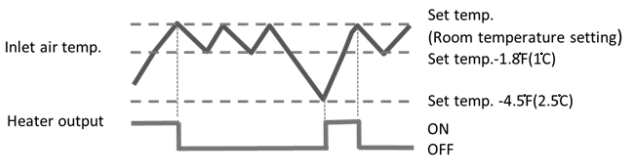	1	-	○
	1st	Heater OFF Inlet air temp. ≥ set temp. Heater ON Inlet air temp.< set temp. -1.8°F(1°C) · The fan will drive ant the heater will turn on when [DEFROST] or [ERROR] is displayed. 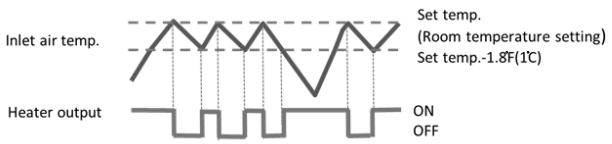	2	1	-
	2nd	Heater OFF Inlet air temp. ≥set temp. Heater ON Inlet air temp.< set temp. -2.7°F(1.5°C) · The fan will drive ant the heater will turn on when [DEFROST] or [ERROR] is displayed. 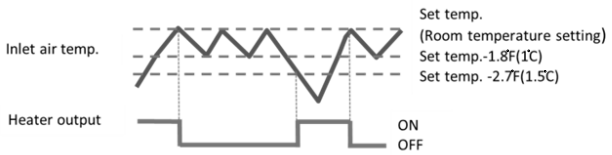			
	1st	Heater OFF Inlet air temp. ≥ set temp.-1.8°F(1°C) Heater ON Inlet air temp.< set temp. -3.6°F(2°C) · The fan will drive ant the heater will turn on when [DEFROST] or [ERROR] is displayed. 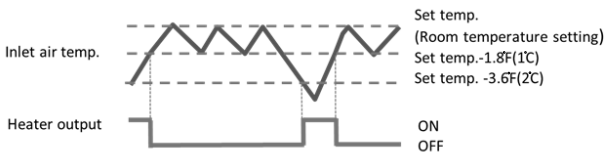	2	2	-
	2nd	Inlet air temp.≥ set temp.-1.8°F(1°C) Heater ON Inlet air temp.< set temp. -4.5°F(2.5°C) · The fan will drive ant the heater will turn on when [DEFROST] or [ERROR] is displayed. 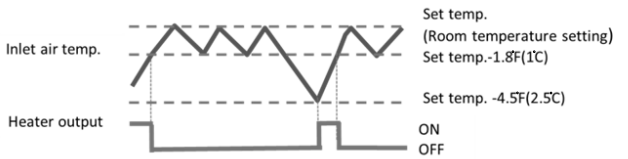			

1st: Heater output from CN24-1(yellow) on the indoor unit control board
2nd: Heater output from CN24-2(blue) on the indoor unit control board
*Refer to the Installation Manual for function settings

9-2. FAN CONTROL

By setting the Mode No. 23 in the Function Table in section 9-1 to 2 and using CN4Y on the optional parts PAC-YU25HT, the following patterns of fan control will become possible when [DEFROST] or [ERROR] is displayed.

Fan control patterns when [DEFROST] or [ERROR] is displayed

	Heater is installed in the duct.	No heater is installed in the duct.
Use of CN4Y (PAC-YU25HT)	Unused*	Used
Heater is off.	Fan ON*1	Fan OFF
Heater is on.	Fan ON*1	Fan OFF

While the heater is on, the fan will operate at high speed regardless of the fan setting on the remote controller, except when the unit is operated in the DEFROST mode or when the unit is in error.

*** If a heater is installed in the duct, do not use CN4Y. By doing so, the fan will turn off when the heater is on, which may result in fire.**

*1 Fan speed setting

Mode	Setting		Mode no.	Setting	Initial setting
	Heating Thermo-OFF	[DEFROST] or [ERROR]			
Fan control	Very low	Very low	25	1	○
	STOP	Remote controller setting	25	2	-
	Remote controller setting	Remote controller setting	25	3	-

*Refer to the Installation Manual for function settings.

9-3. PAC-YU25HT (OPTIONAL PARTS) INSTALLATION

The following section describes installation of the External Heater Adapter that connects to PEAD-A·AA5 series indoor unit. This products is the special wiring parts to drive an electric heater with the air conditioner.

(1) Parts list

♦Check that the following parts are included in the package.

1) External output cable (with a yellow connector).....2 in total
Two types of cables with different connectors are included.

2) Panel heater connector..... 3 in total
White: 1
Green: 2 (2 types)

(2) Connection to the indoor unit

♦Use the cables that fit the connectors on the indoor unit control board.

1) External output cable (with a yellow connector)
This cable is used to connect a relay circuit for an interlocked operation with either an electric or a panel heater. Connect the cable to CN24 on the indoor unit control board.

2) Panel heater connector (with a white connector)
This connector is used to perform an interlocked operation with a panel heater. Depending on the indoor unit control board specification, connect the cable to CN4Y as appropriate

<Image>

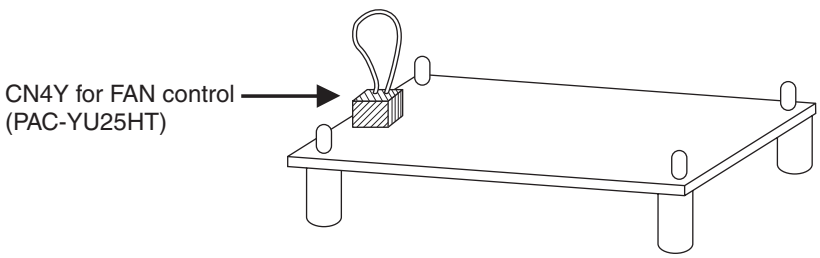

(3) Locally procured wiring

♦A basic connection method is shown below.

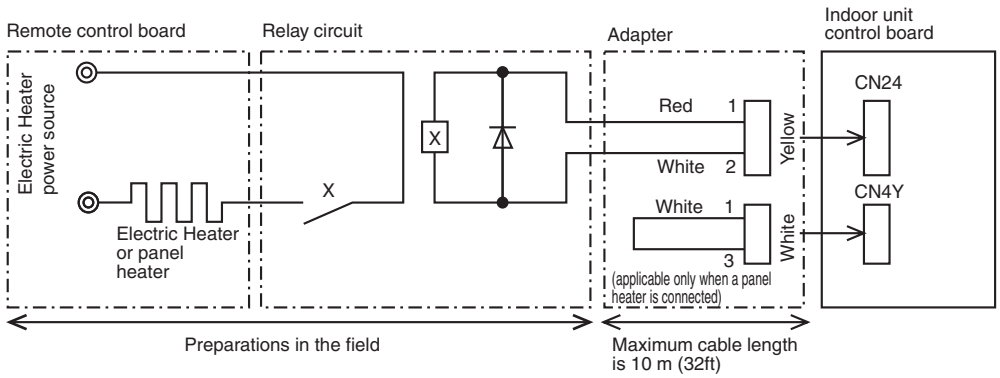

♦For relay X use the specifications given below Operation coil
Rated voltage: 12VDC
Power consumption: 0.9W or less
* Use the diode that is recommended by the relay manufacturer at both ends of the relay coil.
♦The length of the electrical wiring for the PAC-YU25HT is 2 meters (6-1/2 ft.)
♦To extend this length, use sheathed 2-core cable.
Control cable type: CVV, CVS, CPEV or equivalent.
Cable size: 0.5 mm^2 ~ 1.25 mm^2 (16 to 22 AWG)
Don't extend the cable more than 10 meters (32ft)

Recommended circuit

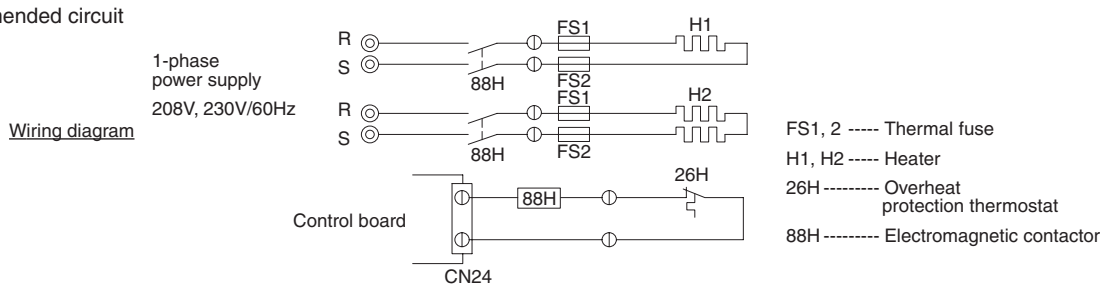

(4) Wiring restrictions

♦Keep the length of the cable connecting to the circuit board of the indoor unit shorter than 10 meters (32ft).
♦Longer than 10 meters (32ft) could cause improper operation.
♦Use a transit relay when extending wiring such as remote wiring.

10 TROUBLESHOOTING

10-1. CAUTIONS ON TROUBLESHOOTING

(1) Before troubleshooting, check the followings:

① Check the power supply voltage.

② Check the indoor/outdoor connecting wire for mis-wiring.

(2) Take care the followings during servicing.

① Before servicing the air conditioner, be sure to turn off the remote controller first to stop the main unit, and then turn off the breaker.

② When removing the indoor controller board, hold the edge of the board with care NOT to apply stress on the components.

③ When connecting or disconnecting the connectors, hold the housing of the connector. DO NOT pull the lead wires.

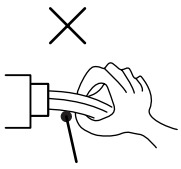

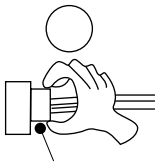

10-2. SELF-CHECK FUNCTION

- **Refer to the installation manual that comes with each remote controller for details.**
- **RF thermostat is not established.**

[Output pattern A] Errors detected by indoor unit

IR wireless remote controller	Wired remote controller RF thermostat	Symptom	Remark
Beeper sounds/OPERATION INDICATOR lamp flashes (Number of times)	Check code		
1	P1	Intake sensor error	
2	P2, P9	Pipe (Liquid or 2-phase pipe) sensor error	
3	E6, E7	Indoor/outdoor unit communication error	
4	P4	Drain sensor error	
5	P5	Drain pump error	
6	P6	Freezing/Overheating safeguard operation	
7	EE	Communication error between indoor and outdoor units	
8	P8	Pipe temperature error	
9	E4	Remote controller signal receiving error	
10	–	–	
11	–	–	
12	Fb	Indoor unit control system error (memory error, etc.)	
No sound	– –	No corresponding	

[Output pattern B] Errors detected by unit other than indoor unit (outdoor unit, etc.)

IR wireless remote controller	Wired remote controller RF thermostat	Symptom	Remark
Beeper sounds/OPERATION INDICATOR lamp flashes (Number of times)	Check code		
1	E9	Indoor/outdoor unit communication error (Transmitting error) (Outdoor unit)	For details, check the LED display of the outdoor controller board.
2	UP	Compressor overcurrent interruption	
3	U3, U4	Open/short of outdoor unit thermistors	
4	UF	Compressor overcurrent interruption (When compressor locked)	
5	U2	Abnormal high discharging temperature/49C worked/ insufficient refrigerant	
6	U1, Ud	Abnormal high pressure (63H worked)/ Overheating safeguard operation	
7	U5	Abnormal temperature of heat sink	
8	U8	Outdoor unit fan protection stop	
9	U6	Compressor overcurrent interruption/Abnormal of power module	
10	U7	Abnormality of super heat due to low discharge temperature	
11	U9, UH	Abnormality such as overvoltage or voltage shortage and abnormal synchronous signal to main circuit/Current sensor error	
12	–	–	
13	–	–	
14	Others	Other errors (Refer to the technical manual for the outdoor unit.)	

***1 If the beeper does not sound again after the initial two beeps to confirm the self-check start signal was received and the OPERATION INDICATOR lamp does not come on, there are no error records.**

***2 If the beeper sounds three times continuously "beep, beep, beep (0.4 + 0.4 + 0.4 sec.)" after the initial two beeps to confirm the self-check start signal was received, the specified refrigerant address is incorrect.**

- On IR wireless remote controller
  The continuous buzzer sounds from receiving section of indoor unit.
  Blink of operation lamp
- On wired remote controller
  Check code displayed on the LCD.

- If the unit cannot be operated properly after the above test run has been performed, refer to the following table to remove the cause.

Symptom			Cause
Wired remote controller		LED 1, 2 (PCB in outdoor unit)	
PLEASE WAIT	For about 2 minutes following power-on	After LED 1, 2 are lighted, LED 2 is turned off, then only LED 1 is lighted. (Correct operation)	• For about 2 minutes after power-on, operation of the remote controller is not possible due to system start-up. (Correct operation)
PLEASE WAIT → Error code	After about 2 minutes has expired following power-on	Only LED 1 is lighted. → LED 1, 2 blink.	• Connector for the outdoor unit's protection device is not connected. • Reverse or open phase wiring for the outdoor unit's power terminal block (L1, L2, L3)
Display messages do not appear even when operation switch is turned ON (operation lamp does not light up).		Only LED 1 is lighted. → LED 1, 2 blinks twice, LED 2 blinks once.	• Incorrect wiring between indoor and outdoor units (incorrect polarity of S1, S2, S3) • Remote controller wire short

On the IR wireless remote controller with conditions above, following phenomena takes place.
- No signals from the remote controller are accepted.
- OPE lamp is blinking.
- The buzzer makes a short ping sound.

Note:
Operation is not possible for about 30 seconds after cancellation of function selection. (Correct operation)

For description of each LED (LED1, 2, 3) provided on the indoor controller, refer to the following table.

LED 1 (power for microcomputer)	Indicates whether control power is supplied. Make sure that this LED is always lit.
LED 2 (power for remote controller)	Indicates whether power is supplied to the remote controller. This LED lights only in the case of the indoor unit which is connected to the outdoor unit refrigerant address “0”.
LED 3 (communication between indoor and outdoor units)	Indicates state of communication between the indoor and outdoor units. Make sure that this LED is always blinking.

AUTO RESTART FUNCTION

Indoor controller board

This model is equipped with the AUTO RESTART FUNCTION.
When the indoor unit is controlled with the remote controller, the operation mode, set temperature, and the fan speed are memorized by the indoor controller board.
The auto restart function sets to work the moment the power has restored after power failure, then, the unit will restart automatically.
Set the AUTO RESTART FUNCTION using the wireless remote controller. (Mode no.1).

10-3. SELF-DIAGNOSIS ACTION TABLE

Note: Refer to the manual of outdoor unit for the details of display such as F, U, and other E.

Error Code	Abnormal point and detection method	Cause	Countermeasure
P1	**Room temperature thermistor (TH1)** ① The unit is in three-minute resume prevention mode if short/open of thermistor is detected. Abnormal if the unit does not reset normally after three minutes. (The unit returns to normal operation, if it has normally reset.) ② Constantly detected during cooling, drying and heating operation Short: 90˚C[194˚F] or more Open: -40˚C[-40˚F] or less	① Defective thermistor characteristics ② Contact failure of connector (CN20) on the indoor controller board (Insert failure) ③ Breaking of wire or contact failure of thermistor wiring ④ Defective indoor controller board	①–③ Check resistance value of thermistor. 0℃[32˚F].....15.0kΩ 10℃[50˚F].....9.6kΩ 20℃[68˚F].....6.3kΩ 30℃[86˚F].....4.3kΩ 40℃[104˚F]...3.0kΩ If you put force on (draw or bend) the lead wire with measuring resistance value of thermistor breaking of wire or contact failure can be detected. ② Check contact failure of connector (CN20) on the indoor controller board. Refer to 10-5. Turn the power on again and check restart after inserting connector again. ④ Check room temperature display on remote controller. Replace indoor controller board if there is abnormal difference with actual room temperature. Turn the power off, and on again to operate after check.
P2	**Pipe temperature thermistor/Liquid (TH2)** ① The unit is in three-minute resume prevention mode if short/open of thermistor is detected. Abnormal if the unit does not reset normally after three minutes. (The unit returns to normal operation, if it has normally reset.) ② Constantly detected during cooling, drying, and heating (except defrosting) operation. Short: 90˚C[194˚F] or more Open: -40˚C[-40˚F] or less	① Defective thermistor characteristics ② Contact failure of connector (CN44) on the indoor controller board (Insert failure) ③ Breaking of wire or contact failure of thermistor wiring ④ Defective refrigerant circuit is causing thermistor temperature of 90˚C[194˚F] or more or -40˚C[-40˚F] or less. ⑤ Defective indoor controller board	①–③ Check resistance value of thermistor. For characteristics, refer to (P1) above. ② Check contact failure of connector (CN44) on the indoor controller board. Refer to 10-5. Turn the power on again and check restart after inserting connector again. ④ Check pipe <liquid> temperature with remote controller in test run mode. If pipe <liquid> temperature is extremely low (in cooling mode) or high (in heating mode), refrigerant circuit may have defective. ⑤ Check pipe <liquid> temperature with remote controller in test run mode. If there is extreme difference with actual pipe <liquid> temperature, replace indoor controller board. Turn the power off, and on again to operate after check.
P4 (5701)	**Contact failure of drain float switch (CN4F)** ① Extract when the connector of drain float switch is disconnected. (③ and ④ of connector CN4F is not short-circuited.) ② Constantly detected during operation.	① Contact failure of connector (Insert failure) ② Defective indoor controller board	① Check contact failure of float switch connector. Turn the power on again and check after inserting connector again. ② Operate with connector (CN4F) short-circuited. Replace indoor controller board if abnormality reappears.
P5	**Drain overflow protection operation** ① Suspensive abnormality, if drain float switch is detected to be underwater for 1 minute and 30 seconds continuously with drain pump on. Turn off compressor and indoor fan. ② Drain pump is abnormal if the condition above is detected during suspensive abnormality. ③ Constantly detected during drain pump operation.	① Malfunction of drain pump ② Defective drain Clogged drain pump Clogged drain pipe ③ Defective drain float switch Catch of drain float switch or malfunction of moving parts cause drain float switch to be detected under water (Switch On) ④ Defective indoor-controller board	① Check if drain-up machine works. ② Check drain function. ③ Remove drain float switch connector CN4F and check if it is short (Switch On) with the moving part of float switch UP, or OPEN with the moving part of float switch down. Replace float switch if it is short with the moving part of float switch down. ④ Replace indoor controller board if it is short-circuited between ③-④ of the drain float switch connector CN4F and abnormality reappears. It is not abnormal if there is no problem about the above-mentioned ①~④ Turn the power off, and on again to operate after check.

Error Code	Abnormal point and detection method	Cause	Countermeasure
P6	**Freezing/overheating protection is working** ① Freezing protection (Cooling mode) The unit is in six-minute resume prevention mode if pipe <liquid or condenser/evaporator> temperature stays under -15℃[5˚F] for three minutes after the compressor started. Abnormal if it stays under -15℃[5˚F] for three minutes again within 16 minutes after six-minute resume prevention mode. ② Overheating protection (Heating mode) The units is in six-minute resume prevention mode if pipe <Liquid or condenser / evaporator> temperature is detected as over 70℃[158˚F] after the compressor started. Abnormal if the temperature of over 70℃[158˚F] is detected again within 10 minutes after six-minute resume prevention mode.	(Cooling or drying mode) ① Clogged filter (reduced airflow) ② Short cycle of air path ③ Low-load (low temperature) operation beyond the tolerance range ④ Defective indoor fan motor • Fan motor is defective. • Indoor controller board is defective. ⑤ Defective outdoor fan control ⑥ Overcharge of refrigerant ⑦ Defective refrigerant circuit (clogs)	(Cooling or drying mode) ① Check clogging of the filter. ② Remove shields. ④ Refer to 10-8. DC Fan motor (FAN MOTOR/ INDOOR CONTROLLER BOARD) ⑤ Check outdoor fan motor. ⑥⑦ Check operating condition of refrigerant circuit.
		(Heating mode) ① Clogged filter (reduced airflow) ② Short cycle of air path ③ Over-load (high temperature) operation beyond the tolerance range ④ Defective indoor fan motor • Fan motor is defective. • Indoor controller board is defective. ⑤ Defective outdoor fan control ⑥ Overcharge of refrigerant ⑦ Defective refrigerant circuit (clogs) ⑧ Bypass circuit of outdoor unit is defective.	(Heating mode) ① Check clogs of the filter. ② Remove shields. ④ Refer to 10-8. DC Fan motor (FAN MOTOR/ INDOOR CONTROLLER BOARD) ⑤ Check outdoor fan motor. ⑥~⑧Check operating condition of refrigerant circuit.
P8	**Pipe temperature** <Cooling mode> Detected as abnormal when the pipe temperature is not in the cooling range 3 minutes after compressor start and 6 minutes after the liquid or condenser/evaporator pipe is out of cooling range. Note 1) It takes at least 9 minutes. to detect. Note 2) Abnormality P8 is not detected in drying mode. Cooling range : -3 deg˚C(-5.4deg˚F) ≧ (TH-TH1) TH: Lower temperature between: liquid pipe temperature (TH2) and condenser/evaporator temperature (TH5) TH1: Intake temperature <Heating mode> When 10 seconds have passed after the compressor starts operation and the hot adjustment mode has finished, the unit is detected as abnormal when condenser/evaporator pipe temperature is not in heating range within 20 minutes. Note 3) It takes at least 27 minutes to detect abnormality. Note 4) It excludes the period of defrosting (Detection restarts when defrosting mode is over) Heating range : 3 deg˚C(5.4deg˚F) ≦ (TH5-TH1)	① Slight temperature difference between indoor room temperature and pipe <liquid or condenser / evaporator> temperature thermistor • Shortage of refrigerant • Disconnected holder of pipe <liquid or condenser / evaporator> thermistor • Defective refrigerant circuit ② Converse connection of extension pipe (on plural units connection) ③ Converse wiring of indoor/ outdoor unit connecting wire (on plural units connection) ④ Defective detection of indoor room temperature and pipe <condenser / evaporator> temperature thermistor ⑤ Stop valve is not opened completely.	①~④ Check pipe <liquid or condenser / evaporator> temperature with room temperature display on remote controller and outdoor controller circuit board. Pipe <liquid or condenser / evaporator> temperature display is indicated by setting SW2 of outdoor controller circuit board as follows. (Conduct temperature check with outdoor controller circuit board after connecting 'A-Control Service Tool(PAC-SK52ST)'.) ②③Check converse connection of extension pipe or converse wiring of indoor/outdoor unit connecting wire.

Error Code	Abnormal point and detection method	Cause	Countermeasure
P9	**Abnormality of pipe temperature thermistor / Condenser-Evaporator (TH5)** ① The unit is in three-minute resume protection mode if short/open of thermistor is detected. Abnormal if the unit does not get back to normal within three minutes. (The unit returns to normal operation, if it has normally reset.) ② Constantly detected during cooling, drying, and heating operation (except defrosting) Short: 90˚C[194˚F] or more Open: -40˚C[-40˚F] or less	① Defective thermistor characteristics ② Contact failure of connector (CN44) on the indoor controller board (Insert failure) ③ Breaking of wire or contact failure of thermistor wiring ④ Temperature of thermistor is 90℃[194˚F] or more or -40˚C[-40˚F] or less caused by defective refrigerant circuit. ⑤ Defective indoor controller board	①–③ Check resistance value of thermistor. For characteristics, refer to (P1) above. ② Check contact failure of connector (CN44) on the indoor controller board. Refer to 10-5. Turn the power on and check restart after inserting connector again. ④ Operate in test run mode and check pipe <condenser / evaporator> temperature. If pipe <condenser / evaporator> temperature is extremely low (in cooling mode) or high (in heating mode), refrigerant circuit may have defect. ⑤ When no problems are found in ①-④ above, replace the indoor unit control board.
E0 or E4	**Remote controller transmission error(E0)/signal receiving error(E4)** ① Abnormal if main or sub remote controller can not receive normally any transmission from indoor unit of refrigerant address “0” for three minutes. (Error code : E0) ② Abnormal if sub remote controller could not receive for any signal for two minutes. (Error code: E0) ① Abnormal if indoor controller board can not receive normally any data from remote controller board or from other indoor controller board for three minutes. (Error code: E4) ② Indoor controller board cannot receive any signal from remote controller for two minutes. (Error code: E4)	① Contact failure at transmission wire of remote controller ② All remote controllers are set as “sub” remote controller. In this case, E0 is displayed on remote controller, and E4 is displayed at LED (LED1, LED2) on the outdoor controller circuit board. ③ Mis-wiring of remote controller ④ Defective transmitting receiving circuit of remote controller ⑤ Defective transmitting receiving circuit of indoor controller board of refrigerant address “0” ⑥ Noise has entered into the transmission wire of remote controller.	① Check disconnection or looseness of indoor unit or transmission wire of remote controller. ② Set one of the remote controllers “main”. If there is no problem with the action above. ③ Check wiring of remote controller. • Total wiring length: max.500m (Do not use cable × 3 or more) • The number of connecting indoor units: max.16units • The number of connecting remote controller: max.2units When it is not the above-mentioned problem of ①~③ ④ Diagnose remote controllers. a) When “RC OK” is displayed, Remote controllers have no problem. Turn the power off, and on again to check. If abnormality generates again, replace indoor controller board. b) When “RC NG” is displayed, Replace remote controller. c) When “RC E3” is displayed, d) When “ERC 00-06” is displayed, [c),d)→Noise may be causing abnormality.] ∗ If the unit is not normal after replacing indoor controller board in group control, indoor controller board of address “0” may be abnormal.
E3 or E5	**Remote controller transmission error(E3)/signal receiving error(E5)** ① Abnormal if remote controller could not find blank of transmission path for six seconds and could not transmit. (Error code: E3) ② Remote controller receives transmitted data at the same time, compares the data, and when detecting it, judges different data to be abnormal 30 continuous times. (Error code: E3) ① Abnormal if indoor controller board could not find blank of transmission path. (Error code: E5) ② Indoor controller board receives transmitted data at the same time, compares the data,and when detecting it, judges different data to be abnormal 30 continuous times. (Error code: E5)	① Two remote controller are set as “main.” (In case of 2 remote controllers) ② Remote controller is connected with two indoor units or more. ③ Repetition of refrigerant address ④ Defective transmitting receiving circuit of remote controller ⑤ Defective transmitting receiving circuit of indoor controller board ⑥ Noise has entered into transmission wire of remote controller.	① Set a remote controller to main, and the other to sub. ② Remote controller is connected with only one indoor unit. ③ The address changes to a separate setting. ④~⑥ Diagnose remote controller. a) When “RC OK”is displayed, remote controllers have no problem. Turn the power off,and on again to check. When becoming abnormal again, replace indoor controller board. b)When “RC NG”is displayed, replace remote controller. c)When “RC E3”or “ERC 00-66”is displayed, noise may be causing abnormality.

Error Code	Abnormal point and detection method	Cause	Countermeasure
E6	**Indoor/outdoor unit communication error (Signal receiving error)** ① Abnormal if indoor controller board cannot receive any signal normally for six minutes after turning the power on. ② Abnormal if indoor controller board cannot receive any signal normally for three minutes. ③ Consider the unit as abnormal under the following condition: When two or more indoor units are connected to an outdoor unit, indoor controller board cannot receive a signal for three minutes from outdoor controller circuit board, a signal which allows outdoor controller circuit board to transmit signals.	① Contact failure, short circuit or, mis-wiring (converse wiring) of indoor/outdoor unit connecting wire ② Defective transmitting receiving circuit of indoor controller board ③ Defective transmitting receiving circuit of indoor controller board ④ Noise has entered into indoor/ outdoor unit connecting wire.	* Check LED display on the outdoor control circuit board. (Connect A-control service tool, PAC-SK52ST.) Refer to EA-EC item if LED displays EA-EC. ① Check disconnection or looseness of indoor/ outdoor unit connecting wire of indoor unit or outdoor unit. Check all the units in case of twin triple indoor unit system. ②-④ Turn the power off, and on again to check. If abnormality generates again, replace indoor controller board or outdoor controller circuit board. * Other indoor controller board may have defect in case of twin triple indoor unit system.
E7	**Indoor/outdoor unit communication error (Transmitting error)** Abnormal if "1" receiving is detected 30 times continuously though indoor controller board has transmitted "0".	① Defective transmitting receiving circuit of indoor controller board ② Noise has entered into power supply. ③ Noise has entered into outdoor control wire.	①-③ Turn the power off, and on again to check. If abnormality generates again, replace indoor controller board.
Fb	**Indoor controller board** Abnormal if data cannot be read normally from the nonvolatile memory of the indoor controller board.	① Defective indoor controller board	① Replace indoor controller board.
E1 or E2	**Remote controller control board** ① Abnormal if data cannot be read normally from the nonvolatile memory of the remote controller control board. (Error code: E1) ② Abnormal if the clock function of remote controller cannot be operated normally. (Error code: E2)	① Defective remote controller	① Replace remote controller.
PA (2500)	**Water leakage** This detection is performed during the operation (stop, heating, fan, or error stop mode etc.) other than cooling and dry. ① When a) and b) are found, water leakage occurs. a) Pipe <liquid> temperature - inlet temperature < -10˚C for 30 minutes b) When drain float switch is detected to be soaked in the water for 15 minutes or more. * When drain float switch is detected to be NOT soaked in the water, each counting of a) and b) is cleared. **<u>*When this error is detected, the error will not be reset until the main power is reset.</u>**	① Mis-piping of extension pipes (When connected with multiple units) ② Mis-wiring of indoor/outdoor unit connecting wire (When connected with multiple units) ③ Detection failure of the indoor unit inlet/pipe <liquid> thermistor ④ Drain pump failure ⑤ Drainage failure · Clogged drain pump · Clogged drain pipe ⑥ Drain float switch failure · Drain float switch is detected to be soaked in the water (ON status) due to the operation failure of the moving parts. · Contact failure of drain float switch connector (Loose connector)	①Check the extension pipes for mis-piping. ②Check the Indoor/outdoor unit connecting wire for mis-wiring. ③Check room temperature display on remote controller and indoor pipe <liquid> temperature. (Refer to the countermeasure on P2.) ④Check if drain-up machine works. ⑤ Check drain function. ⑥Check drain float switch. (Refer to the countermeasure on P4 and P5.)

10-4. TROUBLESHOOTING BY INFERIOR PHENOMENA

Note: Refer to the manual of outdoor unit for the detail of remote controller.

Phenomena	Cause	Countermeasure
(1)LED2 on indoor controller board is off.	• When LED1 on indoor controller board is also off. ① Power supply of rated voltage is not supplied to outdoor unit.	① Check the voltage of outdoor power supply terminal block (L, N) or (L_3, N). • When AC 208~230V is not detected. Check the power wiring to outdoor unit and the breaker. • When AC 208~230V is detected. —Check ② (below).
	② Defective outdoor controller circuit board	② Check the voltage between outdoor terminal block S1 and S2. • When AC 208~230V is not detected. Check the fuse on outdoor controller circuit board. Check the wiring connection. • When AC 208~230V is detected. —Check ③ (below).
	③ Power supply of 208~230V is not supplied to indoor unit.	③ Check the voltage between indoor terminal block S1 and S2. • When AC 208~230V is not detected. Check indoor/outdoor unit connecting wire for mis-wiring. • When AC 208~230V is detected. —Check ④ (below).
	④ Defective indoor controller board	④ Check the fuse on indoor controller board. Check the wiring connection. If no problem are found, indoor controller board is defective.
(2)LED2 on indoor controller board is blinking.	• When LED1 on indoor controller board is also blinking. Connection failure of indoor/outdoor unit connecting wire • When LED1 is lit.	Check indoor/outdoor unit connecting wire for connection failure.
	① Mis-wiring of remote controller wires Under twin triple indoor unit system, 2 or more indoor units are wired together.	① Check the connection of remote controller wires in case of twin triple indoor unit system. When 2 or more indoor units are wired in one refrigerant system, connect remote controller wires to one of those units.
	② Refrigerant address for outdoor unit is wrong or not set. Under grouping control system, there are some units whose refrigerant address is 0.	② Check the setting of refrigerant address in case of grouping control system. If there are some units whose refrigerant addresses are 0 in one group, set one of the units to 0 using SW1 (3-6) on outdoor controller circuit board.
	③ Short-cut of remote controller wires ④ Defective remote controller	③④ Remove remote controller wires and check LED2 on indoor controller board. • When LED2 is blinking, check the short-cut of remote controller wires. • When LED2 is lit, connect remote controller wires again and: if LED2 is blinking, remote controller is defective; if LED2 is lit, connection failure of remote controller terminal block etc. has returned to normal.

10-5. TEST POINT DIAGRAM

10-5-1. Power supply board

PEAD-A24AA5
PEAD-A30AA5
PEAD-A36AA5
PEAD-A42AA5

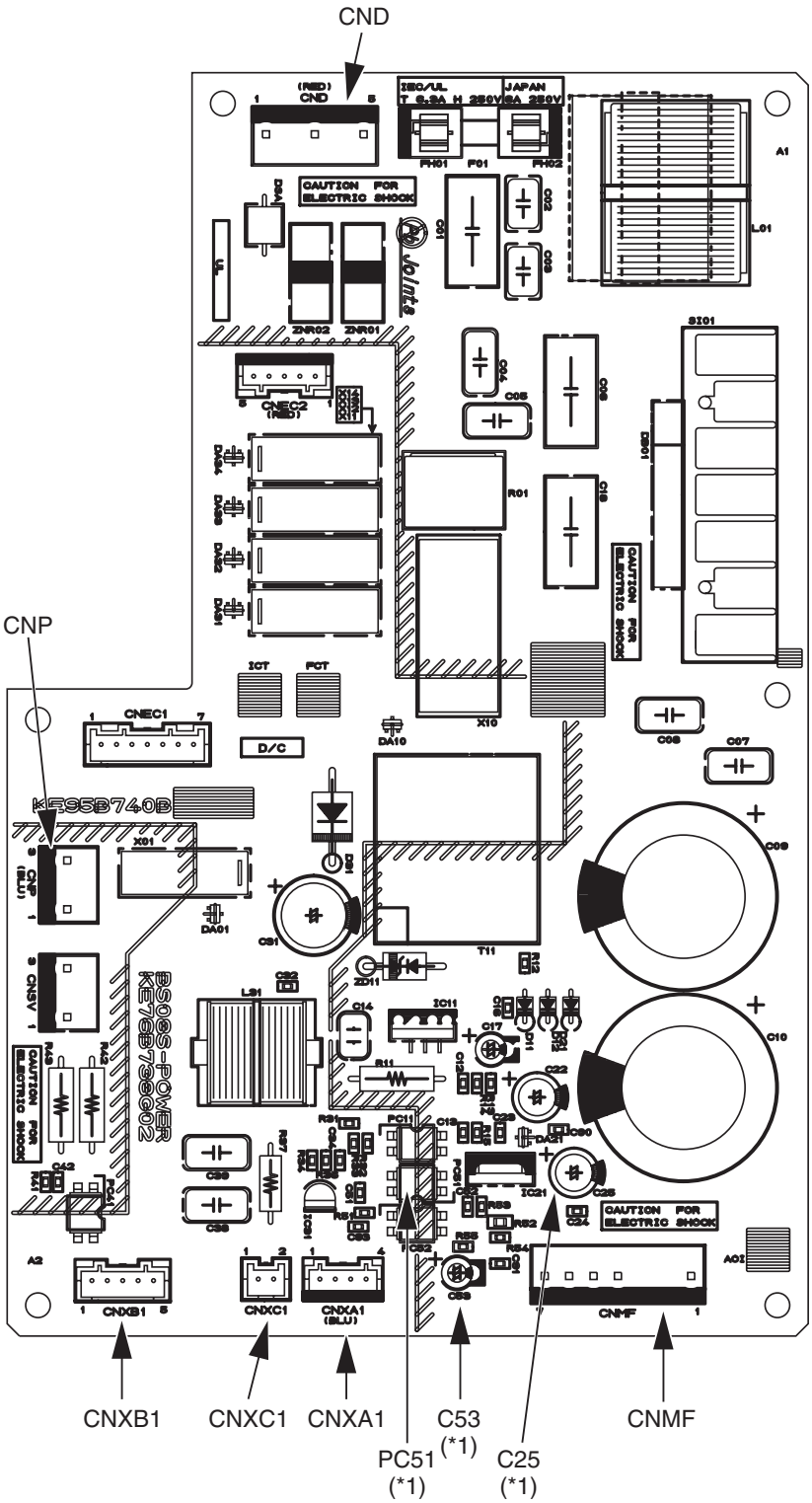

CND Power supply voltage (208 - 230VAC)

CNMF Fan motor output
1 - 4: 310 - 340 VDC
5 - 4: 15 VDC
6 - 4: 0 - 6.5 VDC
7 - 4: Stop 0 or 15 VDC
Run 7.5 VDC
(0 - 15 pulse)

CNP Drain-up mechanism output
(208 - 230VAC)

CNXA1
Connect to the indoor controller board

CNXB1
Connect to the indoor controller board

CNXC1
Connect to the indoor controller board

CNXA2
Connect to the indoor power board

CNXB2
Connect to the indoor power board

CNXC2
Connect to the indoor power board

(*1)

V_{FG} Voltage on the (-) side of PC51 and C25
(Same with the voltage between 7 (+) and 4 (-) of CNMF)

V_{CC} Voltage between the C25 pins 15 VDC
(Same with the voltage between 5 (+) and 4 (-) of CNMF)

V_{sp} Voltage between the C53 pins
0VDC (with the fan stopped)
1 - 6.5VDC (with the fan in operation)
(Same with the voltage between 6 (+) and 4 (-) of CNMF)

10-5-2. Indoor controller board

PEAD-A24AA5
PEAD-A30AA5
PEAD-A36AA5
PEAD-A42AA5

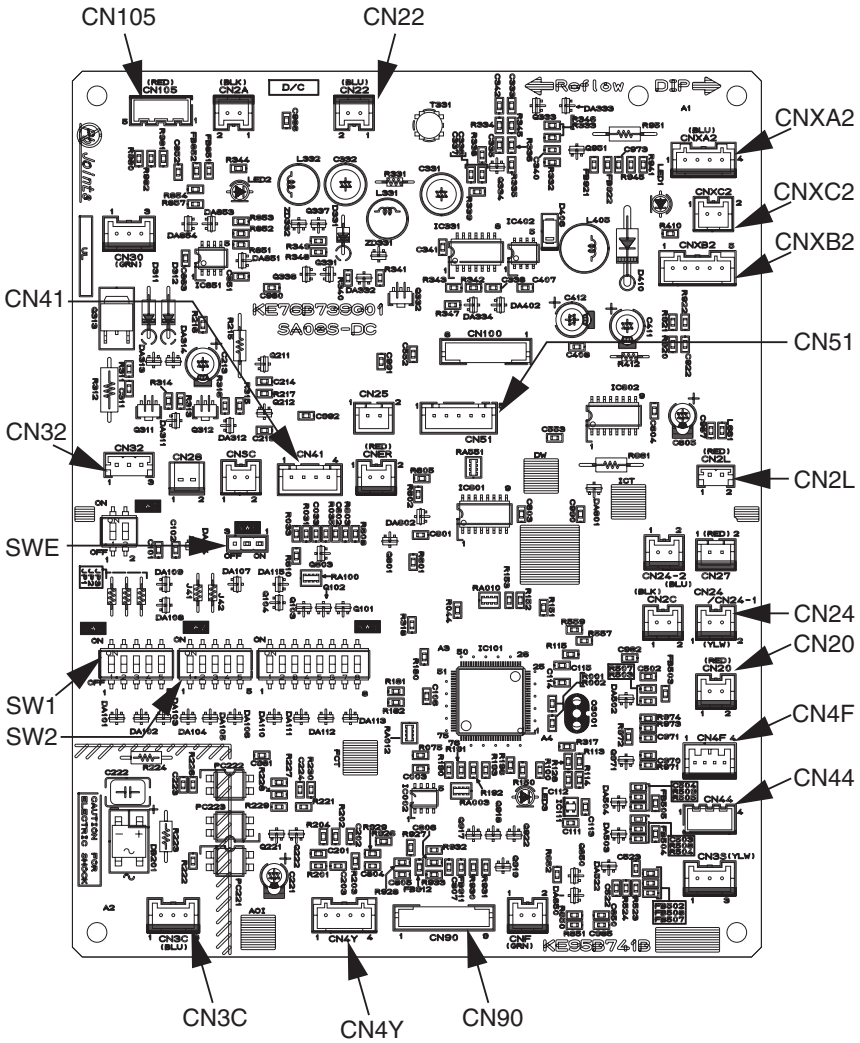

SWE Emergency operation

SW1 Model selection

SW2 Capacity setting

CN105 Radio frequency interface

CN32 Remote start/stop adapter

CN22 For MA remote controller cable connection
(10 - 13 VDC (Between 1 and 3.))

CN51 Centralized control

CN41 JAMA standard HA terminal A

CN44 Thermistor
(liquid/condenser/evaporator temperature)

CN4F Float thermistor

CN20 Thermistor (Inlet temperature)

CN24 Heater control (12VDC)

CN4Y For fan control

CN3C Indoor-outdoor transmission
(0 - 24VDC)

CN90 Wireless remote controller

CNXA2
Connect to the indoor controller board

CNXB2
Connect to the indoor controller board

CNXC2
Connect to the indoor controller board

CNXA1
Connect to the indoor power board

CNXB1
Connect to the indoor power board

CNXC1
Connect to the indoor power board

10-6. TROUBLE CRITERION OF MAIN PARTS

PEAD-A24AA5
PEAD-A30AA5
PEAD-A36AA5
PEAD-A42AA5

<table>
<tr><th>Part name</th><th>Check method and criterion</th></tr>
<tr><td>Room temperature thermistor (TH1)</td><td rowspan="3">Measure the resistance with a tester.
(Part temperature 10°C (50°F) ~ 30°C (86°F))
<table><tr><th>Normal</th><th>Abnormal</th></tr><tr><td>4.3kΩ~9.6kΩ</td><td>Opened or short-circuited</td></tr></table></td></tr>
<tr><td>Pipe temperature thermistor/liquid (TH2)</td></tr>
<tr><td>Condenser/evaporator temperature thermistor (TH5)</td></tr>
<tr><td>Wiring diagram</td><td> 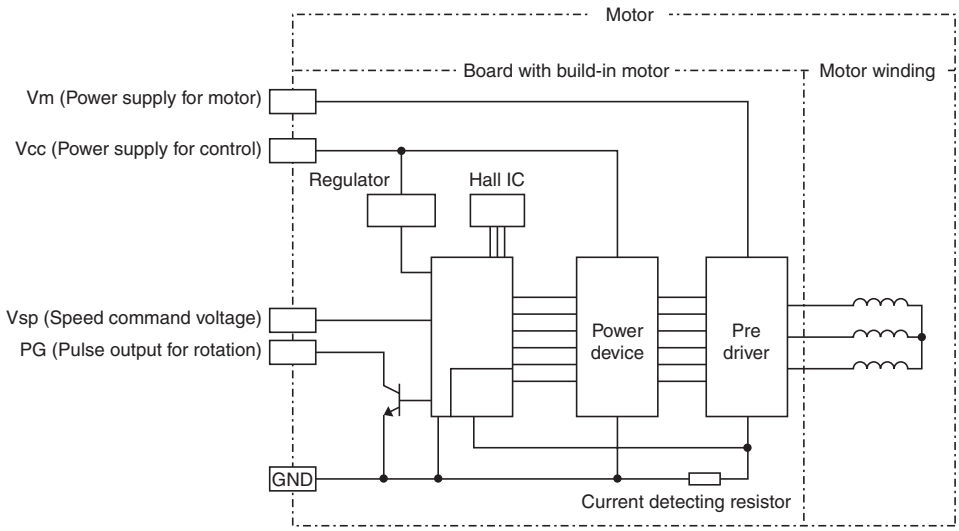
</td></tr>
</table>

10-7. Thermistor

<Thermistor Characteristic graph>

Thermistor for lower temperature

Room temperature thermistor (TH1)
Pipe temperature thermistor (TH2)
Condenser/evaporator temperature thermistor (TH5)

Thermistor R_0=15kΩ ± 3%
Fixed number of B=3480kΩ ± 2%

$$Rt=15\exp\{3480(\frac{1}{273+t}-\frac{1}{273})\}$$

0°C	(32°F)	15kΩ
10°C	(50°F)	9.6kΩ
20°C	(68°F)	6.3kΩ
25°C	(77°F)	5.2kΩ
30°C	(86°F)	4.3kΩ
40°C	(104°F)	3.0kΩ

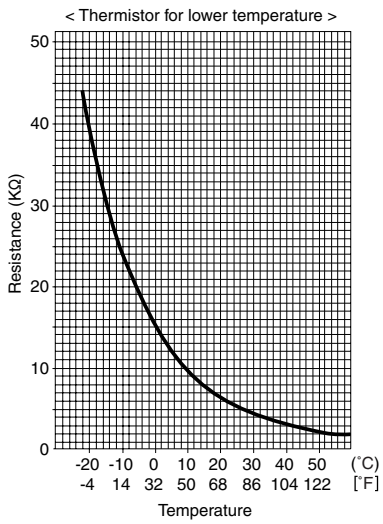

10-8. DC FAN MOTOR (FAN MOTOR/INDOOR CONTROLLER BOARD)

Check method of DC fan motor (fan motor/indoor controller circuit board)

① Notes

· High voltage is applied to the connecter (CNMF) for the fan motor. Give attention to the service.

· Do not pull out the connector (CNMF) for the motor with the power supply on.
(It causes trouble of the indoor controller circuit board and fan motor.)

② Self check

Symptom : The indoor fan cannot turn around.

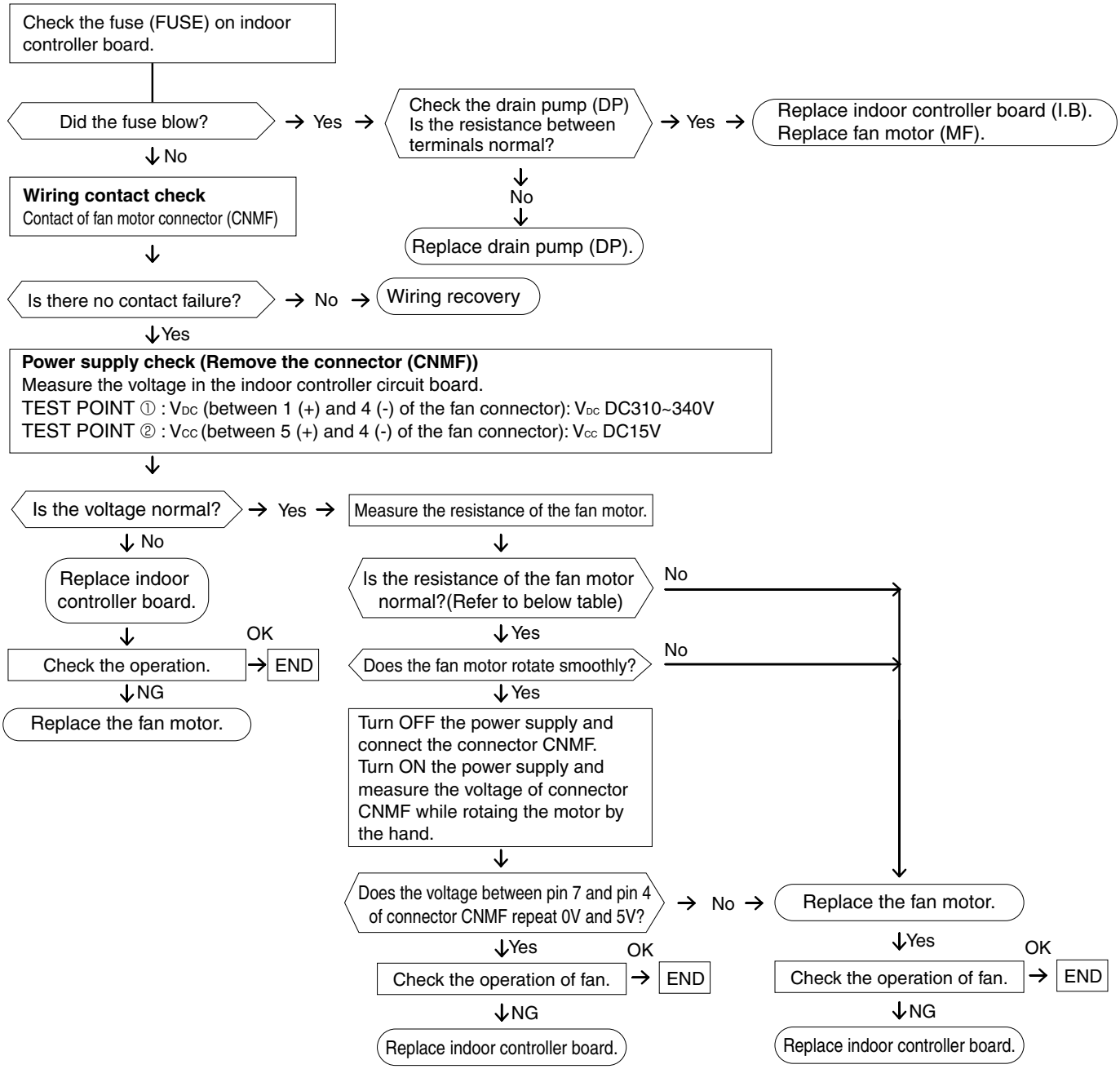

Measuring points	Resistance
pin 1 - pin 4	∞
pin 5 - pin 4	50kΩ
pin 6 - pin 4	150kΩ
pin 7 - pin 4	∞

*To measure the resistance, connect the negative (-) end of the tester to pin 4.

10-9. FUNCTIONS OF DIP SWITCH AND JUMPER WIRE

Each function is controlled by the dip switch and the jumper wire on control p.c. board.
SW1 and SW2 are equipped only for service parts.
Model setting and capacity setting are memorized in the nonvolatile memory of the control p.c. board of the unit.

(Marks in the table below) Jumper wire (○ : Short × : Open)

<table>
<tr><th>Jumper wire</th><th>Functions</th><th>Setting by the dip switch and jumper wire</th><th>Remarks</th></tr>
<tr><td>SW1</td><td>Model settings</td><td>For service board
 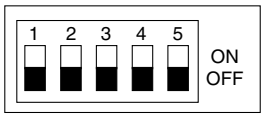
</td><td></td></tr>
<tr><td>SW2</td><td>Capacity settings</td><td>
<table>
<tr><th>MODELS</th><th>Service board</th></tr>
<tr><td>PEAD-A24AA5</td><td>
</td></tr>
<tr><td>PEAD-A30AA5</td><td>
</td></tr>
<tr><td>PEAD-A36AA5</td><td>
</td></tr>
<tr><td>PEAD-A42AA5</td><td> 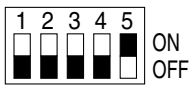
</td></tr>
</table>
</td><td></td></tr>
<tr><td>J41
J42</td><td>Pair number setting with wireless remote controller</td><td>
<table>
<tr><th rowspan="2">Wireless remote controller setting</th><th colspan="2">Control PCB setting</th></tr>
<tr><th>J41</th><th>J42</th></tr>
<tr><td>0</td><td>○</td><td>○</td></tr>
<tr><td>1</td><td>×</td><td>○</td></tr>
<tr><td>2</td><td>○</td><td>×</td></tr>
<tr><td>3 ~ 9</td><td>×</td><td>×</td></tr>
</table>
</td><td><Settings at time of factory shipment>
Wireless remote controller: 0
Control PCB: ○ (for both J41 and J42)
Four pair number settings are supported.
The pair number settings of the wireless remote controller and indoor control PCB (J41/J42) are given in the table on the left.
('×' in the table indicates the jumper line is disconnected.)</td></tr>
<tr><td>JP1</td><td>Unit type setting</td><td>
<table>
<tr><th>Model</th><th>JP1</th></tr>
<tr><td>Without TH5</td><td>○</td></tr>
<tr><td>With TH5</td><td>×</td></tr>
</table>
</td><td>There is no jumper (JP1) because these models have the cond./eva. temperature thermistor (TH5).</td></tr>
<tr><td>JP3</td><td>Indoor controller board type setting</td><td>
<table>
<tr><th>Indoor controller board type</th><th>JP3</th></tr>
<tr><td>Factory shipment</td><td>○</td></tr>
<tr><td>Service parts</td><td>○</td></tr>
</table>
</td><td></td></tr>
</table>

11 DISASSEMBLY PROCEDURE

Exercise caution when removing heavy parts.

PEAD-A24AA5
PEAD-A30AA5
PEAD-A36AA5
PEAD-A42AA5

1. Control box

1. Removing the control box cover
(1) Remove the two fixing screws on the cover (A) to remove it.
• Tighten screws to a torque of 2.0±0.2 N·m.

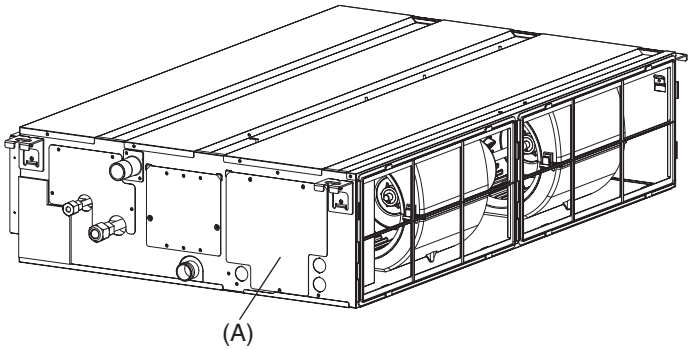

Fig. 1

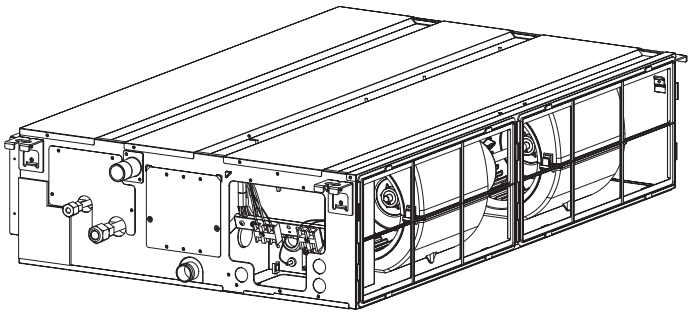

Fig. 2

2. Thermistor (Intake air)

1. Remove the control box cover according to the procedure in section 1.
(1) Pull out the thermistor holder (B) and thermistor (C) on the control box.

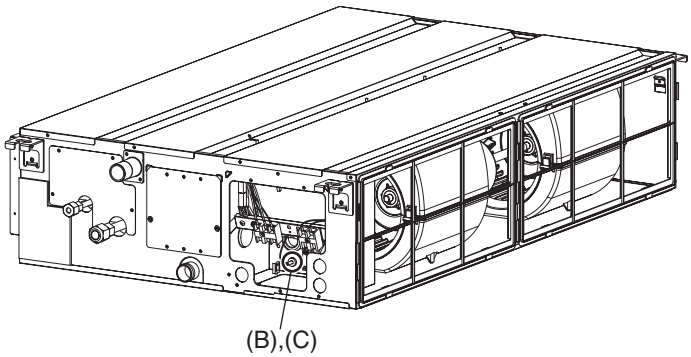

Fig. 3

Exercise caution when removing heavy parts.

3. Drainpan

1. Removing the filter and the bottom plate
(1) Push up the tab on the filter, and pull out the filter in the direction of the arrow 1.
(2) Remove the fixing screws on the bottom plate (D), (E) to remove it.
•Tighten screws to a torque of 1.4±0.2 N·m.

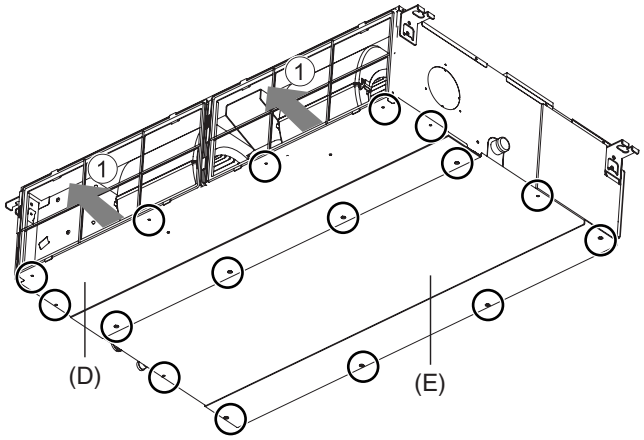

Fig. 4

2. Removing the drainpan
(1) Pull out the drain pan in the direction of the arrow 2.

Note
•Drain the water out of the drain pan before removing it.

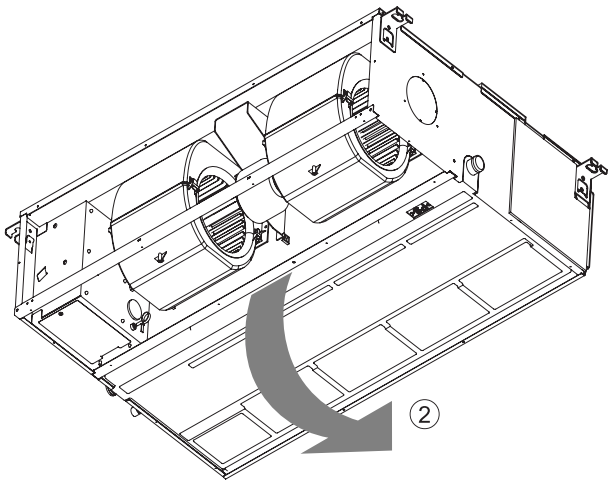

Fig. 5

Exercise caution when removing heavy parts.

4. Thermistor (Condenser/evaporator) (Liquid pipe)

1. Remove the drain pan according to the procedure in section 3.
2. Removing the Heat exchanger cover

(1) Remove the four fixing screws on the heat exchanger cover (F) to remove it.
- Tighten screws to a torque of 1.4±0.2 N·m.

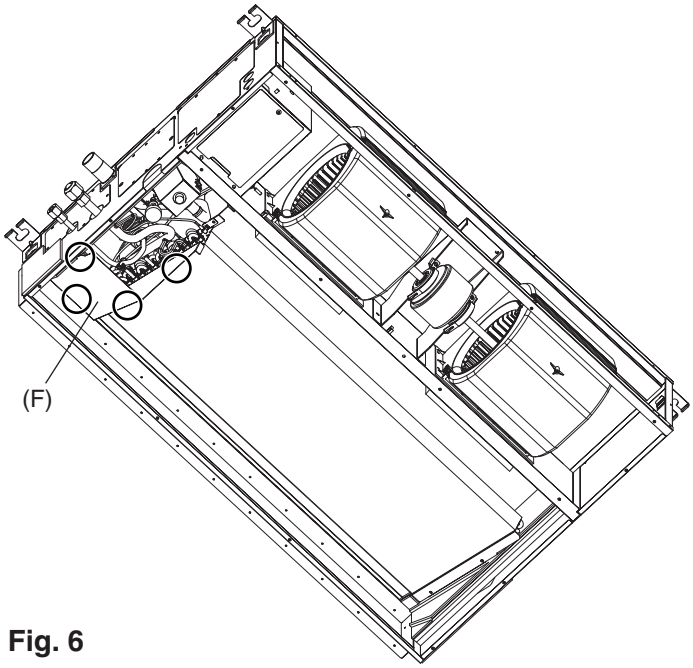

Fig. 6

3. Removing the thermistor

(1) Remove the thermistor (G) from the thermistor holder (H) on the copper tube.

Thermistor size
Liquid pipe: ø8mm
Condenser/evaporator: ø6mm

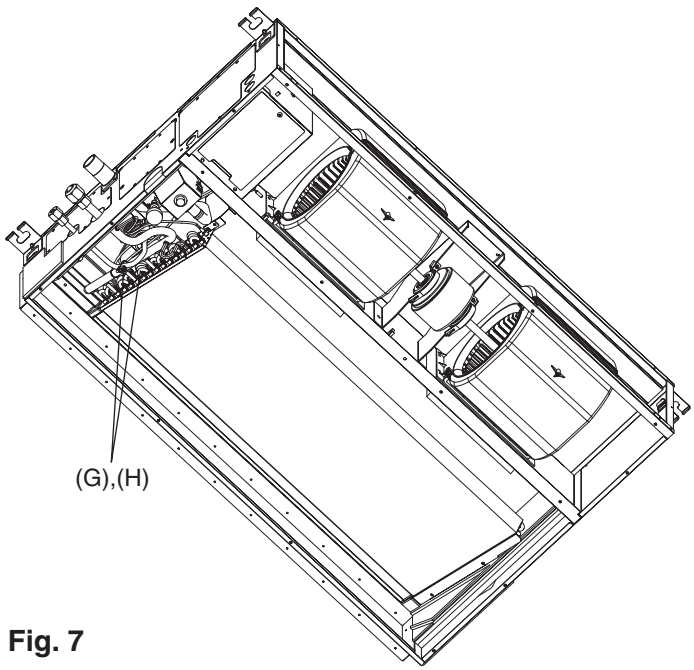

Fig. 7

Exercise caution when removing heavy parts.

5. Fan and fan motor

1. Removing the filter and the bottom plate
(1) Push down the tab on the filter, and pull out the filter in the direction of the arrow 1.
(2) Remove the fixing screws on the bottom plate (J) to remove it.
• Tighten screws to a torque of 1.4±0.2 N·m.

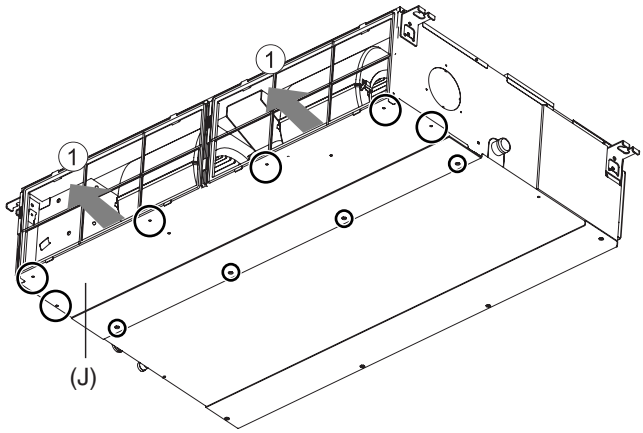

Fig. 8

2. Removing the fan casing (bottom half)
(1) Squeeze the tabs on the fan casing to remove it in the direction of arrow 2.

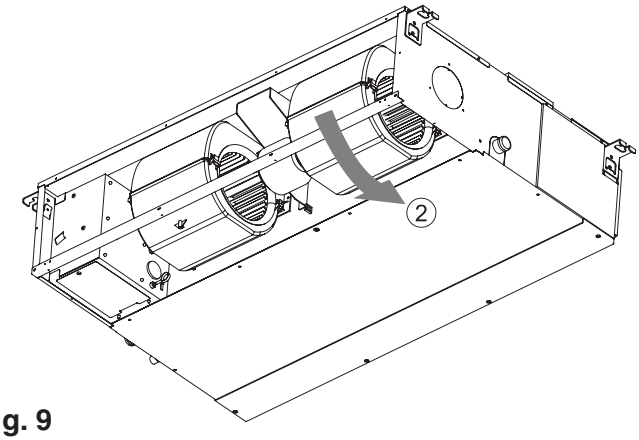

Fig. 9

3. Removing the motor cable
(1) Remove the motor cable threw the rubber bush.

4. Removing the fan motor and the Sirocco fan
(1) Remove the two motor fixing screws to remove the motor and the Sirocco fan in the direction of arrow 3.
• Tighten screws to a torque of 3.5±0.2 N·m.

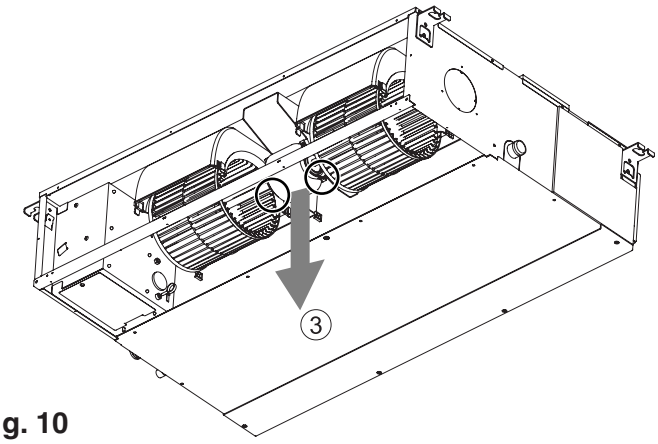

Fig. 10

(2) Remove the four fan case fixing screws to take the top half of the fan casing off.
• Tighten screws to a torque of 1.4±0.2 N·m.

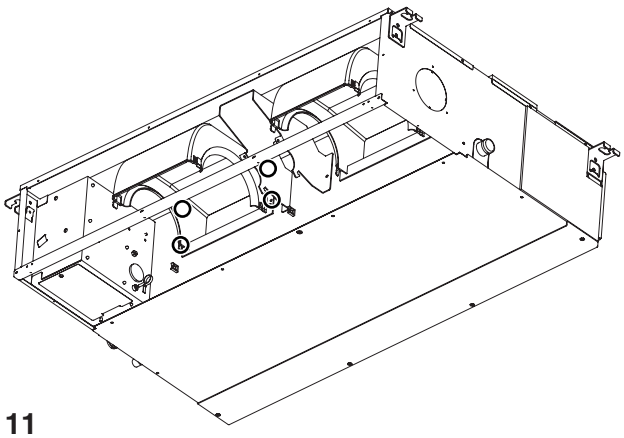

Fig. 11