MITSUBISHI ELECTRIC

SPLIT-SYSTEM HEAT PUMP

December 2014

No. OCB580

PARTS CATALOG

Series PKA Wall Mounted R410A

Indoor unit
[Model Name] [Service Ref.]

PKA-A12HA6	**PKA-A12HA6**
PKA-A18HA6	**PKA-A18HA6**

Note:
- RoHS compliant products have <G> mark on the spec name plate.

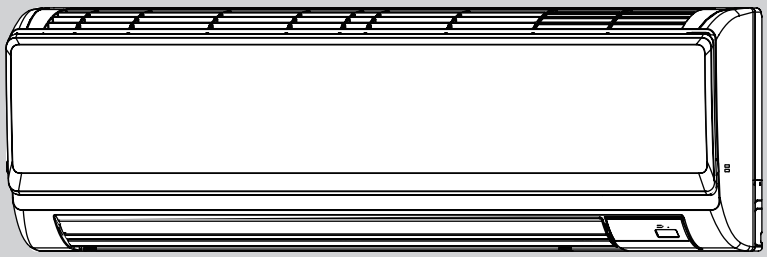

INDOOR UNIT

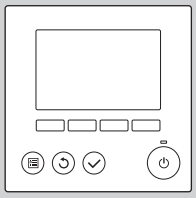

WIRED REMOTE CONTROLLER (Option)

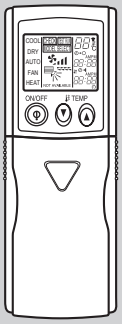

IR WIRELESS REMOTE CONTROLLER (Option)

CONTENTS

1. RoHS PARTS LIST 2

SERVICE MANUAL (OCH580)

Mr.SLIM

1 RoHS PARTS LIST

PANEL AND HEAT EXCHANGER PARTS
PKA-A12HA6 PKA-A18HA6

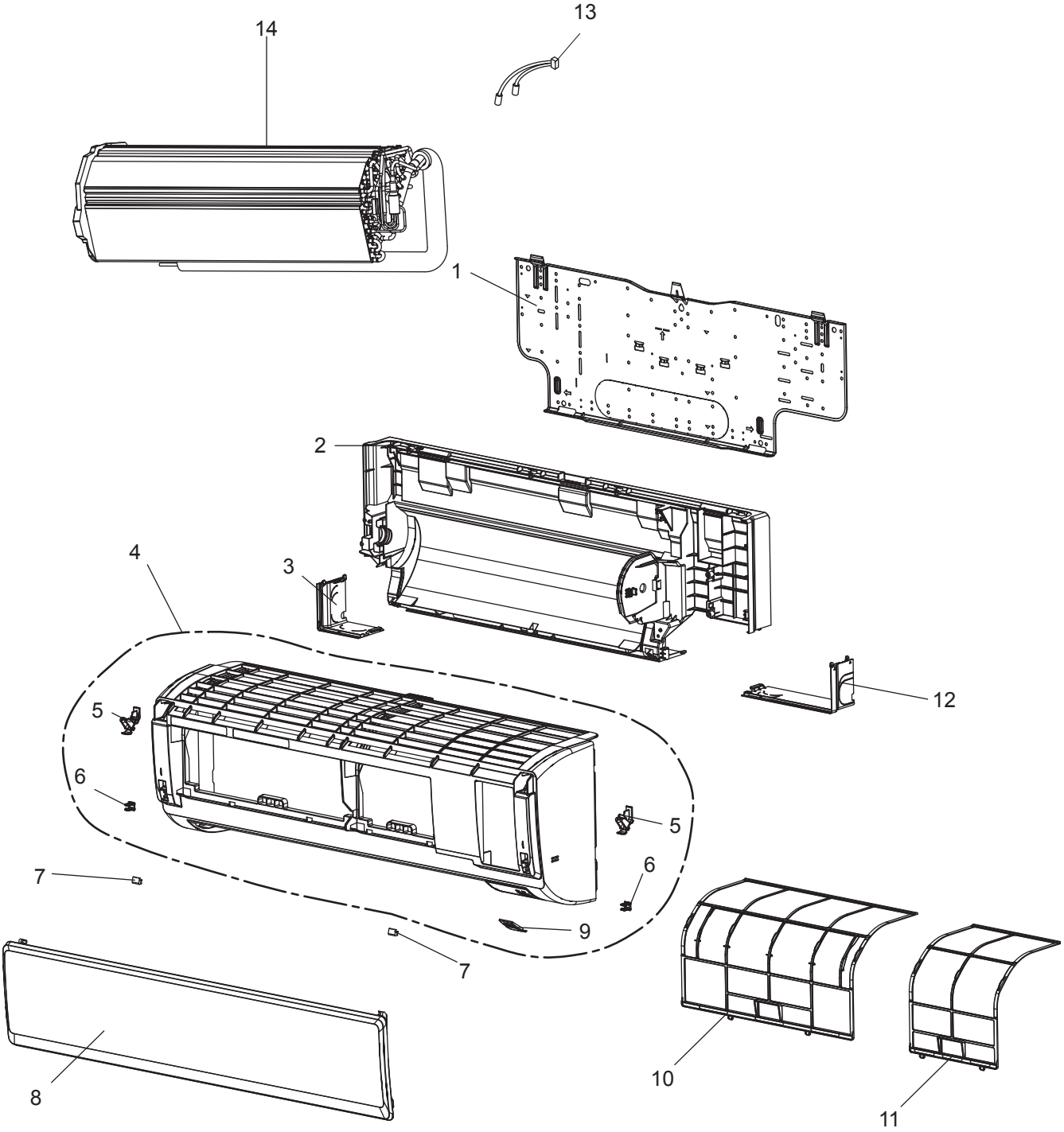

7KH00-A01GS

RoHS PARTS LIST

No.	RoHS	Parts No.	Parts Name	Specification	Q'ty/ unit PKA-A·HA6 12/18	Remarks (Drawing No.)	Wiring Diagram Symbol	Recom-mended Q'ty
1	G	R01 E08 808	BACK PLATE		1			
2	G	R01 E02 635	BOX ASSY		1			
3	G	R01 E30 658	CORNER BOX (L)		1			
4	G	R01 E19 651	FRONT PANEL		1			
5	G	R01 E14 054	HOLDER (R.L)		1	LEFT & RIGHT		
6	G	R01 E15 054	CATCH		1	2pcs/set		
7	G	R01 E05 096	SCREW CAP		1	2pcs/set		
8	G	R01 E58 691	GRILLE		1			
9	G	R01 E31 658	RECEIVER COVER		1			
10	G	R01 E27 500	FILTER (L)		1			
11	G	R01 E28 500	FILTER (R)		1			
12	G	R01 E29 658	CORNER BOX (R)		1			
13	G	R01 N17 202	THERMISTOR		1		TH2/5	
14	G	T7W N11 480	HEAT EXCHANGER		1			

RoHS PARTS LIST

FAN AND ELECTRICAL PARTS
PKA-A12HA6 PKA-A18HA6

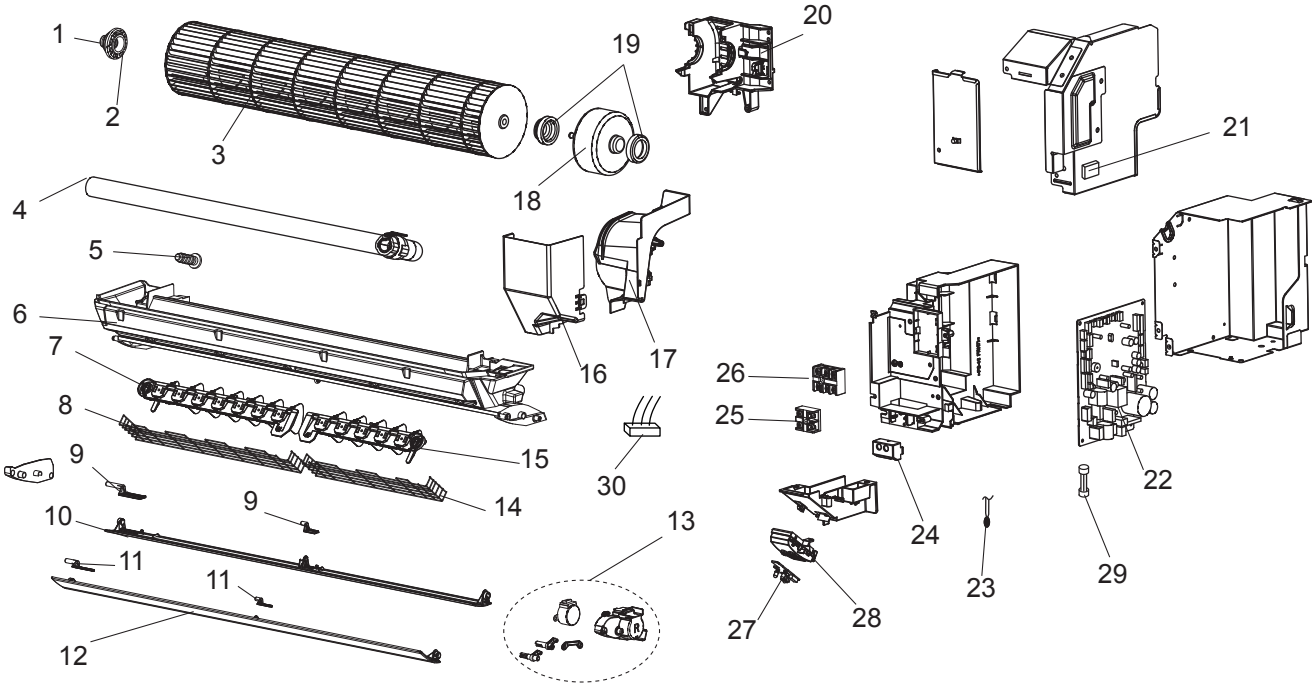

7KH00-E02ES

RoHS PARTS LIST

Parts numbers that are circled are not shown in the illustration.

No.	RoHS	Parts No.	Parts Name	Specification	Q'ty/ unit PKA-A·HA6 12/18	Remarks (Drawing No.)	Wiring Diagram Symbol	Recom-mended Q'ty
1	G	R01 E01 102	BEARING MOUNT		1			
2	G	R01 E04 103	SLEEVE BEARING		1			
3	G	R01 E42 114	LINEFLOW FAN		1			
4	G	R01 E09 527	DRAIN HOSE VP16		1			
5	G	R01 E03 524	DRAIN CAP		1			
6	G	T7W E03 530	NOZZLE ASSY		1	with No.7,15		
7	G	R01 E09 038	GUIDE VANE ASSY-L		1			
8	G	T7W E19 675	FAN GUARD-L		1			
9	G	R01 E06 063	VANE SHAFT-UC/ UL		1	2pcs/set		
10	G	R01 E32 002	AUTO VANE-U		1			
11	G	R01 E05 063	VANE SHAFT-TC/ TL		1	2pcs/set		
12	G	R01 E31 002	AUTO VANE-T		1			
13	G	R01 E27 223	VANE MOTOR		1		M	
14	G	T7W E18 675	FAN GUARD-R		1			
15	G	R01 E08 038	GUIDE VANE ASSY-R		1			
16	G	R01 E00 031	WATER COVER		1			
17	G	R01 E03 126	MOTOR BAND		1			
18	G	R01 E51 220	FAN MOTOR		1	with No.19	MS	
19	G	R01 E18 105	RUBBER MOUNT SET		1	LEFT & RIGHT		
20	G	R01 E44 130	MOTOR BED		1			
21	G	R01 E01 091	THERMISTOR HOLDER		1			
22	G	T7W C20 310	CONTROLLER BOARD		1		I.B, S.W	
23	G	R01 N23 202	THERMISTOR		1		TH1	
24	G	R01 E01 031	SWITCH BOARD COVER		1			
25	G	R01 E48 246	TERMINAL BLOCK	2P (1, 2)	1		TB5	
26	G	R01 T04 246	TERMINAL BLOCK	3P(S1, S2, S3)	1		TB4	
27	G	R01 E10 317	WIRELESS ADAPTER		1		W.B	
28	G	R01 E01 094	DISP HOLDER		1			
29	G	R01 E11 239	FUSE	3.15A 250V	1		FUSE	
30	G	R01 E12 304	LEAD (VANE MOTOR)		1			

Mr.SLIM

MITSUBISHI ELECTRIC CORPORATION

HEAD OFFICE : TOKYO BLDG., 2-7-3, MARUNOUCHI, CHIYODA-KU, TOKYO 100-8310, JAPAN

©Copyright 2014 MITSUBISHI ELECTRIC CORPORATION
Distributed in Dec. 2014 No. OCB580
Made in Japan

New publication, effective Dec. 2014
Specifications are subject to change without notice.