MITSUBISHI ELECTRIC

SPLIT-SYSTEM HEAT PUMP

December 2014

No. OCB581

PARTS CATALOG

Series PLA Ceiling Cassettes R410A

Indoor unit [Model Name]	[Service Ref.]
PLA-A12BA6	PLA-A12BA6
PLA-A18BA6	PLA-A18BA6
PLA-A24BA6	PLA-A24BA6
PLA-A30BA6	PLA-A30BA6
PLA-A36BA6	PLA-A36BA6
PLA-A42BA6	PLA-A42BA6

Note:
- RoHS compliant products have <G> mark on the spec name plate.

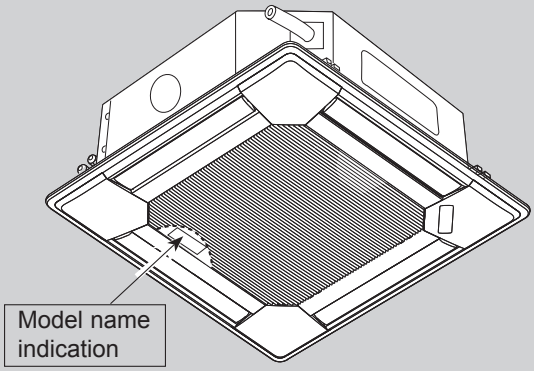

INDOOR UNIT

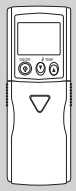

WIRELESS REMOTE CONTROLLER (Option)

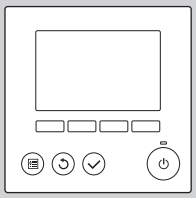

WIRED REMOTE CONTROLLER (Option)

CONTENTS

1. RoHS PARTS LIST 2

SERVICE MANUAL (OCH581)

Panel model: PLP-40BAU

Mr.SLIM

1 RoHS PARTS LIST

PANEL PARTS for PLA-A12/18/24/30/36/42BA6
PLP-40BAU (Wired)

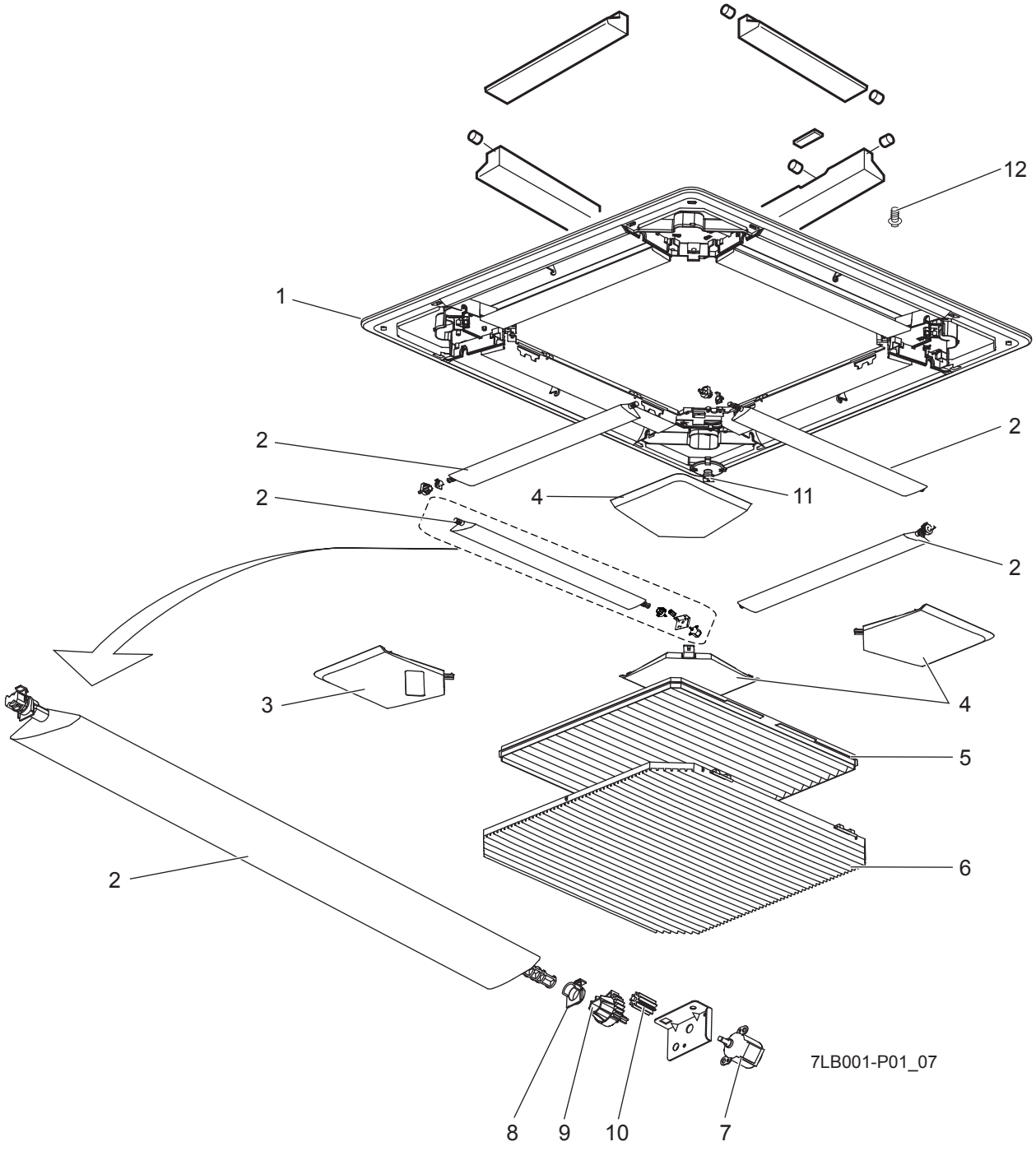

RoHS PARTS LIST

No.	RoHS	Parts No.	Parts Name	Specification	Q'ty/unit	Remarks (Drawing No.)	Wiring Diagram Symbol	Recom-mended Q'ty
					PLP-40BAU			
1	G	T7W E21 003	PANEL ASSY		1			
2	G	T7W E13 002	VANE & BUSH ASSY/ US		4			
3	G	T7W E03 638	CORNER PANEL (BAND)		1			
4	G	R01 E21 638	CORNER PANEL		3			
5	G	R01 E16 500	L. L. FILTER		1			
6	G	R01 E35 691	GRILLE ASSY		1			
7	G	R01 E19 223	STEPPING MOTOR		4		MV	
8	G	R01 E02 063	VANE BUSH		4			
9	G	R01 E03 040	GEAR(VANE)		4			
10	G	R01 E04 040	GEAR(S/M)		4			
11	G	R01 E03 523	SOCKET		1			
12	G	R01 E02 673	SCREW ASSY (PANEL)		1	4pcs/set, Accessory		

RoHS PARTS LIST

STRUCTURAL AND FUNCTIONAL PARTS
PLA-A12BA6
PLA-A18BA6
PLA-A24BA6
PLA-A30BA6
PLA-A36BA6
PLA-A42BA6

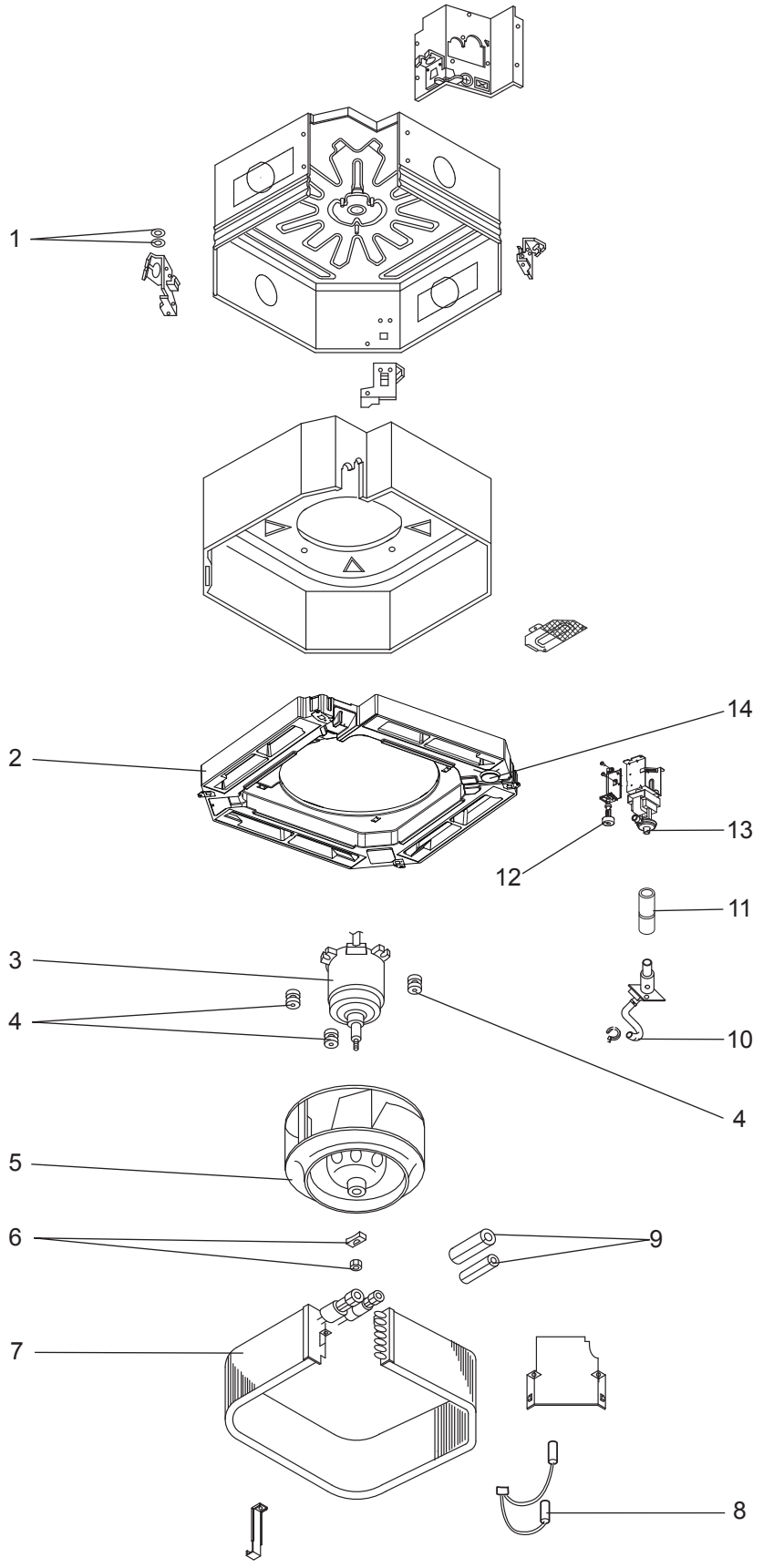

RoHS PARTS LIST

No.	RoHS	Parts No.	Parts Name	Specification	Q'ty/unit PLA-A·BA6 12, 18	24, 30	36, 42	Remarks (Drawing No.)	Wiring Diagram Symbol	Recom-mended Q'ty
1	G	R01 E13 097	WASHERS SET		1	1	1			
2	G	T7W E33 529	DRAIN PAN		1	1	1			
3	G	R01 E59 220	FAN MOTOR		1	1			MF	
	G	R01 E66 220	FAN MOTOR				1		MF	
4	G	R01 E14 105	MOTOR MOUNT		3	3	3			
5	G	R01 E39 114	TURBO FAN-S		1	1				
	G	R01 E34 114	TURBO FAN-L				1			
6	G	R01 10K 097	WASHER & NUT/ M6	M6	1	1				
	G	R01 11K 097	WASHER & NUT/ M8	M8			1			
7	G	T7W H86 480	HEAT EXCHANGER		1					
	G	T7W H88 480	HEAT EXCHANGER			1				
	G	R01 AE3 480	HEAT EXCHANGER				1			
8	G	T7W E50 202	THERMISTOR		1	1	1		TH2/TH5	
9	G	R01 E06 660	PIPE COVERS SET		1	1	1			
10	G	R01 E05 523	DRAIN SOCKET		1	1	1			
11	G	R01 E07 523	JOINT SOCKET		1	1	1			
12	G	R01 E04 272	FLOAT SENSOR		1	1	1		FS	
13	G	T7W E14 355	DRAIN PUMP		1	1	1		DP	
14	G	R01 E02 524	DRAIN PLUG		1	1	1			

RoHS PARTS LIST

ELECTRICAL PARTS
PLA-A12BA6
PLA-A18BA6
PLA-A24BA6
PLA-A30BA6
PLA-A36BA6
PLA-A42BA6

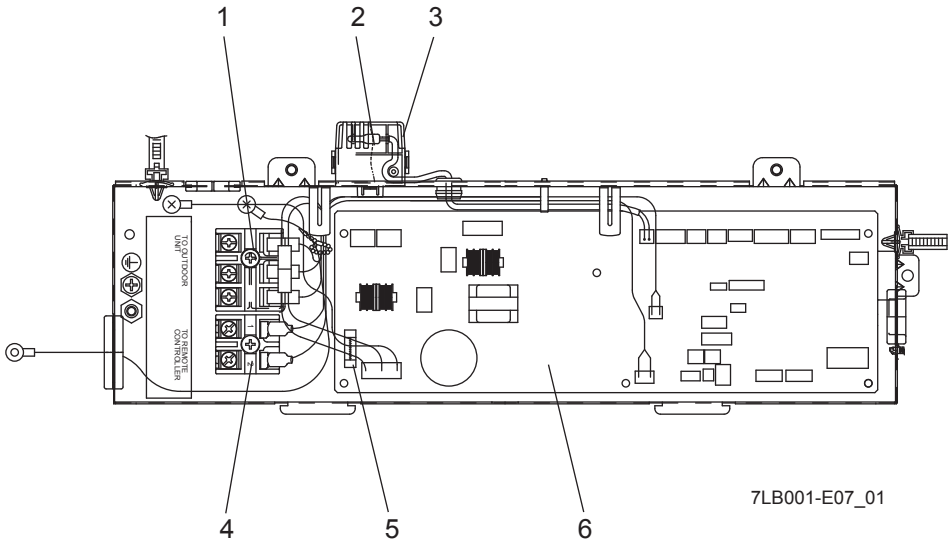

No.	RoHS	Parts No.	Parts Name	Specification	Q'ty/unit PLA-A·BA6 12/18/24/30/36/42	Remarks (Drawing No.)	Wiring Diagram Symbol	Recom-mended Q'ty
1	G	R01 E18 246	TERMINAL BLOCK	3P (S1,S2,S3)	1		TB4	
2	G	R01 H18 202	ROOM TEMP. THERMISTOR		1		TH1	
3	G	R01 E01 520	SENSOR COVER		1			
4	G	R01 E48 246	TERMINAL BLOCK	2P (1,2)	1		TB5	
5	G	R01 E14 239	FUSE 6.3A 250V	6.3A, 250V	1		FUSE	
6	G	T7W C19 310	CONTROLLER BOARD		1		I.B	

MITSUBISHI ELECTRIC CORPORATION

HEAD OFFICE : TOKYO BLDG., 2-7-3, MARUNOUCHI, CHIYODA-KU, TOKYO 100-8310, JAPAN

©Copyright 2014 MITSUBISHI ELECTRIC CORPORATION

Distributed in Dec. 2014 No.OCB581
Made in Japan

New publication, effective Dec. 2014
Specifications are subject to change without notice.