Changes for the Better

MITSUBISHI ELECTRIC

SPLIT-TYPE, HEAT PUMP AIR CONDITIONERS
SPLIT-TYPE, AIR CONDITIONERS

April 2012
No.OCB512

Outdoor unit PARTS CATALOG R410A

[Model names]	[Service Ref.]
PUZ-A42NHA5	PUZ-A42NHA5
PUZ-A42NHA5-BS	PUZ-A42NHA5-BS
PUY-A42NHA5	PUY-A42NHA5
PUY-A42NHA5-BS	PUY-A42NHA5-BS

NOTE:
- RoHS compliant products have <G> mark on the spec name plate.

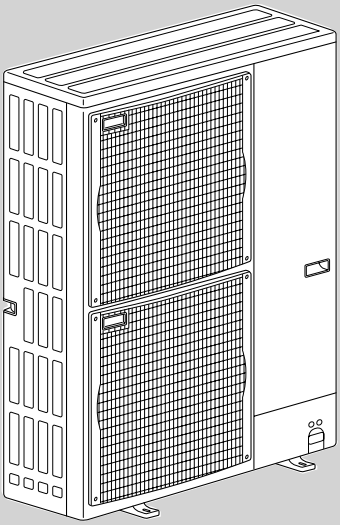

PUZ-A42NHA5
PUY-A42NHA5

CONTENTS

1. RoHS PARTS LIST·····2

SERVICE MANUAL (OCH512)

33223

Mr.SLIM™

1 RoHS PARTS LIST

FUNCTIONAL PARTS
PUZ-A42NHA5
PUZ-A42NHA5-BS
PUY-A42NHA5
PUY-A42NHA5-BS

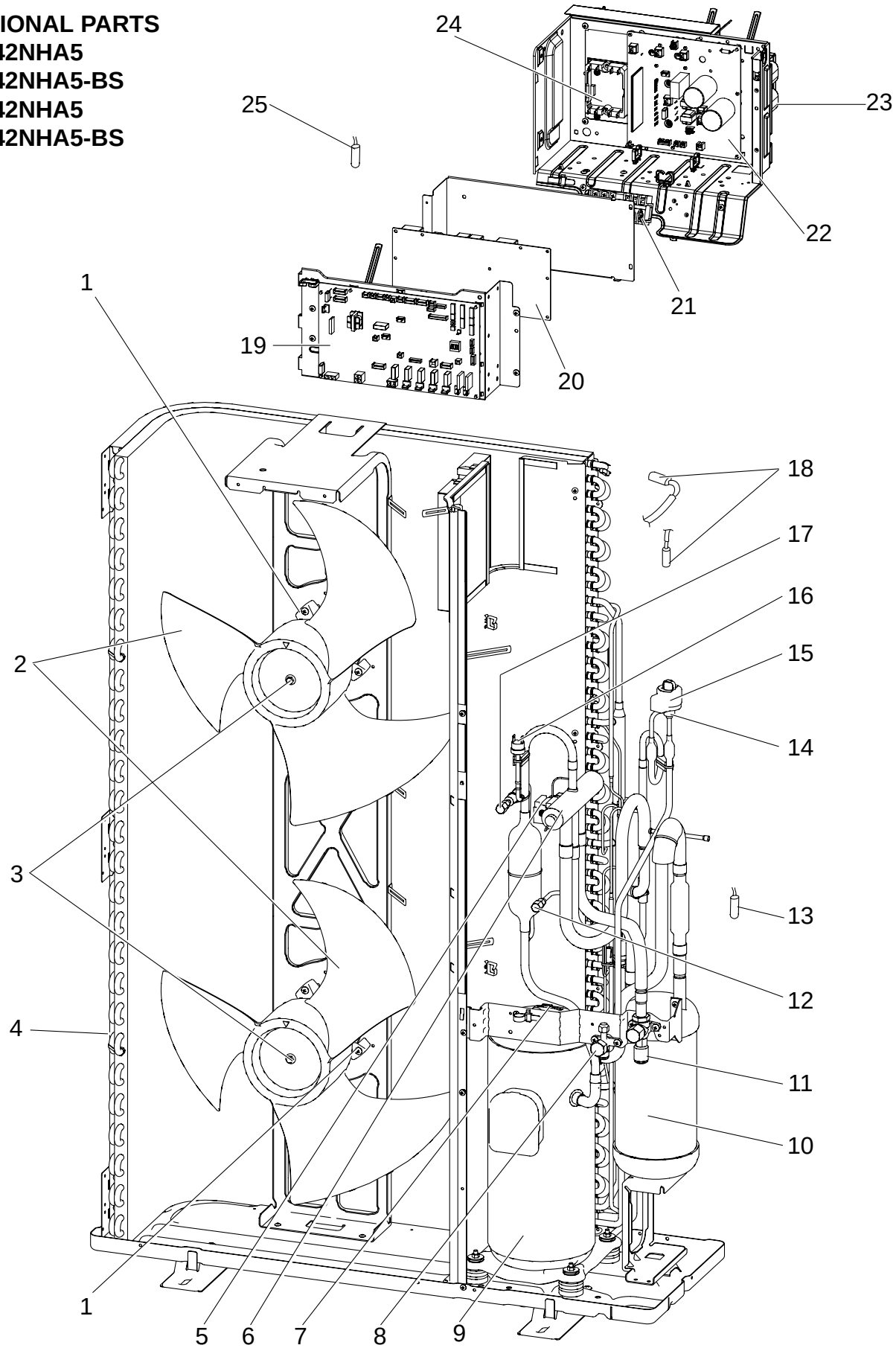

RoHS PARTS LIST

FUNCTIONAL PARTS
PUZ-A42NHA5
PUZ-A42NHA5-BS
PUY-A42NHA5
PUY-A42NHA5-BS

Part numbers that are circled are not shown in the figure.

No.	RoHS	Part No.	Part Name	Specification	Q'ty/set		Remarks (Drawing No.)	Wiring Diagram Symbol	Recom-mended Q'ty
					PUZ-	PUY-			
					A42NHA5 A42NHA5-BS				
1	G	R01 E57 221	FAN MOTOR		2	2		MF1,2	
2	G	R01 E12 115	PROPELLER FAN		2	2			
3	G	R01 E09 097	NUT		2	2			
4	G	T7W E61 408	HEAT EXCHANGER		1	1			
5	G	T7W E21 242	SOLENOID COIL <4-WAY VALVE>		1			21S4	
6	G	T7W E05 403	4-WAY VALVE		1				
7	G	T7W E11 201	THERMISTOR (SHELL)		1	1		TH32	
8	G	T7W E04 410	STOP VALVE	3/8	1	1			
9	G	T97 415 790	COMPRESSOR	ANB33FCTMT Including RUBBER MOUNT	1	1		MC	
10	G	R01 E58 440	ACCUMULATOR		1	1			
11	G	R01 E12 411	BALL VALVE	5/8	1	1			
12	G	R01 E13 413	CHARGE PLUG		1	1			
13	G	R01 H00 202	THERMISTOR (OUTDOOR PIPE)		1	1		TH3	
14	G	R01 H20 401	EXPANSION VALVE		1	1			
15	G	R01 E50 242	LINEAR EXPANSION VALVE COIL		1	1		LEV-A	
16	G	T7W E07 208	HIGH PRESSURE SWITCH		1	1		63H	
17	G	T7W E10 413	CHARGE PLUG		1	1			
18	G	R01 E94 202	THERMISTOR (OUTDOOR 2-PHASE PIPE, OUTDOOR)		1	1		TH6,7	
19	G	T7W F14 315	CONTROLLER CIRCUIT BOARD		1	1		C.B.	
20	G	R01 E18 346	NOISE FILTER CIRCUIT BOARD		1	1		N.F.	
21	G	T7W E40 716	TERMINAL BLOCK	6P(L1,L2,GR,S1,S2,S3)	1	1		TB1	
22	G	R01 E65 313	POWER CIRCUIT BOARD		1	1		P.B.	
23	G	T7W E24 259	REACTOR		1	1		DCL	
24	G	R01 E07 233	ACTIVE FILTER MODULE		1	1		ACTM	
25	G	R01 E99 202	THERMISTOR (HEATSINK)		1	1		TH8	
26	G	R01 E20 254	MAIN SMOOTHING CAPACITOR		1	1		CB	
27	G	R01 E14 239	FUSE	6.3A 250V	4	4		F1,2,3,4	

RoHS PARTS LIST

STRUCTURAL PARTS
PUZ-A42NHA5
PUZ-A42NHA5-BS
PUY-A42NHA5
PUY-A42NHA5-BS

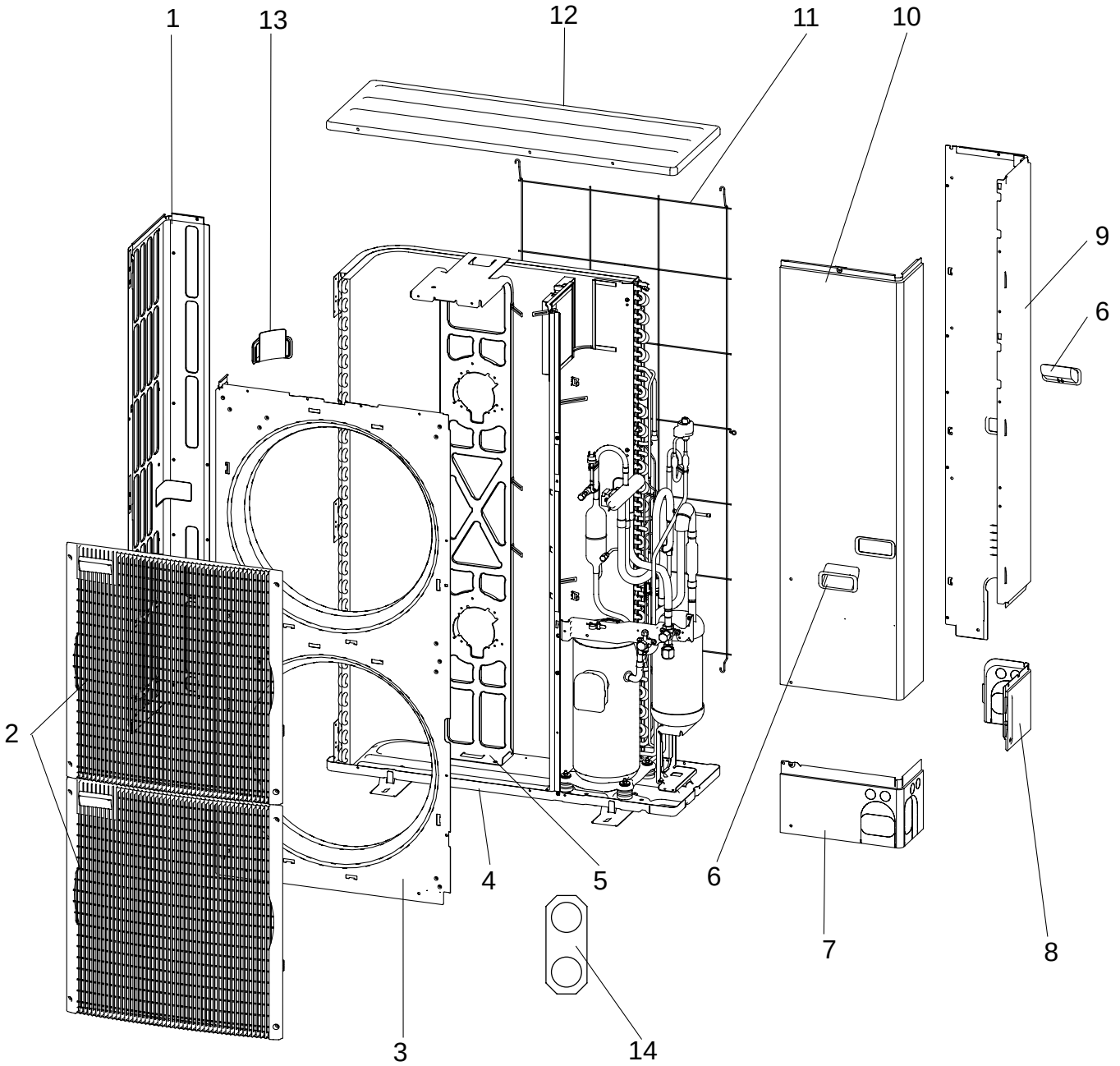

RoHS PARTS LIST

STRUCTURAL PARTS
PUZ-A42NHA5
PUZ-A42NHA5-BS
PUY-A42NHA5
PUY-A42NHA5-BS

No.	RoHS	Part No.	Part Name	Specification	Q'ty/set PUZ-A42NHA5 PUZ-A42NHA5-BS PUY-A42NHA5 PUY-A42NHA5-BS	Remarks (Drawing No.)	Wiring Diagram Symbol	Recom-mended Q'ty
1	G	T7W E03 662	SIDE PANEL (L)		1			
2	G	T7W E03 691	FAN GRILLE		2			
3	G	T7W E02 667	FRONT PANEL		1			
4	G	R01 E26 686	BASE ASSY		1			
5	G	R01 E27 130	MOTOR SUPPORT		1			
6	G	R01 E01 655	HANDLE		2			
7	G	R01 E13 658	COVER PANEL (FRONT)		1			
8	G	R01 E11 658	COVER PANEL (REAR)		1			
9	G	R01 E34 661	SIDE PANEL (R)		1			
10	G	T7W E08 668	SERVICE PANEL		1			
11	G	R01 E07 698	REAR GUARD		1			
12	G	R01 E14 641	TOP PANEL		1			
13	G	R01 E02 655	HANDLE		1			
14	G	T7W E01 617	CONDUIT PLATE		1			

Mr.SLIM™

MITSUBISHI ELECTRIC CORPORATION

HEAD OFFICE : TOKYO BLDG., 2-7-3, MARUNOUCHI, CHIYODA-KU, TOKYO 100-8310, JAPAN

©Copyright 2012 MITSUBISHI ELECTRIC CORPORATION
Distributed in Apr. 2012 No.OCB512
Made in Japan

New publication, effective Apr. 2012
Specifications are subject to change without notice.