MITSUBISHI ELECTRIC

SPLIT-TYPE, HEAT PUMP AIR CONDITIONERS
SPLIT-TYPE, AIR CONDITIONERS

September 2019

No. OCB721

PARTS CATALOG R410A

[Model Name]

PUZ-HA24NHA

[Service Ref.]

PUZ-HA24NHA

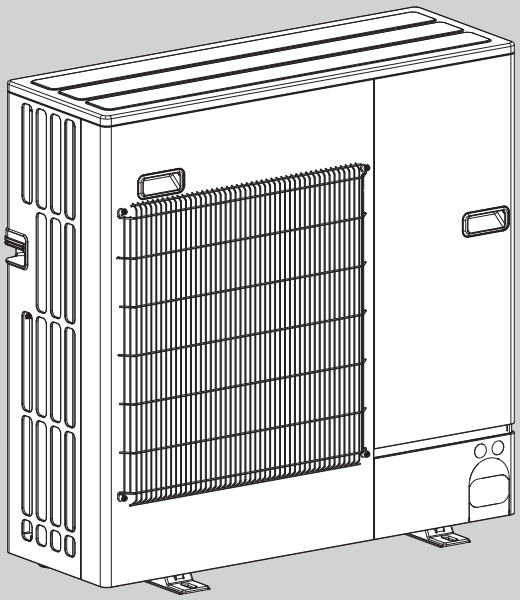

CONTENTS

1. SERVICE PARTS LIST 2

SERVICE MANUAL (OCH721)

Mr.SLIM

1 SERVICE PARTS LIST

PUZ-HA24NHA

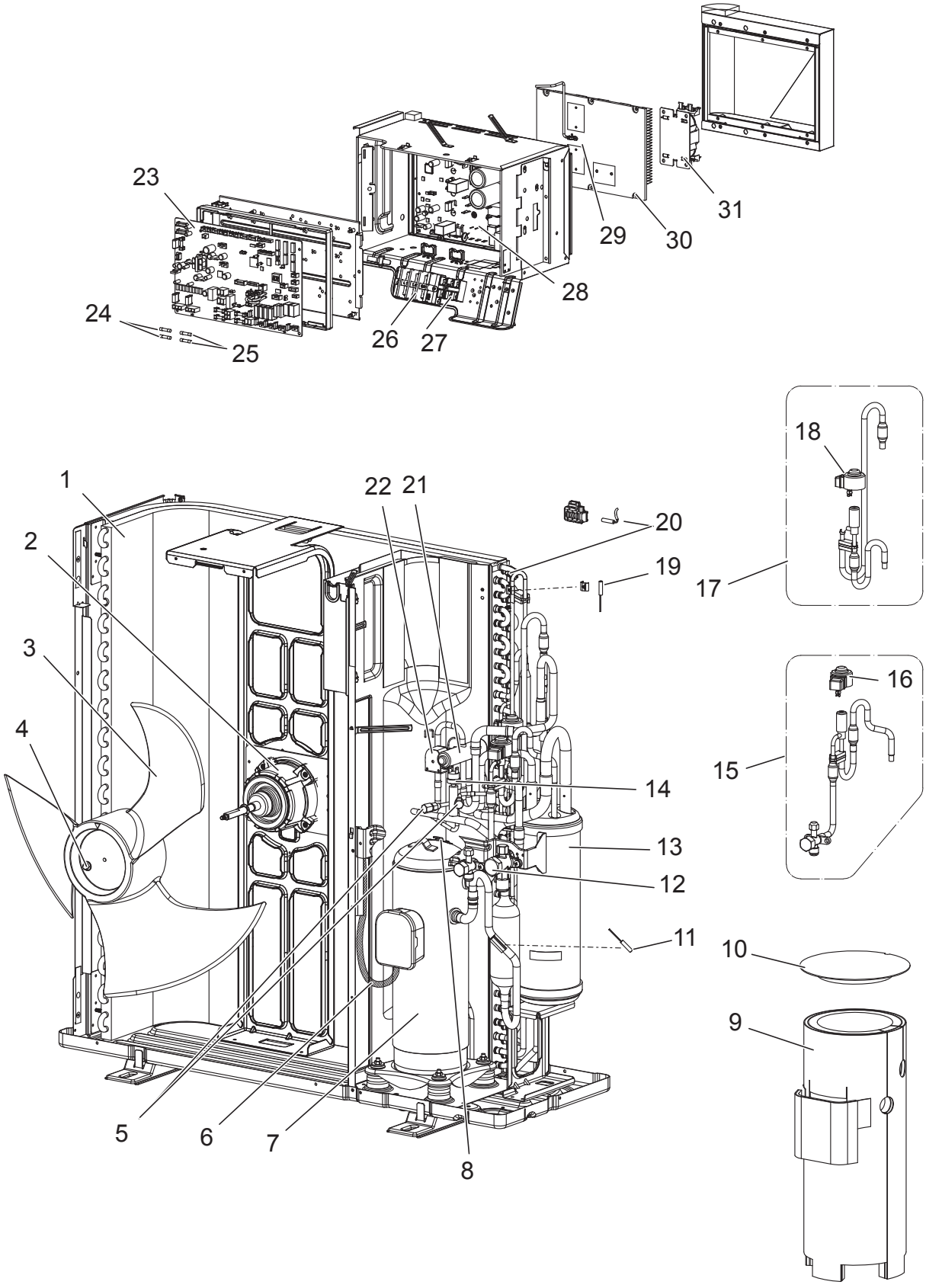

Parts numbers that are circled are not shown in the figure.

No.	Parts No.	Parts Name	Specification	Q'ty/unit PUZ-HA24NHA	Remarks	Wiring Diagram Symbol
1	T7W E84 408	HEAT EXCHANGER		1		
2	R01 E80 221	FAN MOTOR		1		MF1
3	R01 E12 115	PROPELLER FAN		1		
4	R01 E16 097	CAP NUT (MEC) M6		1		
5	R01 E12 413	CHARGE PLUG/LB90		2		
6	T7W C03 510	LEAD ASSY COMP		1		
7	T97 421 427	COMPRESSOR	DNB28FBAMT	1		MC
8	R01 E45 201	THERMISTOR (SHELL)	Comp. Surface	1		TH33
9	T7W B02 602	COMP FELT - DNB/BODY		1		
10	R01 T04 602	COMP FELT - DVB/TOP		1		
11	R01 E22 201	THERMISTOR (DIS)	Discharge	1		TH4
12	T7W E09 410	STOP VALVE 5/8F	5/8	1	Includes STRAINER	
13	R01 E65 440	POWER RECEIVER		1		
14	T7W E15 208	H.P. SWITCH UL4.14MPA		1		63H
15	T7W B05 401	LEV ASSY-B/REC-V		1	Includes LEV-B	LEV-B
16	R01 H49 242	COIL (LEV)/XAP-5P RED		1		LEV-B
17	T7W A05 401	LEV ASSY-A/C-REC		1	Includes LEV-A	LEV-A
18	R01 H18 242	COIL (LEV)/XAP-5P WH		1		LEV-A
19	R01 H87 202	THERMISTOR	Liquid	1		TH3
20	R01 M18 202	THERMISTOR W	2-phase pipe, Ambient	1		TH6, TH7
21	T7W E07 403	4WAY VALVE		1		21S4
22	T7W E92 242	SOLENOID COIL (21S4)		1		21S4
23	T7W S09 315	CONTROLLER BOARD		1		C.B.
24	R01 E21 239	FUSE 10A 250V	10A 250V	2		F1,2
25	R01 E14 239	FUSE 6.3A 250V	6.3A 250V	2		F3,4
26	T7W 603 246	T.B./L1.L2.GR		1		TB1
27	R01 E19 246	T.B./S1.S2.S3		1		TB2
28	T7W S05 323	POWER BOARD		1		P.B.
29	R01 M15 202	THERMISTOR (HS)	Heat sink	1		TH8
30	T7W A04 371	HEAT SINK		1	Includes SCREWS	
31	T7W E27 259	REACTOR		1		DCL

STRUCTURAL PARTS

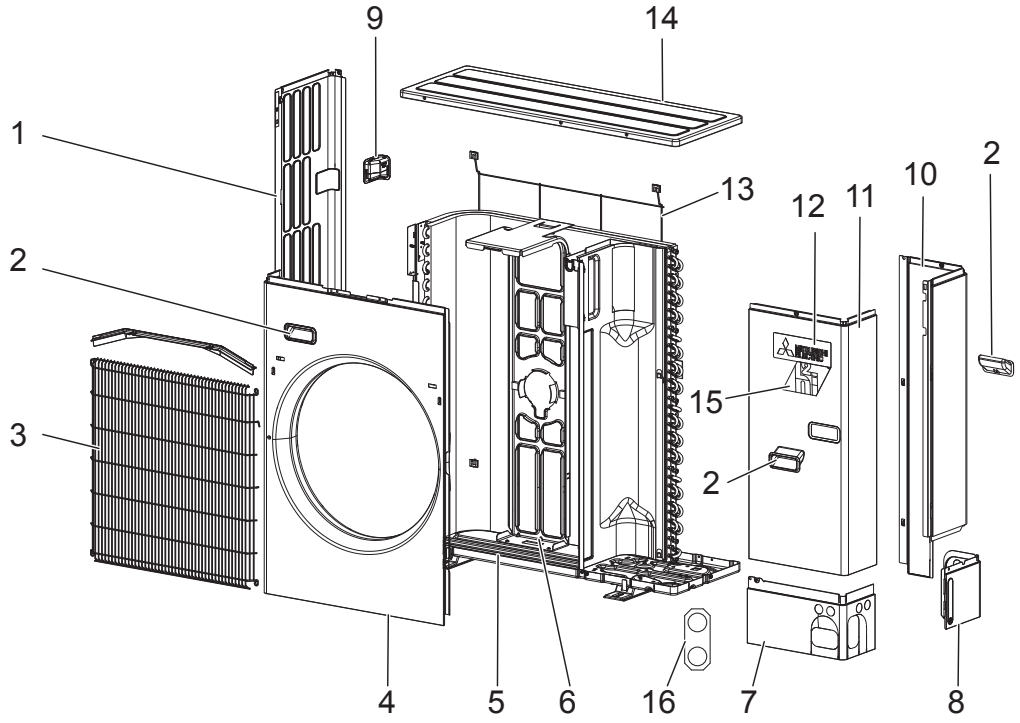

No.	Parts No.	Parts Name	Q'ty/unit PUZ-HA24NHA	Remarks
1	T 7 W E 1 2 6 6 2	SIDE PANEL (L)	1	
2	R 0 1 E 0 1 6 5 5	HANDLE	3	
3	R 0 1 E 7 4 6 9 1	WIRE GRILLE	1	
4	R 0 1 E 2 2 6 6 8	FRONT PANEL	1	
5	T 7 W E 2 8 6 8 6	BASE ASSY	1	
6	T 7 W E 2 0 1 3 0	MOTOR SUPPORT	1	
7	R 0 1 E 4 0 6 5 8	COVER PANEL (FRONT)	1	
8	R 0 1 E 2 4 6 5 8	COVER PANEL (REAR)	1	
9	R 0 1 E 0 6 6 5 5	HANDLE (REAR)	1	
10	T 7 W E 4 1 6 6 1	SIDE PANEL (R)	1	
11	T 7 W E 1 0 6 6 7	SERVICE PANEL	1	
12	T 7 W A 0 0 0 0 5	BRAND LABEL (ME)	1	
13	T 7 W E 0 7 6 9 8	REAR GUARD	1	
14	T 7 W E 1 6 6 4 1	TOP PANEL	1	
15	T 7 W A 1 0 0 0 5	LABEL (H2I)	1	
16	T 7 W E 0 1 6 1 7	CONDUIT PLATE	1	

MITSUBISHI ELECTRIC CORPORATION

HEAD OFFICE: TOKYO BUILDING, 2-7-3, MARUNOUCHI, CHIYODA-KU, TOKYO 100-8310, JAPAN

©Copyright 2019 MITSUBISHI ELECTRIC CORPORATION

Published: Sep. 2019 No. OCB721

Made in Japan

Specifications are subject to change without notice.