SERVICE PARTS LIST FOR MITSUBISHI ELECTRIC PACKAGED AIR-CONDITIONERS

Series : PVA-A•AA4

For use with the R410A

REVISED

Oct. 2015

BWE01433C

INDEX
PVA-A30AA4 PVA-A36AA4 PVA-A42AA4

MITSUBISHI ELECTRIC

Part information update day : 2015/09/30

Please change the old catalog (issued May 2015, No.BWE01433B) to this new catalog.
Content of revision : Some of parts are changed.

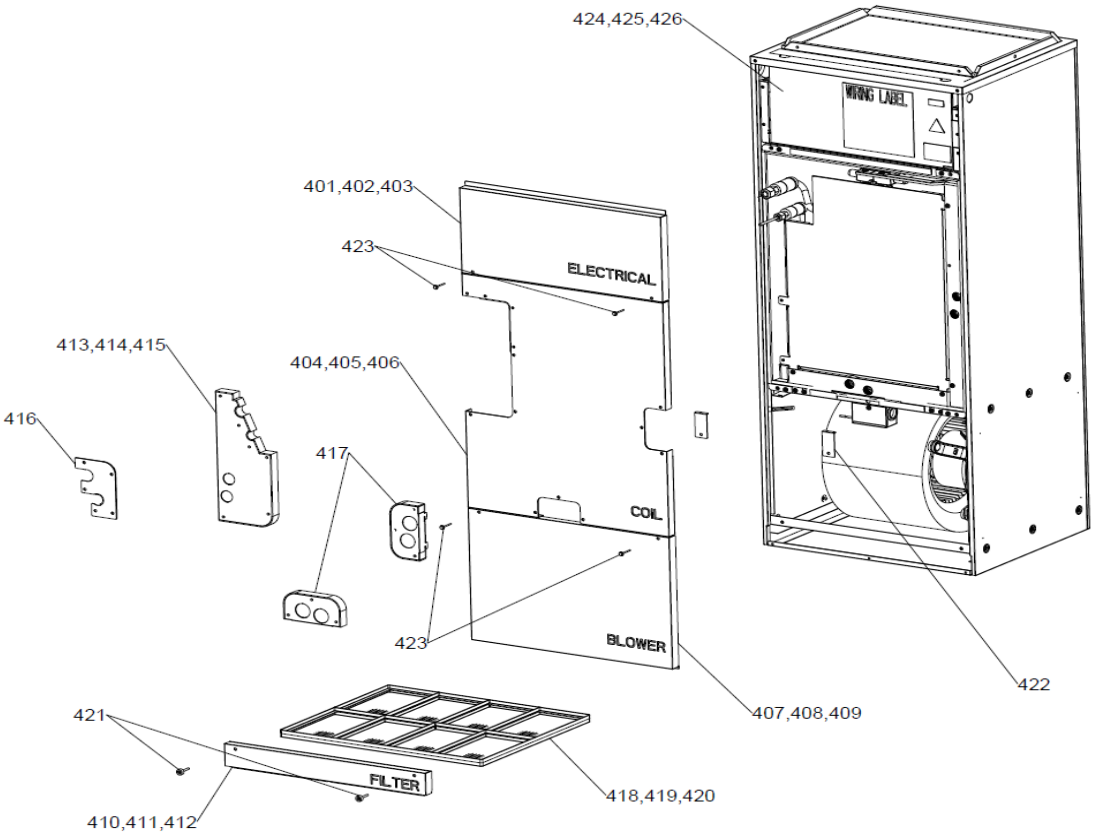
424,425,426
WIRING LABEL
401,402,403
423
ELECTRICAL
413,414,415
404,405,406
416
417
COIL
423
BLOWER
422
407,408,409
421
FILTER
418,419,420
410,411,412

External Parts

No.	Part No.	Part Name	Spec.	PVA-A30	PVA-A36	PVA-A42	Dwg. No.	Notes for models	Revision info.
401		FRONT PANEL ELECTRICAL S					PA00C246G01		
402	U41 002 638	FRONT PANEL ELECTRICAL M		1			PA00C246G02		
403	U41 003 638	FRONT PANEL ELECTRICAL L			1	1	PA00C246G03		
404		FRONT PANEL HEX S					PA00B097G01		
405	U41 002 639	FRONT PANEL HEX M		1			PA00B097G02		
406	U41 003 639	FRONT PANEL HEX L			1	1	PA00B097G03		
407		FRONT PANEL BLOWER S					PA00C247G01		
408	U41 002 637	FRONT PANEL BLOWER M		1			PA00C247G02		
409	U41 003 637	FRONT PANEL BLOWER L			1	1	PA00C247G03		
410		FRONT PANEL FILTER S					PA00C251G01		
411	U41 002 636	FRONT PANEL FILTER M		1			PA00C251G02		
412	U41 003 636	FRONT PANEL FILTER L			1	1	PA00C251G03		
413		PIPE/DRAIN PANEL S					PA00C236G01		
414	U41 002 635	PIPE/DRAIN PANEL M		1			PA00C236G02		
415	U41 003 635	PIPE/DRAIN PANEL L			1	1	PA00C236G03		
416	U41 004 635	PIPE PANEL		1	1	1	PA00D164G01		
417	U41 005 635	DRAIN PANEL		2	2	2	PA00D162G01		
418		FILTER-PLASTIC S					PA35B051G01	16X20	
419	U41 005 500	FILTER-PLASTIC M		1			PA35B052G01	20X20	
420	U41 006 500	FILTER-PLASTIC L			1	1	PA35B053G01	24X20	
421	U41 001 087	PLASTIC THUMBSCREW		2	2	2	PA12D179H01	M5X35	
422	U41 001 086	COIL BRACKET		2	2	2	PA00D163G01		
423	U41 002 087	SCREW M5X40		4	4	4	PA12D177H01		
424		COVER CONTROL BOX S					PA02C150H01		
425	U41 002 812	COVER CONTROL BOX M		1			PA02C141H01		
426	U41 003 812	COVER CONTROL BOX L			1	1	PA02C132H01		

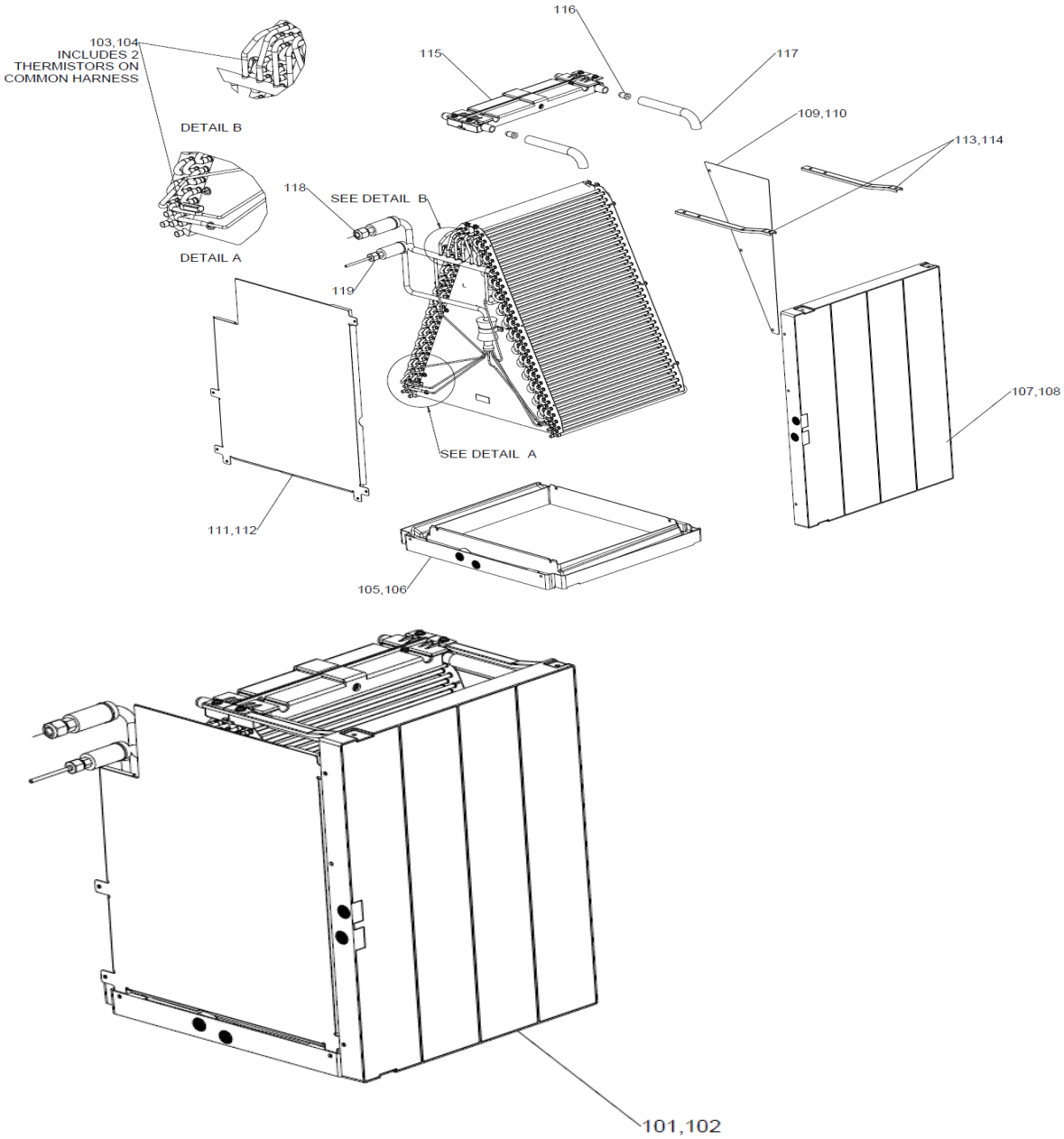
103,104
INCLUDES 2
THERMISTORS ON
COMMON HARNESS
DETAIL B
DETAIL A
116
115
117
109,110
113,114
118
SEE DETAIL B
119
107,108
SEE DETAIL A
111,112
105,106
101,102

Hex Assembly Parts

No.	Part No.	Part Name	Spec.	PVA-A30	PVA-A36	PVA-A42	Dwg. No.	Notes for models	Revision info.
101	U41 016 480	HEAT EXCHANGER A30		1			PA00B101B01	Includes all hex parts	
102	U41 017 480	HEAT EXCHANGER A42			1	1	PA00B102B01	Includes all hex parts	
103	U41 004 200	THERMISTOR		1			KB71B945H06		
104	U41 005 200	THERMISTOR			1	1	KB71B945H07		
105	U41 007 529	DRAIN PAN ASSY LOWER M		1			PA00B098G02		
106	U41 008 529	DRAIN PAN ASSY LOWER L			1	1	PA00B098G03		
107	U41 010 529	DRAIN PAN ASSY SIDE M		1			PA00C248G02		
108	U41 011 529	DRAIN PAN ASSY SIDE L			1	1	PA00C248G03		
109	U41 002 668	PLATE GUIDE REAR M		1			PA00D171G02		
110	U41 003 668	PLATE GUIDE REAR L			1	1	PA00D171G03		
111	U41 005 668	PLATE GUIDE FRONT M		1			PA00C242G02		
112	U41 006 668	PLATE GUIDE FRONT L			1	1	PA00C242G03		
113	U41 002 662	SIDE PAN BRACKET M		2			PA02C078H01		
114	U41 003 662	SIDE PAN BRACKET L			2	2	PA02C079H01		
115	U41 012 529	DRAIN PAN ASSY TOP		2	2	2	PA00C279G01		
116	U41 002 558	PLUG-TOP DRAIN PAN		4	4	4	C126C778H17		
117	U41 001 525	HOSE-TOP DRAIN PAN		2	2	2	PA27D214H02		
118	U41 001 122	NUT FLARE 5/8		1	1	1	BG12S826H03		
119	U41 002 122	NUT FLARE 3/8		1	1	1	Z211A143H06		

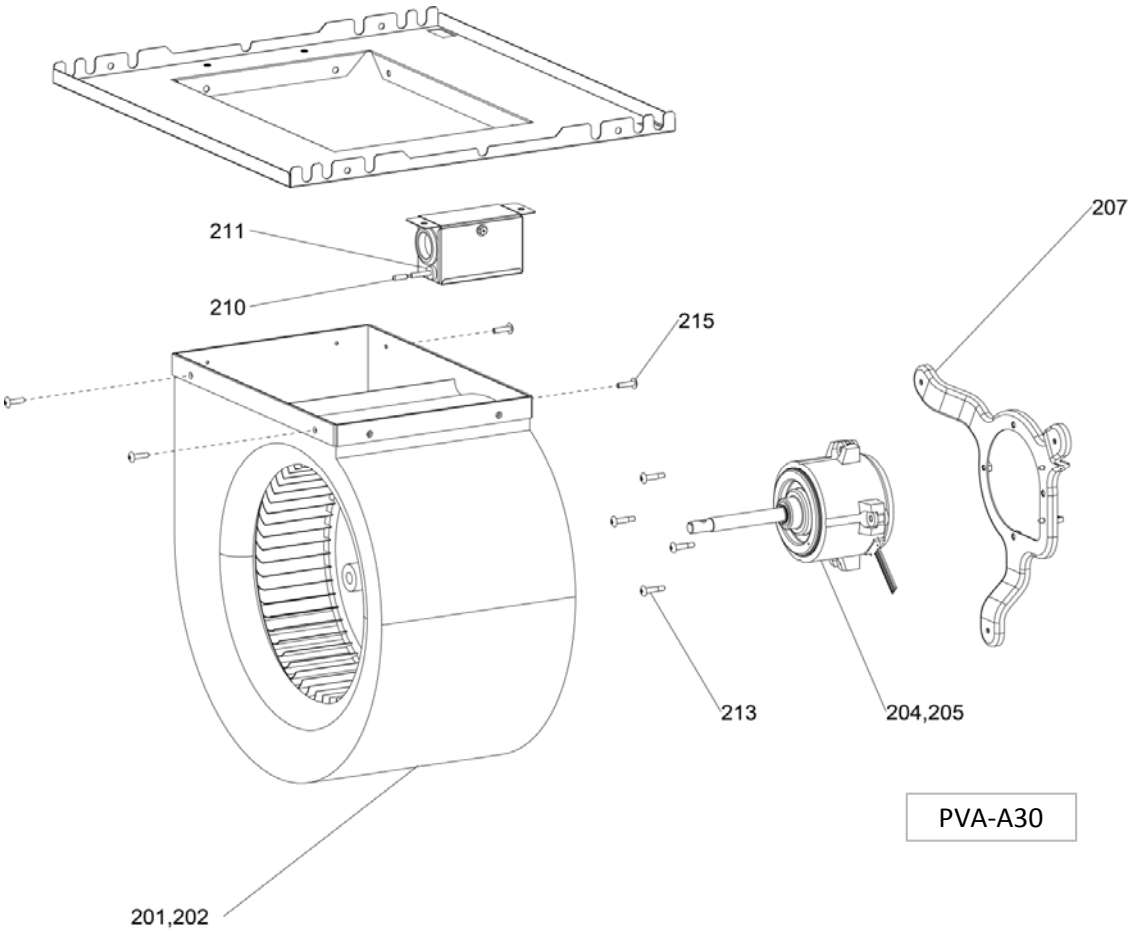

PVA-A30

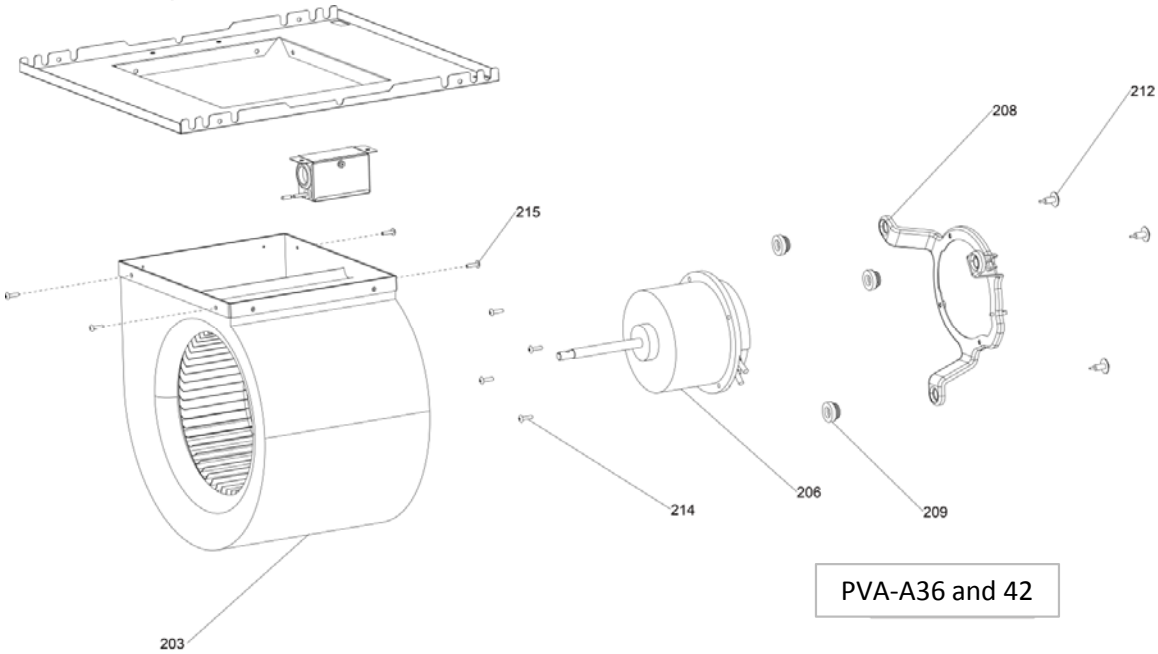

PVA-A36 and 42

Blower Parts

No.	Part No.	Part Name	Spec.	PVA-A30	PVA-A36	PVA-A42	Dwg. No.	Notes for models	Revision info.
201		FAN CASE S					PA00C499G01	INCLUDES NO.215	
202	U41 009 129	FAN CASE M		1			PA00C499G02	INCLUDES NO.215	
203	U41 010 129	FAN CASE L			1	1	PA00C499G03	INCLUDES NO.215	
204		BLOWER MOTOR S					PA61B071H02		
205	U41 004 128	BLOWER MOTOR M		1			PA61B072H02		
206	U41 005 128	BLOWER MOTOR L			1	1	PA61B073H03		
207	U41 001 130	MOTOR BRACKET S M		1			PA00D167G02		
208	U41 002 130	MOTOR BRACKET L			1	1	PA00D168G01		
209	U41 103 104	RUBBER GROMMET			3	3	PA32D195H01		
210	U41 001 287	THERMISTOR RETURN AIR		1	1	1	PA71C160H01		
211	U41 002 104	BUSHING SRB-R-2		1	1	1	KB32K138H01		
212	U41 003 087	SCREW SPECIAL			3	3	PA12D193H01		
213	U41 005 087	BOLT MOTOR (S, M)		4			PA12D178H01		
214	U41 006 087	BOLT MOTOR (L)			4	4	PA12D194H01		
215	U41 007 087	SCRWE M5X20		4	4	4	PA12D247H01		

304
305
S3 S2 S1
2 1
POWER MULTI
306
301
302,303

Control Box Parts

No.	Part No.	Part Name	Spec.	PVA-A30	PVA-A36	PVA-A42	Dwg. No.	Notes for models	Revision info.
301	U41 008 280	PCA ASSY PVA/MVZ		1	1	1	PA95D226G02	INCLUDES NO.306	
302	U41 006 280	PCA BOARD POWER		1			KE95B740F05		Chg.
303	U41 006 281	PCA BOARD POWER			1	1	KE95B740F06		
304	U41 004 246	TERMINAL BLOCK ASSY		1	1	1	BH00C267G02		
305	U41 003 246	TERMINAL BLOCK		1	1	1	BG00R200G62		
306	U41 001 G08	JUMPER CONNECTOR		1	1	1	BB00M192G08	CN4F	

MITSUBISHI ELECTRIC CORPORATION

BWE01433C (20151031)