MITSUBISHI ELECTRIC

Changes for the Better

SPLIT-TYPE, HEAT PUMP AIR CONDITIONERS

2015

R410A

SERVICE MANUAL

Series PVA

Model name

<Indoor unit>

PVA-A30AA4

PVA-A36AA4

PVA-A42AA4

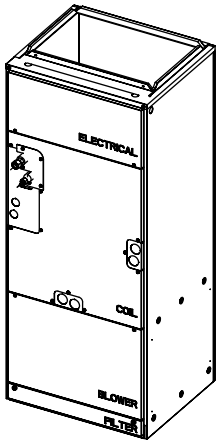

INDOOR UNIT

Mr.SLIM™

CONTENTS

1. SAFETY PRECAUTION 2
2. PART NAMES AND FUNCTIONS 3
3. SPECIFICATION 4
4. FAN PERFORMANCE AND CORRECTED AIR FLOW 6
5. SOUND PRESSURE LEVELS 10
6. OUTLINES & DIMENSIONS 12
7. WIRING DIAGRAM 14
8. REFRIGERANT SYSTEM DIAGRAM 15
9. HEATER CONTROL 16
10. HUMIDIFIER CONTROL 19
11. ERV (ENERGY RECOVERY VENTILATION) CONTROL 20
12. TROUBLESHOOTING 21
13. DISASSEMBLY PROCEDURE 34

1 SAFETY PRECAUTION

1-1. ALWAYS OBSERVE FOR SAFETY

Before obtaining access to terminal, all supply circuits must be disconnected.

1-2. CAUTIONS RELATED TO NEW REFRIGERANT

Cautions for units utilising refrigerant R410A

Use new refrigerant pipes.

In case of using the existing pipes for R22, be careful with the followings.
· For A36 and A42, be sure to perform replacement operation before test run.
· Change flare nut to the one provided with this product. Use a newly flared pipe.
· Avoid using thin pipes.

**Make sure that the inside and outside of refrigerant piping is clean and it has no contamination such as sulfur hazardous for use, oxides, dirt, shaving particles, etc.
In addition, use pipes with specified thickness.**

Contamination inside refrigerant piping can cause deterioration of refrigerant oil etc.

Store the piping to be used indoors during installation and both ends of the piping sealed until just before brazing. (Leave elbow joints, etc. in their packaging.)

If dirt, dust or moisture enters into refrigerant cycle, that can cause deterioration of refrigerant oil or malfunction of compressor.

Use ester oil, ether oil or alkylbenzene oil (small amount) as the refrigerant oil applied to flares and flange connections.

If large amount of mineral oil enters, that can cause deterioration of refrigerant oil etc.

Charge refrigerant from liquid phase of gas cylinder.

If the refrigerant is charged from gas phase, composition change may occur in refrigerant and the efficiency will be lowered.

Do not use refrigerant other than R410A.

If other refrigerant (R22 etc.) is used, chlorine in refrigerant can cause deterioration of refrigerant oil etc.

Use a vacuum pump with a reverse flow check valve.

Vacuum pump oil may flow back into refrigerant cycle and that can cause deterioration of refrigerant oil etc.

Use the following tools specifically designed for use with R410A refrigerant.

The following tools are necessary to use R410A refrigerant.

Tools for R410A	
Gauge manifold	Flare tool
Charge hose	Size adjustment gauge
Gas leak detector	Vacuum pump adaptor
Torque wrench	Electronic refrigerant charging scale

Handle tools with care.

If dirt, dust or moisture enters into refrigerant cycle, that can cause deterioration of refrigerant oil or malfunction of compressor.

Do not use a charging cylinder.

If a charging cylinder is used, the composition of refrigerant will change and the efficiency will be lowered.

Ventilate the room if refrigerant leaks during operation. If refrigerant comes into contact with a flame, poisonous gases will be released.

[1] Cautions for service

(1) Perform service after recovering the refrigerant left in unit completely.
(2) Do not release refrigerant in the air.
(3) After completing service, charge the cycle with specified amount of refrigerant.
**(4) When performing service, install a filter drier simultaneously.
Be sure to use a filter drier for new refrigerant.**

[2] Additional refrigerant charge

When charging directly from cylinder

· Check that cylinder for R410A on the market is syphon type.
· Charging should be performed with the cylinder of syphon stood vertically. (Refrigerant is charged from liquid phase.)

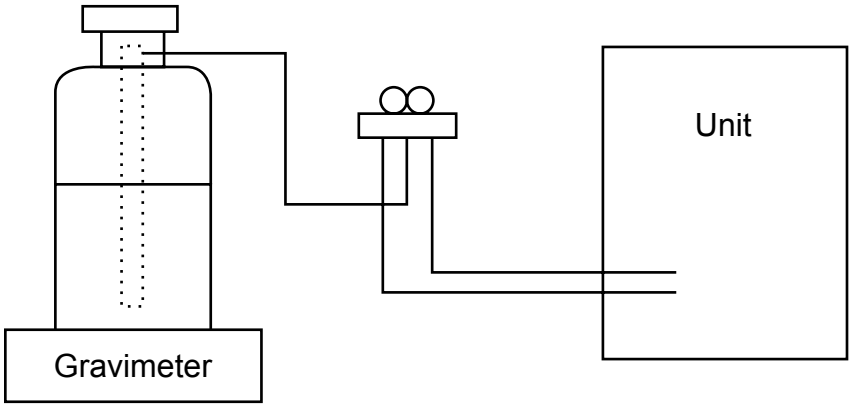

[3] Service tools

Use the below service tools as exclusive tools for R410A refrigerant.

No.	Tool name	Specifications
①	Gauge manifold	· Only for R410A
		· Use the existing fitting specifications. (UNF1/2)
		· Use high-tension side pressure of 5.3MPa·G or over.
②	Charge hose	· Only for R410A
		· Use pressure performance of 5.09MPa·G or over.
③	Electronic scale	——
④	Gas leak detector	· Use the detector for R134a, R407C or R410A.
⑤	Adaptor for reverse flow check	· Attach on vacuum pump.
⑥	Refrigerant charge base	——
⑦	Refrigerant cylinder	· Only for R410A · Top of cylinder (Pink) · Cylinder with syphon
⑧	Refrigerant recovery equipment	——

2 PART NAMES AND FUNCTIONS

• Indoor Unit

(1)Vertical

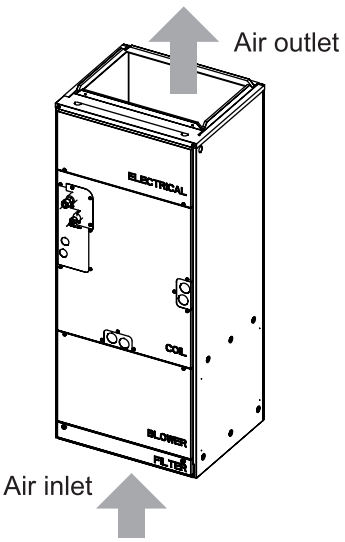

(2)Horizontal Right

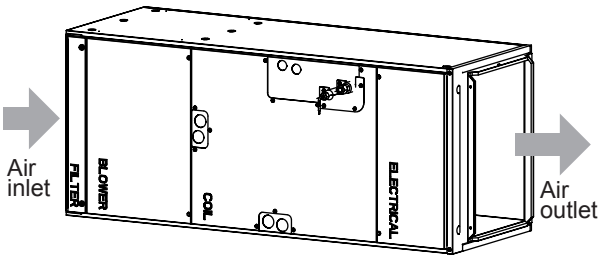

(3)Horizontal left

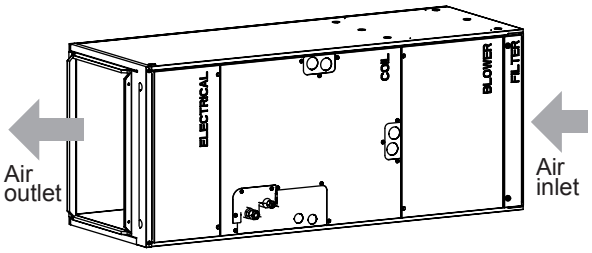

(4)Down flow

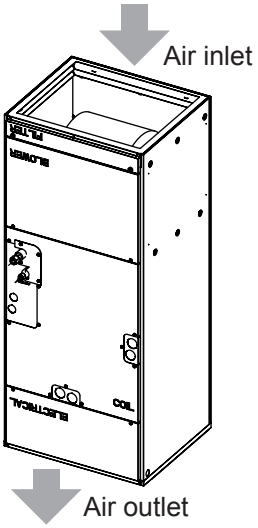

3 SPECIFICATION

INDOOR UNIT	Service Ref.			**PVA-A30AA4**
	Power supply (phase, cycle, voltage)			1 phase, 60Hz, 208/230V
		Max. Fuse Size	A	15
		Min. Circuit Ampacity	A	4.13
	External finish			Galvanized steel cabinet - Powder coated Slate Gray
	Heat exchanger			Plate fin coil
	Fan	Fan (drive) × No.		Sirocco fan × 1
		Fan motor output	kW	0.121
		Fan motor	F.L.A	3.3
		Airflow (Low-Mid-High)	m^3/min (CFM)	17.3-21.1-24.8 (613-744-875)
		External static pressure	Pa (in.WG)	75-125-200 (0.30-0.50-0.80)
	Operation control & Thermostat			Remote controller & built-in
	Sound pressure level (Low-Mid-High)	75Pa (0.30 in.WG)	dB (A)	30-34-38
		125Pa (0.50 in.WG)		32-36-40
		200Pa (0.80 in.WG)		35-39-43
	Drain pipe		mm (in.)	19.05 (3/4) FPT
	Dimensions	W	mm (in.)	534 (21)
		D	mm (in.)	548 (21-5/8)
		H	mm (in.)	1378 (54-1/4)
	Weight		kg (lbs)	64 (141)

INDOOR UNIT	Service Ref.			**PVA-A36AA4**
	Power supply (phase, cycle, voltage)			1 phase, 60Hz, 208/230V
		Max. Fuse Size	A	15
		Min. Circuit Ampacity	A	5.50
	External finish			Galvanized Steel Cabinet - Powder coated Slate Gray
	Heat exchanger			Plate fin coil
	Fan	Fan (drive) × No.		Sirocco fan × 1
		Fan motor output	kW	0.430
		Fan motor	F.L.A	4.40
		Airflow (Low-Mid-High)	m^3/min (CFM)	22.3-27.1-31.9 (788-956-1125)
		External static pressure	Pa (in.WG)	75-125-200 (0.30-0.50-0.80)
	Operation control & Thermostat			Remote controller & built-in
	Sound pressure level (Low-Mid-High)	75Pa (0.30 in.WG)	dB (A)	30-34-38
		125Pa (0.50 in.WG)		32-36-40
		200Pa (0.80 in.WG)		37-41-45
	Drain pipe		mm (in.)	19.05 (3/4) FPT
	Dimensions	W	mm (in.)	635 (25)
		D	mm (in.)	548 (21-5/8)
		H	mm (in.)	1511 (59-1/2)
	Weight		kg (lbs)	78 (172)

INDOOR UNIT	Service Ref.			**PVA-A42AA4**
	Power supply (phase, cycle, voltage)			1 phase, 60Hz, 208/230V
		Max. Fuse Size	A	15
		Min. Circuit Ampacity	A	5.63
	External finish			Galvanized Steel Cabinet - Powder coated Slate Gray
	Heat exchanger			Plate fin coil
	Fan	Fan (drive) × No.		Sirocco fan × 1
		Fan motor output	kW	0.430
		Fan motor	F.L.A	4.50
		Airflow (Low-Mid-High)	m^3/min (CFM)	29.4-35.7-42.0 (1040-1262-1485)
		External static pressure	Pa (in.WG)	75-125-200 (0.30-0.50-0.80)
	Operation control & Thermostat			Remote controller & built-in
	Sound pressure level (Low-Mid-High)	75Pa (0.30 in.WG)	dB (A)	34-38-42
		125Pa (0.50 in.WG)		36-40-44
		200Pa (0.80 in.WG)		39-43-47
	Drain pipe		mm (in.)	19.05 (3/4) FPT
	Dimensions	W	mm (in.)	635 (25)
		D	mm (in.)	548 (21-5/8)
		H	mm (in.)	1511 (59-1/2)
	Weight		kg (lbs)	78 (172)

4 FAN PERFORMANCE AND CORRECTED AIR FLOW

PVA-A30AA4

• Vertical, Horizontal Right, Horizontal Left

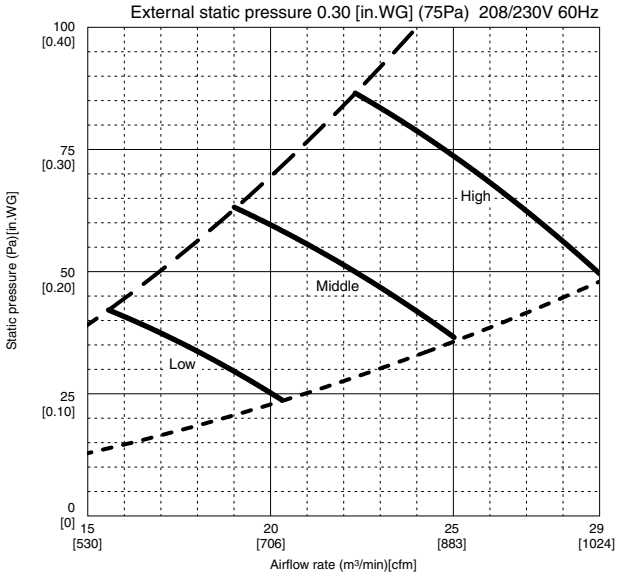

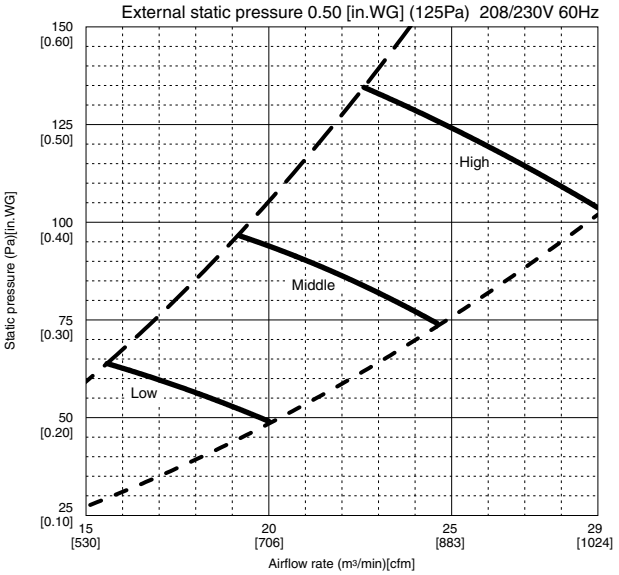

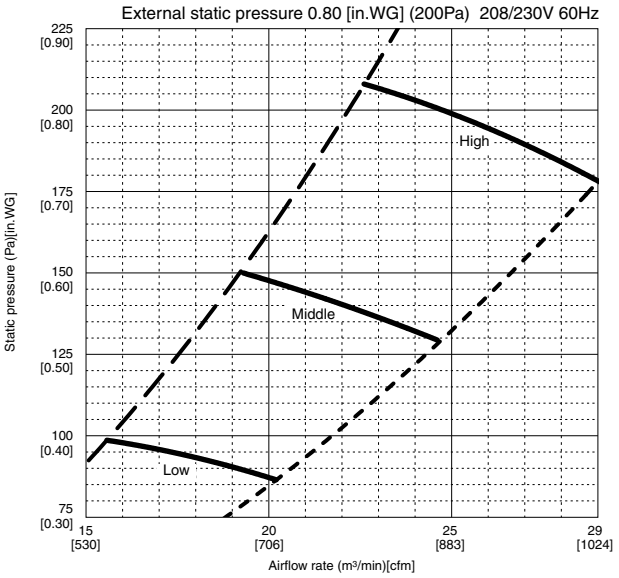

• Downflow

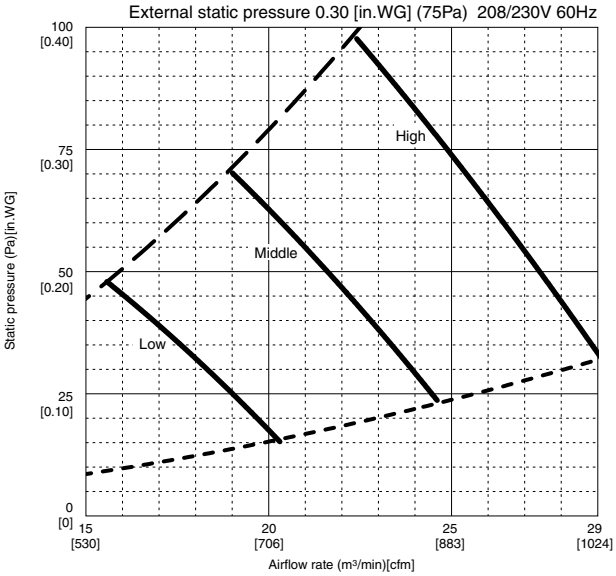

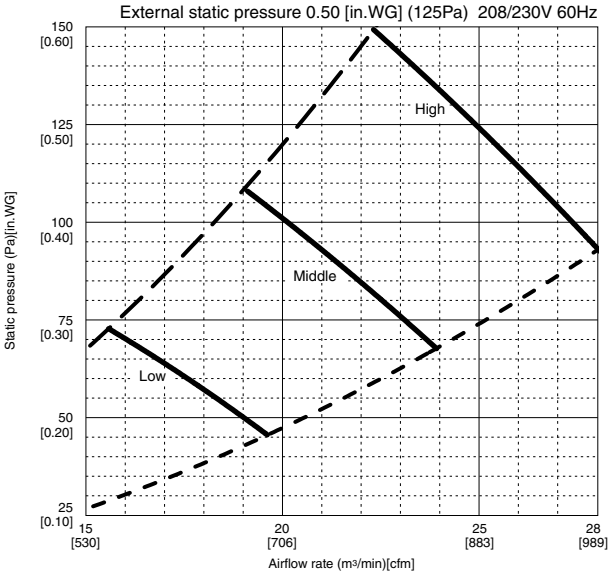

PVA-A36AA4

• Vertical, Horizontal Right, Horizontal Left

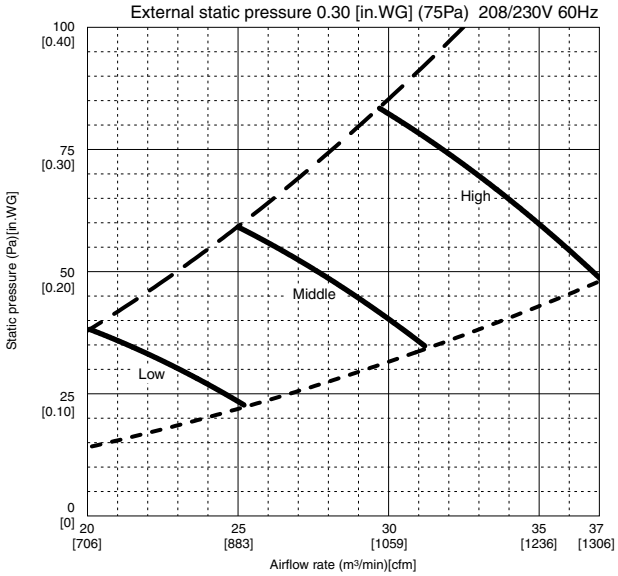

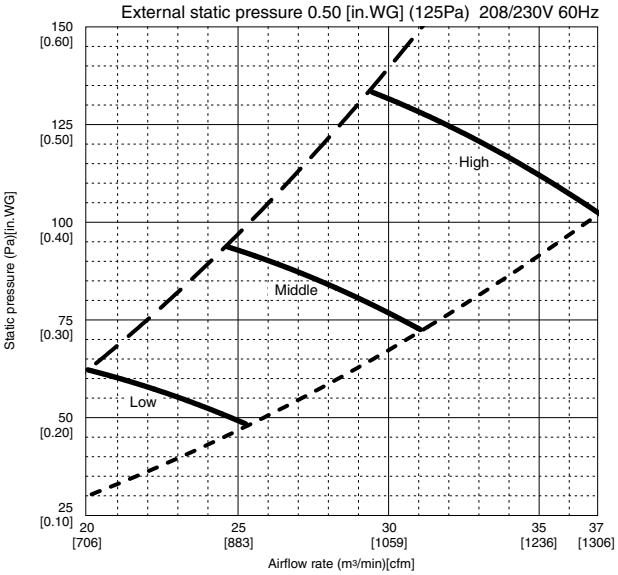

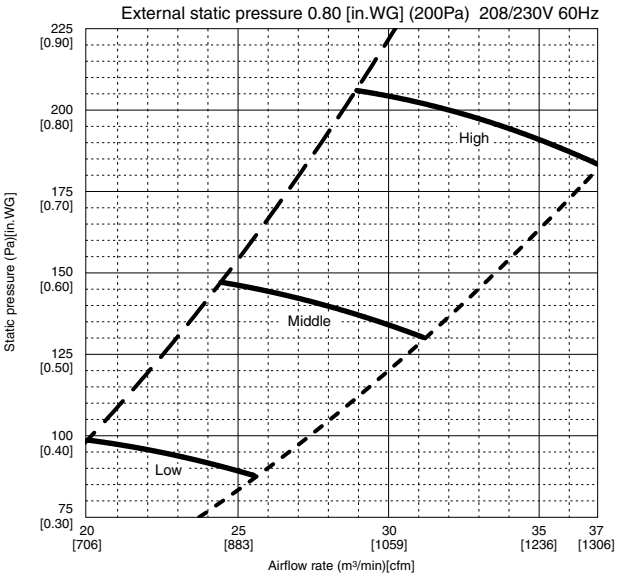

• Downflow

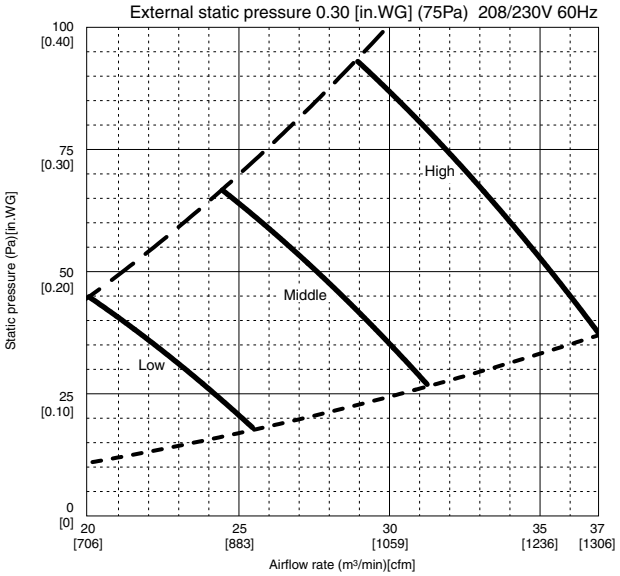

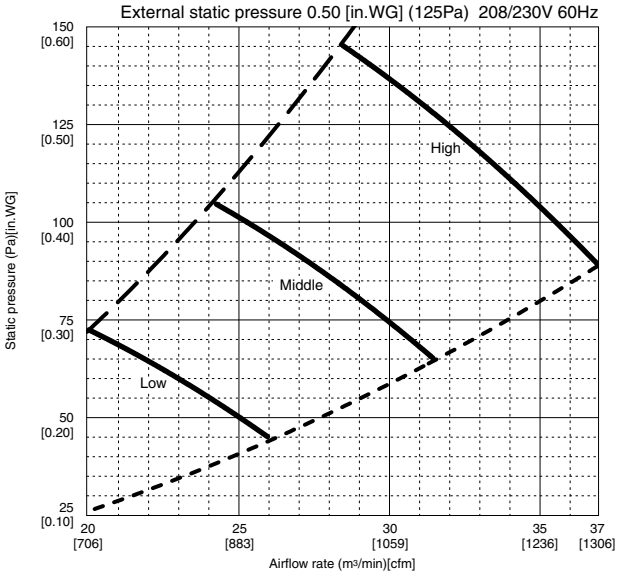

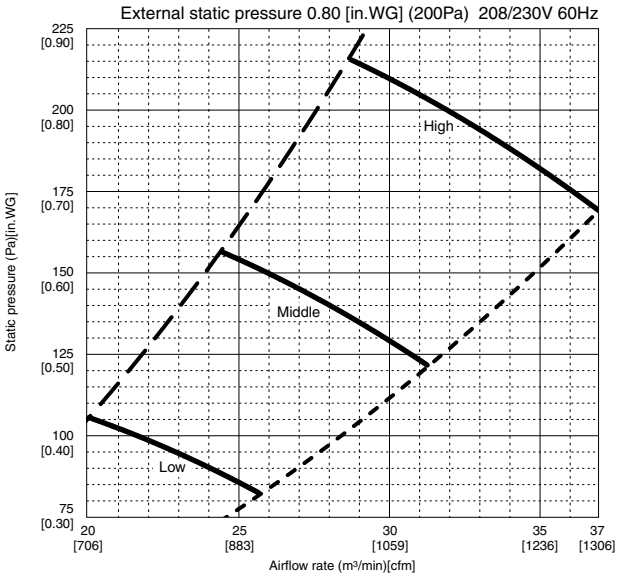

PVA-A42AA4

• Vertical, Horizontal Right, Horizontal Left

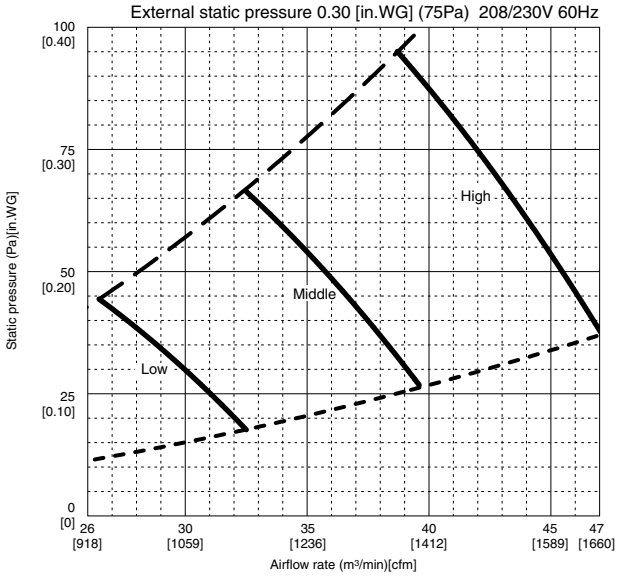

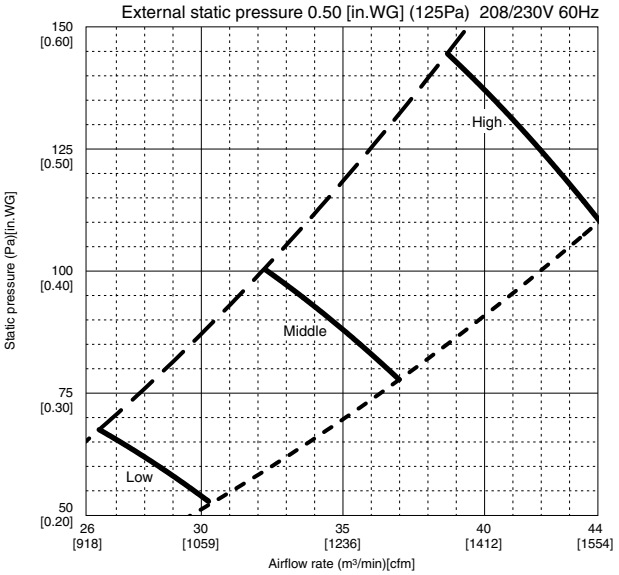

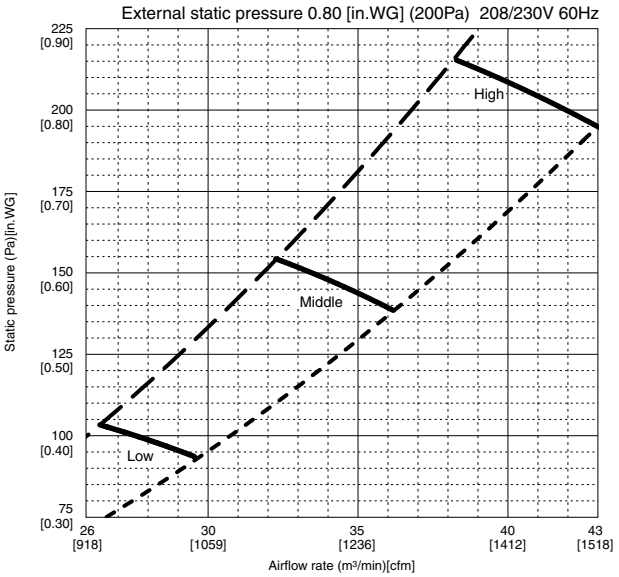

• Downflow

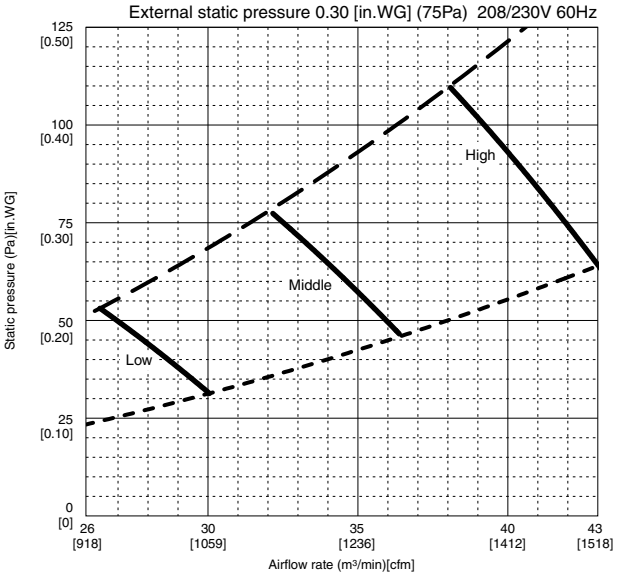

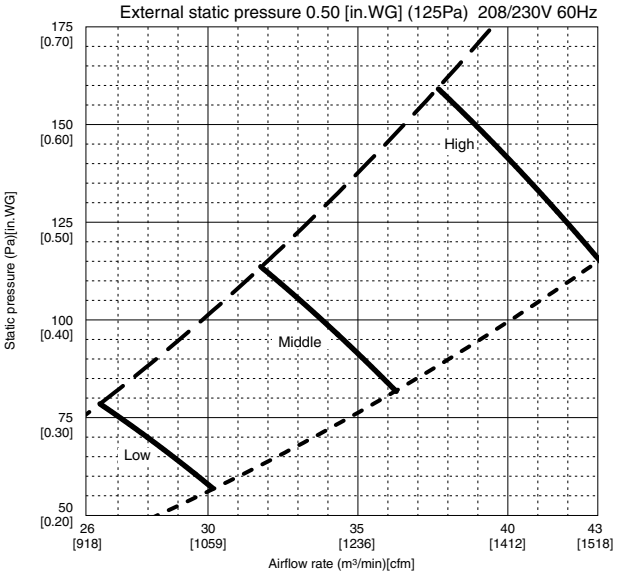

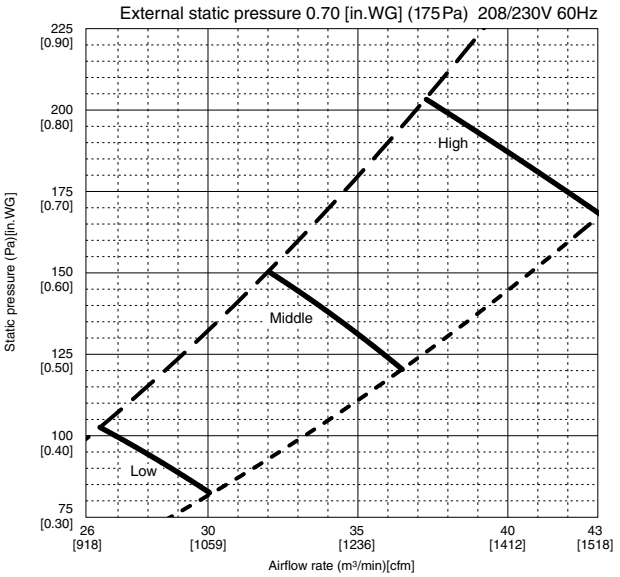

PVA-A30, 36, 42AA4

Air filter

Power source: 208/230V 60Hz

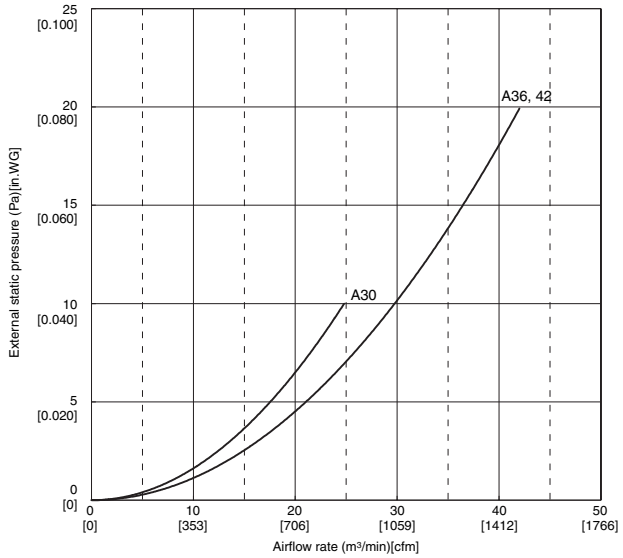

5 SOUND PRESSURE LEVELS

5-1. Sound pressure level

Ceiling concealed

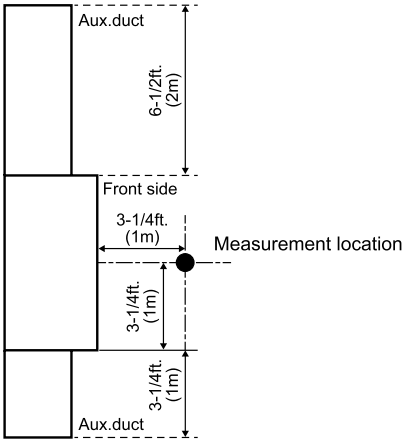

5-2. NC curves

PVA-A30AA4

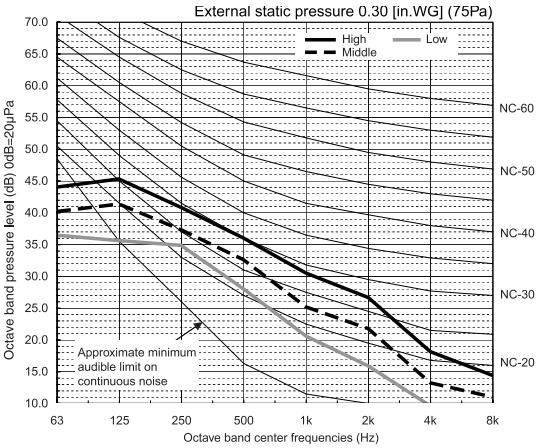

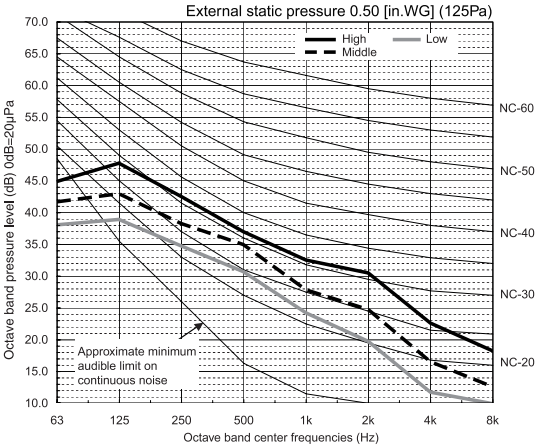

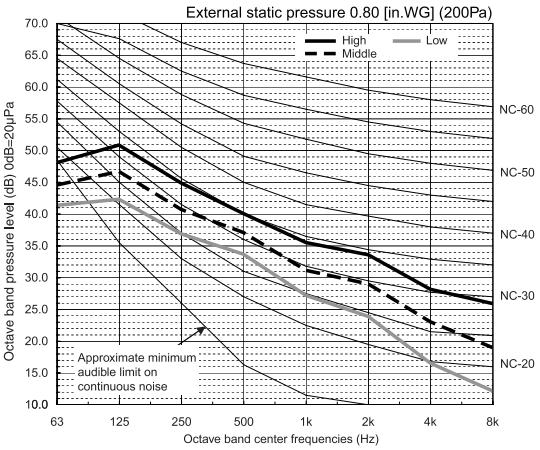

PVA-A36AA4

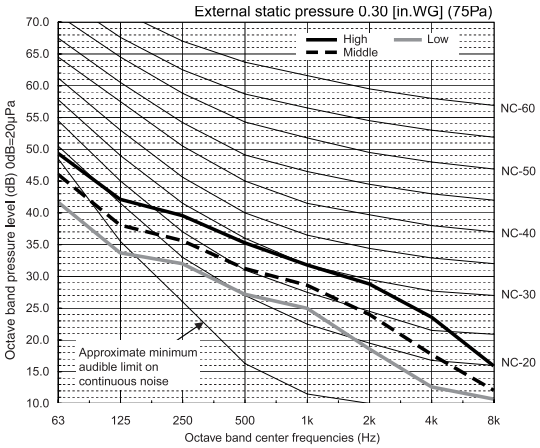

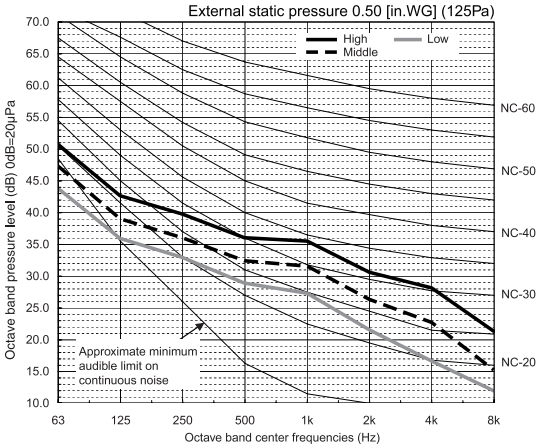

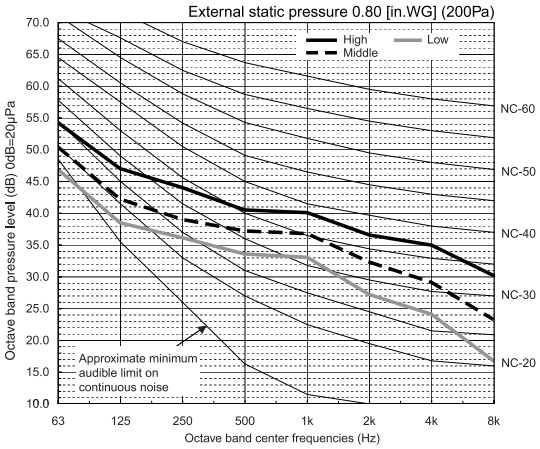

PVA-A42AA4

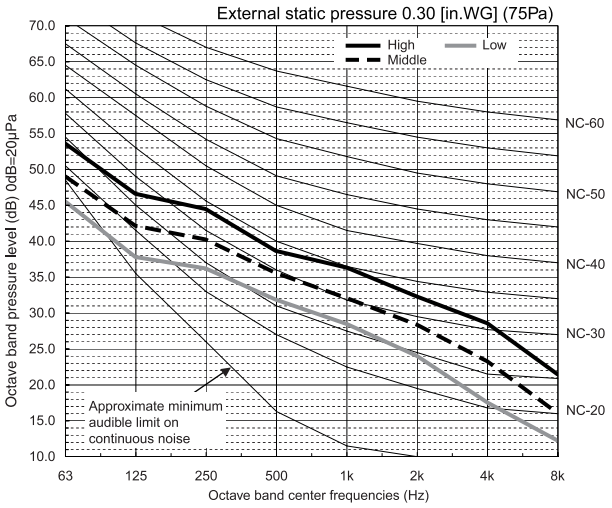
External static pressure 0.30 [in.WG] (75Pa)
High
Middle
Low
NC-60
NC-50
NC-40
NC-30
NC-20
Approximate minimum audible limit on continuous noise
Octave band pressure level (dB) 0dB=20μPa
Octave band center frequencies (Hz)
70.0
65.0
60.0
55.0
50.0
45.0
40.0
35.0
30.0
25.0
20.0
15.0
10.0
63
125
250
500
1k
2k
4k
8k

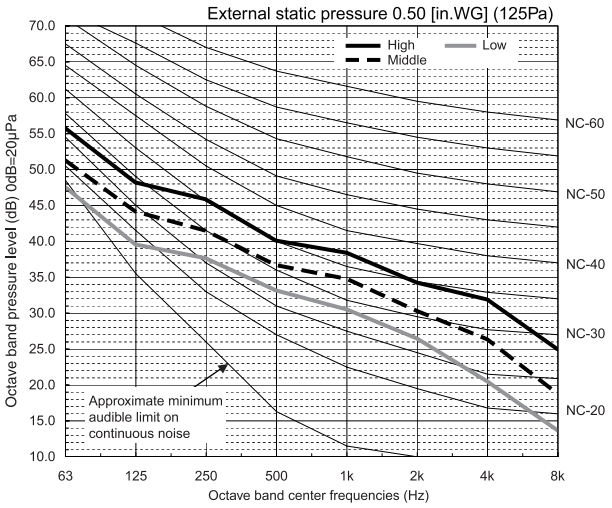
External static pressure 0.50 [in.WG] (125Pa)
High
Middle
Low
NC-60
NC-50
NC-40
NC-30
NC-20
Approximate minimum audible limit on continuous noise
Octave band pressure level (dB) 0dB=20μPa
Octave band center frequencies (Hz)
70.0
65.0
60.0
55.0
50.0
45.0
40.0
35.0
30.0
25.0
20.0
15.0
10.0
63
125
250
500
1k
2k
4k
8k

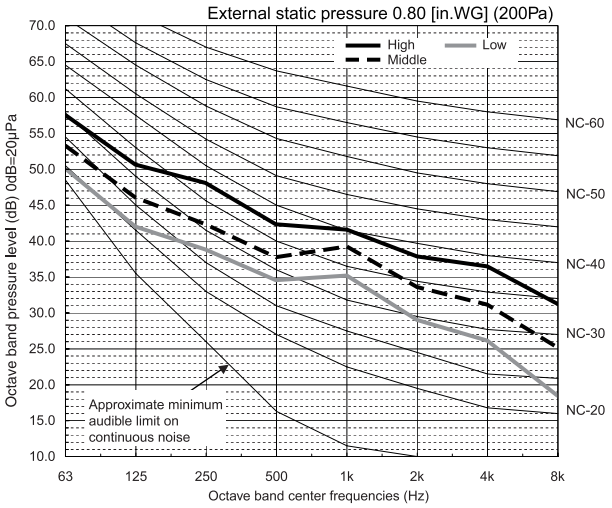
External static pressure 0.80 [in.WG] (200Pa)
High
Middle
Low
NC-60
NC-50
NC-40
NC-30
NC-20
Approximate minimum audible limit on continuous noise
Octave band pressure level (dB) 0dB=20μPa
Octave band center frequencies (Hz)
70.0
65.0
60.0
55.0
50.0
45.0
40.0
35.0
30.0
25.0
20.0
15.0
10.0
63
125
250
500
1k
2k
4k
8k

6 OUTLINES & DIMENSIONS

INDOOR UNIT

PVA-A30, 36, 42AA4

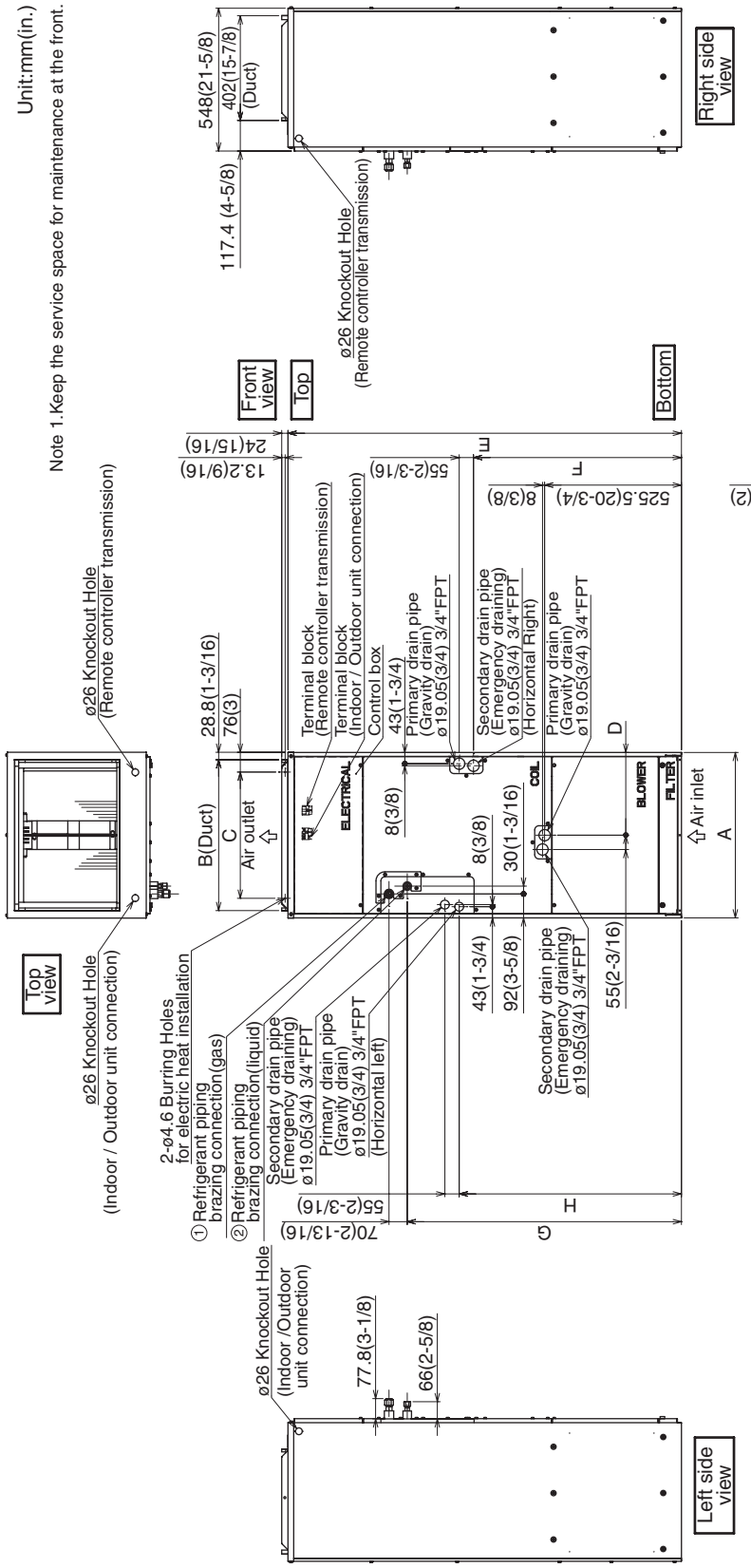

Model	③Nominal Filter size	Duct Connection
PVA-A30AA4	508X508X25.4 (20X20X1)	477X402 (18-13/16X15-7/8)
PVA-A36AA4 PVA-A42AA4	508X609.6X25.4 (20X24X1)	579X402 (22-13/16X15-7/8)

Model	A	B	C	D	E	F	G	H	J	①Gas pipe	②Liquid pipe
PVA-A30AA4	534 (21)	477 (18-13/16)	382.6 (15-1/8)	266.5 (10-1/2)	1378 (54-1/4)	737 (29-1/16)	953.5 (37-9/16)	792 (31-3/16)	461 (18-3/16)	Ø15.88 (5/8)	Ø9.52 (3/8)
PVA-A36AA4	635 (25)	579 (22-13/16)	484.6 (19-1/8)	317.5 (12-1/2)	1511 (59-1/2)	798.5 (31-7/16)	1053 (41-1/2)	853.5 (33-5/8)	563 (22-3/16)		
PVA-A42AA4											

Clearance Area

Unit:mm(in.)

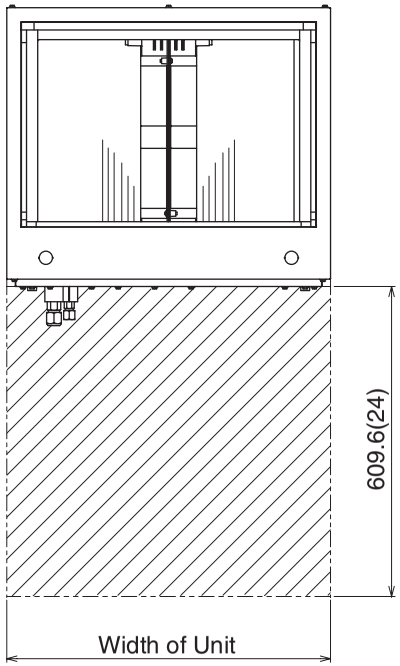

Vertical Installation

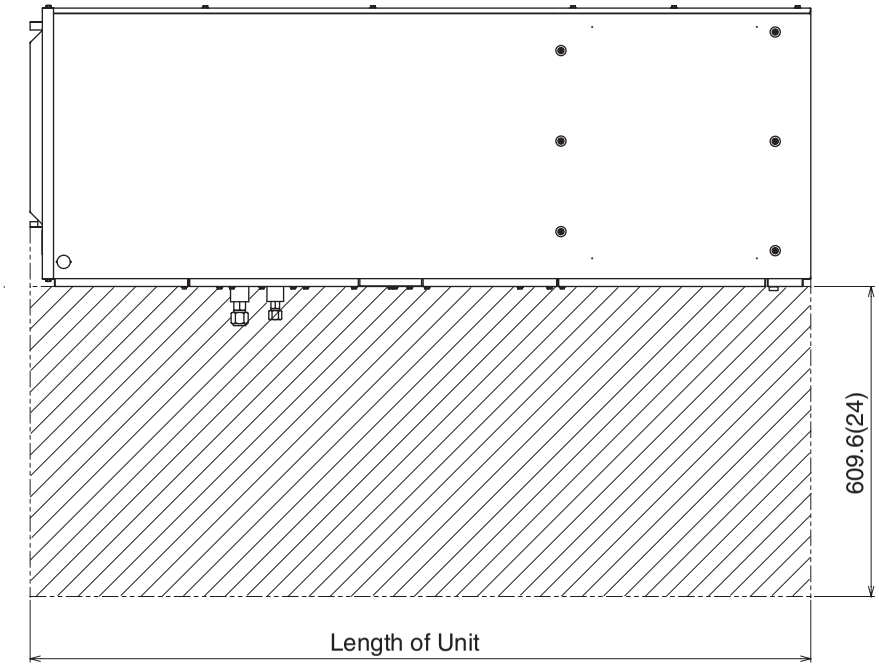

Horizontal Installation

7 WIRING DIAGRAM

PVA-A30, 36, 42AA4

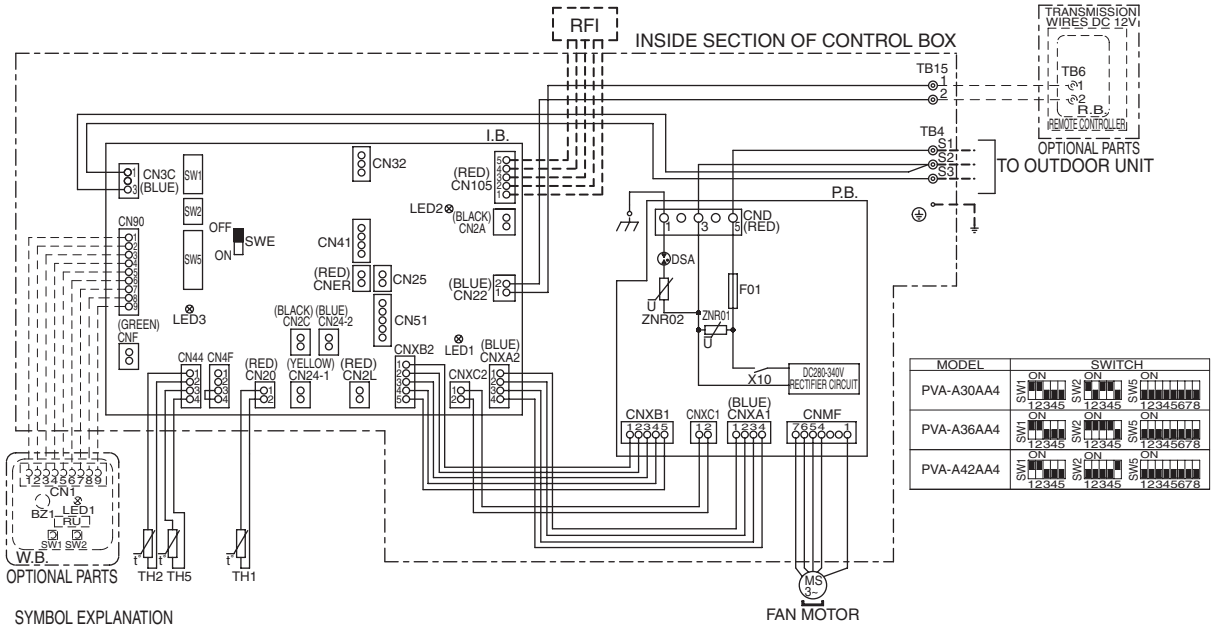

MODEL	SWITCH		
PVA-A30AA4	SW1 ON 12345	SW2 ON 12345	SW5 ON 12345678
PVA-A36AA4	SW1 ON 12345	SW2 ON 12345	SW5 ON 12345678
PVA-A42AA4	SW1 ON 12345	SW2 ON 12345	SW5 ON 12345678

SYMBOL EXPLANATION

SYMBOL	NAME
I.B.	INDOOR CONTROLLER BOARD
CN24-1	CONNECTOR (HEATER CONTROL 1ST)
CN24-2	CONNECTOR (HEATER CONTROL 2ND)
CN25	CONNECTOR (HUMIDITY OUTPUT)
CN2A	CONNECTOR (0-10V ANALOG INPUT)
CN2C	CONNECTOR (ERV OUTPUT)
CN2L	CONNECTOR (LOSSNAY)
CN32	CONNECTOR (REMOTE SWITCH)
CN41	CONNECTOR (HA TERMINAL-A)
CN51	CONNECTOR (CENTRALLY CONTROL)
CN90	CONNECTOR (WIRELESS)
CN105	CONNECTOR(RADIO FREQUENCY INTERFACE)
CNER	CONNECTOR (ERV INPUT)
CNF	CONNECTOR (HUMIDITY INPUT)
LED1	LED(POWER SUPPLY)
LED2	LED(REMOTE CONTROLLER SUPPLY)
LED3	LED(TRANSMISSION INDOOR-OUTDOOR)

SYMBOL	NAME
I.B.	INDOOR CONTROLLER BOARD
SW1	SWITCH (FOR MODEL SELECTION)
SW2	SWITCH (FOR CAPACITY CODE)
SW5	SWITCH (FOR MODE SELECTION)
SWE	CONNECTOR (EMERGENCY OPERATION)
P.B.	POWER SUPPLY BOARD
F01	FUSE AC250V 6.3A
ZNR01,02	VARISTOR
DSA	ARRESTOR
X10	AUX. RELAY
TH1	INTAKE AIR TEMP. THERMISTOR
TH2	PIPE TEMP. THERMISTOR/LIQUID
TH5	COND./EVA.TEMP. THERMISTOR
TB4	TERMINAL BLOCK (INDOOR/OUTDOOR CONNECTING LINE)
TB15	TERMINAL BLOCK (REMOTE CONTROLLER TRANSMISSION LINE)
RFI	RADIO FREQUENCY INTERFACE FOR RF THERMOSTAT

SYMBOL	NAME
OPTIONAL PARTS	
W.B.	IR WIRELESS REMOTE CONTROLLER BOARD
RU	RECEIVING UNIT
BZ1	BUZZER
LED1	LED(RUN INDICATOR)
SW1	SWITCH(HEATING ON/OFF)
SW2	SWITCH(COOLING ON/OFF)
R.B.	WIRED REMOTE CONTROLLER BOARD
TB6	TERMINAL BLOCK (REMOTE CONTROLLER TRANSMISSION LINE)

Note1.Since the outdoor side electric wiring may change be sure to check the outdoor unit electric wiring for servicing.
2.Indoor and outdoor connecting wires are made with polarities,make wiring matching terminal numbers (S1,S2,S3).
3.Symbols used in wiring diagram above are as follows.
:CONNECTOR
:TERMINAL
(HEAVY DOTTED LINE):FIELD WIRING
(THIN DOTTED LINE):OPTIONAL PARTS
4.Use copper supply wire.
UTILISER DES FILS D'ALIMENTATION EN CUIVRE.

8 REFRIGERANT SYSTEM DIAGRAM

PVA-A30, 36, 42AA4

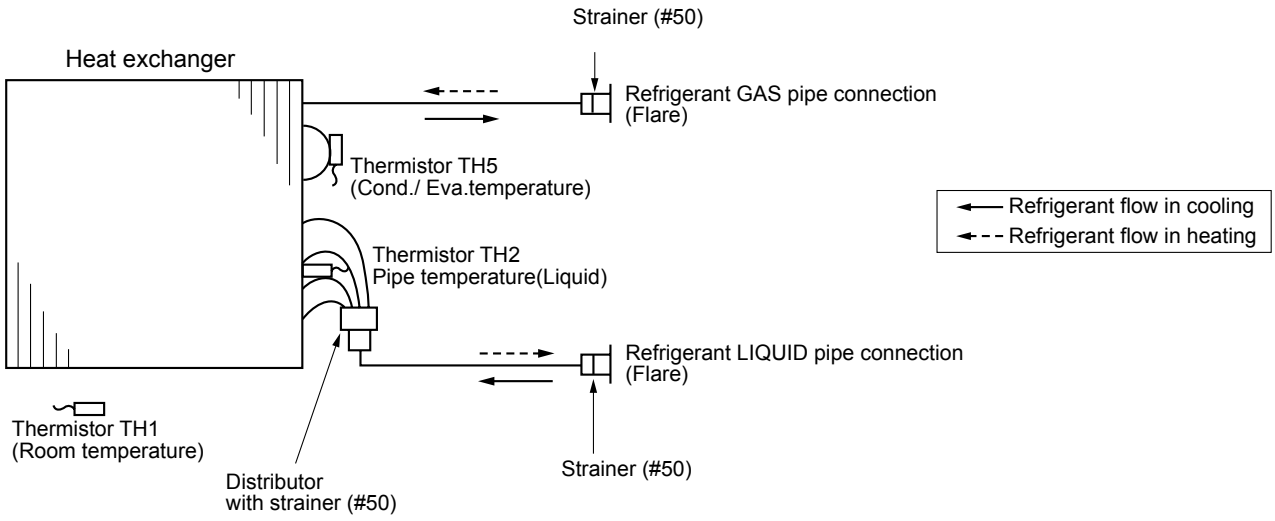

9 HEATER CONTROL

9-1. CONTROL SPECIFICATIONS AND FUNCTION SETTING

- Table 1 shows how the field-installed heater is controlled. Select the desired pattern in the table below, and set the Function on the indoor units as shown in Table 1.

Table.1 [Function table]
Select unit numbers 01 to 03 or all units (AL [wired remote controller] / 07 [IR wireless remote controller])

Mode	Setting			Mode (function) No. Wired remote controller (RF thermostat) 23 (123)	11 (111)	Initial setting
Heater control	Enable heater basic control	1st	Heater OFF Inlet air temp.≥ set temp. Heater ON Inlet air temp.< set temp. -4.5°F(2.5°C) · The fan will stop and the heater will turn off when [DEFROST] or [ERROR] is displayed. 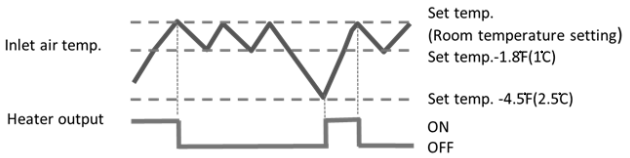	1	–	–
	Enable heater comfort mode	1st	Heater OFF Inlet air temp. ≥ set temp. Heater ON Inlet air temp.< set temp. -1.8°F(1°C) · The fan will stop and the heater will turn off when [DEFROST] is displayed. 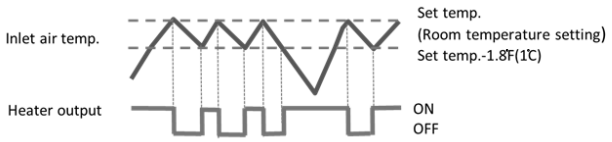	2	1	○
		2nd	Heater OFF Inlet air temp. ≥set temp. Heater ON Inlet air temp.< set temp. -2.7°F(1.5°C) · The fan will stop and the heater will turn off when [DEFROST] is displayed. 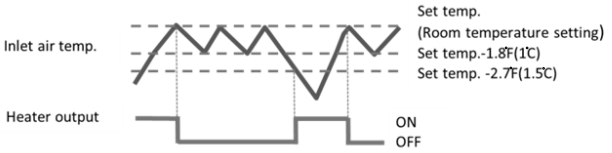			
	Enable heater economy mode	1st	Heater OFF Inlet air temp. ≥set temp.-1.8°F(1°C) Heater ON Inlet air temp.< set temp. -3.6°F(2°C) · The fan will stop and the heater will turn off when [DEFROST] is displayed. 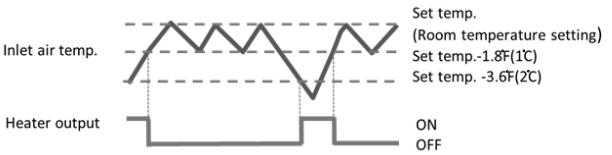	2	2	–
		2nd	Inlet air temp.≥ set temp.-1.8°F(1°C) Heater ON Inlet air temp.< set temp. -4.5°F(2.5°C) · The fan will stop and the heater will turn off when [DEFROST] is displayed. 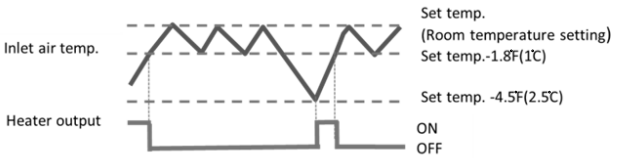			

1st: Heater output from CN24-1(yellow) on the indoor unit control board
2nd: Heater output from CN24-2(blue) on the indoor unit control board
*Refer to the Installation Manual for function settings

9-2. FAN CONTROL

By setting the Mode No. 23 in the Function Table in section 9-1, the following patterns of fan control will become possible.

Fan control patterns

CN4Y for FAN control (PAC-YU25HT)	Mode(function) No.23(123)	Fan in defrost	Fan(All modes other than defrost)	Factory setting
Disabled (CN4Y cannot be used with this unit)	1	STOP(Heater OFF)	Set(Heater ON*2)	-
	2	STOP(Heater OFF)	High*1(Heater ON*2)	○

*1 While the heater is on, the fan will operate at high speed regardless of the fan setting on the remote controller.
*2 While the heater output is on in the Function Table in section 9-1, the heater will be ON except when the unit is in communication error, return air thermistor error and motor error.

*** If a heater is installed in the duct, do not use Panel heater connector. By doing so, the fan will turn off when the heater is on, which may result in fire.**

9-3. PAC-YU25HT (OPTIONAL PARTS) INSTALLATION

The following section describes installation of the External Heater Adapter that connects to PVA-A·AA4 series indoor unit. This products is the special wiring parts to drive an electric heater with the air conditioner.

(1) Parts list

♦Check that the following parts are included in the package.

1) External output cable (with a yellow connector).....2 in total
Two types of cables with different connectors are included.

2) Panel heater connector..... 3 in total
White: 1
Green: 2 (2 types)
*Panel heater connectors cannot be used with this unit.

(2) Connection to the indoor unit

♦Use the cables that fit the connectors on the indoor unit control board.

1) External output cable (with a yellow connector)
This cable is used to connect a relay circuit for an interlocked operation with either an electric or a panel heater. Select the heater output pattern (1st = CN24-1 or 2nd = CN24-2) to use, and connect the cable to the connector on the indoor unit control board that corresponds to the selection.

(3) Locally procured wiring

- A basic connection method is shown below.

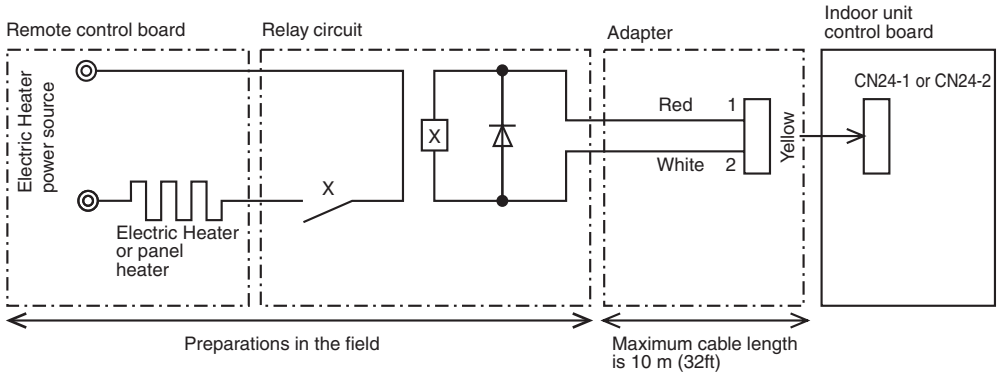

- For relay X use the specifications given below Operation coil
  Rated voltage: 12VDC
  Power consumption: 0.9W or less
  * Use the diode that is recommended by the relay manufacturer at both ends of the relay coil.
- The length of the electrical wiring for the PAC-YU25HT is 2 meters (6-1/2 ft.)
- To extend this length, use sheathed 2-core cable.
  Control cable type: CVV, CVS, CPEV or equivalent.
  Cable size: 0.5 mm^2 ~ 1.25 mm^2 (16 to 22 AWG)
  Don't extend the cable more than 10 meters (32ft)

Recommended circuit

Wiring diagram

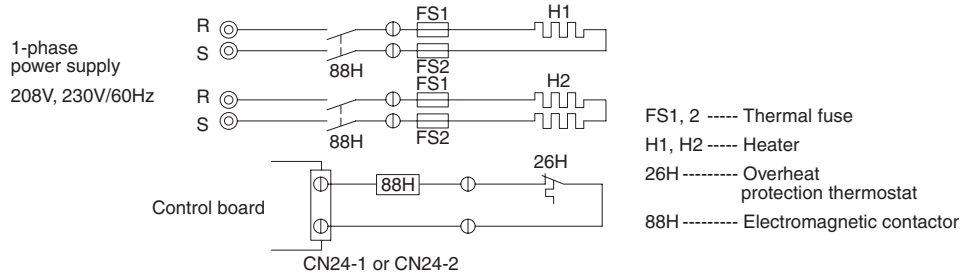

(4) Wiring restrictions

- Keep the length of the cable connecting to the circuit board of the indoor unit shorter than 10 meters (32ft).
- Longer than 10 meters (32ft) could cause improper operation.
- Use a transit relay when extending wiring such as remote wiring.

10 HUMIDIFIER CONTROL

10-1. CONTROL SPECIFICATIONS

The below table shows how the field installed humidifier and fan speed is controlled.

Mode (function) No. Wired remote controller (RF thermostat)		Humidistat output	Condition (no defrost/no error)	CN25 output	Fan speed
13 (113)	16 (116)	CNF input			
2	1	OFF	Heat operation & Thermo OFF	OFF	RC setting
			Heat operation & Thermo ON		
		ON	Heat operation & Thermo OFF	OFF	RC setting
			Heat operation & Thermo ON	ON	High
	2	OFF	Heat operation & Thermo OFF	OFF	RC setting
			Heat operation & Thermo ON		
		ON	Heat operation & Thermo OFF	ON	High
			Heat operation & Thermo ON		
-		-	Except for heat operation	OFF	RC setting

RC:Remote controller
The fan continues to run for 30 seconds after the humidifier stops.

10-2. INSTALLATION

A basic connection method is shown below.

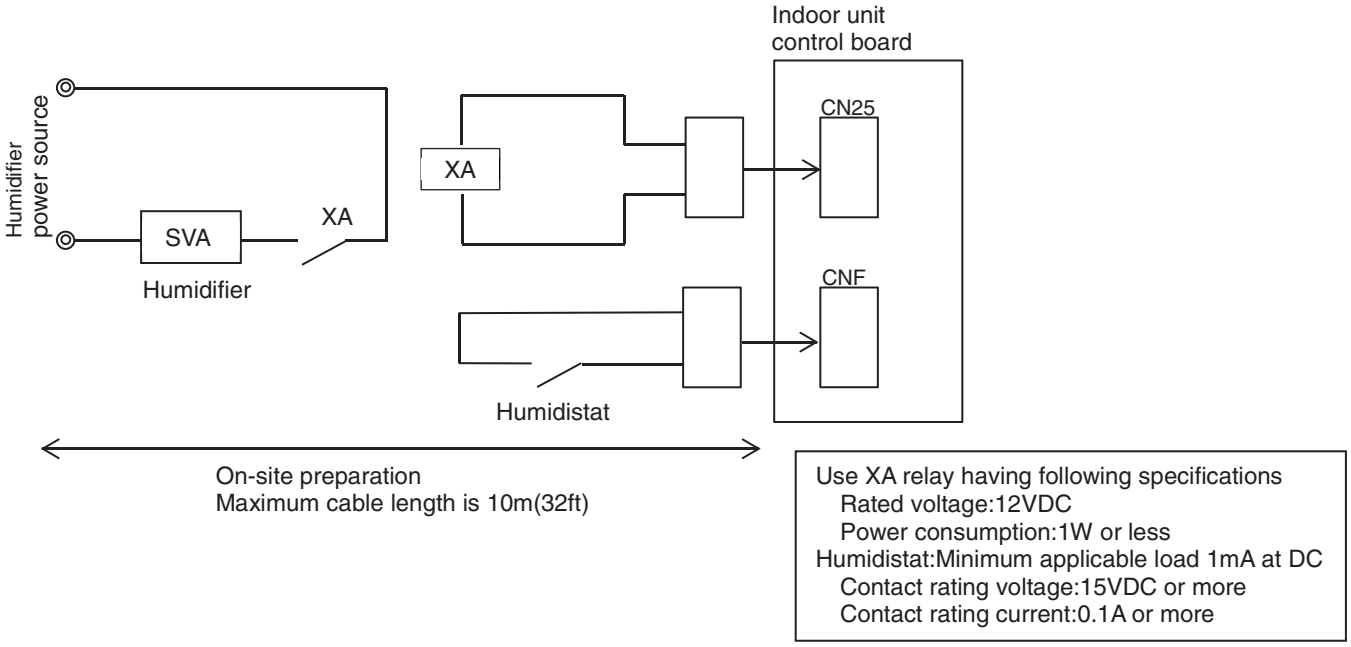

11 ERV (ENERGY RECOVERY VENTILATION) CONTROL

11-1. CONTROL SPECIFICATIONS

The below table shows how the field installed ERV is controlled.

ERV output CNER input	Condition	Fan speed	CN2C output (=Fan output)
OFF	Cool/Heat/Fan operation	RC setting	ON
	Defrost	STOP	OFF
	STOP	STOP	OFF
ON	Cool/Heat/Fan operation	RC setting	ON
	Defrost	STOP	OFF
	STOP	Low	ON

11-2. INSTALLATION

A basic connection method is shown below.

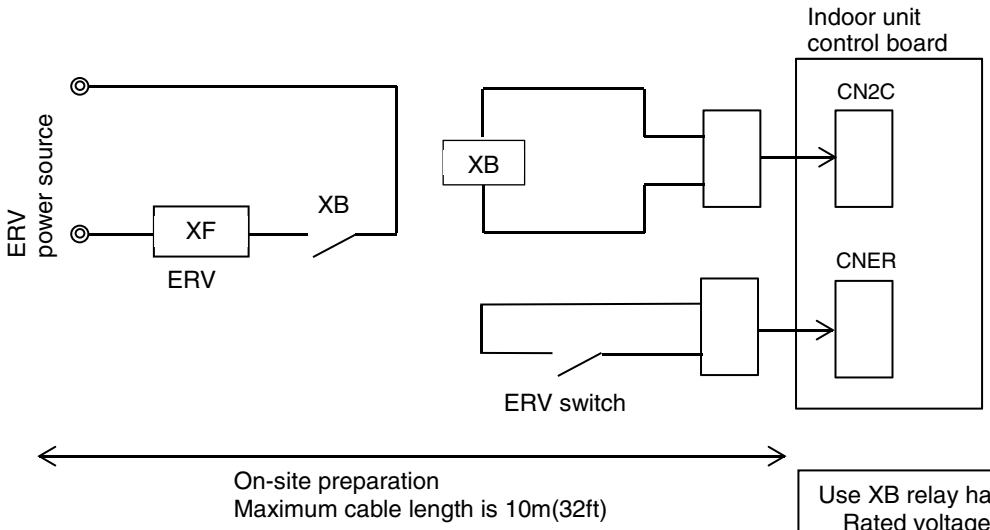

Use XB relay having following specifications
Rated voltage:12VDC
Power consumption:1W or less
ERV switch:Minimum applicable load 1mA at DC
Contact rating voltage:15VDC or more
Contact rating current:0.1A or more

12 TROUBLESHOOTING

12-1. CAUTIONS ON TROUBLESHOOTING

(1) Before troubleshooting, check the followings:

① Check the power supply voltage.

② Check the indoor/outdoor connecting wire for mis-wiring.

(2) Take care the followings during servicing.

① Before servicing the air conditioner, be sure to turn off the remote controller first to stop the main unit, and then turn off the breaker.

② When removing the indoor controller board, hold the edge of the board with care NOT to apply stress on the components.

③ When connecting or disconnecting the connectors, hold the housing of the connector. DO NOT pull the lead wires.

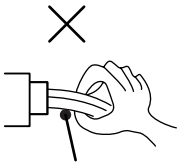

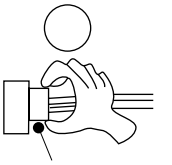

12-2. SELF-CHECK FUNCTION

- **Refer to the installation manual that comes with each remote controller for details.**
- **RF thermostat is not established.**

[Output pattern A] Errors detected by indoor unit

IR wireless remote controller Beeper sounds/OPERATION INDICATOR lamp flashes (Number of times)	Wired remote controller RF thermostat Check code	Symptom	Remark
1	P1	Intake sensor error	
2	P2, P9	Pipe (Liquid or 2-phase pipe) sensor error	
3	E6, E7	Indoor/outdoor unit communication error	
4	P4	Drain sensor error	
5	P5	Drain pump error	
6	P6	Freezing/Overheating safeguard operation	
7	EE	Communication error between indoor and outdoor units	
8	P8	Pipe temperature error	
9	E4	Remote controller signal receiving error	
10	–	–	
11	–	–	
12	Fb	Indoor unit control system error (memory error, etc.)	
No sound	– –	No corresponding	

[Output pattern B] Errors detected by unit other than indoor unit (outdoor unit, etc.)

IR wireless remote controller Beeper sounds/OPERATION INDICATOR lamp flashes (Number of times)	Wired remote controller RF thermostat Check code	Symptom	Remark
1	E9	Indoor/outdoor unit communication error (Transmitting error) (Outdoor unit)	For details, check the LED display of the outdoor controller board.
2	UP	Compressor overcurrent interruption	
3	U3, U4	Open/short of outdoor unit thermistors	
4	UF	Compressor overcurrent interruption (When compressor locked)	
5	U2	Abnormal high discharging temperature/49C worked/ insufficient refrigerant	
6	U1, Ud	Abnormal high pressure (63H worked)/ Overheating safeguard operation	
7	U5	Abnormal temperature of heat sink	
8	U8	Outdoor unit fan protection stop	
9	U6	Compressor overcurrent interruption/Abnormal of power module	
10	U7	Abnormality of super heat due to low discharge temperature	
11	U9, UH	Abnormality such as overvoltage or voltage shortage and abnormal synchronous signal to main circuit/Current sensor error	
12	–	–	
13	–	–	
14	Others	Other errors (Refer to the technical manual for the outdoor unit.)	

***1 If the beeper does not sound again after the initial two beeps to confirm the self-check start signal was received and the OPERATION INDICATOR lamp does not come on, there are no error records.**

***2 If the beeper sounds three times continuously "beep, beep, beep (0.4 + 0.4 + 0.4 sec.)" after the initial two beeps to confirm the self-check start signal was received, the specified refrigerant address is incorrect.**

- On IR wireless remote controller
  The continuous buzzer sounds from receiving section of indoor unit.
  Blink of operation lamp
- On wired remote controller
  Check code displayed on the LCD.

- If the unit cannot be operated properly after the above test run has been performed, refer to the following table to remove the cause.

Symptom			Cause
Wired remote controller		LED 1, 2 (PCB in outdoor unit)	
PLEASE WAIT	For about 2 minutes following power-on	After LED 1, 2 are lighted, LED 2 is turned off, then only LED 1 is lighted. (Correct operation)	• For about 2 minutes after power-on, operation of the remote controller is not possible due to system start-up. (Correct operation)
PLEASE WAIT → Error code	After about 2 minutes has expired following power-on	Only LED 1 is lighted. → LED 1, 2 blink.	• Connector for the outdoor unit's protection device is not connected. • Reverse or open phase wiring for the outdoor unit's power terminal block (L1, L2, L3)
Display messages do not appear even when operation switch is turned ON (operation lamp does not light up).		Only LED 1 is lighted. → LED 1, 2 blinks twice, LED 2 blinks once.	• Incorrect wiring between indoor and outdoor units (incorrect polarity of S1, S2, S3) • Remote controller wire short

On the IR wireless remote controller with conditions above, following phenomena takes place.
- No signals from the remote controller are accepted.
- OPE lamp is blinking.
- The buzzer makes a short ping sound.

Note:
Operation is not possible for about 30 seconds after cancellation of function selection. (Correct operation)

For description of each LED (LED1, 2, 3) provided on the indoor controller, refer to the following table.

LED 1 (power for microcomputer)	Indicates whether control power is supplied. Make sure that this LED is always lit.
LED 2 (power for remote controller)	Indicates whether power is supplied to the remote controller. This LED lights only in the case of the indoor unit which is connected to the outdoor unit refrigerant address “0”.
LED 3 (communication between indoor and outdoor units)	Indicates state of communication between the indoor and outdoor units. Make sure that this LED is always blinking.

AUTO RESTART FUNCTION

Indoor controller board

This model is equipped with the AUTO RESTART FUNCTION.
When the indoor unit is controlled with the remote controller, the operation mode, set temperature, and the fan speed are memorized by the indoor controller board.
The auto restart function sets to work the moment the power has restored after power failure, then, the unit will restart automatically.
Set the AUTO RESTART FUNCTION using the wireless remote controller. (Mode no.1).

12-3. SELF-DIAGNOSIS ACTION TABLE

Note: Refer to the manual of outdoor unit for the details of display such as F, U, and other E.

Error Code	Abnormal point and detection method	Cause	Countermeasure
P1	**Room temperature thermistor (TH1)** ① The unit is in three-minute resume prevention mode if short/open of thermistor is detected. Abnormal if the unit does not reset normally after three minutes. (The unit returns to normal operation, if it has normally reset.) ② Constantly detected during cooling, drying and heating operation Short: 90˚C[194˚F] or more Open: -40˚C[-40˚F] or less	① Defective thermistor characteristics ② Contact failure of connector (CN20) on the indoor controller board (Insert failure) ③ Breaking of wire or contact failure of thermistor wiring ④ Defective indoor controller board	①–③ Check resistance value of thermistor. 0℃ [32˚F].....15.0kΩ 10℃ [50˚F].....9.6kΩ 20℃ [68˚F].....6.3kΩ 30℃ [86˚F].....4.3kΩ 40℃ [104˚F]...3.0kΩ If you put force on (draw or bend) the lead wire with measuring resistance value of thermistor breaking of wire or contact failure can be detected. ② Check contact failure of connector (CN20) on the indoor controller board. Refer to 12-5. Turn the power on again and check restart after inserting connector again. ④ Check room temperature display on remote controller. Replace indoor controller board if there is abnormal difference with actual room temperature. Turn the power off, and on again to operate after check.
P2	**Pipe temperature thermistor/Liquid (TH2)** ① The unit is in three-minute resume prevention mode if short/open of thermistor is detected. Abnormal if the unit does not reset normally after three minutes. (The unit returns to normal operation, if it has normally reset.) ② Constantly detected during cooling, drying, and heating (except defrosting) operation. Short: 90˚C[194˚F] or more Open: -40˚C[-40˚F] or less	① Defective thermistor characteristics ② Contact failure of connector (CN44) on the indoor controller board (Insert failure) ③ Breaking of wire or contact failure of thermistor wiring ④ Defective refrigerant circuit is causing thermistor temperature of 90˚C[194˚F] or more or -40˚C[-40˚F] or less. ⑤ Defective indoor controller board	①–③ Check resistance value of thermistor. For characteristics, refer to (P1) above. ② Check contact failure of connector (CN44) on the indoor controller board. Refer to 12-5. Turn the power on again and check restart after inserting connector again. ④ Check pipe <liquid> temperature with remote controller in test run mode. If pipe <liquid> temperature is extremely low (in cooling mode) or high (in heating mode), refrigerant circuit may have defective. ⑤ Check pipe <liquid> temperature with remote controller in test run mode. If there is extreme difference with actual pipe <liquid> temperature, replace indoor controller board. Turn the power off, and on again to operate after check.
P4 (5701)	**Contact failure of drain float switch (CN4F)** ① Extract when the connector of drain float switch is disconnected. (③ and ④ of connector CN4F is not short-circuited.) ② Constantly detected during operation.	① Contact failure of connector (Insert failure) ② Defective indoor controller board	① Check contact failure of float switch connector. Turn the power on again and check after inserting connector again. ② Operate with connector (CN4F) short-circuited. Refer to 12-5. Replace indoor controller board if abnormality reappears.

Error Code	Abnormal point and detection method	Cause	Countermeasure
P6	**Freezing/overheating protection is working** ① Freezing protection (Cooling mode) The unit is in six-minute resume prevention mode if pipe <liquid or condenser/evaporator> temperature stays under -15℃[5˚F] for three minutes after the compressor started. Abnormal if it stays under -15℃[5˚F] for three minutes again within 16 minutes after six-minute resume prevention mode. ② Overheating protection (Heating mode) The units is in six-minute resume prevention mode if pipe <Liquid or condenser / evaporator> temperature is detected as over 70℃[158˚F] after the compressor started. Abnormal if the temperature of over 70℃[158˚F] is detected again within 10 minutes after six-minute resume prevention mode.	(Cooling or drying mode) ① Clogged filter (reduced airflow) ② Short cycle of air path ③ Low-load (low temperature) operation beyond the tolerance range ④ Defective indoor fan motor • Fan motor is defective. • Indoor controller board is defective. ⑤ Defective outdoor fan control ⑥ Overcharge of refrigerant ⑦ Defective refrigerant circuit (clogs)	(Cooling or drying mode) ① Check clogging of the filter. ② Remove shields. ④ Refer to 12-8. DC Fan motor (FAN MOTOR/ INDOOR CONTROLLER BOARD) ⑤ Check outdoor fan motor. ⑥⑦ Check operating condition of refrigerant circuit.
		(Heating mode) ① Clogged filter (reduced airflow) ② Short cycle of air path ③ Over-load (high temperature) operation beyond the tolerance range ④ Defective indoor fan motor • Fan motor is defective. • Indoor controller board is defective. ⑤ Defective outdoor fan control ⑥ Overcharge of refrigerant ⑦ Defective refrigerant circuit (clogs) ⑧ Bypass circuit of outdoor unit is defective.	(Heating mode) ① Check clogs of the filter. ② Remove shields. ④ Refer to 12-8. DC Fan motor (FAN MOTOR/ INDOOR CONTROLLER BOARD) ⑤ Check outdoor fan motor. ⑥~⑧Check operating condition of refrigerant circuit.
P8	**Pipe temperature** <Cooling mode> Detected as abnormal when the pipe temperature is not in the cooling range 3 minutes after compressor start and 6 minutes after the liquid or condenser/evaporator pipe is out of cooling range. Note 1) It takes at least 9 minutes. to detect. Note 2) Abnormality P8 is not detected in drying mode. Cooling range : -3 deg˚C(-5.4deg˚F) ≧ (TH-TH1) TH: Lower temperature between: liquid pipe temperature (TH2) and condenser/evaporator temperature (TH5) TH1: Intake temperature <Heating mode> When 10 seconds have passed after the compressor starts operation and the hot adjustment mode has finished, the unit is detected as abnormal when condenser/evaporator pipe temperature is not in heating range within 20 minutes. Note 3) It takes at least 27 minutes to detect abnormality. Note 4) It excludes the period of defrosting (Detection restarts when defrosting mode is over) Heating range : 3 deg˚C(5.4deg˚F) ≦ (TH5-TH1)	① Slight temperature difference between indoor room temperature and pipe <liquid or condenser / evaporator> temperature thermistor • Shortage of refrigerant • Disconnected holder of pipe <liquid or condenser / evaporator> thermistor • Defective refrigerant circuit ② Converse connection of extension pipe (on plural units connection) ③ Converse wiring of indoor/ outdoor unit connecting wire (on plural units connection) ④ Defective detection of indoor room temperature and pipe <condenser / evaporator> temperature thermistor ⑤ Stop valve is not opened completely.	①~④ Check pipe <liquid or condenser / evaporator> temperature with room temperature display on remote controller and outdoor controller circuit board. (Conduct temperature check with outdoor controller circuit board after connecting 'A-Control Service Tool(PAC-SK52ST)'.) ②③Check converse connection of extension pipe or converse wiring of indoor/outdoor unit connecting wire.

Error Code	Abnormal point and detection method	Cause	Countermeasure
P9	**Abnormality of pipe temperature thermistor / Condenser-Evaporator (TH5)** ① The unit is in three-minute resume protection mode if short/open of thermistor is detected. Abnormal if the unit does not get back to normal within three minutes. (The unit returns to normal operation, if it has normally reset.) ② Constantly detected during cooling, drying, and heating operation (except defrosting) Short: 90˚C[194˚F] or more Open: -40˚C[-40˚F] or less	① Defective thermistor characteristics ② Contact failure of connector (CN44) on the indoor controller board (Insert failure) ③ Breaking of wire or contact failure of thermistor wiring ④ Temperature of thermistor is 90℃[194˚F] or more or -40˚C[-40˚F] or less caused by defective refrigerant circuit. ⑤ Defective indoor controller board	①–③ Check resistance value of thermistor. For characteristics, refer to (P1) above. ② Check contact failure of connector (CN44) on the indoor controller board. Refer to 12-5. Turn the power on and check restart after inserting connector again. ④ Operate in test run mode and check pipe <condenser / evaporator> temperature. If pipe <condenser / evaporator> temperature is extremely low (in cooling mode) or high (in heating mode), refrigerant circuit may have defect. ⑤ When no problems are found in ①-④ above, replace the indoor unit control board.
E0 or E4	**Remote controller transmission error(E0)/signal receiving error(E4)** ① Abnormal if main or sub remote controller can not receive normally any transmission from indoor unit of refrigerant address “0” for three minutes. (Error code : E0) ② Abnormal if sub remote controller could not receive for any signal for two minutes. (Error code: E0) ① Abnormal if indoor controller board can not receive normally any data from remote controller board or from other indoor controller board for three minutes. (Error code: E4) ② Indoor controller board cannot receive any signal from remote controller for two minutes. (Error code: E4)	① Contact failure at transmission wire of remote controller ② All remote controllers are set as “sub” remote controller. In this case, E0 is displayed on remote controller, and E4 is displayed at LED (LED1, LED2) on the outdoor controller circuit board. ③ Mis-wiring of remote controller ④ Defective transmitting receiving circuit of remote controller ⑤ Defective transmitting receiving circuit of indoor controller board of refrigerant address “0” ⑥ Noise has entered into the transmission wire of remote controller.	① Check disconnection or looseness of indoor unit or transmission wire of remote controller. ② Set one of the remote controllers “main”. If there is no problem with the action above. ③ Check wiring of remote controller. • Total wiring length: max.500m (Do not use cable × 3 or more) • The number of connecting indoor units: max.16units • The number of connecting remote controller: max.2units When it is not the above-mentioned problem of ①~③ ④ Diagnose remote controllers. a) When “RC OK” is displayed, Remote controllers have no problem. Turn the power off, and on again to check. If abnormality generates again, replace indoor controller board. b) When “RC NG” is displayed, Replace remote controller. c) When “RC E3” is displayed, d) When “ERC 00-06” is displayed, [c),d)→Noise may be causing abnormality.] ∗ If the unit is not normal after replacing indoor controller board in group control, indoor controller board of address “0” may be abnormal.
E3 or E5	**Remote controller transmission error(E3)/signal receiving error(E5)** ① Abnormal if remote controller could not find blank of transmission path for six seconds and could not transmit. (Error code: E3) ② Remote controller receives transmitted data at the same time, compares the data, and when detecting it, judges different data to be abnormal 30 continuous times. (Error code: E3) ① Abnormal if indoor controller board could not find blank of transmission path. (Error code: E5) ② Indoor controller board receives transmitted data at the same time, compares the data,and when detecting it, judges different data to be abnormal 30 continuous times. (Error code: E5)	① Two remote controller are set as “main.” (In case of 2 remote controllers) ② Remote controller is connected with two indoor units or more. ③ Repetition of refrigerant address ④ Defective transmitting receiving circuit of remote controller ⑤ Defective transmitting receiving circuit of indoor controller board ⑥ Noise has entered into transmission wire of remote controller.	① Set a remote controller to main, and the other to sub. ② Remote controller is connected with only one indoor unit. ③ The address changes to a separate setting. ④~⑥ Diagnose remote controller. a) When “RC OK”is displayed, remote controllers have no problem. Turn the power off,and on again to check. When becoming abnormal again, replace indoor controller board. b) When “RC NG”is displayed, replace remote controller. c) When “RC E3”or “ERC 00-66”is displayed, noise may be causing abnormality.

Error Code	Abnormal point and detection method	Cause	Countermeasure
E6	**Indoor/outdoor unit communication error (Signal receiving error)** ① Abnormal if indoor controller board cannot receive any signal normally for six minutes after turning the power on. ② Abnormal if indoor controller board cannot receive any signal normally for three minutes. ③ Consider the unit as abnormal under the following condition: When two or more indoor units are connected to an outdoor unit, indoor controller board cannot receive a signal for three minutes from outdoor controller circuit board, a signal which allows outdoor controller circuit board to transmit signals.	① Contact failure, short circuit or, mis-wiring (converse wiring) of indoor/outdoor unit connecting wire ② Defective transmitting receiving circuit of indoor controller board ③ Defective transmitting receiving circuit of indoor controller board ④ Noise has entered into indoor/ outdoor unit connecting wire.	∗ Check LED display on the outdoor control circuit board. (Connect A-control service tool, PAC-SK52ST.) Refer to EA-EC item if LED displays EA-EC. ① Check disconnection or looseness of indoor/ outdoor unit connecting wire of indoor unit or outdoor unit. Check all the units in case of twin triple indoor unit system. ②-④ Turn the power off, and on again to check. If abnormality generates again, replace indoor controller board or outdoor controller circuit board. ∗ Other indoor controller board may have defect in case of twin triple indoor unit system.
E7	**Indoor/outdoor unit communication error (Transmitting error)** Abnormal if “1” receiving is detected 30 times continuously though indoor controller board has transmitted “0”.	① Defective transmitting receiving circuit of indoor controller board ② Noise has entered into power supply. ③ Noise has entered into outdoor control wire.	①-③ Turn the power off, and on again to check. If abnormality generates again, replace indoor controller board.
Fb	**Indoor controller board** Abnormal if data cannot be read normally from the nonvolatile memory of the indoor controller board.	① Defective indoor controller board	① Replace indoor controller board.
E1 or E2	**Remote controller control board** ① Abnormal if data cannot be read normally from the nonvolatile memory of the remote controller control board. (Error code: E1) ② Abnormal if the clock function of remote controller cannot be operated normally. (Error code: E2)	① Defective remote controller	① Replace remote controller.

12-4. TROUBLESHOOTING BY INFERIOR PHENOMENA

Note: Refer to the manual of outdoor unit for the detail of remote controller.

Phenomena	Cause	Countermeasure
(1)LED2 on indoor controller board is off.	• When LED1 on indoor controller board is also off. ① Power supply of rated voltage is not supplied to outdoor unit.	① Check the voltage of outdoor power supply terminal block (L, N) or (L_3, N). • When AC 208~230V is not detected. Check the power wiring to outdoor unit and the breaker. • When AC 208~230V is detected. —Check ② (below).
	② Defective outdoor controller circuit board	② Check the voltage between outdoor terminal block S1 and S2. • When AC 208~230V is not detected. Check the fuse on outdoor controller circuit board. Check the wiring connection. • When AC 208~230V is detected. —Check ③ (below).
	③ Power supply of 208~230V is not supplied to indoor unit.	③ Check the voltage between indoor terminal block S1 and S2. • When AC 208~230V is not detected. Check indoor/outdoor unit connecting wire for mis-wiring. • When AC 208~230V is detected. —Check ④ (below).
	④ Defective indoor controller board	④ Check the fuse on indoor controller board. Check the wiring connection. If no problem are found, indoor controller board is defective.
(2)LED2 on indoor controller board is blinking.	• When LED1 on indoor controller board is also blinking. Connection failure of indoor/outdoor unit connecting wire • When LED1 is lit.	Check indoor/outdoor unit connecting wire for connection failure.
	① Mis-wiring of remote controller wires Under twin triple indoor unit system, 2 or more indoor units are wired together.	① Check the connection of remote controller wires in case of twin triple indoor unit system. When 2 or more indoor units are wired in one refrigerant system, connect remote controller wires to one of those units.
	② Refrigerant address for outdoor unit is wrong or not set. Under grouping control system, there are some units whose refrigerant address is 0.	② Check the setting of refrigerant address in case of grouping control system. If there are some units whose refrigerant addresses are 0 in one group, set one of the units to 0 using SW1 (3-6) on outdoor controller circuit board.
	③ Short-cut of remote controller wires ④ Defective remote controller	③④ Remove remote controller wires and check LED2 on indoor controller board. • When LED2 is blinking, check the short-cut of remote controller wires. • When LED2 is lit, connect remote controller wires again and: if LED2 is blinking, remote controller is defective; if LED2 is lit, connection failure of remote controller terminal block etc. has returned to normal.

12-5. TEST POINT DIAGRAM

12-5-1. Power supply board

PVA-A30AA4
PVA-A36AA4
PVA-A42AA4

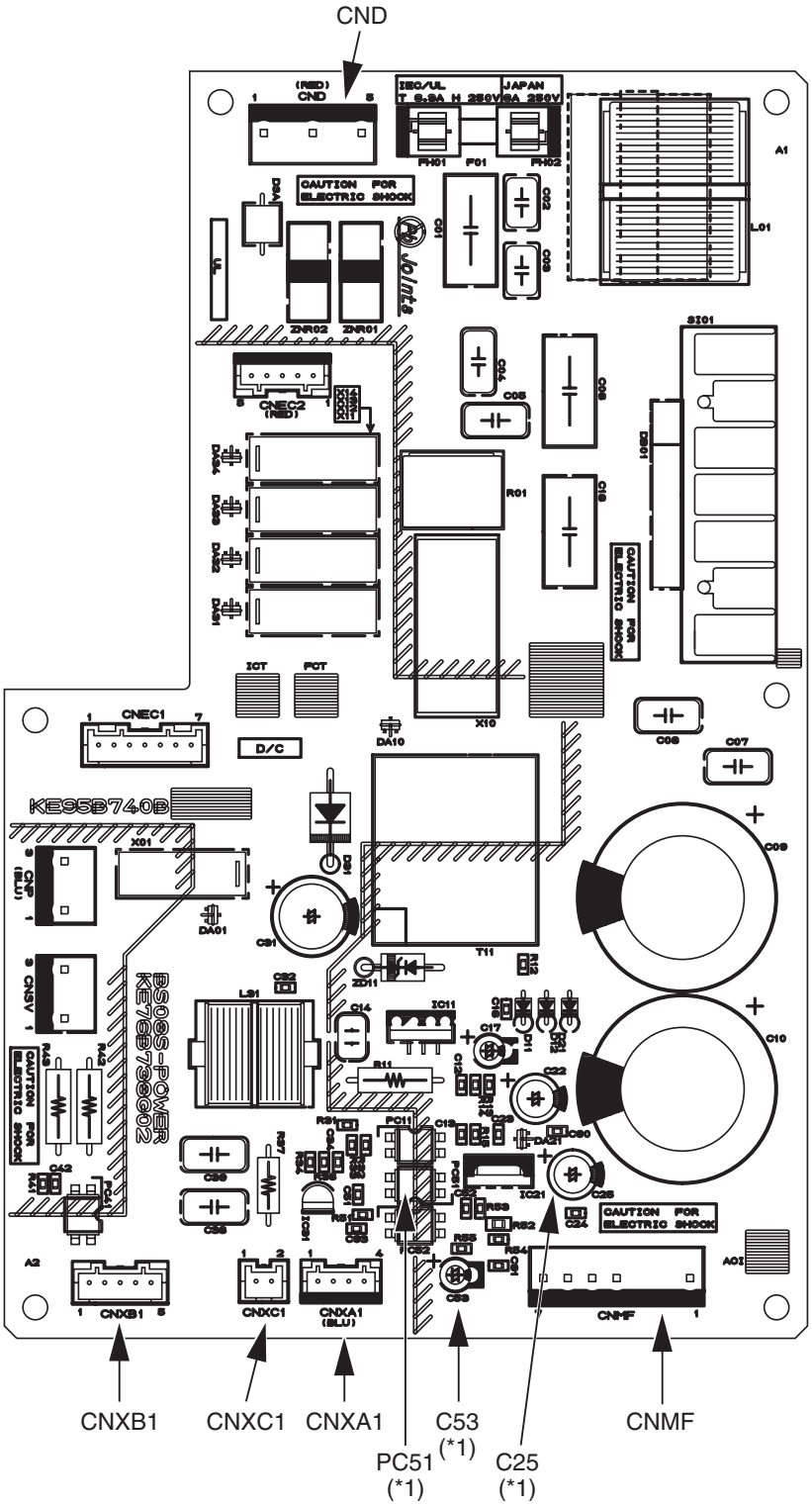

CND Power supply voltage (208 - 230VAC)

CNMF Fan motor output
1 - 4: 310 - 340 VDC
5 - 4: 15 VDC
6 - 4: 0 - 6.5 VDC
7 - 4: Stop 0 or 15 VDC
Run 7.5 VDC
(0 - 15 pulse)

CNXA1
Connect to the indoor controller board

CNXB1
Connect to the indoor controller board

CNXC1
Connect to the indoor controller board

CNXA2
Connect to the indoor power board

CNXB2
Connect to the indoor power board

CNXC2
Connect to the indoor power board

(*1)

V_{FG} Voltage on the (-) side of PC51 and C25
(Same with the voltage between 7 (+) and 4 (-) of CNMF)

V_{CC} Voltage between the C25 pins 15 VDC
(Same with the voltage between 5 (+) and 4 (-) of CNMF)

V_{sp} Voltage between the C53 pins
0VDC (with the fan stopped)
1 - 6.5VDC (with the fan in operation)
(Same with the voltage between 6 (+) and 4 (-) of CNMF)

12-5-2. Indoor controller board

PVA-A30AA4
PVA-A36AA4
PVA-A42AA4

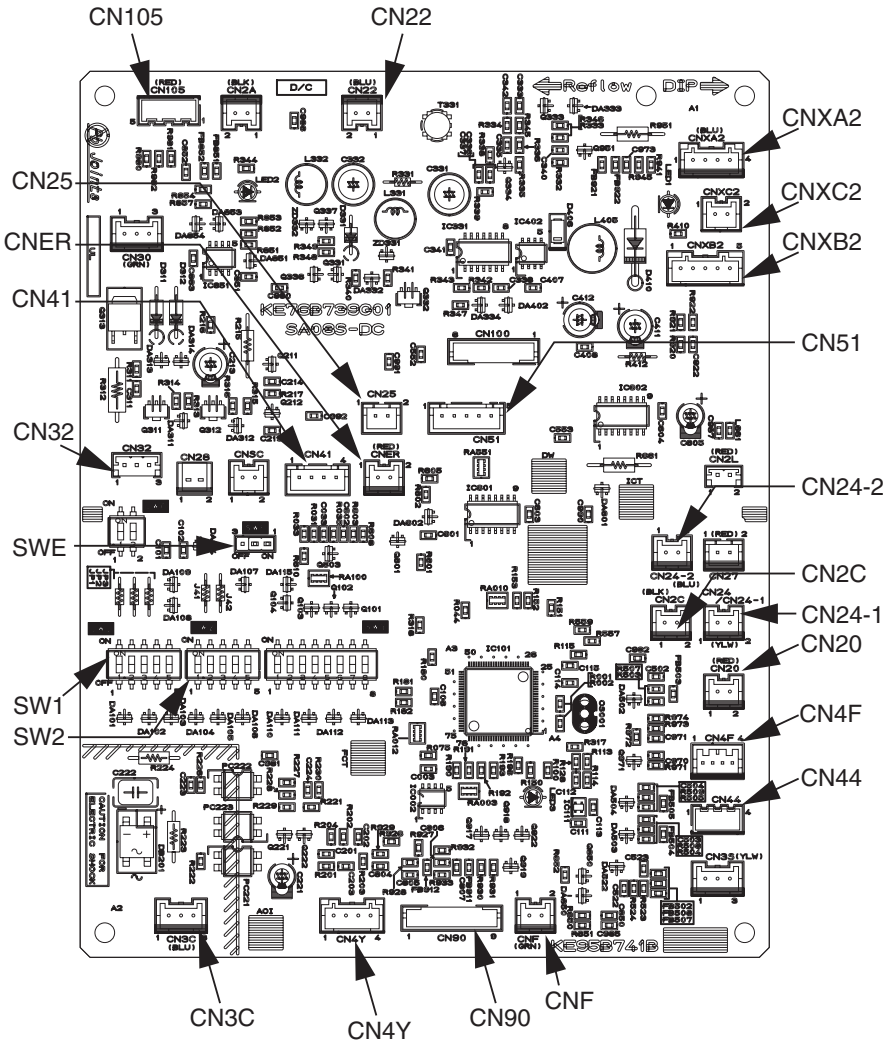

SWE Emergency operation

SW1 Model selection

SW2 Capacity setting

CN105 Radio frequency interface

CN32 Remote start/stop adapter

CN22 For MA remote controller cable connection (10 - 13 VDC)

CN51 Centralized control

CN41 JAMA standard HA terminal A

CN44 Thermistor (liquid/condenser/evaporator temperature)

CN4F Float sensor

CN20 Thermistor (Inlet temperature)

CN24-1
1st Heater control (12VDC)

CN24-2
2nd Heater control

CN4Y For fan control

CN3C Indoor-outdoor transmission (0 - 24VDC)

CN90 Wireless remote controller

CNXA2
Connect to the indoor controller board

CNXB2
Connect to the indoor controller board

CNXC2
Connect to the indoor controller board

CNXA1
Connect to the indoor power board

CNXB1
Connect to the indoor power board

CNXC1
Connect to the indoor power board

CNER
ERV controll

CN2C
ERV input

CN25
Humidity conrol

CNF
Humidity input

12-6. TROUBLE CRITERION OF MAIN PARTS
PVA-A30AA4
PVA-A36AA4
PVA-A42AA4

<table>
<tr><th>Part name</th><th>Check method and criterion</th></tr>
<tr><td>Room temperature thermistor (TH1)</td><td rowspan="3">Measure the resistance with a tester.
(Part temperature 10°C (50°F) ~ 30°C (86°F))
<table><tr><th>Normal</th><th>Abnormal</th></tr><tr><td>4.3kΩ~9.6kΩ</td><td>Opened or short-circuited</td></tr></table></td></tr>
<tr><td>Pipe temperature thermistor/liquid (TH2)</td></tr>
<tr><td>Condenser/evaporator temperature thermistor (TH5)</td></tr>
<tr><td>Wiring diagram</td><td> 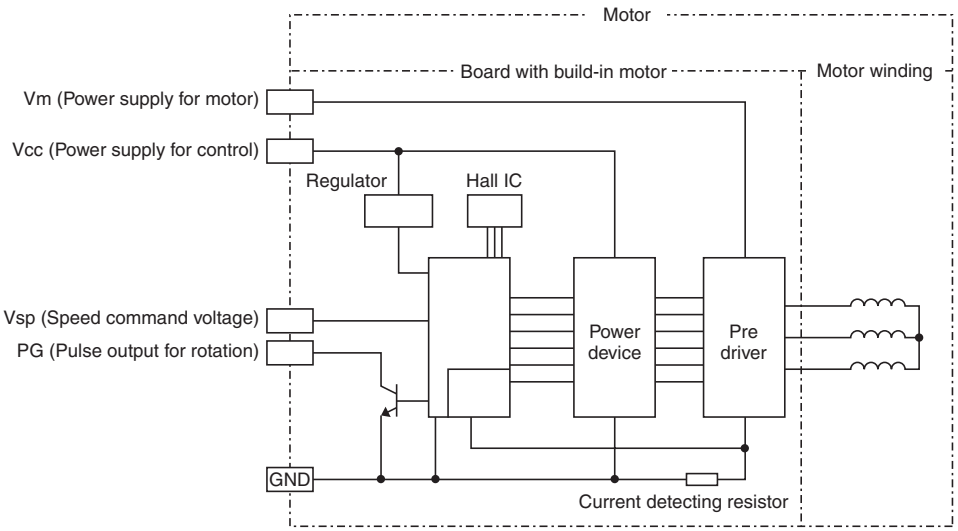
</td></tr>
</table>

12-7. Thermistor

<Thermistor Characteristic graph>

Thermistor for lower temperature

Room temperature thermistor (TH1)
Pipe temperature thermistor (TH2)
Condenser/evaporator temperature thermistor (TH5)

Thermistor R_0 = 15 kΩ ± 3%
Fixed number of B = 3480 kΩ ± 2%

$$Rt = 15\exp\{3480(\frac{1}{273+t} - \frac{1}{273})\}$$

0°C	(32°F)	15 kΩ
10°C	(50°F)	9.6 kΩ
20°C	(68°F)	6.3 kΩ
25°C	(77°F)	5.2 kΩ
30°C	(86°F)	4.3 kΩ
40°C	(104°F)	3.0 kΩ

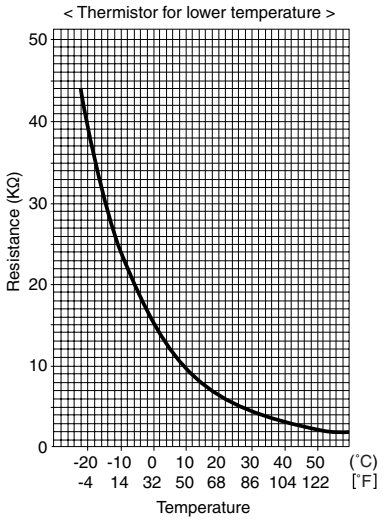

12-8. DC FAN MOTOR (FAN MOTOR/INDOOR CONTROLLER BOARD)

Check method of DC fan motor (fan motor/indoor controller circuit board)

① Notes

· High voltage is applied to the connecter (CNMF) for the fan motor. Give attention to the service.

· Do not pull out the connector (CNMF) for the motor with the power supply on.
(It causes trouble of the indoor controller circuit board and fan motor.)

② Self check

Symptom : The indoor fan cannot turn around.

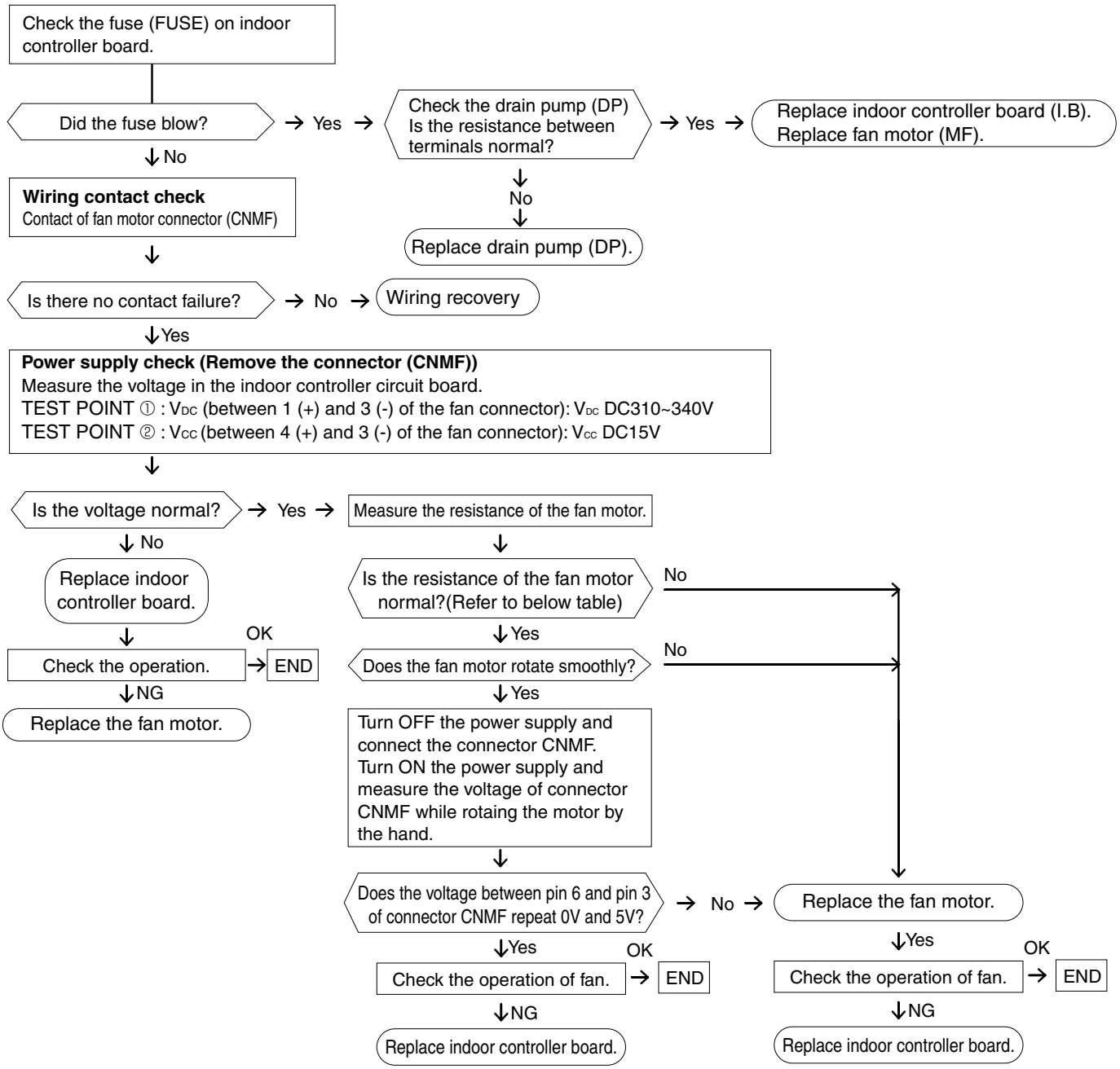

	PVA-A30AA4	PVA-A36,42AA4
Measuring points	Resistance	
pin 1 - pin 3	O.L.	1MΩ
pin 4 - pin 3	50kΩ	47kΩ
pin 5 - pin 3	150kΩ	143kΩ
pin 6 - pin 3	O.L.	O.L.

*To measure the resistance, connect the negative (-) end of the tester to pin 3.

12-9. FUNCTIONS OF DIP SWITCH AND JUMPER WIRE

Each function is controlled by the dip switch and the jumper wire on control p.c. board.
SW1 and SW2 are equipped only for service parts.
Model setting and capacity setting are memorized in the nonvolatile memory of the control p.c. board of the unit.

(Marks in the table below) Jumper wire (○ : Short ×: Open)

<table>
<tr><th>Jumper wire</th><th>Functions</th><th>Setting by the dip switch and jumper wire</th><th>Remarks</th></tr>
<tr><td>SW1</td><td>Model settings</td><td>For service board
</td><td></td></tr>
<tr><td>SW2</td><td>Capacity settings</td><td>
<table>
<tr><th>MODELS</th><th>Service board</th></tr>
<tr><td>PVA-A30AA4</td><td>
</td></tr>
<tr><td>PVA-A36AA4</td><td>
</td></tr>
<tr><td>PVA-A42AA4</td><td>
</td></tr>
</table>
</td><td></td></tr>
<tr><td>J41
J42</td><td>Pair number setting with wireless remote controller</td><td>
<table>
<tr><th rowspan="2">Wireless remote controller setting</th><th colspan="2">Control PCB setting</th></tr>
<tr><th>J41</th><th>J42</th></tr>
<tr><td>0</td><td>○</td><td>○</td></tr>
<tr><td>1</td><td>×</td><td>○</td></tr>
<tr><td>2</td><td>○</td><td>×</td></tr>
<tr><td>3 ~ 9</td><td>×</td><td>×</td></tr>
</table>
</td><td><Settings at time of factory shipment>
Wireless remote controller: 0
Control PCB: ○ (for both J41 and J42)
Four pair number settings are supported.
The pair number settings of the wireless remote controller and indoor control PCB (J41/J42) are given in the table on the left.
('×' in the table indicates the jumper line is disconnected.)</td></tr>
<tr><td>JP1</td><td>Unit type setting</td><td>
<table>
<tr><th>Model</th><th>JP1</th></tr>
<tr><td>Without TH5</td><td>○</td></tr>
<tr><td>With TH5</td><td>×</td></tr>
</table>
</td><td>There is no jumper (JP1) because these models have the cond./eva. temperature thermistor (TH5).</td></tr>
<tr><td>JP3</td><td>Indoor controller board type setting</td><td>
<table>
<tr><th>Indoor controller board type</th><th>JP3</th></tr>
<tr><td>Factory shipment</td><td>○</td></tr>
<tr><td>Service parts</td><td>○</td></tr>
</table>
</td><td></td></tr>
</table>

13 DISASSEMBLY PROCEDURE

1. Control box

Exercise caution when removing heavy parts.

1. Remove the Electric panel (2 screws)
2. Remove the Control box cover (1 screw)

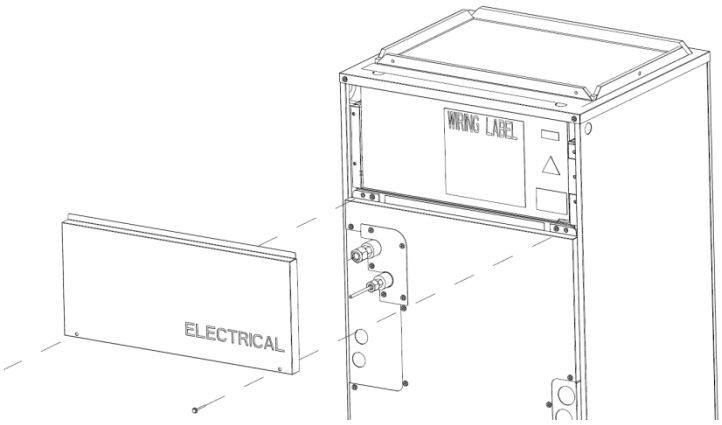

Fig. 1

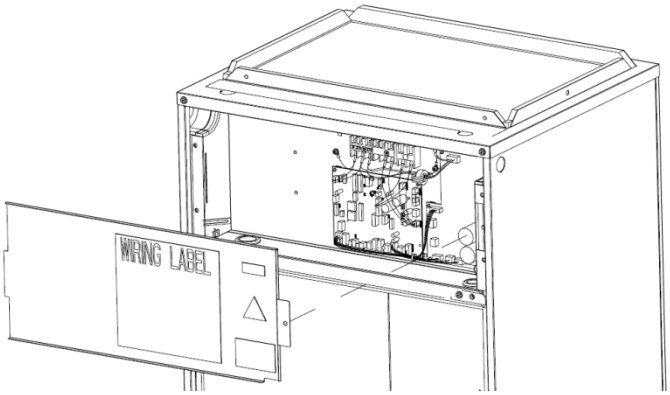

Fig. 2

2. Thermistor (Return Air)

Exercise caution when removing heavy parts.

1. Remove the Filter panel (2 thumbscrews).
2. Remove the Blower panel (2 screws).

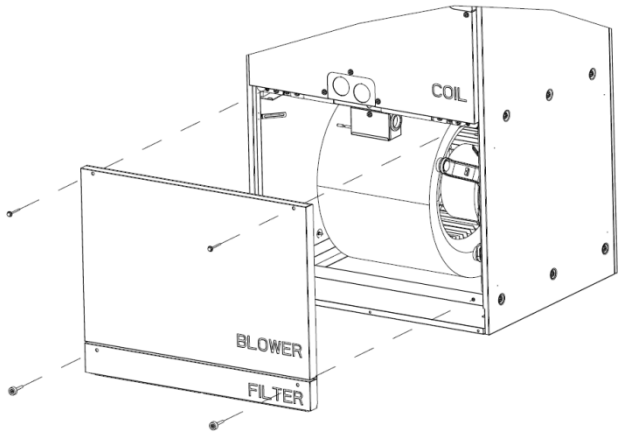

Fig. 3

3. Remove the cover over the Return Air thermistor box and unplug the thermistor.
4. Pull out the thermistor holder and thermistor inside the box.

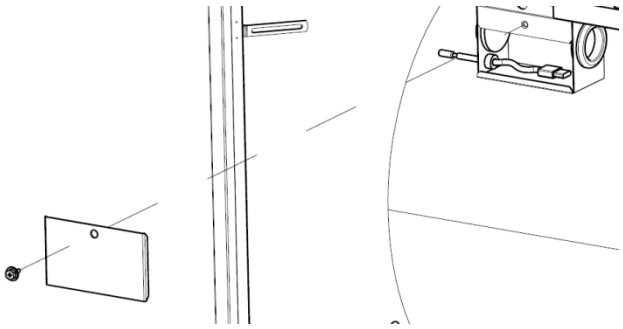

Fig. 4

3. Coil Assembly

Exercise caution when removing heavy parts.

1. Remove the Electrical, Blower and Filter panel indicated in sections 1 and 2.
2. Remove the Coil panel by removing all of the screws securing it to the (3) smaller panels for refrigerant and drain lines.

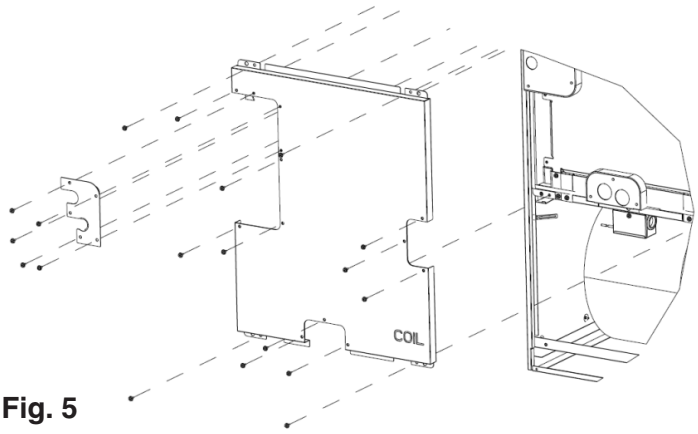

Fig. 5

3. Slide the smaller panels in the directions indicated and remove.

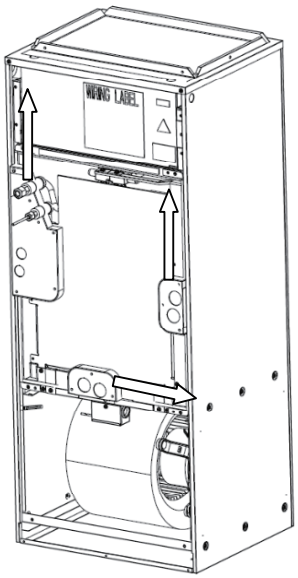

Fig. 6

4 Remove the (1 or 2) brackets that secure the coil, unplug the ther mistors from the control board and route the wires out of the control box area and into the coil section. Next, slide the coil from the frame.

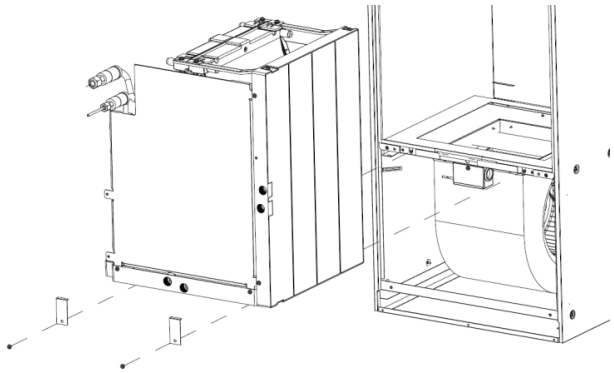

Fig. 7

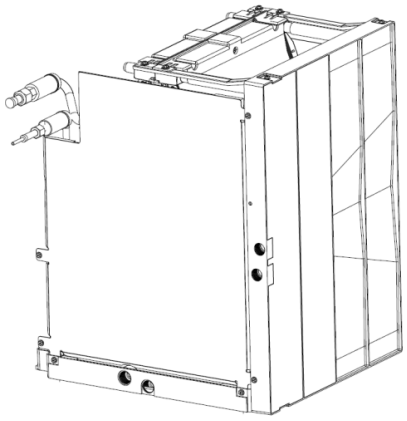

Fig. 8

5. Remove the plate covering the coil assembly to access the thermistors.

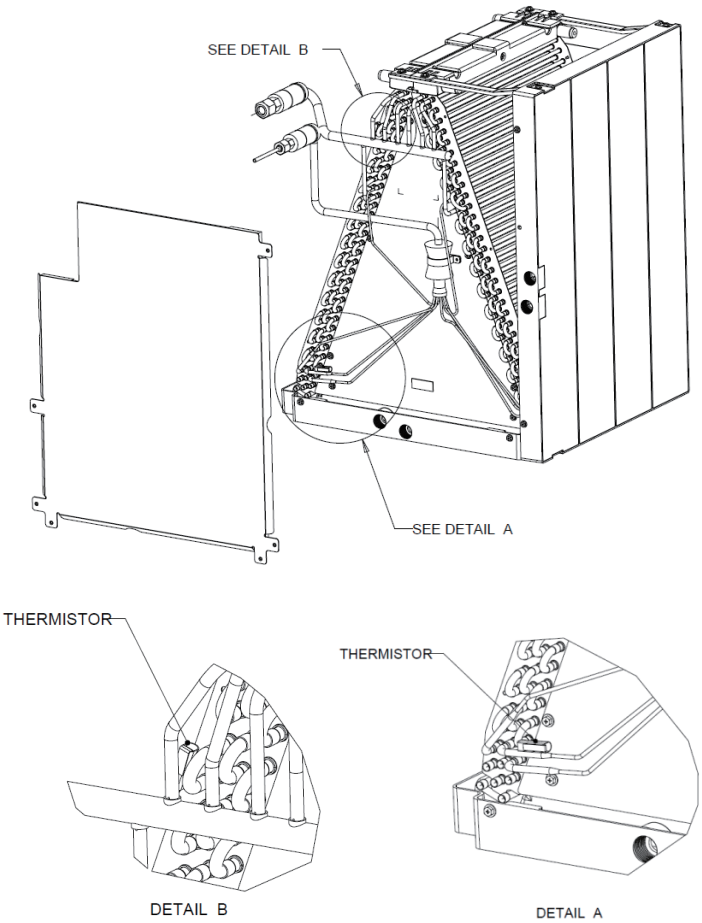

Fig. 9

6. Remove lower and side drain pan.

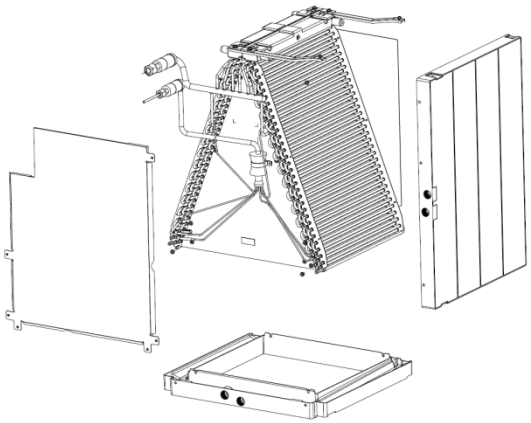

Fig. 10

4. Blower/Fan Assembly

Exercise caution when removing heavy parts.

1. Remove the Blower and Filter panel (along with filter if installed) indicated in section 2.
2. Remove the (1 or 2) brackets that secure the coil assembly.

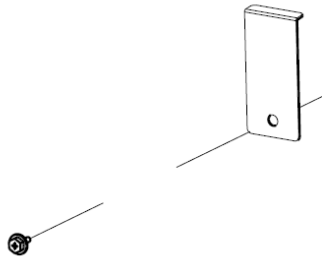

Fig. 11

3. Remove the door that covers the small enclosure attached to the fan assembly (Fig.12).
   Unplug the motor and route the wire harness out of the enclosure.
4. Remove the (2) screws that secure the fan assembly and slide out.

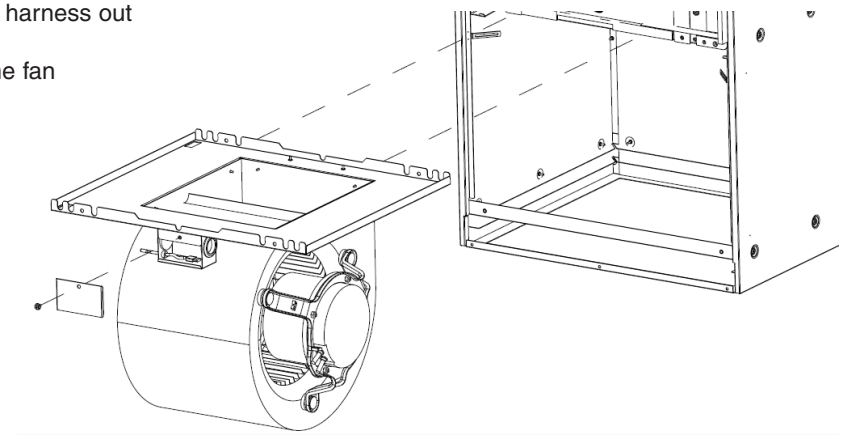

Fig. 12

MITSUBISHI ELECTRIC CORPORATION

http://Global.MitsubishiElectric.com

HWE1406A

New publication effective Feb. 2015
Specifications subject to change without notice