SERVICE PARTS LIST FOR MITSUBISHI ELECTRIC PACKAGED AIR-CONDITIONERS

Series : SEZ-KD•NA4.TH

REVISED

Dec. 2016

BWE1018A

INDEX
SEZ-KD09NA4.TH SEZ-KD12NA4.TH SEZ-KD15NA4.TH SEZ-KD18NA4.TH

MITSUBISHI ELECTRIC

Part information update day : **2016/12/27**

Please change the old catalog (issued Oct. 2010, No.BWE10180) to this new catalog.
Content of revision : Some of parts are changed.

EXTERNAL PARTS

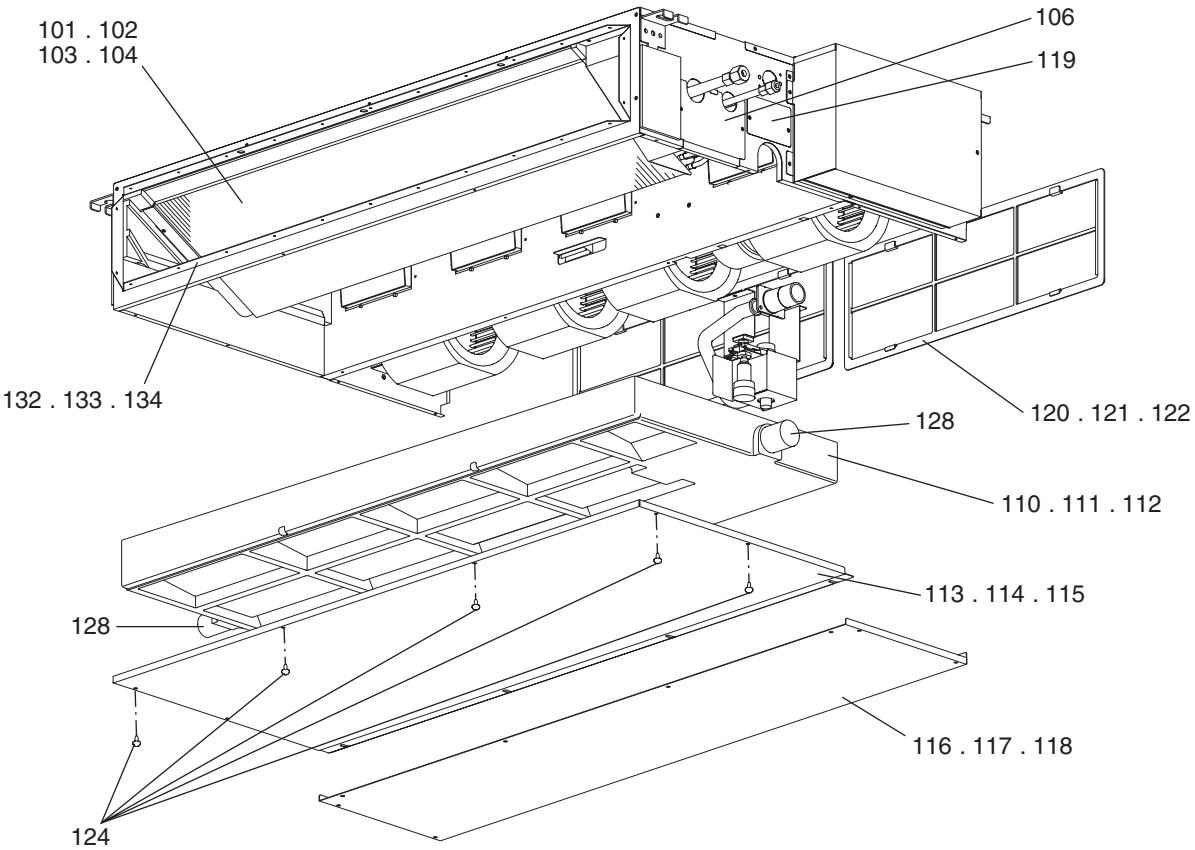

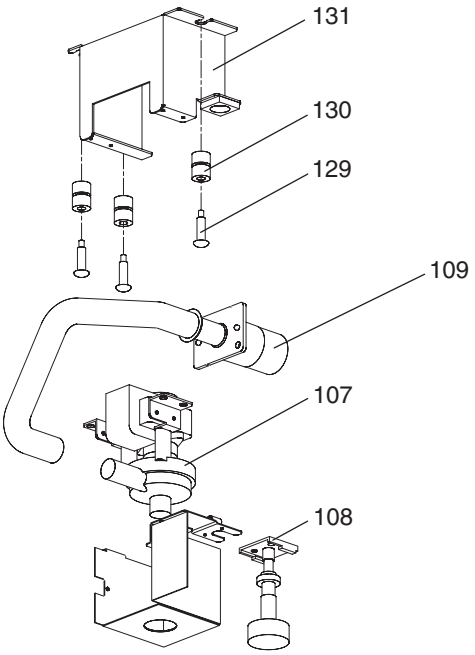

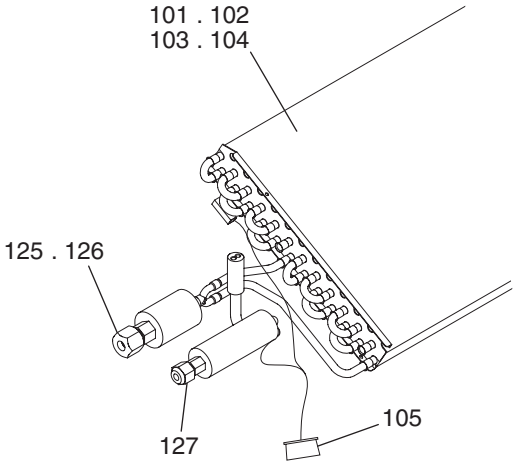

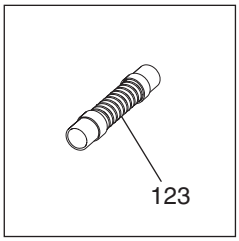

EXTERNAL PARTS

No.	Part No.	G : RoHS Apply Only W : RoHS Apply by Running Change	Part Name	Spec.	SEZ-KD09NA4.TH	SEZ-KD12NA4.TH	SEZ-KD15NA4.TH	SEZ-KD18NA4.TH			Dwg. No.	Notes for the models	Revision info.
101	E17 319 620	G	HEAT EXCHANGER		1						KB00A073B01	<K25>	
102	E17 320 620	G	HEAT EXCHANGER			1					KB00A076B01	<K35>	
103	E17 321 620	G	HEAT EXCHANGER				1				KB00A076B02	<K50>	
104	E17 531 620	G	HEAT EXCHANGER					1			KB00A078B03	<K60>	
105	E17 319 307	G	THERMISTOR		1	1	1	1			RG71V202G01		
106	E17 319 690	G	COVER PIPE ASSY		1	1	1	1			KB00H214G02		
107	E17 409 355	G	PUMP	PLD	1	1	1	1			KB56B515H02		
108	E17 409 145	G	FLOAT SWITCH		1	1	1	1			BH68C952H02		
109	E17 409 704	G	SOCKET ASSY		1	1	1	1			KB00G754G01		
110	E17 472 700	G	DRAIN PAN S ASSY		1						KB00G775G16		
111	E17 475 700	G	DRAIN PAN M ASSY			1	1				KB00G775G17		
112	E17 477 700	G	DRAIN PAN L ASSY					1			KB00G775G18		
113	E17 472 717	G	PANEL UNDER 1 S ASSY		1						KB00G776G10		
114	E17 475 717	G	PANEL UNDER 1 M ASSY			1	1				KB00G776G11		
115	E17 477 717	G	PANEL UNDER 1 L ASSY					1			KB00G776G12		
116	E17 319 718	G	PANEL UNDER 2 S		1						KB02B455G02		
117	E17 320 718	G	PANEL UNDER 2 M			1	1				KB02B457G01		
118	E17 326 718	G	PANEL UNDER 2 L					1			KB02A071G02		
119	E17 409 690	G	COVER ASSY		1	1	1	1			KB00H222G03		
120	E17 319 100	G	FILTER 15		1						KB35B272G02		
121	E17 320 100	G	FILTER 40			1	1				KB35B207G02		
122	E17 326 100	G	FILTER 63					2			KB35B208G02		
123	E17 319 702	G	DRAIN HOSE		1	1	1	1			KB27T150H01		
124	E17 319 250	G	SCREW ASSY		4	5	5	5			KB12H389G01		
125	E17 321 660	G	NUT FLARE	1/2			1	1			BG12S008H01		
126	E17 319 660	G	NUT FLARE	3/8	1	1					Z211A143H06		
127	E17 320 660	G	NUT FLARE	1/4	1	1	1	1			Z211A143H01		
128	E17 414 524	G	PLUG	RUBBER	2	2	2	2			KB26H049H01		
129	E17 548 250	G	SCREW SPECIAL	M4×6	3	3	3	3			Z003Z333H05		
130	DB26F013L01	G	CUSHION		3	3	3	3			DB26F013L01		
131	KB00M769G02	G	ATTACHMENT PUMP		1	1	1	1			KB00M769G02		
132	E17 528 800	G	PANEL DUCT S ASSY		1						KB00G751G07		
133	E17 529 800	G	PANEL DUCT M ASSY			1	1				KB00G751G08		
134	E17 531 800	G	PANEL DUCT L ASSY					1			KB00G751G09		

BLOWER PARTS (1)

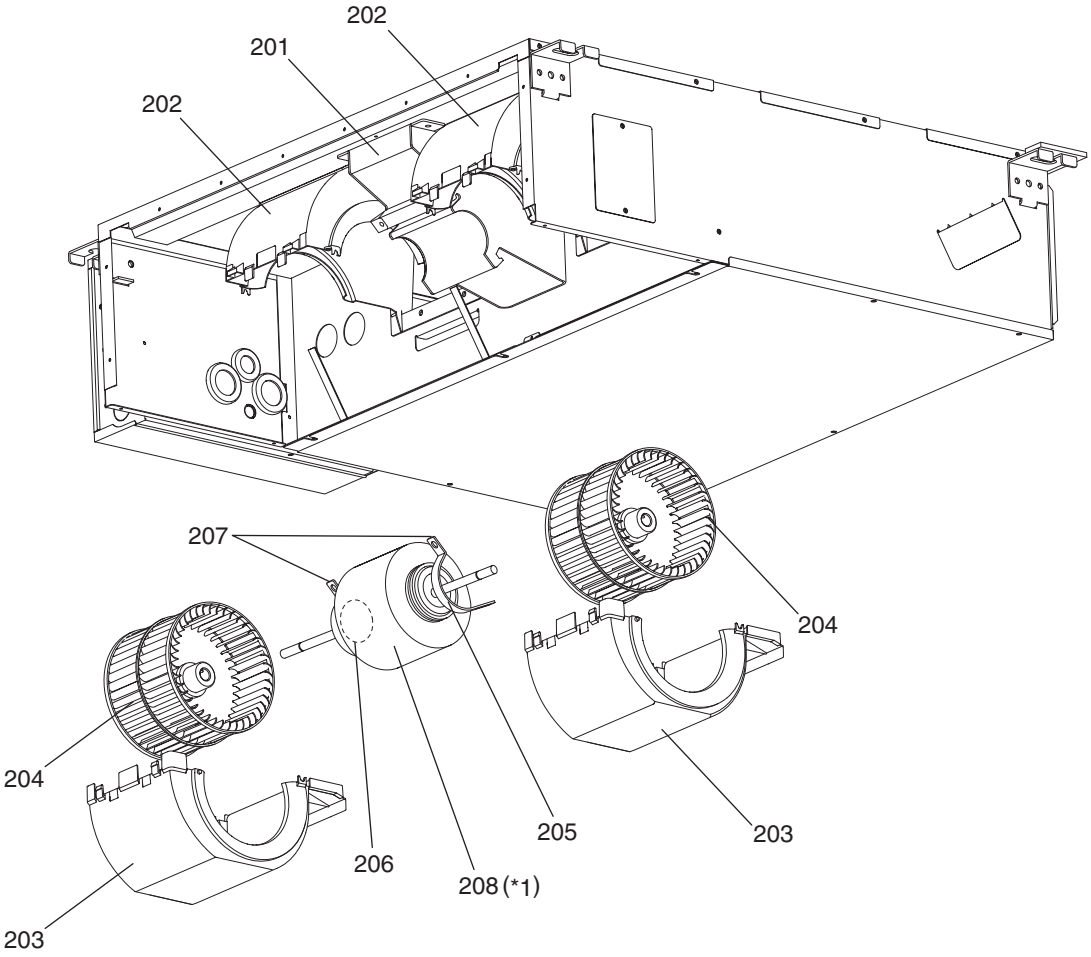

*1 Motor (Parts No.208) comes with rubber mounts.

BLOWER PARTS (1)

No.	Part No.	G : RoHS Apply Only W : RoHS Apply by Running Change	Part Name	Spec.	SEZ-KD09NA4.TH	SEZ-KD12NA4.TH					Dwg. No.	Notes for the models	Revision info.
201	E17 319 128	G	MOTOR BASE		1	1					KB02B464G02		
202	E17 319 129	G	FAN CASE A ASSY		2	2					KB00G773G03		
203	E17 320 129	G	FAN CASE B ASSY		2	2					KB00G774G03		
204	E17 319 500	G	SIROCCO FAN ASSY		2	2					KB00H341G01		
205	E17 C45 505	G	RUBBER MOUNT A		1	1					KJ31H007H01		Chg.
206	E17 C46 505	G	RUBBER MOUNT B		1	1					KJ31H008H01		Chg.
207	KB02H047G02	G	ATTACHMENT		2	2					KB02H047G02		
208	E17 C45 300	G	MOTOR	SIC-70CW-D8114-1E	1	1					KS00T859G06	*1 Includes rubber mounts	Chg.

BLOWER PARTS (2)

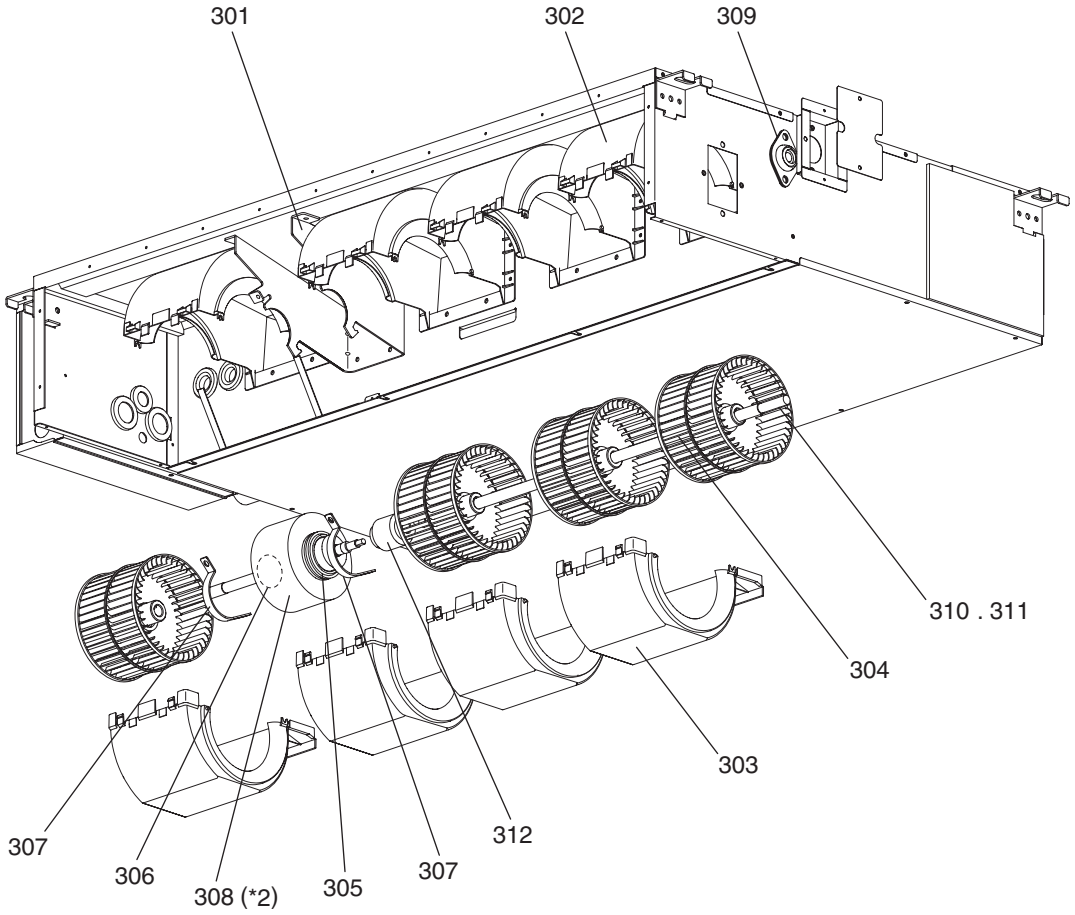

*2 Motor (Parts No.308) comes with rubber mounts.

BLOWER PARTS (2)

No.	Part No.	G : RoHS Apply Only W : RoHS Apply by Running Change	Part Name	Spec.	SEZ-KD15NA4.TH	SEZ-KD18NA4.TH					Dwg. No.	Notes for the models	Revision info.
301	E17 319 128	G	MOTOR BASE		1	1					KB02B464G02		
302	E17 319 129	G	FAN CASE A ASSY		3	4					KB00G773G03		
303	E17 320 129	G	FAN CASE B ASSY		3	4					KB00G774G03		
304	E17 319 500	G	SIROCCO FAN ASSY		3	4					KB00H341G01		
305	E17 C45 505	G	RUBBER MOUNT A		1	1					KJ31H007H01		Chg.
306	E17 C46 505	G	RUBBER MOUNT B		1	1					KJ31H008H01		Chg.
307	KB02H047G02	G	ATTACHMENT		2	2					KB02H047G02		
308	E17 C46 300	G	MOTOR	SIC-70CW-D896-2E	1	1					KS00T859G07	*2 Includes rubber mounts	Chg.
309	E17 321 509	G	BEARING		1	1					KB58C793G01		
310	E17 321 499	G	SHAFT 3FAN		1						KB10B485H03		
311	E17 326 499	G	SHAFT 4FAN			1					KB10B486H03		
312	E17 321 518	G	FAN JOINT ASSY		1	1					KB00R475G01		

CONTROL BOX PARTS

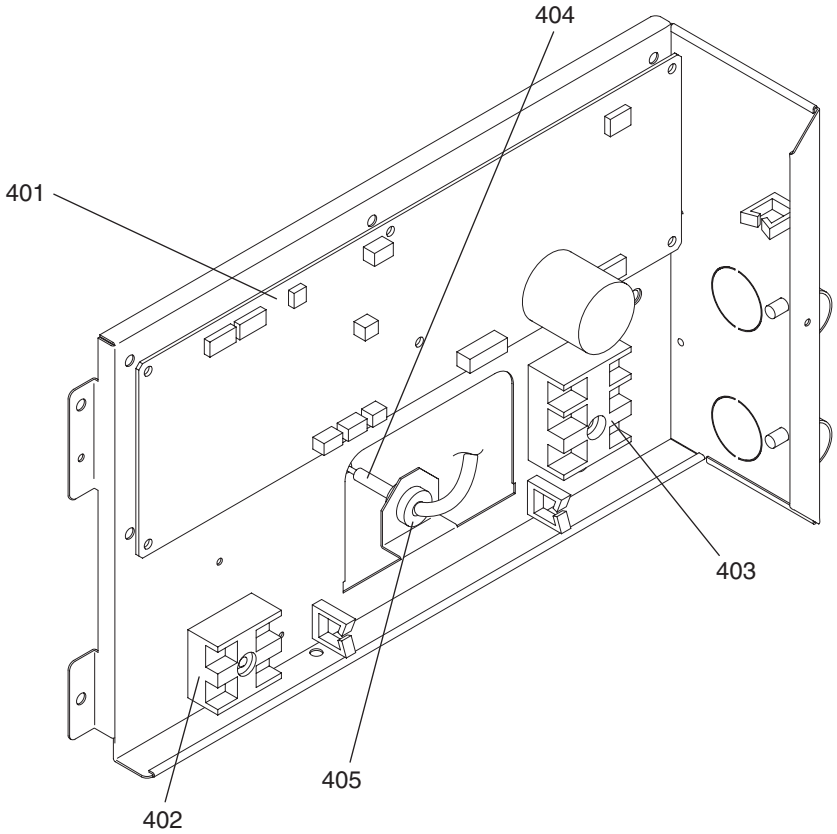

CONTROL BOX PARTS

No.	Part No.	G : RoHS Apply Only W : RoHS Apply by Running Change	Part Name	Spec.	SEZ-KD09NA4.TH	SEZ-KD12NA4.TH	SEZ-KD15NA4.TH	SEZ-KD18NA4.TH			Dwg. No.	Notes for the models	Revision info.
401	E17 679 447	G	PRINTED CIRCUIT ASSEMBLY	INDOOR	1	1	1	1			KE01D279B04		
402	E17 156 375	G	TERMINAL BLOCK ASSY		1	1	1	1			BG00R200G62		
403	E17 162 375	G	TERMINAL BLOCK ASSY		1	1	1	1			BH00C267G02		
404	E17 319 308	G	THERMISTOR S	250XAP	1	1	1	1			RG71J628H01		
405	E17 319 013	G	BUSH	SRB-R-2	1	1	1	1			KB32K138H01		

MITSUBISHI ELECTRIC CORPORATION

BWE1018A (20161231)