MITSUBISHI ELECTRIC

SPLIT-SYSTEM HEAT PUMP
SLZ-KF09, KF12, KF15, KF18NA

INSTALLATION MANUAL

FOR INSTALLER

For safe and correct use, please read this manual and the outdoor unit installation manual thoroughly before installing the air-conditioner unit.

English

MANUEL D'INSTALLATION

POUR L'INSTALLATEUR

Avant d'installer le climatiseur, lire attentivement ce manuel, ainsi que le manuel d'installation de l'appareil extérieur pour une utilisation sûre et correct.

Français

MANUAL DE INSTALACIÓN

PARA EL INSTALADOR

Para un uso seguro y correcto, lea detalladamente este manual de instalación antes de montar la unidad de aire acondicionado.

Español

Contents

1. Safety precautions 2
2. Selecting the installation location 2
3. Installation diagram 3
4. Installing the indoor unit 3
5. Refrigerant piping work 5
6. Drainage piping work 7
7. Electrical work 8
8. Test run 14
9. System control 16
10. Installing the grille 16
11. Easy maintenance function 19

Note:
The phrase "Wired remote controller" in this installation manual refers only to the PAR-33MAA. If you need any information for the other remote controller, please refer to either the installation manual or initial setting manual which are included in these boxes.

1. Safety precautions

- **Be sure to read "Safety precautions" before installing the air conditioner.**
- **Be sure to observe the cautions specified here as they include important items related to safety.**
- **The indications and meanings are as follows.**

⚠ **Warning:**
Could lead to death, serious injury, etc.

⚠ **Caution:**
Could lead to serious injury in particular environments when operated incorrectly.

- **After reading this manual, be sure to keep it together with the instruction manual in a handy place on the customer's site.**

⏚ : Indicates a part which must be grounded.

⚠ **Warning:**
Carefully read the labels affixed to the main unit.
Install the indoor unit at least 2.4 m (8 ft) above floor or grade level.
For appliances not accessible to the general public.

⚠ **Warning:**
- **Do not install it by yourself (customer).**
  Incomplete installation could cause injury due to fire, electric shock, the unit falling or leakage of water. Consult the dealer from whom you purchased the unit or special installer.
- **Install the unit securely in a place which can bear the weight of the unit.**
  When installed in an insufficient strong place, the unit could fall causing injured.
- **Use the specified wires to connect the indoor and outdoor units securely and attach the wires firmly to the terminal board connecting sections so the stress of the wires is not applied to the sections.**
  Incomplete connecting and fixing could cause fire.
- **Do not use intermediate connection of the power cord or the extension cord and do not connect many devices to one AC outlet.**
  It could cause a fire or an electric shock due to defective contact, defective insulation, exceeding the permissible current, etc.
- **Check that the refrigerant gas does not leak after installation has completed.**
- **Perform the installation securely referring to the installation manual.**
  Incomplete installation could cause a personal injury due to fire, electric shock, the unit falling or leakage of water.
- **Perform electrical work according to the installation manual and be sure to use an exclusive circuit.**
  If the capacity of the power circuit is insufficient or there is incomplete electrical work, it could result in a fire or an electric shock.
- **The user should never attempt to repair the unit or transfer it to another location.**
- **The appliance shall be installed in accordance with national wiring regulations.**
- **If the supply cord is damaged, it must be replaced by the manufacturer, its service agent or similarly qualified persons in order to avoid a hazard.**
- **Attach the electrical part cover to the indoor unit and the service panel to the outdoor unit securely.**
  If the electrical part cover in the indoor unit and/or the service panel in the outdoor unit are not attached securely, it could result in a fire or an electric shock due to dust, water, etc.
- **Be sure to use the part provided or specified parts for the installation work.**
  The use of defective parts could cause an injury or leakage of water due to a fire, an electric shock, the unit falling, etc.
- **Ventilate the room if refrigerant leaks during operation.**
  If the refrigerant comes in contact with a flame, poisonous gases will be released.
- **When installing or relocating, or servicing the air conditioner, use only the specified refrigerant (R410A) to charge the refrigerant lines. Do not mix it with any other refrigerant and do not allow air to remain in the lines.**
  If air is mixed with the refrigerant, then it can be the cause of abnormal high pressure in the refrigerant line, and may result in an explosion and other hazards.
  The use of any refrigerant other than that specified for the system will cause mechanical failure or system malfunction or unit breakdown. In the worst case, this could lead to a serious impediment to securing product safety.

⚠ **Caution:**
- **Perform grounding.**
  Do not connect the ground wire to a gas pipe, water pipe arrester or telephone ground wire. Defective grounding could cause an electric shock.
- **Do not install the unit in a place where an inflammable gas leaks.**
  If gas leaks and accumulates in the area surrounding the unit, it could cause an explosion.
- **Install a ground leakage breaker depending on the installation place (where it is humid).**
  If a ground leakage breaker is not installed, it could cause an electric shock.
- **Perform the drainage/piping work securely according to the installation manual.**
  If there is a defect in the drainage/piping work, water could drop from the unit and household goods could be wet and damaged.
- **Fasten a flare nut with a torque wrench as specified in this manual.**
  When fastened too tight, a flare nut may broken after a long period and cause a leakage of refrigerant.
- **If the unit is run for long hours when the air above the ceiling is at high temperature/high humidity (dew point above 26 ºC, 79 ºF), dew condensation may be produced in the indoor unit or the ceiling materials. When operating the units in this condition, add insulation material (10 to 20 mm, 13/32 to 15/32 in) to the entire surface of the unit and ceiling materials to avoid dew condensation.**

2. Selecting the installation location

2.1. Indoor unit

- Where airflow is not blocked.
- Where cool air spreads over the entire room.
- Where it is not exposed to direct sunshine.
- At a distance 1 m (3 ft) or more away from your TV and radio (to prevent picture from being distorted or noise from being generated).
- In a place as far away as possible from fluorescent and incandescent lights (so the infrared remote control can operate the air conditioner normally).
- Where the air filter can be removed and replaced easily.

⚠ **Warning:**
Mount the indoor unit into a ceiling strong enough to withstand the weight of the unit.

2.2. Wireless remote controller mounting (For PAR-SF9FA-E*)

- Place of mounting
  - Where it is easy to operate and easily visible.
  - Where children can not touch.
- Mounting
  Select a position about 1.2 m (4 ft) above the floor, check that signals from the remote controller are surely received by the indoor unit from that position ('beep' or 'beep-beep' receiving tone sounds). After that, attach remote controller holder to a pillar or wall and set the wireless remote controller.

In rooms where inverter type fluorescent lamps are used, the signal from the wireless remote controller may not be received.

3. Installation diagram

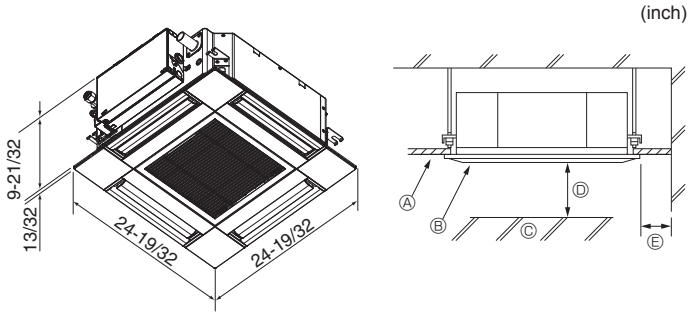

Fig. 3-1

3.1. Indoor unit (Fig. 3-1)

Ⓐ Ceiling
Ⓑ Grille
Ⓒ Obstacle
Ⓓ Min. 1000 mm (40 inch)
Ⓔ Min. 500 mm (20 inch) (Entire periphery)
If setting the maintenance space for Ⓔ, be sure to leave is a minimum of 700 mm (28 inch).

⚠ **Warning:**
Mount the indoor unit on a ceiling strong enough to withstand the weight of the unit.

3.2. Outdoor unit

Refer to the outdoor unit installation manual.

4. Installing the indoor unit

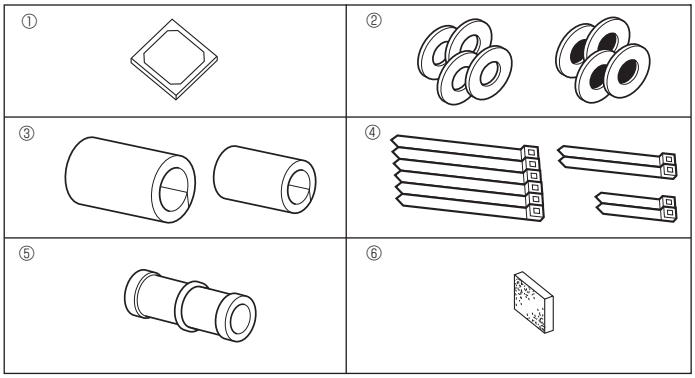

Fig. 4-1

4.1. Check the indoor unit accessories (Fig. 4-1)

The indoor unit should be supplied with the following accessories.

	Accessory name	Q'ty
①	Installation template	1
②	Washers (with insulation) Washers (without insulation)	4 4
③	Pipe cover (for refrigerant piping joint) small diameter (liquid) large diameter (gas)	 1 1
④	Band (large) Band (middle) Band (small)	6 2 2
⑤	Drain socket	1
⑥	Insulation	1

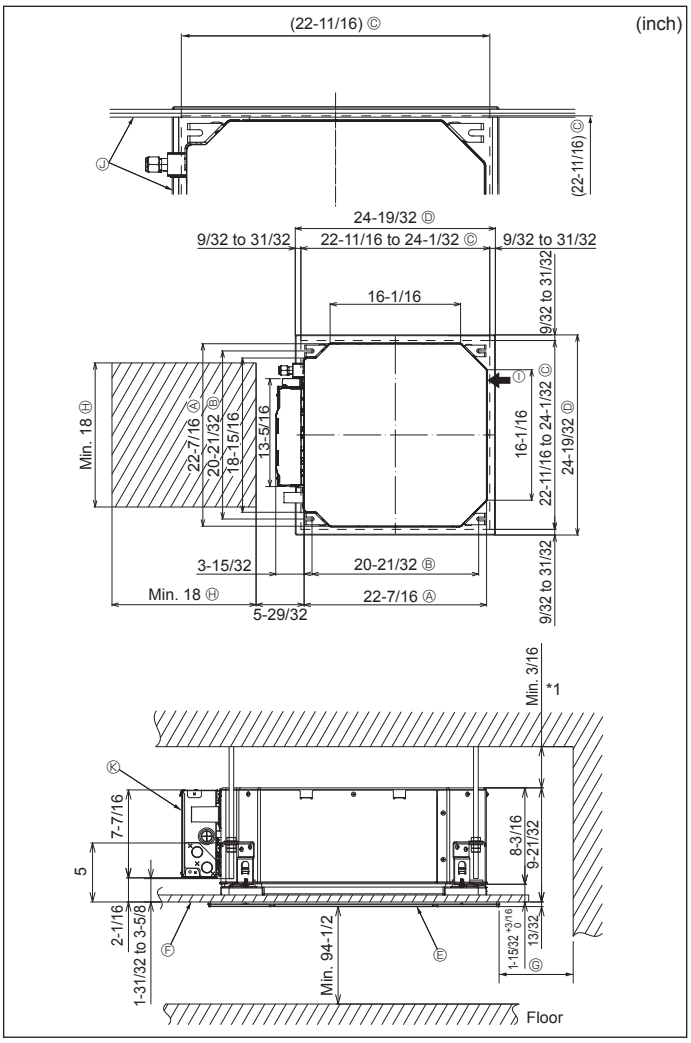

Fig. 4-2

4.2. Ceiling openings and suspension bolt installation locations (Fig. 4-2)

⚠ **Caution:**
Install the indoor unit at least 2.4 m (8 ft) above floor or grade level.
For appliances not accessible to the general public.

- Using the installation template and the gauge (supplied as an accessory with the grille), make an opening in the ceiling so that the main unit can be installed as shown in the diagram. (The method for using the template and the gauge are shown.)
  * Before using, check the dimensions of template and gauge, because they change due to fluctuations of temperature and humidity.
  * The dimensions of ceiling opening can be regulated within the range shown in following diagram; so center the main unit against the opening of ceiling, ensuring that the respective opposite sides on all sides of the clearance between them becomes identical.
- Use M10 (3/8") suspension bolts.
  * Suspension bolts are to be procured at the field.
- Install securely, ensuring that there is no clearance between the ceiling panel & grille, and between the main unit & grille.

Ⓐ Outer side of main unit
Ⓑ Bolt pitch
Ⓒ Ceiling opening
Ⓓ Outer side of Grille
Ⓔ Grille
Ⓕ Ceiling
Ⓖ Min. 500 mm (20 inch) (Entire periphery)
If setting the maintenance space for Ⓖ, be sure to leave is a minimum of 700 mm (28 inch).
Ⓗ Maintenance space
Ⓘ Fresh air intake
Ⓙ Angle
Ⓚ Electric component box

* Leave the maintenance space at the electric component box end.

*1 When installing in an existing ceiling unit location or applying additional heat insulation, ensure a minimum space of 25 mm (1 inch).

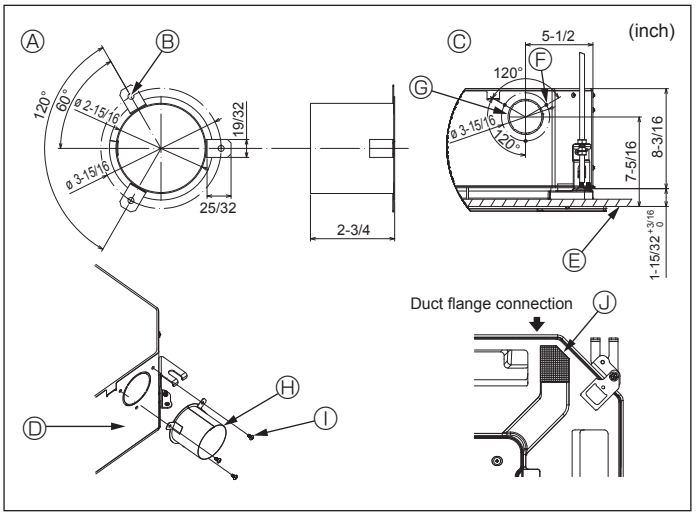

Fig. 4-3

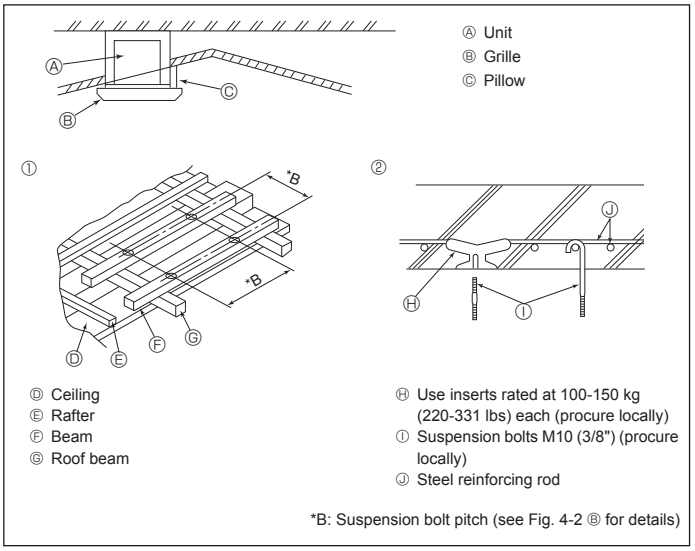

Fig. 4-4

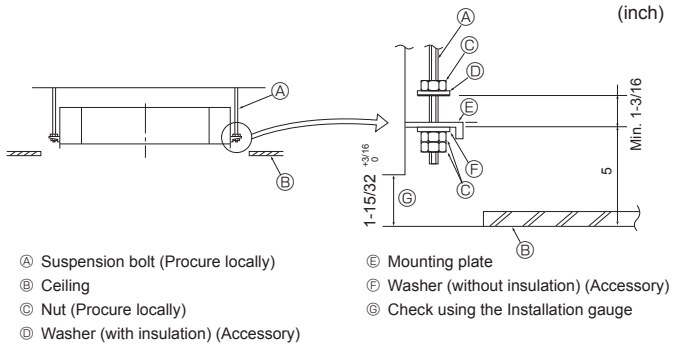

Fig. 4-5

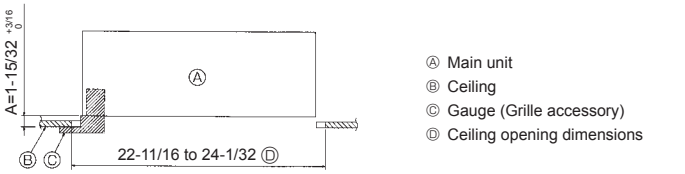

Fig. 4-6

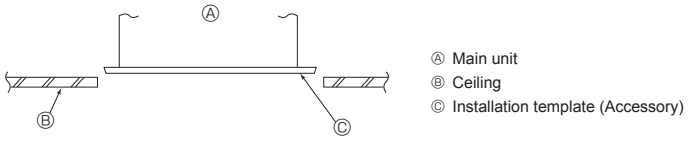

Fig. 4-7

4.3. Installation of duct (in case of fresh air intake) (Fig. 4-3)

⚠ **Caution:**

Linkage of duct fan and air conditioner

In case that a duct fan is used, be sure to make it linked with the air conditioner when outside air is taken.

Do not run the duct fan only. It can cause dew drop.

Making a duct flange (prepared locally)

- The shape of duct flange shown left is recommended.

Installation of duct flange

- Cut out the cutout hole. Do not knock it out.
- Install a duct flange to the cutout hole of the indoor unit with three 4 × 10 mm tapping screws which should be prepared locally.

Installation of duct (should be prepared locally)

- Prepare a duct of which inner diameter fits into the outer diameter of the duct flange.
- In case that the environment above the ceiling is high temperature and high humidity, wrap the duct in a heat insulate to avoid causing dew drop on the wall.

Remove the drain pan insulation.

Ⓐ Duct flange recommended shape (Thickness:0.8 mm (1/32 inch) or more)
Ⓑ 3-ø5 mm (3/16 inch) hole
Ⓒ Detail drawing of fresh air intake
Ⓓ Indoor unit
Ⓔ Ceiling surface
Ⓕ 3-Tapping screw hole
Ⓖ ø73.4 mm (2-7/8 inch) cutout hole
Ⓗ Duct flange (Prepared locally)
Ⓘ 4 × 10 mm Tapping screw (Prepared locally)
Ⓙ Insulation

4.4. Suspension structure (Give site of suspension strong structure) (Fig. 4-4)

- The ceiling work differs according to the construction of the building. Building constructors and interior decorators should be consulted for details.

(1) Extent of ceiling removal: The ceiling must be kept completely horizontal and the ceiling foundation (framework: wooden slats and slat holders) must be reinforced in order to protect the ceiling from vibration.
(2) Cut and remove the ceiling foundation.
(3) Reinforce the ends of the ceiling foundation where it has been cut and add ceiling foundation for securing the ends of the ceiling board.
(4) When installing the unit on a slanting ceiling, interlock a pillow between the ceiling and the grille and set so that the unit is installed horizontally.

① Wooden structures

- Use tie beams (single-story houses) or second floor beams (two story houses) as reinforcing members.
- Wooden beams for suspending air conditioners must be sturdy and their sides must be at least 6 cm (2-3/8 inch) long if the beams are separated by not more than 90 cm (36 inch) and their sides must be at least 9 cm (3-9/16 inch) long if the beams are separated by as much as 180 cm (71 inch). The size of the suspension bolts should be ø10 (3/8"). (The bolts do not come with the unit.)

② Ferroconcrete structures

Secure the suspension bolts using the method shown, or use steel or wooden hangers, etc. to install the suspension bolts.

4.5. Unit suspension procedures (Fig. 4-5)

Suspend the main unit as shown in the diagram.

1. In advance, set the parts onto the suspension bolts in the order of the washers (with insulation), washers (without insulation) and nuts (double).
   - Fit the washer with cushion so that the insulation faces downward.
   - In case of using upper washers to suspend the main unit, the lower washers (with insulation) and nuts (double) are to be set later.
2. Lift the unit to the proper height of the suspension bolts to insert the mounting plate between washers and then fasten it securely.
3. When the main unit can not be aligned against the mounting hole on the ceiling, it is adjustable owing to a slot provided on the mounting plate. (Fig. 4-6)
   - Make sure that step A is performed within 37-42 mm (1-15/32 to 1-21/32 inch). Damage could result by failing to adhere to this range.

4.6. Confirming the position of main unit and tightening the suspension bolts (Fig. 4-7)

- Using the gauge attached to the grille, ensure that the bottom of the main unit is properly aligned with the opening of the ceiling. Be sure to confirm this, otherwise condensation may form and drip due to air leakage etc.
- Confirm that the main unit is horizontally levelled, using a level or a vinyl tube filled with water.
- After checking the position of the main unit, tighten the nuts of the suspension bolts securely to fasten the main unit.
- The installation template can be used as a protective sheet to prevent dust from entering the main unit when the grilles are left unattached for a while or when the ceiling materials are to be lined after installation of the unit is finished.

* As for the details of fitting, refer to the instructions given on the Installation template.

5. Refrigerant piping work

5.1. Precautions

For devices that use R410A refrigerant

- **Use alkylbenzene oil (small amount) as the refrigeration oil applied to the flared sections.**
- **Use C1220 copper phosphorus for copper and copper alloy seamless pipes, to connect the refrigerant pipes. Use refrigerant pipes with the thicknesses specified in the table below. Make sure the insides of the pipes are clean and do not contain any harmful contaminants such as sulfuric compounds, oxidants, debris, or dust.**

⚠ Warning:

When installing or relocating, or servicing the air conditioner, use only the specified refrigerant written on outdoor unit to charge the refrigerant lines. Do not mix it with any other refrigerant and do not allow air to remain in the lines.

If air is mixed with the refrigerant, then it can be the cause of abnormal high pressure in the refrigerant line, and may result in an explosion and other hazards.

The use of any refrigerant other than that specified for the system will cause mechanical failure or system malfunction or unit breakdown. In the worst case, this could lead to a serious impediment to securing product safety.

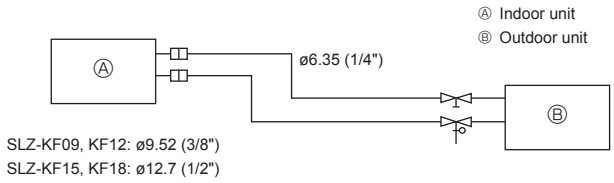

Fig. 5-1

5.2. Refrigerant pipe (Fig. 5-1)

Piping preparation

(1) Table below shows the specifications of pipes commercially available.

Model	Pipe	Outside diameter		Min. wall thickness	Insulation thickness	Insulation material
		mm	inch			
SLZ-KF09 SLZ-KF12	For liquid	6.35	1/4	0.8 mm (1/32 inch)	8 mm (10/32 inch)	Heat resisting foam plastic 0.045 specific gravity
	For gas	9.52	3/8	0.8 mm (1/32 inch)	8 mm (10/32 inch)	
SLZ-KF15 SLZ-KF18	For liquid	6.35	1/4	0.8 mm (1/32 inch)	8 mm (10/32 inch)	
	For gas	12.7	1/2	0.8 mm (1/32 inch)	8 mm (10/32 inch)	

(2) Ensure that the 2 refrigerant pipes are well insulated to prevent condensation.

(3) Refrigerant pipe bending radius must be 100 mm (4 inch) or more.

⚠ Caution:

Using careful insulation of specified thickness. Excessive thickness prevents storage behind the indoor unit and smaller thickness causes dew drippage.

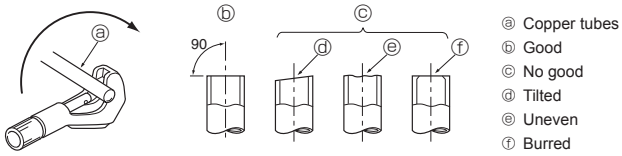

Fig. 5-2

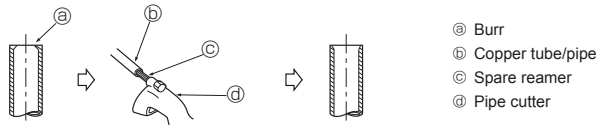

Fig. 5-3

Fig. 5-4

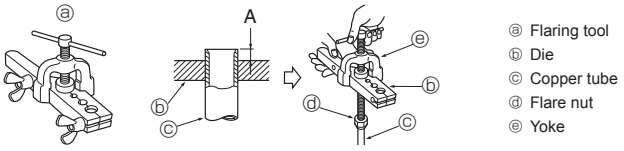

Fig. 5-5

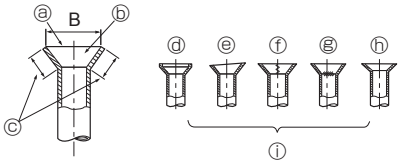

Fig. 5-6

5.3. Flaring work

- Main cause of gas leakage is defect in flaring work.
  Carry out correct flaring work in the following procedure.

5.3.1. Pipe cutting (Fig. 5-2)

- Using a pipe cutter cut the copper tube correctly.

5.3.2. Burrs removal (Fig. 5-3)

- Completely remove all burrs from the cut cross section of pipe/tube.
- Put the end of the copper tube/pipe to downward direction as you remove burrs in order to avoid burrs drop in the tubing.

5.3.3. Putting nut on (Fig. 5-4)

- Remove flare nuts attached to indoor and outdoor unit, then put them on pipe/tube having completed burr removal.
  (not possible to put them on after flaring work)

5.3.4. Flaring work (Fig. 5-5)

- Carry out flaring work using flaring tool as shown at the right.

Pipe diameter (mm, inch)	Dimension	
	A (mm, inch)	B $^{+0}_{-0.4}$, 1/64 (mm, inch)
	When the tool for R410A is used	
	Clutch type	
6.35, 1/4"	0 to 0.5, 0 to 1/64	9.1, 11/32
9.52, 3/8"	0 to 0.5, 0 to 1/64	13.2, 17/32
12.7, 1/2"	0 to 0.5, 0 to 1/64	16.6, 21/32

Firmly hold copper tube in a die in the dimension shown in the table at above.

5.3.5. Check (Fig. 5-6)

- Compare the flared work with a figure in right side hand.
- If flare is noted to be defective, cut off the flared section and do flaring work again.

ⓐ Smooth all around
ⓑ Inside is shining without any scratches
ⓒ Even length all around
ⓓ Too much
ⓔ Tilted
ⓕ Scratch on flared plane
ⓖ Cracked
ⓗ Uneven
ⓘ Bad examples

(inch)

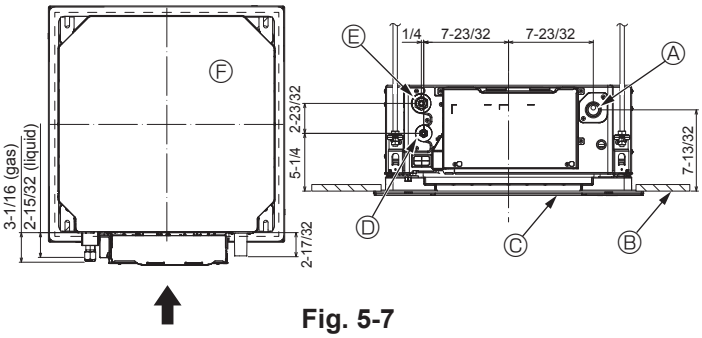

Fig. 5-7

5.4. Refrigerant and drainage piping locations (Fig. 5-7)

Ⓐ Drain pipe
Ⓑ Ceiling
Ⓒ Grille
Ⓓ Refrigerant pipe (liquid)
Ⓔ Refrigerant pipe (gas)
Ⓕ Main unit

Model	Dimension (mm, inch)	
	A (liquid)	B (gas)
SLZ-KF09 SLZ-KF12	63, 2-15/32	72, 2-27/32
SLZ-KF15 SLZ-KF18	63, 2-15/32	78, 3-1/16

5.5. Pipe connection (Fig. 5-8)

Indoor unit

1) When using commercially available copper pipes:

- Apply thin layer of refrigerant oil to pipe and joint seating surface before tightening flare nut.
- Use two wrenches to tighten piping connections.
- Air-purge the refrigerant piping using your own refrigerant gas (don't air-purge the refrigerant charged in the outdoor unit).
- Use leak detector or soapy water to check for gas leaks after connections are completed.
- Use flared nut installed to this indoor unit.
- In case of reconnecting the refrigerant pipes after detaching, make the flared part of pipe re-fabricated.
- Use refrigerant piping insulation provided to insulate indoor unit connections. Insulate carefully following shown below.

2) Heat insulation for refrigerant pipes:

① Wrap the enclosed large-sized pipe cover around the gas pipe, making sure that the end of the pipe cover touches the side of the unit.
② Wrap the enclosed small-sized pipe cover around the liquid pipe, making sure that the end of the pipe cover touches the side of the unit.
③ Secure both ends of each pipe cover with the enclosed bands. (Attach the bands 20 mm (25/32 inch) from the ends of the pipe cover.)

Make sure that the slit in the pipe cover is facing upward when it is installed.

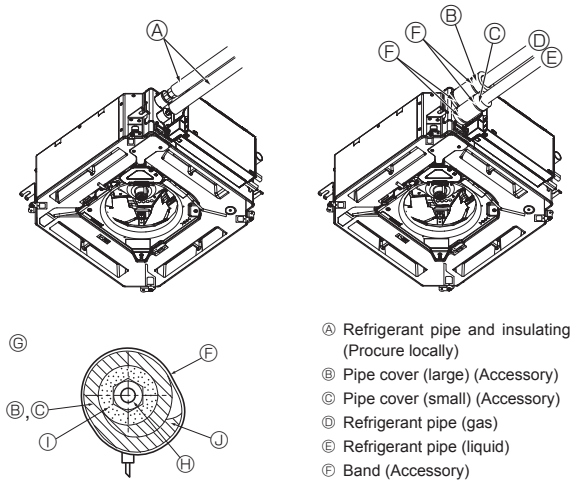

Ⓐ Refrigerant pipe and insulating material (Procure locally)
Ⓑ Pipe cover (large) (Accessory)
Ⓒ Pipe cover (small) (Accessory)
Ⓓ Refrigerant pipe (gas)
Ⓔ Refrigerant pipe (liquid)
Ⓕ Band (Accessory)
Ⓖ Cross-sectional view of connection
Ⓗ Refrigerant pipe
Ⓘ Insulating material
Ⓙ Squeeze

Fig. 5-8

See that stop valve on outdoor unit is fully shut (unit is shipped with valve shut). After all piping connections between indoor and outdoor unit have been completed, vacuum-purge air from system through the service port for the stop valve on the outdoor unit. After completing procedures above, open outdoor unit stop valves stem fully. This completes connection of refrigerant circuit between indoor and outdoor units. Stop valve instructions are marked on outdoor unit.

Flare nut tightening

- Apply a thin coat of refrigeration oil on the seat surface of pipe. (Fig. 5-9)
- For connection first align the center, then tighten the first 3 to 4 turns of flare nut.
- Use tightening torque table below as a guideline for indoor unit side union joint section, and tighten using two wrenches. Excessive tightening damages the flare section.

Ⓐ Apply refrigerating machine oil over the entire flare seat surface.
Ⓑ Use correct flare nuts meeting the pipe size of the outdoor unit.
Ⓒ Flare nut tightening torque

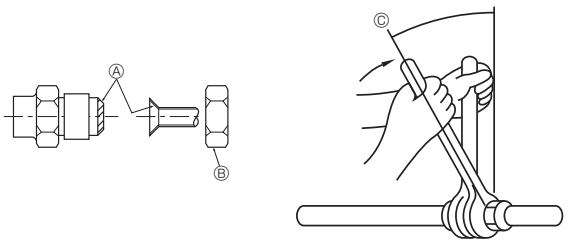

Fig. 5-9

Copper pipe O.D. (mm, inch)	Flare nut O.D. (mm, inch)	Tightening torque (N·m, ft·lbs)
ø6.35, 1/4	17, 21/32	14 to 18, 10 to 13
ø9.52, 3/8	22, 7/8	34 to 42, 25 to 31
ø12.7, 1/2	26, 1-1/32	49 to 61, 36 to 45

6. Drainage piping work

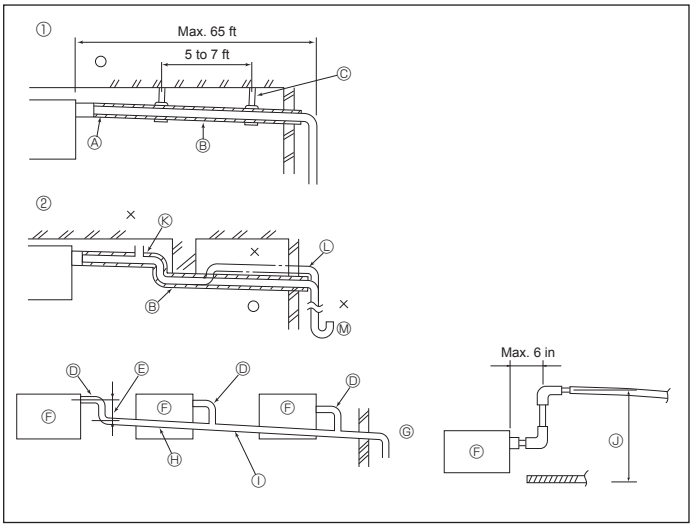

Fig. 6-1

6.1. Drainage piping work (Fig. 6-1)

- Use VP25 (O. D. ø32 mm (1-1/4 inch) PVC TUBE) for drain piping and provide 1/100 or more downward slope.
- Be sure to connect the piping joints using a polyvinyl type adhesive.
- Observe the figure for piping work.
- Use the included drain hose to change the extraction direction.

① Correct piping
② Wrong piping
Ⓐ Insulation (9 mm (11/32 inch) or more)
Ⓑ Downward slope (1/100 or more)
Ⓒ Support metal
Ⓚ Air bleeder
Ⓛ Raised
Ⓜ Odor trap

Grouped piping

Ⓓ O. D. ø32 mm (1-1/4 inch) PVC TUBE
Ⓔ Make it as large as possible
Ⓕ Indoor unit
Ⓖ Make the piping size large for grouped piping.
Ⓗ Downward slope (1/100 or more)
Ⓘ O. D. ø38 mm (1-1/2 inch) PVC TUBE for grouped piping (9 mm (11/32 inch) or more insulation)
Ⓙ Up to 850 (33 inch)

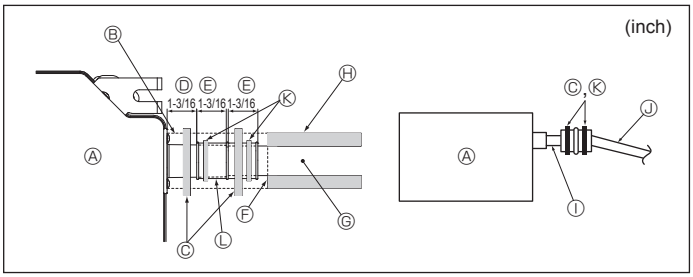

Fig. 6-2

1. Connect the drain socket (supplied with the unit) to the drain port. (Fig. 6-2) (Affix the tube using PVC adhesive then secure it with a band.)
2. Install a locally purchased drain pipe (PVC pipe, O.D. ø32 mm (1-1/4 inch)). (Affix the pipe using PVC adhesive then secure it with a band.)
3. Insulate the tube and pipe. (PVC pipe, O.D. ø32 mm (1-1/4 inch) and socket)
4. Check that drain flows smoothly.
5. Insulate the drain port with insulating material, then secure the material with a band. (Both insulating material and band are supplied with the unit.)

Ⓐ Main unit
Ⓑ Insulating material
Ⓒ Band (large)
Ⓓ Drain port (transparent)
Ⓔ Insertion margin
Ⓕ Matching
Ⓖ Drain pipe (O.D. ø32 mm (1-1/4 inch) PVC TUBE)
Ⓗ Insulating material (purchased locally)
Ⓘ Transparent PVC pipe
Ⓙ O.D. ø32 mm (1-1/4 inch) PVC TUBE (Slope 1/100 or more)
Ⓚ Band (middle)
Ⓛ Drain socket

7. Electrical work

7.1. Indoor unit power supplied from outdoor unit

The following connection patterns are available.
The outdoor unit power supply patterns vary on models.

1:1 System

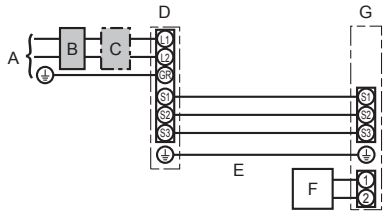

A Outdoor unit power supply
B Earth leakage breaker
C Wiring circuit breaker or isolating switch
D Outdoor unit
E Indoor unit/outdoor unit connecting cables
F Remote controller
G Indoor unit

Indoor unit model			SLZ
Wiring Wire No. × size (mm^2)	Indoor unit-Outdoor unit	*1	3 × AWG16 (polar)
	Indoor unit-Outdoor unit earth	*1	1 × Min. AWG16
	Indoor unit earth		1 × Min. AWG16
	Remote controller-Indoor unit	*2	2 × AWG22 (Non-polar)
Circuit rating	Indoor unit (Heater) L-N	*3	—
	Indoor unit-Outdoor unit S1-S2	*3	208/230 VAC
	Indoor unit-Outdoor unit S2-S3	*3	24 VDC
	Remote controller-Indoor unit	*3	12 VDC

*1. <For 09-18 outdoor unit application>
Max. 45 m, 148 ft
If AWG13 (2.5 mm^2) used, Max. 50 m, 165 ft
If AWG13 (2.5 mm^2) used and S3 separated, Max. 80 m, 263 ft
*2. Max. 500 m, 1640 ft.
(When using 2 remote controllers, the maximum wiring length for the remote controller cables is 200 m, 656 ft.)
*3. The figures are NOT always against the ground.
S3 terminal has 24 VDC against S2 terminal. However between S3 and S1, these terminals are not electrically insulated by the transformer or other device.

Notes:
1. **Wiring size must comply with the applicable local and national code.**
2. **Power supply cords and indoor unit/outdoor unit connecting cords shall not be lighter than polychloroprene sheathed flexible cord. (Design 60245 IEC 57)**
3. **Install an earth longer than other cables.**
4. **Indoor and outdoor connecting wires have polarities. Make sure to match the terminal number (S1, S2, S3) for correct wirings.**
5. **Wiring for remote controller cable shall be apart (5 cm, 2 inch or more) from power source wiring so that it is not influenced by electric noise from power source wiring.**

⚠ **Warning:**

Never splice the power cable or the indoor-outdoor connection cable, otherwise it may result in a smoke, a fire or communication failure.

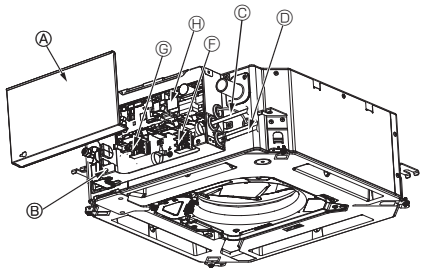

Ⓐ Electric component cover
Ⓑ Electric component box
Ⓒ Entry for Indoor-Outdoor connecting cable
Ⓓ Entry for wired remote controller cable
Ⓔ Cable clamp
Ⓕ Indoor/Outdoor unit connecting terminal
Ⓖ Wired remote controller terminal
Ⓗ Indoor controller
Ⓘ Earth cable

Fig. 7-1

7.2. Indoor unit (Fig. 7-1) (Fig. 7-2) (Fig. 7-3)

Work procedure

1. Loosen the two screws securing the electric component cover, and then slide and remove the cover.
2. Route the wires along the wiring routes and through the wire inlets in the electric component box.
   (Procure the power supply cord and indoor/outdoor unit connecting cable locally.)
3. Securely connect the power supply cord and the indoor/outdoor unit connecting cable to the terminal block.
4. Secure the wires with the cable straps inside the electric component box.
   Secure the wires with cable straps as cushioning components so that no stress is applied to the connecting sections of the terminal block when tension is generated.
5. Install the electric component cover.
   Make sure that the wires do not get pinched.

- Do not allow slackening of the terminal screws.
- Tape is affixed over the conduit hole used for connecting the electric wiring.
  Please remove this tape if making a connection through the hole.

⚠ **Warning:**

- **Insert hook the electric component cover into the bent support on the electric component box and attach the cover securely. If it is attached incorrectly, it could result in a fire, electric shock due to dust, water, etc.**
- **Use the specified indoor/outdoor unit connecting cable to connect the indoor and outdoor units and fix the cable to the terminal block securely so that no stress is applied to the connecting section of the terminal block. Incomplete connection or fixing of the cable could result in a fire.**

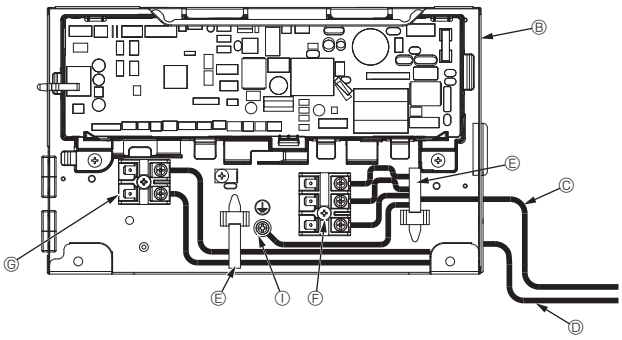

Fig. 7-2

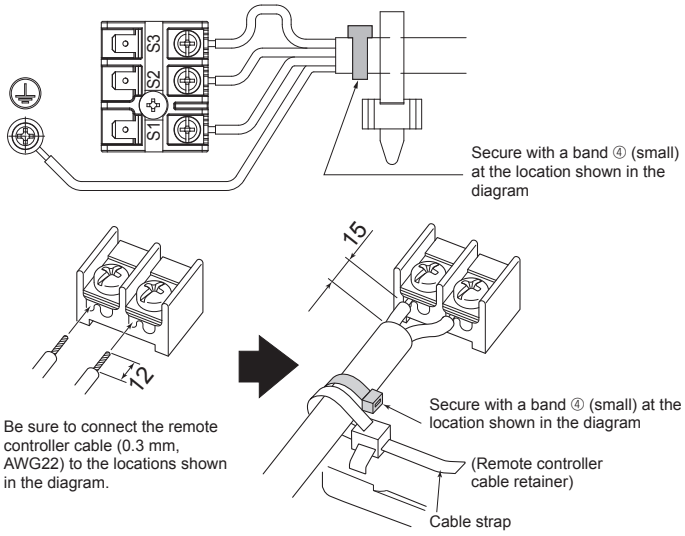

Fig. 7-3

⚠ **Caution:**

- **Before installing the grille, make sure that the junction wire is connected.**
- **If the grille has signal receiver or i-See sensor, the pack of grille includes junction wire.**

Signal receiver:	**CN90**
3D i-See sensor:	**CN5Y**
3D i-See sensor motor:	**CN4Z**

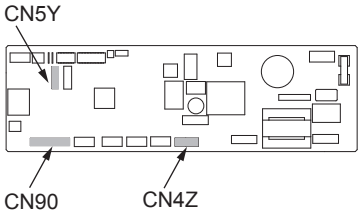

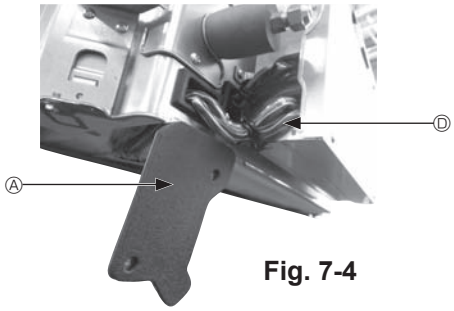

Fig. 7-4

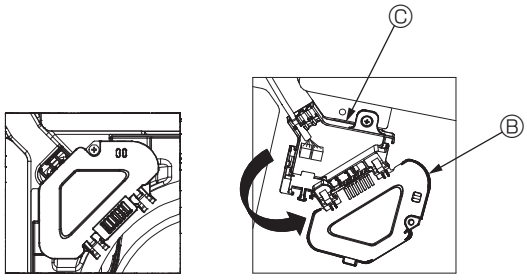

Fig. 7-5

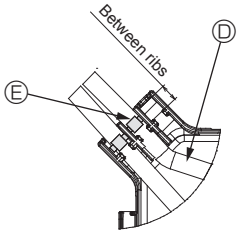

Fig. 7-6

7.2.1. Installing the i-See sensor and signal receiver

Before installing the grille, connect the junction wires included with the grille accessories and place them in the connector box.

① Remove the two screws securing the wire cover of the main unit, and then open the cover.

② Route the wires of the i-See sensor and signal receiver through the wire inlets in the electric component box as shown in the diagram and around the bushings on the side of the main unit. (Fig. 7-4)
When routing the wires, open the clamp securing the grille junction wire, and then secure the grille junction wire and the wires of the i-See sensor and signal receiver with the clamp.

③ Remove the one screw securing the connector box cover, and then open the cover. (Fig. 7-5)

④ Place the junction wire connector in the connector box.

⑤ Install the wire cover and connector box cover.

⚠ **Caution:**

When installing the covers, make sure that the wires do not get pinched.
Fit the band securing the junction wires between the ribs on the connector box as shown in the diagram. (Fig. 7-6)

Ⓐ Wire cover
Ⓑ Connector box cover
Ⓒ Connector box
Ⓓ i-See sensor or signal receiver lead wire (Grille accessory)
Ⓔ Band

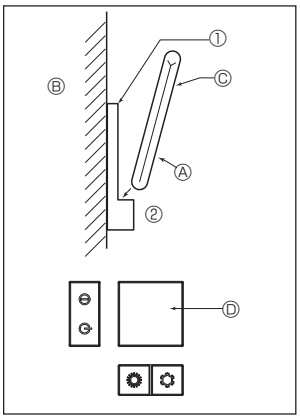

Fig. 7-7

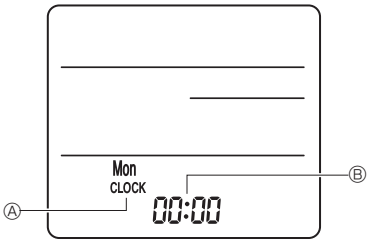

Fig. 7-8

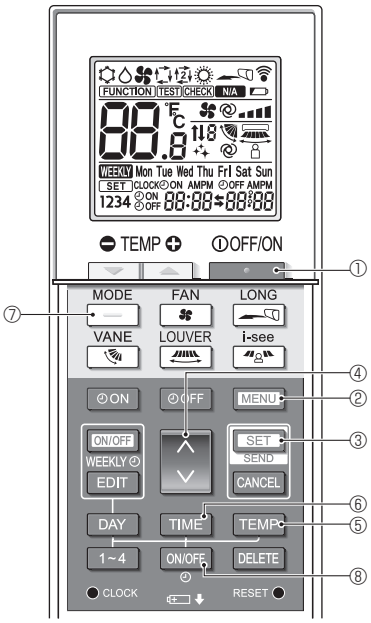

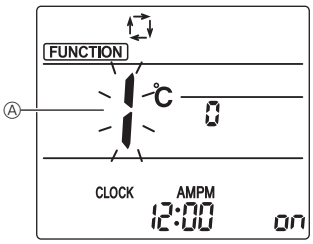

Fig. 7-9

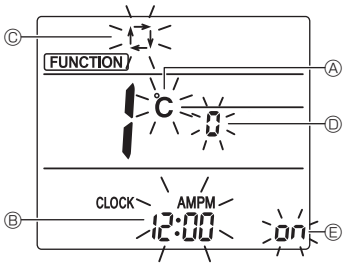

Fig. 7-10

7.3. Remote controller

When using a wired remote controller together with a wireless remote controller, use the following wireless remote controller.

7.3.1. Wired remote controller

1) Installing procedures

Refer to the installation manual that comes with each remote controller for details.

2) Function selection of remote controller

If two remote controllers are connected, set one to “Main” and the other to “Sub”. For setting procedures, refer to “Function selection of remote controller” in the operation manual for the indoor unit.

7.3.2. For wireless remote controller

1) Installation area

- Area in which the remote controller is not exposed to direct sunshine.
- Area in which there is no nearby heating source.
- Area in which the remote controller is not exposed to cold (or hot) winds.
- Area in which the remote controller can be operated easily.
- Area in which the remote controller is beyond the reach of children.

2) Installation method (Fig. 7-7)

① Attach the remote controller holder to the desired location using 2 tapping screws.
② Place the lower end of the controller into the holder.
Ⓐ Remote controller Ⓑ Wall Ⓒ Display panel Ⓓ Receiver

- The signal can travel up to approximately 7 meters, 23 feet (in a straight line) within 45 degrees to both right and left of the center line of the receiver.

3) Setting (Clock setting) (Fig. 7-8)

1. Insert batteries or press the ● CLOCK button with something sharp.
   [CLOCK] Ⓐ and [:] Ⓑ blinks.
2. Press the RESET ● button with something sharp.
3. Press the button to set the time.
   Press the DAY button to set the Day.
4. Press the ● CLOCK button with something sharp at the end.
   [CLOCK] and [:] lighted.

4) Initial setting

The following settings can be made in the initial setting mode.

Item	Setting	Fig. 7-10
Temperature unit	°C/°F	Ⓐ
Time display	12-hour format/24-hour format	Ⓑ
AUTO mode	Single set point/Dual set point	Ⓒ
Pair No.	0–3	Ⓓ
Backlight	On/Off	Ⓔ

4-1. Switching to the initial setting mode

1. Press the button ① to stop the air conditioner.
2. Press the MENU button ②.
   The Function setting screen will be displayed and the function No. Ⓐ will blink. (Fig. 7-9)
   Press the button ④ to change the function No.
3. Check that function No. “1” is displayed, and then press the SET button ③.
   The display setting screen will be displayed. (Fig. 7-10)

4-2. Changing the temperature unit Ⓐ

Press the TEMP button ⑤.

Each time the TEMP button ⑤ is pressed, the setting switches between ℃ and ℉.

℃ : The temperature is displayed in degrees Celsius.

℉ : The temperature is displayed in degrees Fahrenheit.

4-3. Changing the time display Ⓑ

Press the TIME button ⑥.

Each time the TIME button ⑥ is pressed, the setting switches between AMPM 12:00 and 24:00.

AMPM 12:00 : The time is displayed in the 12-hour format.

24:00 : The time is displayed in the 24-hour format.

4-4. Changing the AUTO mode Ⓒ

Press the button ⑦.

Each time the button ⑦ is pressed, the setting switches between and .

: The AUTO mode operates as the usual automatic mode.

: The AUTO mode operates using dual set points.

4-5. Changing the pair No. Ⓓ

Press the button ④.

Each time the button ④ is pressed, the pair No. 0–3 changes.

Pair No. of wireless remote controller	Indoor PC board
0	Initial setting
1	Cut J41
2	Cut J42
3	Cut J41, J42

4-6. Changing the backlight setting Ⓔ

Press the ON/OFF button ⑧.

Each time the ON/OFF button ⑧ is pressed, the setting switches between on and off.

on : The backlight comes on when a button is pressed.

off : The backlight does not come on when a button is pressed.

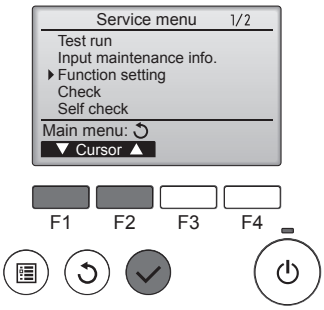

Fig. 7-11

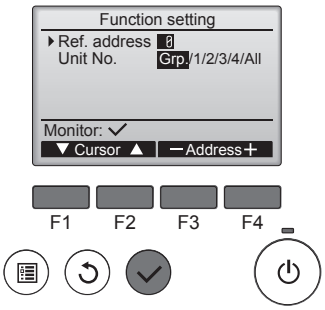

Fig. 7-12

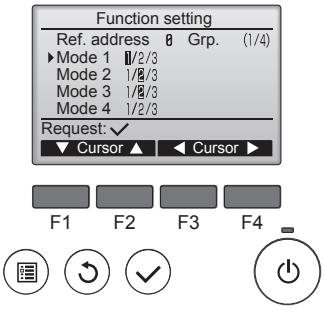

Fig. 7-13

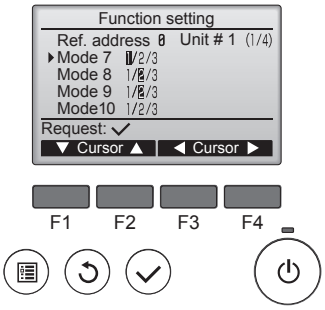

Fig. 7-14

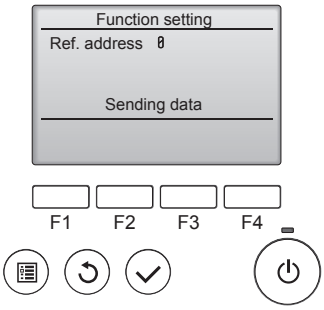

Fig. 7-15

7.4. Function settings

7.4.1. By wired remote controller

① (Fig. 7-11)
- Select “Service” from the Main menu, and press the [SELECT] button.
- Select “Function setting” with the [F1] or [F2] button, and press the [SELECT] button.

② (Fig. 7-12)
- Set the indoor unit refrigerant addresses and unit numbers with the [F1] through [F4] buttons, and then press the [SELECT] button to confirm the current setting.

<Checking the Indoor unit No.>
When the [SELECT] button is pressed, the target indoor unit will start fan operation. If the unit is common or when running all units, all indoor units for the selected refrigerant address will start fan operation.

③ (Fig. 7-13)
- When data collection from the indoor units is completed, the current settings appears highlighted. Non-highlighted items indicate that no function settings are made. Screen appearance varies depending on the “Unit No.” setting.

④ (Fig. 7-14)
- Use the [F1] or [F2] button to move the cursor to select the mode number, and change the setting number with the [F3] or [F4] button.

⑤ (Fig. 7-15)
- When the settings are completed, press the [SELECT] button to send the setting data from the remote controller to the indoor units.
- When the transmission is successfully completed, the screen will return to the Function setting screen.

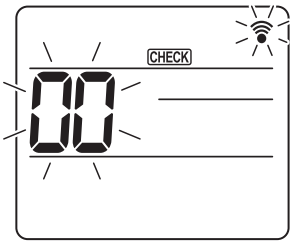

Fig. 7-16

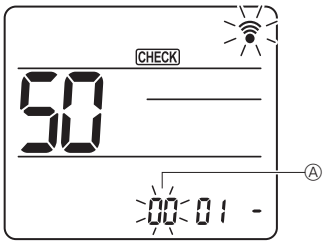

Fig. 7-17

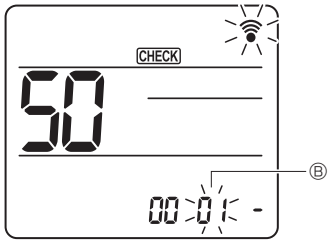

Fig. 7-18

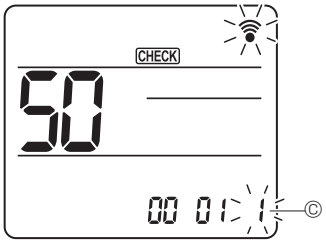

Fig. 7-19

7.4.2. By wireless remote controller (Fig. 7-16, Fig. 7-17, Fig. 7-18, Fig. 7-19)

① Going to the function select mode
Press the MENU button between of 5 seconds.
(Start this operation from the status of remote controller display turned off.)
[CHECK] is lighted and "00" blinks. (Fig. 7-16)
Press the button to set the "50".
Direct the wireless remote controller toward the receiver of the indoor unit and press the SET button.

② Setting the unit number
Press the button to set unit number Ⓐ. (Fig. 7-17)
Direct the wireless remote controller toward the receiver of the indoor unit and press the SET button.

③ Select a mode
Press the button to set Mode number Ⓑ. (Fig. 7-18)
Direct the wireless remote controller toward the receiver of the indoor unit and press the SET button.
Current setting number: 1=1 beep (1 second)
2=2 beep (1 second each)
3=3 beep (1 second each)

④ Selecting the setting number
Use the button to change the Setting number Ⓒ. (Fig. 7-19)
Direct the wireless remote controller toward the receiver of the indoor unit and press the SET button.

⑤ To select multiple functions continuously
Repeat select ③ and ④ to change multiple function settings continuously.

⑥ Complete function selection
Direct the wireless remote controller toward the sensor of the indoor unit and press the ⏻OFF/ON button.

Note:
Make the above settings on Mr. Slim units as necessary.
- **Table 1 summarizes the setting options for each mode number.**
- **Be sure to write down the settings for all functions if any of the initial settings has been changed after the completion of installation work.**

Function table

Select unit number 00 [table 1]

Mode	Settings	Mode no.	Setting no.	Initial setting	setting
Power failure automatic recovery	Not available	01	1		
	Available *1		2	O *2	
Indoor temperature detecting	Indoor unit operating average	02	1	O	
	Set by indoor unit's remote controller		2		
	Remote controller's internal sensor		3		

Select unit numbers 01 to 03 or all units (AL [wired remote controller]/07 [wireless remote controller])

Mode	Settings	Mode no.	Setting no.	Initial setting	setting
Filter sign	100Hr	07	1		
	2500Hr		2	O	
	No filter sign indicator		3		
Fan speed	Silent	08	1		
	Standard		2	O	
	High ceiling		3		
Up/down vane setting	Not setting	11	1		
	Draft less setting (vanes angle setup ①)		2		
	Downward setting (vanes angle setup ②)		3	O	
3D i-See sensor positioning *3	Position ① ("□" stamp position, page 18)	12	1		
	(Position ①)		2		
	Position ③ ("○" stamp position, page 18)		3	O	
Fan speed during the cooling thermostat is OFF	Setting fan speed	27	1	O	
	Stop		2		
	Extra low		3		

*1 When the power supply returns, the air conditioner will start 3 minutes or 1 minute later (hinge on Outdoor unit).
*2 Power failure automatic recovery initial setting depends on the connecting outdoor unit.
*3 When the 3D i-See sensor corner panel position changed, change this mode. Refer to page 18.

7.4.3. How to set the fixed up/down air direction

- Only the particular outlet can be fixed to certain direction with the procedures below. Once fixed, only the set outlet is fixed every time air conditioner is turned on. (Other outlets follow UP/DOWN air direction setting of the remote controller.)

■ **Explanation of word**

- "Refrigerant address No." and "Unit No." are the numbers given to each air conditioner.
- "Outlet No." is the number given to each outlet of air conditioner. (Refer to the right.)
- "Up/Down air direction" is the direction (angle) to fix.

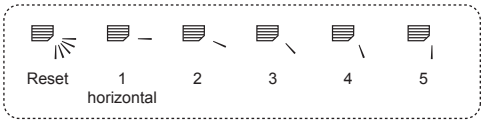

Remote controller setting

The airflow direction of this outlet is controlled by the airflow direction setting of remote controller.

Fixed setting

The airflow direction of this outlet is fixed in particular direction.

* When it is cold because of direct airflow, the airflow direction can be fixed horizontally to avoid direct airflow.

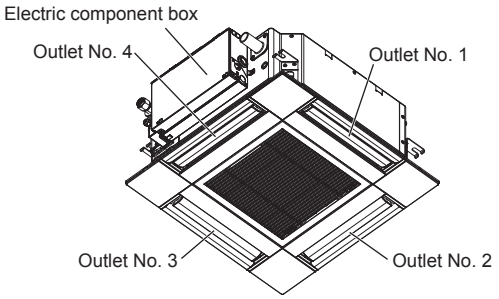

Note:

The outlet No. is indicated by the number of grooves on both ends of each air outlet. Set the air direction while checking the information shown on the remote controller display.

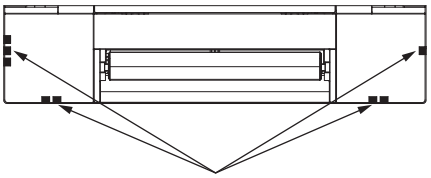

Air outlet identification marks

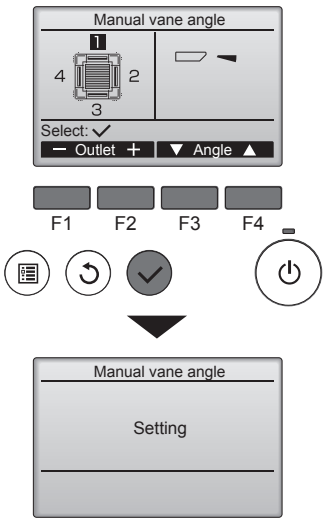

If all outlets are selected, ▭ will be displayed the next time the unit goes into operation.

Navigating through the screens
- To go back to the Main menu.....[MENU] button
- To return to the previous screen .....[RETURN] button

The current vane setting will appear.

Select the desired outlets from 1 through 4 with the [F1] or [F2] button.
- Outlet: "1", "2", "3", "4", and "1, 2, 3, 4, (all outlets)"

Press the [F3] or [F4] button to go through the option in the order of "No setting (reset)", "Step 1", "Step 2", "Step 3", "Step 4", "Step 5", and "Draft reduction*".
Select the desired setting.

■ Vane setting

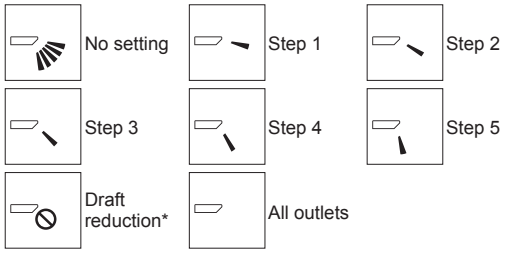

* Draft reduction
The airflow direction for this setting is more horizontal than the airflow direction for the “Step 1” setting in order to reduce a drafty feeling. The draft reduction can be set for only 1 vane.

Press the [SELECT] button to save the settings.
A screen will appear that indicates the setting information is being transmitted.
The setting changes will be made to the selected outlet.
The screen will automatically return to the one shown above (step 4) when the transmission is completed.
Make the settings for other outlets, following the same procedures.

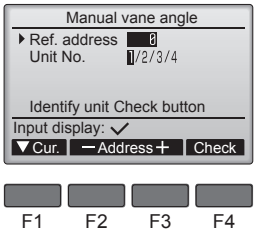

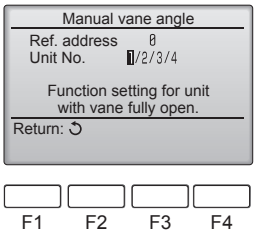

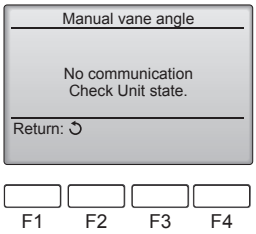

Confirmation procedure

① First, confirm by setting “Ref. address” to 0 and “Unit No.” to 1.
- Move the cursor to "Ref. address" or "Unit No." with the [F1] button to select.
- Select the refrigerant address and the unit number for the units to whose vanes are to be fixed, with the [F2] or [F3] button, and press the [SELECT] button.
- Ref. address: Refrigerant address
- Unit No.: 1, 2, 3, 4

Press the [F4] button to confirm the unit.

② Change the “Unit No.” in order and check each unit.
- Press the [F1] button to select “Unit No.”.
  Press the [F2] or [F3] button to change the “Unit No.” to the unit that you want to check, and then press the [F4] button.
- After pressing the [F4] button, wait approximately 15 seconds, and then check the current state of the air conditioner.
  → The vane is pointing downward. → This air conditioner is displayed on the remote controller.
  → All outlets are closed. → Press the [RETURN] button and continue the operation from the beginning.
  → The messages shown to the left are displayed. → The target device does not exist at this refrigerant address.
- Press the [RETURN] button to return to the initial screen.

③ Change the “Ref. address” to the next number.
- Refer to step ① to change the “Ref. address” and continue with the confirmation.

8. Test run

8.1. Before test run

- ► **After completing installation and the wiring and piping of the indoor and outdoor units, check for refrigerant leakage, looseness in the power supply or control wiring, wrong polarity, and no disconnection of one phase in the supply.**
- ► **Use a 500-volt megohmmeter to check that the resistance between the power supply terminals and ground is at least 1.0 MΩ.**
- ► **Do not carry out this test on the control wiring (low voltage circuit) terminals.**

⚠ **Warning:**
Do not use the air conditioner if the insulation resistance is less than 1.0 MΩ.

8.2. Test run

8.2.1. Using wired remote controller

■ Make sure to read operation manual before test run. (Especially items to secure safety)

Step 1 Turn on the power.

- Remote controller: The system will go into startup mode, and the remote controller power lamp (green) and "PLEASE WAIT" will blink. While the lamp and message are blinking, the remote controller cannot be operated. Wait until "PLEASE WAIT" is not displayed before operating the remote controller. After the power is turned on, "PLEASE WAIT" will be displayed for approximately 2 minutes.
- Indoor controller board: LED 1 will be lit up, LED 2 will be lit up (if the address is 0) or off (if the address is not 0), and LED 3 will blink.
- Outdoor controller board: LED 1 (green) and LED 2 (red) will be lit up. (After the startup mode of the system finishes, LED 2 will be turned off.) If the outdoor controller board uses a digital display, [-] and [-] will be displayed alternately every second.
  If the operations do not function correctly after the procedures in step 2 and thereafter are performed, the following causes should be considered and eliminated if they are found.
  (The symptoms below occur during the test run mode. "Startup" in the table means the LED display written above.)

Symptoms in test run mode		Cause
Remote Controller Display	**OUTDOOR BOARD LED Display** < > indicates digital display.	
Remote controller displays "PLEASE WAIT", and cannot be operated.	After "startup" is displayed, only green lights up. <00>	• After power is turned on, "PLEASE WAIT" is displayed for 2 minutes during system startup. (Normal)
After power is turned on, "PLEASE WAIT" is displayed for 3 minutes, then error code is displayed.	After "startup" is displayed, green(once) and red(once) blink alternately. <F1>	• Incorrect connection of outdoor terminal block (R, S, T and S_1, S_2, S_3.)
	After "startup" is displayed, green(once) and red(twice) blink alternately. <F3, F5, F9>	• Outdoor unit's protection devise connector is open.
No display appears even when remote controller operation switch is turned on. (Operation lamp does not light up.)	After "startup" is displayed, green(twice) and red(once) blink alternately. <EA. Eb>	• Incorrect wiring between the indoor and outdoor unit (Polarity is wrong for S_1, S_2, S_3.) • Remote controller transmission wire short.
	After "startup" is displayed, only green lights up. <00>	• There is no outdoor unit of address 0. (Address is other than 0.) • Remote controller transmission wire open.
Display appears but soon disappears even when remote controller is operated.	After "startup" is displayed, only green lights up. <00>	• After canceling function selection, operation is not possible for about 30 seconds. (Normal)

Step 2 Switch the remote controller to "Test run".

① Select "Test run" from the Service menu, and press the [SELECT] button. (Fig. 8-1)
② Select "Test run" from the Test run menu, and press the [SELECT] button. (Fig. 8-2)
③ The test run operation starts, and the Test run operation screen is displayed.

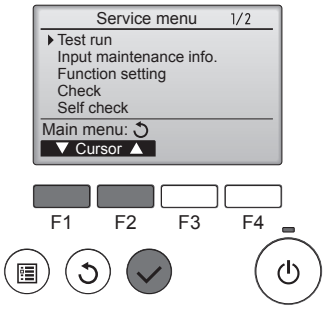

Fig. 8-1

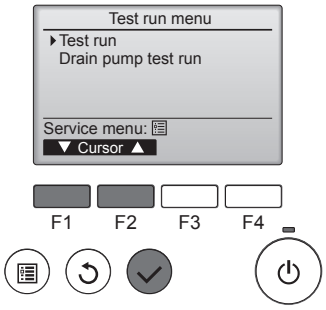

Fig. 8-2

Step 3 Perform the test run and check the airflow temperature and auto vane.

① Press the [F1] button to change the operation mode. (Fig. 8-3)
  Cooling mode: Check that cool air blows from the unit.
  Heating mode: Check that warm air blows from the unit.
② Press the [SELECT] button to display the Vane operation screen, and then press the [F1] and [F2] buttons to check the auto vane. (Fig. 8-4)
  Press the [RETURN] button to return to the Test run operation screen.
  If the vanes do not move, check that the junction wire connectors are connected securely and the connector colors match.

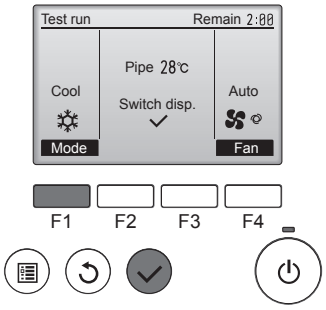

Fig. 8-3

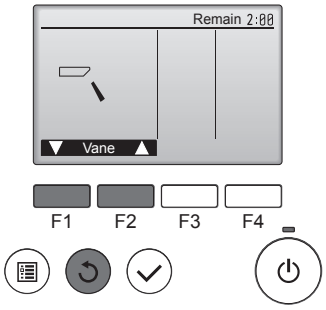

Fig. 8-4

Step 4 Confirm the operation of the outdoor unit fan.

The speed of the outdoor unit fan is controlled in order to control the performance of the unit. Depending on the ambient air, the fan will rotate at a slow speed and will keep rotating at that speed unless the performance is insufficient. Therefore, the outdoor wind may cause the fan to stop rotating or to rotate in the opposite direction, but this is not a problem.

Step 5 Stop the test run.

① Press the [ON/OFF] button to stop the test run. (The Test run menu will appear.)
Note: If an error is displayed on the remote controller, see the table below.

[Output pattern A] Errors detected by indoor unit

Wireless remote controller Beeper sounds/OPERATION INDICATOR lamp blinks (Number of times)	Wired remote controller Check code	Symptom	Remark
1	P1	Intake sensor error	
2	P2	Pipe (TH2) sensor error	
	P9	Pipe (TH5) sensor error	
3	E6, E7	Indoor/outdoor unit communication error	
4	P4	Drain sensor error / Float switch connector open	
5	P5	Drain pump error	
	PA	Forced compressor error	
6	P6	Freezing/Overheating protection operation	
7	EE	Communication error between indoor and outdoor units	
8	P8	Pipe temperature error	
9	E4	Remote controller signal receiving error	
10	—	—	
11	PB (Pb)	Indoor unit fan motor error	
12	FB (Fb)	Indoor unit control system error (memory error, etc.)	
14	PL	Refrigerant circuit abnormal	
No sound	E0, E3	Remote controller transmission error	
No sound	E1, E2	Remote controller control board error	
No sound	– – – –	No corresponding	

[Output pattern B] Errors detected by unit other than indoor unit (outdoor unit, etc.)

Wireless remote controller Beeper sounds/OPERATION INDICATOR lamp blinks (Number of times)	Wired remote controller Check code	Symptom	Remark
1	E9	Indoor/outdoor unit communication error (Transmitting error) (Outdoor unit)	For details, check the LED display of the outdoor controller board.
2	UP	Compressor overcurrent interruption	
3	U3, U4	Open/short of outdoor unit thermistors	
14	PL or Others	Abnormality of refrigerant circuit or other errors	

*1 If the beeper does not sound again after the initial 2 beeps to confirm the self-check start signal was received and the OPERATION INDICATOR lamp does not come on, there are no error records.
*2 If the beeper sounds 3 times continuously "beep, beep, beep (0.4 + 0.4 + 0.4 sec.)" after the initial 2 beeps to confirm the self-check start signal was received, the specified refrigerant address is incorrect.

- On wireless remote controller
  The continuous buzzer sounds from receiving section of indoor unit.
  Blink of operation lamp
- On wired remote controller
  Check code displayed in the LCD.

- Refer to the following tables for details on the check codes. (Wireless remote controller)

[Output pattern A]

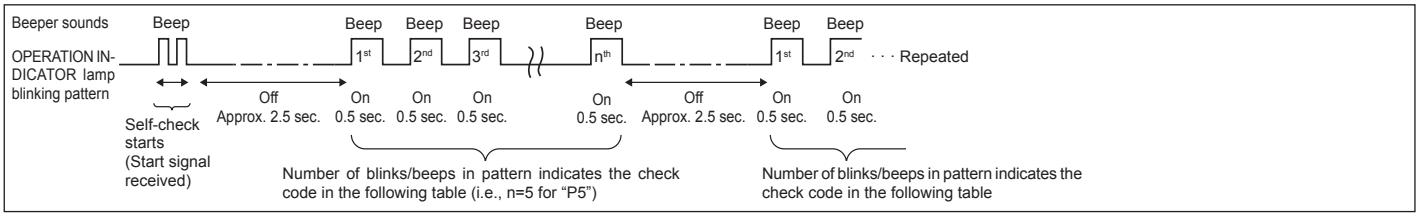

[Output pattern B]

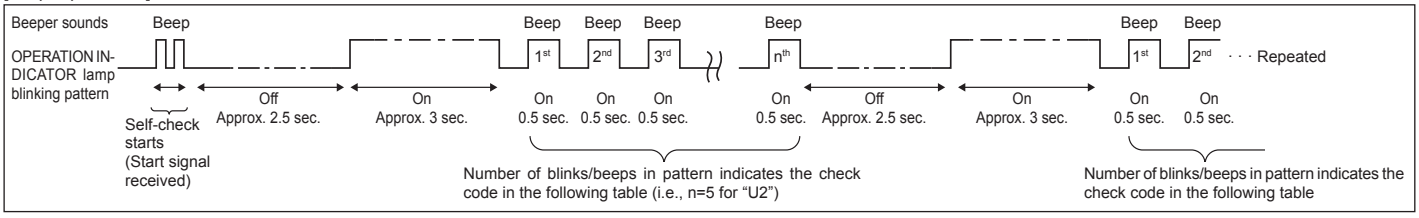

See the table below for the details of the LED display (LED 1, 2, and 3) on the indoor controller board.

LED1 (microcomputer power supply)	Indicates whether control power is supplied. Make sure that this LED is always lit.
LED2 (remote controller power supply)	Indicates whether power is supplied to the wired remote controller. The LED is lit only for the indoor unit that is connected to the outdoor unit that has an address of 0.
LED3 (indoor/outdoor unit communication)	Indicates whether the indoor and outdoor units are communicating. Make sure that this LED is always blinking.

Note:
If the unit is operated continuously during a test run, the unit stops after 2 hours.

8. Test run

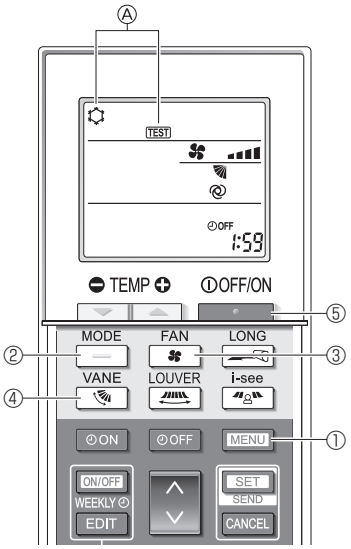

Fig. 8-5

8.2.2. Using the wireless remote controller

1. Turn on the power to the unit at least 12 hours before the test run.
2. Press the MENU button ① for 5 seconds. (Fig. 8-5)
   (Perform this operation when the remote controller display is turned off.)
3. Press the MENU button ①.
   Ⓐ [TEST] and the current operation mode are displayed. (Fig. 8-5)
4. Press the button ② to activate cool mode, then check whether cool air is blown out from the unit.
5. Press the button ② to activate heat mode, then check whether warm air is blown out from the unit.
6. Press the button ③ and check whether the fan speed changes.
7. Press the button ④ and check whether the auto vane operates properly.
8. Press the button ⑤ to stop the test run.
   (After two hours, a signal will be sent to stop the test run.)

Note:
- **Point the remote controller towards the indoor unit receiver while following steps 3 to 8.**
- **It is not possible to perform the test run in FAN, DRY, or AUTO mode.**

8.3. Self-check

■ Refer to the installation manual that comes with each remote controller for details.

8.4. Check of drainage (Fig. 8-6)

- Ensure that the water is being properly drained out and that no water is leaking from joints.

When electric work is completed.
- Pour water during cooling operation and check.

When electric work is not completed.
- Pour water during emergency operation and check.

* Drain pump and fan are activated simultaneously when single phase 230 V is turned on to S1 and S2 on terminal block after the connector (SWE) on controller board in the electrical component box is set to ON.

Be sure to turn it back to the former state after work.

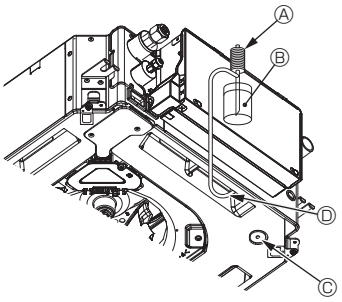

Ⓐ Water supply pump
Ⓑ Water (about 1000 cc)
Ⓒ Drain plug
Ⓓ Pour water through outlet
- Be careful not to spray water into the drain pump mechanism.

Fig. 8-6

9. System control

Refer to the outdoor unit installation manual.

10. Installing the grille

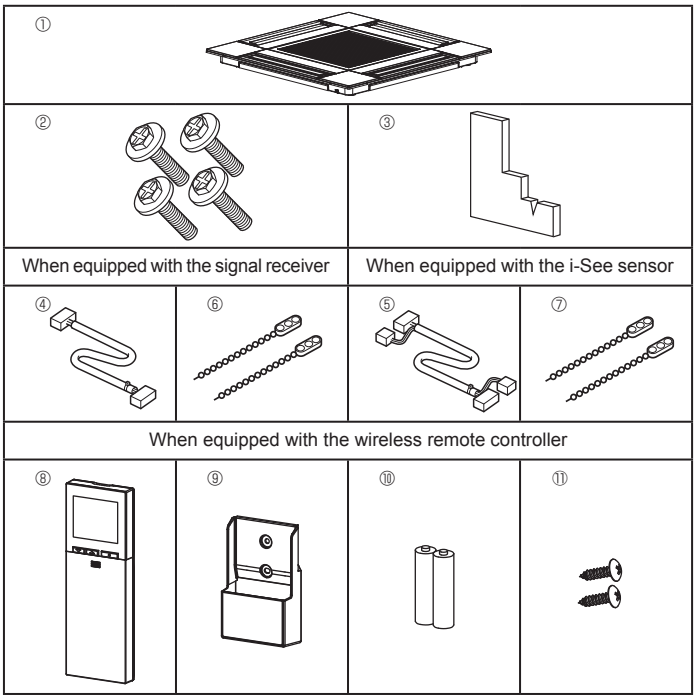

Fig. 10-1

10.1. Check the grille accessories (Fig. 10-1)

- The grille should be supplied with the following accessories.

	Accessory name	Q'ty	Remark
①	Grille	1	625 × 625 (mm), 24-19/32 × 24-19/32 (in)
②	Screw with washer	4	M5 × 0.8 × 25 (mm)
③	Gauge	1	
④	Junction wire for signal receiver	1	Included when equipped with the signal receiver.
⑤	Junction wire for i-See sensor	1	Included when equipped with the i-See sensor.
⑥	Fastener	2	Included when equipped with the signal receiver.
⑦	Fastener	2	Included when equipped with the i-See sensor.
⑧	Wireless remote controller	1	Included when equipped with the wireless remote controller.
⑨	Remote controller holder	1	Included when equipped with the wireless remote controller.
⑩	LR6 AA batteries	2	Included when equipped with the wireless remote controller.
⑪	3.5 × 16 mm tapping screws	2	Included when equipped with the wireless remote controller.

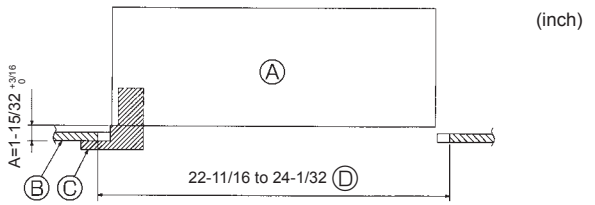

Fig. 10-2

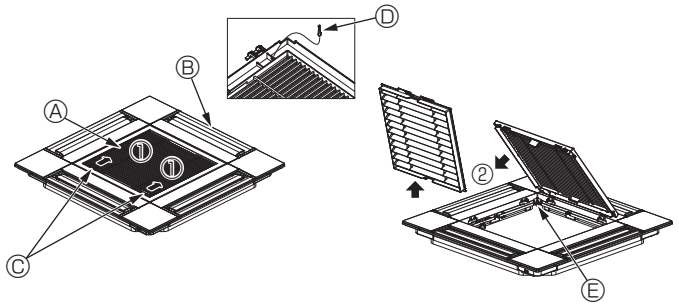

Fig. 10-3

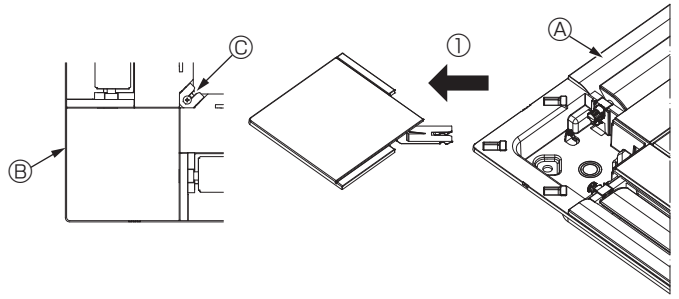

Fig. 10-4

10.2. Preparing to attach the grille (Fig. 10-2)

- With the gauge supplied with this kit, adjust and check the positioning of the unit relative to the ceiling. If the unit is not properly positioned in the ceiling, there may be air leaks, condensation may form, or the up/down vanes may not operate correctly.
- Make sure that the opening in the ceiling is within the following tolerances: 576 × 576 to 610 × 610 (mm), 22-11/16 × 22-11/16 to 24-1/32 × 24-1/32 (inch)
- Make sure that step A is performed within 37 to 42 mm (1-15/32 to 1-21/32 inch). Damage could result by failing to adhere to this range.
  - Ⓐ Main unit
  - Ⓑ Ceiling
  - Ⓒ Gauge (Accessory)
  - Ⓓ Ceiling opening dimensions

10.2.1. Removing the intake grille (Fig. 10-3)

- Slide the levers in the direction indicated by the arrow ① to open the intake grille.
- Unlatch the hook that secures the grille.
  * Do not unlatch the hook for the intake grille.
- With the intake grille in the "open" position, remove the hinge of the intake grille from the grille as indicated by the arrow ②.
  - Ⓐ Intake grille
  - Ⓑ Grille
  - Ⓒ Intake grille levers
  - Ⓓ Grille hook
  - Ⓔ Hole for the grille's hook

10.2.2. Removing the corner panel (Fig. 10-4)

- Loosen the screw from the corner of the corner panel. Slide the corner panel as indicated by the arrow ① to remove the corner panel.
  - Ⓐ Grille
  - Ⓑ Corner panel
  - Ⓒ Screw

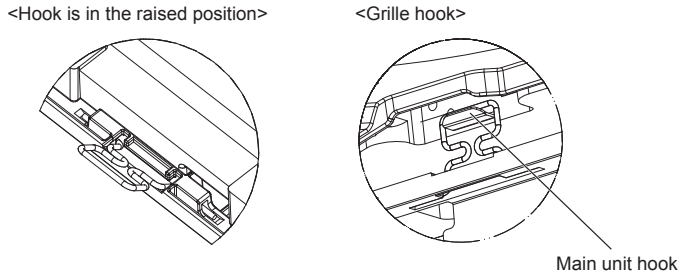

Fig. 10-5

10.3. Installing the grille

- Please pay attention because there is a restriction in the attachment position of the grille.

10.3.1. Temporarily installing the grille

- Align the screw holes in the corners of the grille with the screw mounting holes in the corners of the main unit, latch the two hooks on the grille onto the drain pan projections on the main unit, and temporarily hang the grille. (Fig. 10-5)

⚠ **Caution:**
When installing the i-See sensor and signal receiver, place the junction wires in the connector box before temporarily hanging the grille.
Refer to 7.2.1. on page 9 to route the junction wires.

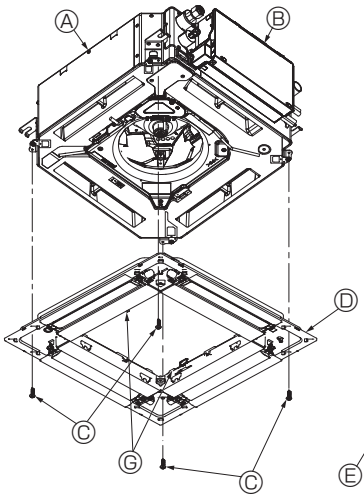

Fig. 10-6

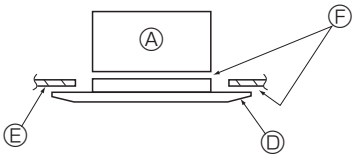

Fig. 10-7

10.3.2. Securing the grille

- Secure the grille by tightening the four screws. (Fig. 10-6)

* Make sure that there are no gaps between the main unit and the panel or the panel and the ceiling. (Fig. 10-7)

- Ⓐ Main unit
- Ⓑ Electric component box
- Ⓒ Screw with washer (Accessory)
- Ⓓ Grille
- Ⓔ Ceiling
- Ⓕ Make sure that there are no gaps.
- Ⓖ Temporarily hanging hooks on the panel

⚠ **Caution:**

- **When tightening the screw with captive washer Ⓒ, tighten it at a torque of 4.8 N·m (4 ft·lbs) or less. Never use an impact screwdriver. It may result in parts damage.**
- **After tightening the screw, confirm that the two grille hooks (Fig. 10-5) are latched onto the hooks on the main unit.**