MITSUBISHI ELECTRIC

SPLIT-TYPE, AIR CONDITIONERS

March 2026

No. TCH142
REVISED EDITION-C

SERVICE MANUAL R454B

Outdoor unit

Models

SUZ-AA18NL-U1
SUZ-AA24NL-U1
SUZ-AA30NL-U1
SUZ-AA36NL-U1
SUZ-AA09NLHZ-U1
SUZ-AA12NLHZ-U1
SUZ-AA15NLHZ-U1
SUZ-AA18NLHZ-U1

Revision:
- Some descriptions have been modified.

TCH142B is void.

Note:
- This manual describes service data of the outdoor units only.

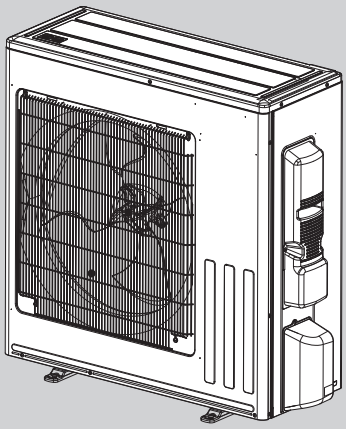

SUZ-AA18/24/30/36NL
SUZ-AA09/12/15/18NLHZ

CONTENTS

1. COMBINATION OF INDOOR AND OUTDOOR UNITS 2
2. SAFETY PRECAUTION 3
3. PART NAMES AND FUNCTIONS 11
4. SPECIFICATION 12
5. OUTLINES AND DIMENSIONS 14
6. WIRING DIAGRAM 15
7. REFRIGERANT SYSTEM DIAGRAM 17
8. DATA 19
9. ACTUATOR CONTROL 28
10. SERVICE FUNCTIONS 29
11. TROUBLESHOOTING 29
12. FUNCTION SETTING 49
13. DISASSEMBLY INSTRUCTIONS 53

PARTS CATALOG (TCB142C)

1 COMBINATION OF INDOOR AND OUTDOOR UNITS

Indoor unit		Outdoor unit							
		SUZ-							
Service Ref.	Service Manual No.	AA18NL-U1	AA24NL-U1	AA30NL-U1	AA36NL-U1	AA09NLHZ-U1	AA12NLHZ-U1	AA15NLHZ-U1	AA18NLHZ-U1
SLZ-AF09/12/15/18NL-U1	OCH857	○	—	—	—	○	○	○	○
SEZ-AE09/12/15/18NL-U1	HWE24090	○	—	—	—	○	○	○	○
PEAD-AA09/12/15/18/24/30/36NL-U1	HWE24030	○	○	○	○	○	○	○	○
SVZ-AP12/18/24/30/36NL-U1	—	○	○	○	○	—	○	—	○
MLZ-KX09/12/18NL-U1	OBH943	○	—	—	—	○	○	—	○
MSZ-EX09/12/15/18NL(B/S/W)-U1	TBH238	○	—	—	—	○	○	○	○
MFZ-KX09/12/15/18NL-U1	OBH944	○	—	—	—	○	○	○	○

2 SAFETY PRECAUTION

MEANING OF SYMBOLS DISPLAYED ON THE UNIT

Refrigerant safety Group A2L	**WARNING** (Risk of fire)	This unit uses a flammable refrigerant. If the refrigerant leaks and comes in contact with fire or heating part, it will create harmful gas and there is risk of fire.
	Read the OPERATING MANUAL carefully before operation.	
	Service personnel are required to carefully read the OPERATION MANUAL and INSTALLATION MANUAL before operation.	
	Further information is available in the OPERATING MANUAL, INSTALLATION MANUAL, and the like.	

2-1. ALWAYS OBSERVE FOR SAFETY

Before obtaining access to terminal, all supply circuits must be disconnected.

2-2. CAUTIONS RELATED TO NEW REFRIGERANT

Cautions for units utilizing refrigerant R454B

Do not use the existing refrigerant piping.

The old refrigerant and lubricant in the existing piping contains a large amount of chlorine which may cause the lubricant deterioration of the new unit.

Make sure that the inside and outside of refrigerant piping is clean and it has no contaminants such as sulfur, oxides, dirt, shaving particles, etc., which are hazard to refrigerant cycle.
In addition, use pipes with specified thickness.

Contamination inside refrigerant piping can cause deterioration of refrigerant oil, etc.

Store the piping indoors, and keep both ends of the piping sealed until just before brazing.
(Leave elbow joints, etc. in their packaging.)

If dirt, dust or moisture enters into refrigerant cycle, that can cause deterioration of refrigerant oil or malfunction of compressor.

The refrigerant oil applied to flare and flange connections must be ester oil, ether oil or alkylbenzene oil in a small amount.

If large amount of mineral oil enters, that can cause deterioration of refrigerant oil, etc.

Charge refrigerant from liquid phase of gas cylinder.

If the refrigerant is charged from gas phase, composition change may occur in refrigerant and the efficiency will be lowered.

Ventilate the room if refrigerant leaks during operation. If refrigerant comes into contact with a flame, poisonous gases will be released.

Use a vacuum pump with a reverse flow check valve.

Vacuum pump oil may flow back into refrigerant cycle and that can cause deterioration of refrigerant oil, etc.

Use the following tools specifically designed for use with R454B refrigerant.

The following tools are necessary to use R454B refrigerant.

Tools for R454B	
Gauge manifold	Flare tool
Charge hose	Size adjustment gauge
Gas leak detector	Vacuum pump adaptor
Torque wrench	Electronic refrigerant charging scale

Handle tools with care.

If dirt, dust or moisture enters into refrigerant cycle, that can cause deterioration of refrigerant oil or malfunction of compressor.

Do not use a charging cylinder.

If a charging cylinder is used, the composition of refrigerant will change and the efficiency will be lowered.

Use the specified refrigerant only.

Never use any refrigerant other than that specified.
Doing so may cause a burst, an explosion, or fire when the unit is being used, serviced, or disposed of.
Correct refrigerant is specified on name plate of outdoor unit.
If other refrigerant (R22, etc.) is used, chlorine in refrigerant can cause deterioration of refrigerant oil, etc.
We will not be held responsible for mechanical failure, system malfunction, unit breakdown or accidents caused by failure to follow the instructions.

[1] Warning for service

(1) Do not alter the unit.
(2) For installation and relocation work, follow the instructions in the Installation Manual and use tools and pipe components specifically made for use with refrigerant specified in the outdoor unit installation manual.
(3) Ask a dealer or an authorized technician to install, relocate and repair the unit.
(4) This unit should be installed in rooms which exceed the floor space specified in outdoor unit installation manual. Refer to outdoor unit installation manual.
(5) Install the indoor unit at least 2.5 m above floor or grade level.
For appliances not accessible to the general public.
(6) Refrigerant pipes connection shall be accessible for maintenance purposes.
(7) If the air conditioner is installed in a small room or closed room, measures must be taken to prevent the refrigerant concentration in the room from exceeding the safety limit in the event of refrigerant leakage. Should the refrigerant leak and cause the concentration limit to be exceeded, hazards due to lack of oxygen in the room may result.
(8) Keep gas-burning appliances, electric heaters, and other fire sources (ignition sources) away from the location where installation, repair, and other air conditioner work will be performed.
If refrigerant comes into contact with a flame, poisonous gases will be released.
(9) When installing or relocating, or servicing the air conditioner, use only the specified refrigerant written on outdoor unit to charge the refrigerant lines.
Do not mix it with any other refrigerant and do not allow air to remain in the lines.
If air is mixed with the refrigerant, then it can be the cause of abnormal high pressure in the refrigerant line, and may result in an explosion and other hazards.
(10) After installation has been completed, check for refrigerant leaks. If refrigerant leaks into the room and comes into contact with the flame of a heater or portable cooking range, poisonous gases will be released.
(11) Do not use low temperature solder alloy in case of brazing the refrigerant pipes.
(12) When performing brazing work, be sure to ventilate the room sufficiently. Make sure that there are no hazardous or flammable materials nearby.
When performing the work in a closed room, small room, or similar location, make sure that there are no refrigerant leaks before performing the work.
If refrigerant leaks and accumulates, it may ignite or poisonous gases may be released.
(13) Do not install the unit in places where refrigerant may build-up or places with poor ventilation such as a semi-basement or a sunken place in outdoor: Refrigerant is heavier than air, and inclined to fall away from the leak source.
(14) Do not use means to accelerate the defrosting process or to clean, other than those recommended by the manufacturer.
(15) The appliance shall be stored in a room without continuously operating ignition sources (for example: open flames, an operating gas appliance or an operating electric heater).
(16) Do not pierce or burn.
(17) Be aware that refrigerants may not contain an odour.
(18) Pipe-work shall be protected from physical damage.
(19) The installation of pipe-work shall be kept to a minimum.
(20) Compliance with national gas regulations shall be observed.
(21) Keep any required ventilation openings clear of obstruction.
(22) Servicing shall be performed only as recommended by the manufacturer.
(23) The appliance shall be stored in a well-ventilated area where the room size corresponds to the room area as specified for operation.
(24) Maintenance, service and repair operations shall be performed by authorized technician with required qualification.

[2] Cautions for service

(1) Perform service after recovering the refrigerant left in unit completely.
(2) Do not release refrigerant in the air.
(3) After completing service, charge the cycle with specified amount of refrigerant.
(4) When performing service, install a filter drier simultaneously.
Be sure to use a filter drier for new refrigerant.

[3] Additional refrigerant charge

When charging directly from cylinder
(1) Check that cylinder for R32 available on the market is a syphon type.
(2) Charging should be performed with the cylinder of syphon stood vertically. (Refrigerant is charged from liquid phase.)

[4] Cautions for unit using R454B refrigerant

Basic work procedures are the same as those for conventional units using refrigerant R410A. However, pay careful attention to the following points.

(1) Information on servicing

(1-1) Checks to the area

Prior to beginning work on systems containing FLAMMABLE REFRIGERANTS, safety checks are necessary to ensure that the risk of ignition is minimized.

For repair to the REFRIGERATING SYSTEM, 1-2 to 1-6 shall be completed prior to conducting work on the system.

(1-2) Work Procedure

Work shall be undertaken under a controlled procedure so as to minimize the risk of a flammable gas or vapour being present while the work is being performed.

(1-3) General work area

All maintenance staff and others working in the local area shall be instructed on the nature of work being carried out.

Work in confined spaces shall be avoided.

(1-4) Checking for presence of refrigerant

The area shall be checked with an appropriate refrigerant detector prior to and during work, to ensure the technician is aware of potentially toxic or flammable atmospheres.

Ensure that the leak detection equipment being used is suitable for use with all applicablerefrigerants, i.e. nonsparking, adequately sealed or intrinsically safe.

(1-5) Presence of fire extinguisher

If any hot work is to be conducted on the refrigerating equipment or any associated parts, appropriate fire extinguishing equipment shall be available to hand.

Have a dry powder or CO2 fire extinguisher adjacent to the charging area.

(1-6) No ignition sources

No person carrying out work in relation to a REFRIGERATING SYSTEM which involves exposing any pipe work shall use any sources of ignition in such a manner that it may lead to the risk of fire or explosion.

All possible ignition sources, including cigarette smoking, should be kept sufficiently far away from the site of installation, repairing, removing and disposal, during which refrigerant can possibly be released to the surrounding space.

Prior to work taking place, the area around the equipment is to be surveyed to make sure that there are no flammable hazards or ignition risks. "No Smoking" signs shall be displayed.

(1-7) Ventilated area

Ensure that the area is in the open or that it is adequately ventilated before breaking into the system or conducting any hot work. A degree of ventilation shall continue during the period that the work is carried out.

The ventilation should safely disperse any released refrigerant and preferably expel it externally into the atmosphere.

(1-8) Checks to the refrigerating equipment

Where electrical components are being changed, they shall be fit for the purpose and to the correct specification.

At all times the manufacturer's maintenance and service guidelines shall be followed. If in doubt, consult the manufacturer's technical department for assistance.

The following checks shall be applied to installations using FLAMMABLE REFRIGERANTS:

- the actual REFRIGERANT CHARGE is in accordance with the room size within which the refrigerant containing parts are installed.
- the ventilation machinery and outlets are operating adequately and are not obstructed.
- marking to the equipment continues to be visible and legible. Markings and signs that are illegible shall be corrected.
- refrigerating pipe or components are installed in a position where they are unlikely to be exposed to any substance which may corrode refrigerant containing components, unless the components are constructed of materials which are inherently resistant to being corroded or are suitably protected against being so corroded.

(1-9) Checks to electrical devices

Repair and maintenance to electrical components shall include initial safety checks and component inspection procedures. If a fault exists that could compromise safety, then no electrical supply shall be connected to the circuit until it is satisfactorily dealt with.

If the fault cannot be corrected immediately but it is necessary to continue operation, an adequate temporary solution shall be used. This shall be reported to the owner of the equipment so all parties are advised.

Initial safety checks shall include:

- that capacitors are discharged: this shall be done in a safe manner to avoid possibility of sparking.
- that no live electrical components and wiring are exposed while charging, recovering or purging the system.
- that there is continuity of earth bonding.

(2) Repairs to sealed components

Sealed electrical components shall be replace.

(3) Repair to intrinsically safe components

Intrinsically safe components must be replaced.

(4) Cabling

Check that cabling will not be subject to wear, corrosion, excessive pressure, vibration, sharp edges or any other adverse environmental effects.

The check shall also take into account the effects of aging or continual vibration from sources such as compressors or fans.

(5) Detection of flammable refrigerants

Under no circumstances shall potential sources of ignition be used in the searching for or detection of refrigerant leaks. A halide torch (or any other detector using a naked flame) shall not be used.

The following leak detection methods are deemed acceptable for all refrigerant systems.

Electronic leak detectors may be used to detect refrigerant leaks but, in the case of FLAMMABLE REFRIGERANTS, the sensitivity may not be adequate, or may need re-calibration. (Detection equipment shall be calibrated in a refrigerant-free area.)

Ensure that the detector is not a potential source of ignition and is suitable for the refrigerant used.

Leak detection equipment shall be set at a percentage of the LFL of the refrigerant and shall be calibrated to the refrigerant employed, and the appropriate percentage of gas (25 % maximum) is confirmed.

Leak detection fluids are also suitable for use with most refrigerants but the use of detergents containing chlorine shall be avoided as the chlorine may react with the refrigerant and corrode the copper pipe-work.

If a leak is suspected, all naked flames shall be removed / extinguished.

If a leakage of refrigerant is found which requires brazing, all of the refrigerant shall be recovered from the system, or isolated (by means of shut off valves) in a part of the system remote from the leak. Removal of refrigerant shall be according to 2-4.6.

(6) Removal and evacuation

When breaking into the refrigerant circuit to make repairs - or for any other purpose -conventional procedures shall be used. However, for flammable refrigerants it is important that best practice be followed, since flammability is a consideration.

The following procedure shall be adhered to:

- safely remove refrigerant following local and national regulations;
  - evacuate
  - purge the circuit with inert gas
  - evacuate
  - continuously flush or purge with inert gas when using flame to open circuit
  - open the circuit

The refrigerant charge shall be recovered into the correct recovery cylinders if venting is not allowed by local and national codes.

For appliances containing flammable refrigerants, the system shall be purged with oxygen-free nitrogen to render the appliance safe for flammable refrigerants. This process might need to be repeated several times.

Compressed air or oxygen shall not be used for purging refrigerant systems.

For appliances containing flammable refrigerants, refrigerants purging shall be achieved by breaking the vacuum in the system with oxygen-free nitrogen and continuing to fill until the working pressure is achieved, then venting to atmosphere, and finally pulling down to a vacuum.

This process shall be repeated until no refrigerant is within the system. When the final oxygen-free nitrogen charge is used, the system shall be vented down to atmospheric pressure to enable work to take place.

The outlet for the vacuum pump shall not be close to any potential ignition sources, and ventilation shall be available.

(7) Charging procedures

In addition to conventional charging procedures, the following requirements shall be followed.

- Ensure that contamination of different refrigerants does not occur when using charging equipment. Hoses or lines shall be as short as possible to minimize the amount of REFRIGERANT contained in them.
- Cylinders shall be kept in an appropriate position according to the instructions.
- Ensure that the REFRIGERATING SYSTEM is earthed prior to charging the system with refrigerant.
- Label the system when charging is complete (if not already).
- Extreme care shall be taken not to overfill the REFRIGERATING SYSTEM.

Prior to recharging the system, it shall be pressure-tested with the appropriate purging gas. The system shall be leak-tested on completion of charging but prior to commissioning. A follow up leak test shall be carried out prior to leaving the site.

(8) Decommissioning

Before carrying out this procedure, it is essential that the technician is completely familiar with the equipment and all its detail. It is recommended good practice that all refrigerants are recovered safely.

Prior to the task being carried out, an oil and refrigerant sample shall be taken in case analysis is required prior to re-use of recovered refrigerant. It is essential that electrical power is available before the task is commenced.

Continued to the next page

a) Become familiar with the equipment and its operation.
b) Isolate system electrically.
c) Before attempting the procedure, ensure that:
- mechanical handling equipment is available, if required, for handling refrigerant cylinders.
- all personal protective equipment is available and being used correctly.
- the recovery process is supervised at all times by a competent person.
- recovery equipment and cylinders conform to the appropriate standards.

d) Pump down refrigerant system, if possible.
e) If a vacuum is not possible, make a manifold so that refrigerant can be removed from various parts of the system.
f) Make sure that cylinder is situated on the scales before recovery takes place.
g) Start the recovery machine and operate in accordance with instructions.
h) Do not overfill cylinders. (no more than 80 % volume liquid charge)
i) Do not exceed the maximum working pressure of the cylinder, even temporarily.
j) When the cylinders have been filled correctly and the process completed, make sure that the cylinders and the equipment are removed from site promptly and all isolation valves on the equipment are closed off.
k) Recovered refrigerant shall not be charged into another REFRIGERATING SYSTEM unless it has been cleaned and checked.

(9) Labelling

Equipment shall be labelled stating that it has been de-commissioned and emptied of refrigerant.
The label shall be dated and signed. For appliances containing FLAMMABLE REFRIGERANTS, ensure that there are labels on the equipment stating the equipment contains FLAMMABLE REFRIGERANT.

(10) Recovery

When removing refrigerant from a system, either for servicing or decommissioning, it is recommended good practice that all refrigerants are removed safely.
When transferring refrigerant into cylinders, ensure that only appropriate refrigerant recovery cylinders are employed. Ensure that the correct number of cylinders for holding the total system charge is available.
All cylinders to be used are designated for the recovered refrigerant and labelled for that refrigerant (i.e. special cylinders for the recovery of refrigerant). Cylinders shall be complete with pressure-relief valve and associated shutoff valves in good working order.
Empty recovery cylinders are evacuated and, if possible, cooled before recovery occurs.
The recovery equipment shall be in good working order with a set of instructions concerning the equipment that is at hand and shall be suitable for the recovery of the flammable refrigerant.
If in doubt, the manufacturer should be consulted. In addition, a set of calibrated weighing scales shall be available and in good working order. Hoses shall be complete with leak-free disconnect couplings and in good condition.
The recovered refrigerant shall be processed according to local legislation in the correct recovery cylinder, and the relevant waste transfer note arranged. Do not mix refrigerants in recovery units and especially not in cylinders.
If compressors or compressor oils are to be removed, ensure that they have been evacuated to an acceptable level to make certain that flammable refrigerant does not remain within the lubricant.
The compressor body shall not be heated by an open flame or other ignition sources to accelerate this process.
When oil is drained from a system, it shall be carried out safely.

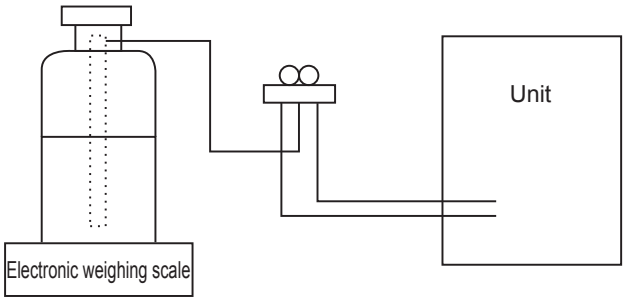

[5] Service tools

Use the below service tools as exclusive tools for R454B refrigerant.

No.	Tool name	Specifications
①	Gauge manifold	· Only for R454B
		· Use the existing fitting specifications. (UNF1/2)
		· Use high-tension side pressure of 768.7 PSIG [5.3 MPa.G] or over.
②	Charge hose	· Only for R454B
		· Use pressure performance of 738.2 PSIG [5.09 MPa.G] or over.
③	Electronic weighing scale	—
④	Gas leak detector	· Use the detector for R454B.
⑤	Adaptor for reverse flow check	· Attach on vacuum pump.
⑥	Refrigerant charge base	—
⑦	Refrigerant cylinder	· Only for R454B · Cylinder with syphon
⑧	Refrigerant recovery equipment	—

2-3. CAUTIONS FOR REFRIGERANT PIPING WORK

New refrigerant R454B is adopted for replacement inverter series. Although the refrigerant piping work for R454B is same as for R22/R410A, exclusive tools are necessary so as not to mix with different kind of refrigerant. Furthermore as the working pressure of R454B is 1.6 times higher than that of R22, their sizes of flared sections and flare nuts are different.

① Thickness of pipes
Since the working pressure of R454B is higher compared to R22, be sure to use refrigerant piping with thickness shown below. (Never use pipes of 7/256 inch [0.7 mm] or below.)

Diagram below: Piping diameter and Thickness

Norminal dimensions (inch)	Outside diameter (mm)	Thickness : inch [mm]	
		R454B/R410A	R22
1/4	6.35	1/32 [0.8]	1/32 [0.8]
3/8	9.52	1/32 [0.8]	1/32 [0.8]
1/2	12.70	1/32 [0.8]	1/32 [0.8]

② Dimensions of flare cutting and flare nut
The component molecules in HFC refrigerant are smaller compared to conventional refrigerants. In addition to that, R454B is a refrigerant, which has higher risk of leakage because its working pressure is higher than that of other refrigerants. Therefore, to enhance air tightness and strength, flare cutting dimension of copper pipe for R454B has been specified separately from the dimensions for other refrigerants as shown below. The dimension B of flare nut for R454B also has partly been changed to increase strength as shown below. Set copper pipe correctly referring to copper pipe flaring dimensions for R454B below. For 1/2 and 5/8 inch pipes, the dimension B changes.
Use torque wrench corresponding to each dimension.

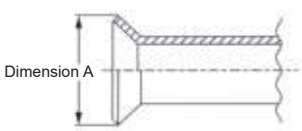

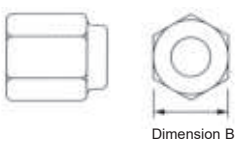

Flare cutting demensions

Norminal dimensions (inch)	Outside diameter (mm)	Dimension A ($^{+0}_{-0.4}$)	
		R454B/R410A (inch [mm])	R22 (mm)
1/4	6.35	11/32-23/64 [9.1]	9.0
3/8	9.52	1/2-33/64 [13.2]	13.0
1/2	12.70	41/64-21/32 [16.6]	16.2

Flare cutting demensions

Norminal dimensions (inch)	Outside diameter (mm)	Dimension B	
		R454B/R410A (inch [mm])	R22 (mm)
1/4	6.35	43/64 [17.0]	17.0
3/8	9.52	7/8 [22.0]	22.0
1/2	12.70	1-3/64 [26.0]	24.0

③ Tools for R454B (The following table shows whether conventional tools can be used or not.)

Tools and materials	Use	R454B tools	Can R22 tools be used ?	Can R410A tools be used ?
Gauge manifold	Air purge, refrigerant charge and operation check	Tool exclusive for R454B	○	○
Charge hose		Tool exclusive for R454B	×	○
Gas leak detector	Gas leak check	Tool for HFC refrigerant	×	○
Refrigerant recovery equipment	Refrigerant recovery	Tool exclusive for R454B	×	○
Refrigerant cylinder	Refrigerant charge	Tool exclusive for R454B	×	○
Applied oil	Apply to flared section	Ester oil, ether oil and alkylbenzene oil (minimum amount)	×	Ester oil, ether oil: ○ Alkylbenzene oil: minimum amount
Safety charger	Prevent compressor malfunction when charging refrigerant by spraying liquid refrigerant	Tool exclusive for R454B	×	○
Charge valve	Prevent gas from blowing out when detaching charge hose	Tool exclusive for R454B	×	○
Vacuum pump	Vacuum drying and air purge	Tools for other refrigerants can be used if equipped with adapter for reverse flow check	△ (Usable if equipped with adapter for reverse flow)	△ (Usable if equipped with adapter for reverse flow)
Flare tool*	Flaring work of piping	Tools for other refrigerants can be used by adjusting flaring dimension	△ (Usable by adjusting flaring dimension)	△ (Usable by adjusting flaring dimension)
Bender	Bend the pipes	Tools for other refrigerants can be used	○	○
Pipe cutter*	Cut the pipes	Tools for other refrigerants can be used	○	○
Welder and nitrogen gas cylinder	Weld the pipes	Tools for other refrigerants can be used	○	○
Refrigerant charging scale	Refrigerant charge	Tools for other refrigerants can be used	○	○
Vacuum gauge or thermistor vacuum gauge and vacuum valve	Check the degree of vacuum. (Vacuum valve prevents back flow of oil and refrigerant to thermistor vacuum gauge)	Tools for other refrigerants can be used	○	○
Charging cylinder	Refrigerant charge	Tool exclusive for R454B	×	×

×: Prepare a new tool. (Use the new tool as the tool exclusive for R454B.)
△: Tools for other refrigerants can be used under certain conditions.
○: Tools for other refrigerants can be used.
* Follow the instructions below to prevent abrasive components contained in sandpaper and cutting tools from entering the refrigerant circuit because those components can cause failures of the compressor and valves.

• To deburr pipes, use a reamer or other deburring tools, not sandpaper.
• To cut pipes, use a pipe cutter, not a grinder or other tools that use abrasive materials.
• When cutting or deburring pipes, do not allow cutting chips or other foreign matters to enter the pipes.
• If cutting chips or other foreign matters enter pipes, wipe them off the inside of the pipes.

⚠ WARNING

■ Except for MFZ (Floor-standing) series

- The mounting height of indoor unit shall be 5.9 ft (1.8 m) or more from the floor. Up to 7.5 ft (2.3 m) is recommended.
- The unit shall be installed in rooms that meet or exceed the minimum room area (A_{min}) determined by total refrigerant amount (M).

M			A_{min}	
[kg]	[lbs, oz]		[m²]	[ft²]
0.5	1	1	1.9	21
0.6	1	5	2.3	25
0.7	1	8	2.6	28
0.8	1	12	3.0	33
0.9	1	15	3.4	37
1.0	2	3	3.8	41
1.1	2	6	4.1	45
1.2	2	10	4.5	49
1.3	2	13	4.9	53
1.4	3	1	5.2	56
1.5	3	4	5.6	61
1.6	3	8	6.0	65
1.7	3	11	6.3	68
1.8	3	15	6.8	74
1.9	4	3	7.2	78
2.0	4	6	7.6	82
2.1	4	10	7.9	86
2.2	4	13	8.3	90
2.3	5	1	8.7	94
2.4	5	4	9.1	98
2.5	5	8	9.4	102
2.6	5	11	9.8	106
2.7	5	15	10.2	110
2.8	6	2	10.6	115

* Refer to the installation manual of the indoor unit for details on how to install the indoor unit.

- For ducted systems to one or more rooms, first determine the system's refrigerant amount, then refer to the indoor unit installation manual for each room's restriction for minimum area.

■ For MFZ (Floor-standing) series

- Do not install the indoor unit at a place higher than 5.9 in. (150 mm).
- The unit shall be installed in rooms that meet or exceed the minimum room area (A_{min}) determined by total refrigerant amount (M).

M			A_{min}	
[kg]	[lbs, oz]		[m²]	[ft²]
0.5	1	1	1.9	21
0.6	1	5	2.3	25
0.7	1	8	2.6	28
0.8	1	12	3.0	33
0.9	1	15	3.4	37
1.0	2	3	3.8	41
1.1	2	6	4.1	45
1.2	2	10	4.5	49
1.3	2	13	4.9	53
1.4	3	1	5.2	56
1.5	3	4	5.6	61
1.6	3	8	6.0	65
1.7	3	11	6.3	68
1.8	3	15	6.7	73
1.9	4	3	7.1	77
2.0	4	6	7.5	81
2.1	4	10	7.8	84
2.2	4	13	8.2	89
2.3	5	1	8.6	93
2.4	5	4	8.9	96
2.5	5	8	9.3	101
2.6	5	11	9.7	105
2.7	5	15	10.0	108
2.8	6	2	10.4	112

3 PART NAMES AND FUNCTIONS

SUZ-AA18NL-U1 **SUZ-AA24NL-U1** **SUZ-AA30NL-U1** **SUZ-AA36NL-U1**
SUZ-AA09NLHZ-U1 **SUZ-AA12NLHZ-U1** **SUZ-AA15NLHZ-U1** **SUZ-AA18NLHZ-U1**

OUTDOOR UNIT

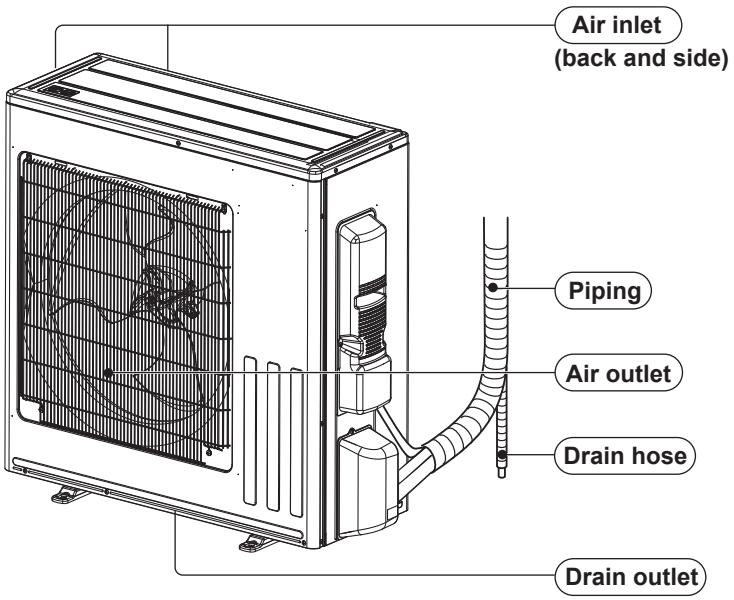

4 SPECIFICATION

Outdoor unit model			SUZ-AA18NL	SUZ-AA24NL	SUZ-AA30NL	SUZ-AA36NL
Power supply	V , phase , Hz		208/230 , 1 , 60			
Max. fuse size (time delay)		A	42	40	41	
Min. circuit ampacity		A	25	24	25	
Fan motor		A	0.5			
Compressor	Model		SRB172FQHMT	SRB220FQYMT		
	Refrigeration oil	fl oz. (L) (Model)	14.5 (0.43)/ (RM68EH)	15.6 (0.46)/ (RM68EH)		
Refrigerant control			Linear expansion valve			
Sound level*1	Cooling	dB(A)	54	55		
	Heating	dB(A)	55			
Air flow High - Med. - Low	Cooling	CFM	2193-2193-1097	1974-1974-1097		
	Heating	CFM	1949 - 1949 - 1364			
Fan speed High - Med. - Low	Cooling	rpm	900-900-450	810-810-450		
	Heating	rpm	800-800-560			
Defrost method			Reverse cycle			
Dimensions	W	in.	33-1/16			
	D	in.	13			
	H	in.	34-5/8			
Weight		lb.	115	117		
External finish			Munsell 3Y 7.8/1.1			
Control voltage (by built-in transformer)		V DC	12 - 24			
Refrigerant piping			Not supplied			
Refrigerant pipe size (Min. wall thickness)	Liquid	in.	1/4 (0.0315)			
	Gas	in.	1/2 (0.0285)	5/8 (0.0315)		
Connection method	Indoor		Flared			
	Outdoor		Flared			
Between the indoor & outdoor units	Height difference	ft.	50	100		
	Piping length	ft.	100			
Refrigerant charge (R454B)			2 lb. 16 oz.	3 lb. 4 oz.		

Note: Test conditions are based on AHRI 210/240.
Rating conditions (Cooling) — Indoor: 80˚F D.B., 67˚F W.B., Outdoor: 95˚F D.B., (75˚F W.B.)
(Heating) — Indoor: 70˚F D.B., 60˚F W.B., Outdoor: 47˚F D.B., 43˚F W.B.

OPERATING RANGE

(1) POWER SUPPLY

	Rated voltage	Guaranteed voltage (V)
Outdoor unit	208/230 V 1 phase 60 Hz	Min. 198 — 208 — 230 — Max. 253

Outdoor unit model			SUZ-AA09NLHZ	SUZ-AA12NLHZ	SUZ-AA15NLHZ	SUZ-AA18NLHZ
Power supply	V , phase , Hz		208/230 , 1 , 60			
Max. fuse size (time delay)		A	41	42		
Min. circuit ampacity		A	24	25		
Fan motor		A	0.5			
Compressor	Model		SRB172FQHMT			
	Refrigeration oil	fl oz. (L) (Model)	14.5 (0.43)/ (RM68EH)			
Refrigerant control			Linear expansion valve			
Sound level*1	Cooling	dB(A)	54		55	
	Heating	dB(A)	55			
Air flow High - Med. - Low	Cooling	CFM	2193-2193-1097			
	Heating	CFM	1949 - 1949 - 1364			
Fan speed High - Med. - Low	Cooling	rpm	900-900-450			
	Heating	rpm	800-800-560			
Defrost method			Reverse cycle			
Dimensions	W	in.	33-1/16			
	D	in.	13			
	H	in.	34-5/8			
Weight		lb.	115			
External finish			Munsell 3Y 7.8/1.1			
Control voltage (by built-in transformer)		V DC	12-24			
Refrigerant piping			Not supplied			
Refrigerant pipe size (Min. wall thickness)	Liquid	in.	1/4 (0.0315)			
	Gas	in.	3/8 (0.0315)		1/2 (0.0285)	
Connection method	Indoor		Flared			
	Outdoor		Flared			
Between the indoor & outdoor units	Height difference	ft.	50			
	Piping length	ft.	100			
Refrigerant charge (R454B)			2 lb. 16 oz.			

Note: Test conditions are based on AHRI 210/240.

Rating conditions (Cooling) — Indoor: 80˚F D.B., 67˚F W.B., Outdoor: 95˚F D.B., (75˚F W.B.)
(Heating) — Indoor: 70˚F D.B., 60˚F W.B., Outdoor: 47˚F D.B., 43˚F W.B.

OPERATING RANGE

(1) POWER SUPPLY

	Rated voltage	Guaranteed voltage (V)
Outdoor unit	208/230 V 1 phase 60 Hz	Min. 198 — 208 — 230 — Max. 253

5 OUTLINES AND DIMENSIONS

SUZ-AA18NL-U1 **SUZ-AA24NL-U1** **SUZ-AA30NL-U1** **SUZ-AA36NL-U1**
SUZ-AA09NLHZ-U1 **SUZ-AA12NLHZ-U1** **SUZ-AA15NLHZ-U1** **SUZ-AA18NLHZ-U1**

Unit: inch

REQUIRED SPACE

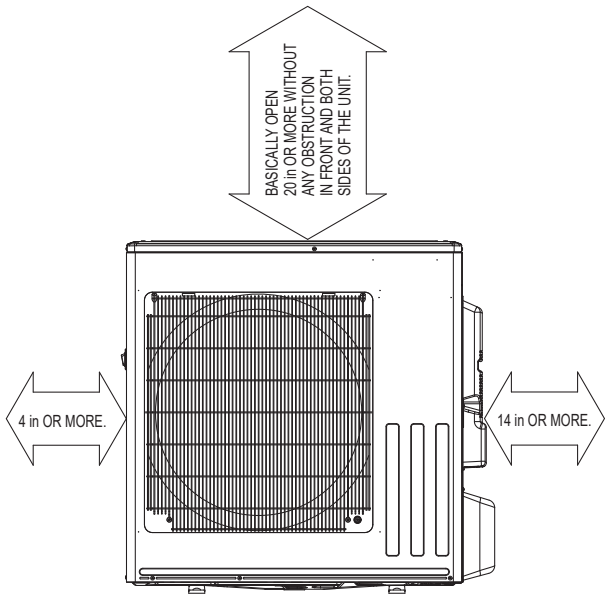

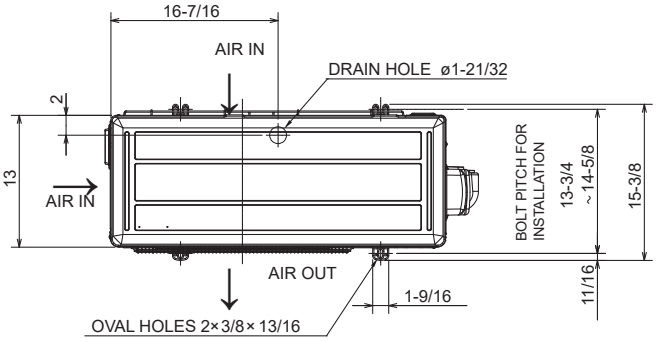

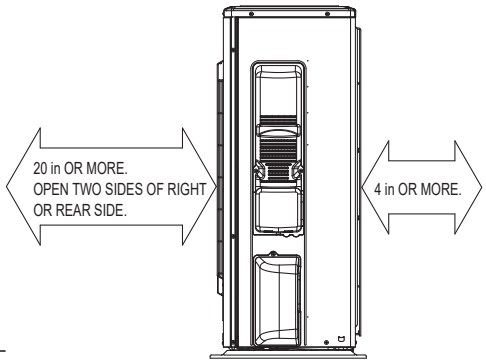

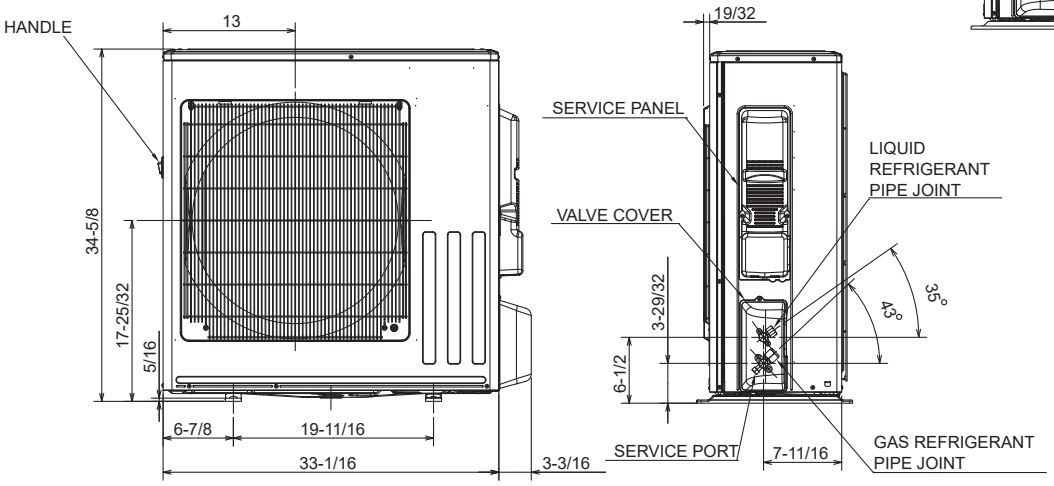

REFRIGERANT PIPE JOINT	LIQUID REFRIGERANT PIPE	FLARED ø6.35 (1/4")
	GAS REFRIGERANT PIPE	AA09/12 : FLARED ø9.52 (3/8") AA15/18 : FLARED ø12.7 (1/2") AA24/30/36 : FLARED ø15.88 (5/8")

6 WIRING DIAGRAM

SUZ-AA18NL-U1

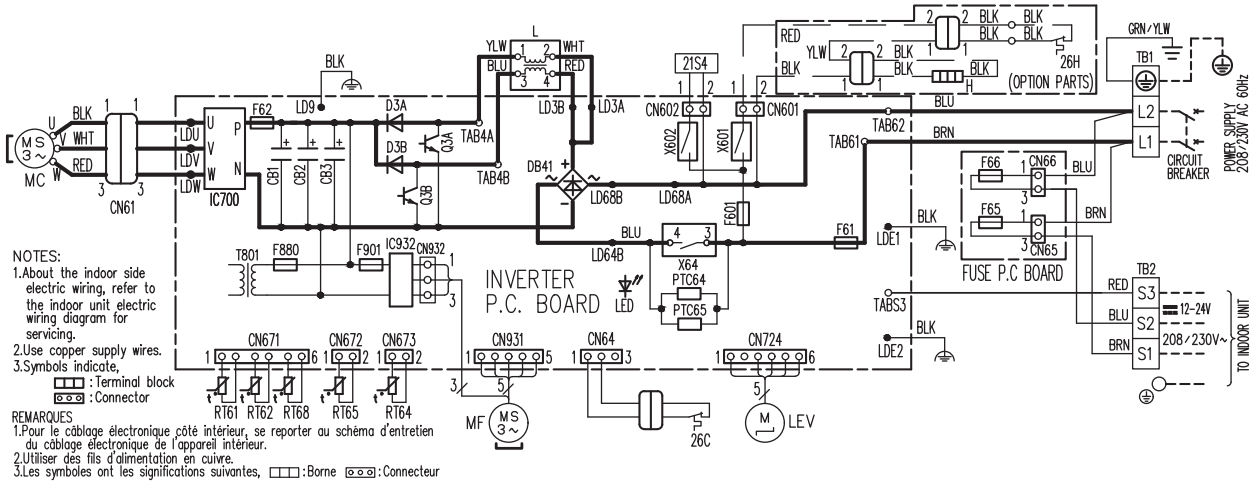

SYMBOL	NAME	SYMBOL	NAME	SYMBOL	NAME
CB1,CB2,CB3	SMOOTHING CAPACITOR	L	REACTOR	RT65	AMBIENT TEMP. THERMISTOR
CN61	CONNECTOR	LED	LED	RT68	OUTDOOR HEAT EXCHANGER TEMP. THERMISTOR
DB41	DIODE MODULE	LEV	EXPANSION VALVE COIL		
D3A,D3B	DIODE	MC	COMPRESSOR	TB1,TB2	TERMINAL BLOCK
F61	FUSE (25A 250V)	MF	FAN MOTOR	T801	TRANSFORMER
F62	FUSE (15A 250V)	PTC64,PTC65	CIRCUIT PROTECTION	X64,X601,X602	RELAY
F65,F66	FUSE (T6.3AL250V)	Q3A,Q3B	SWITCHING POWER TRANSISTOR	21S4	REVERSING VALVE COIL
F601,F880,F901	FUSE (T3.15AL250V)	RT61	DEFROST TEMP. THERMISTOR	26C	COMPRESSOR PROTECTOR
H	DEFROST HEATER	RT62	DISCHARGE TEMP. THERMISTOR	26H	HEATER PROTECTOR (OPTION PARTS)
IC700,IC932	POWER MODULE	RT64	FIN TEMP. THERMISTOR		

SUZ-AA24NL-U1 SUZ-AA30NL-U1 SUZ-AA36NL-U1

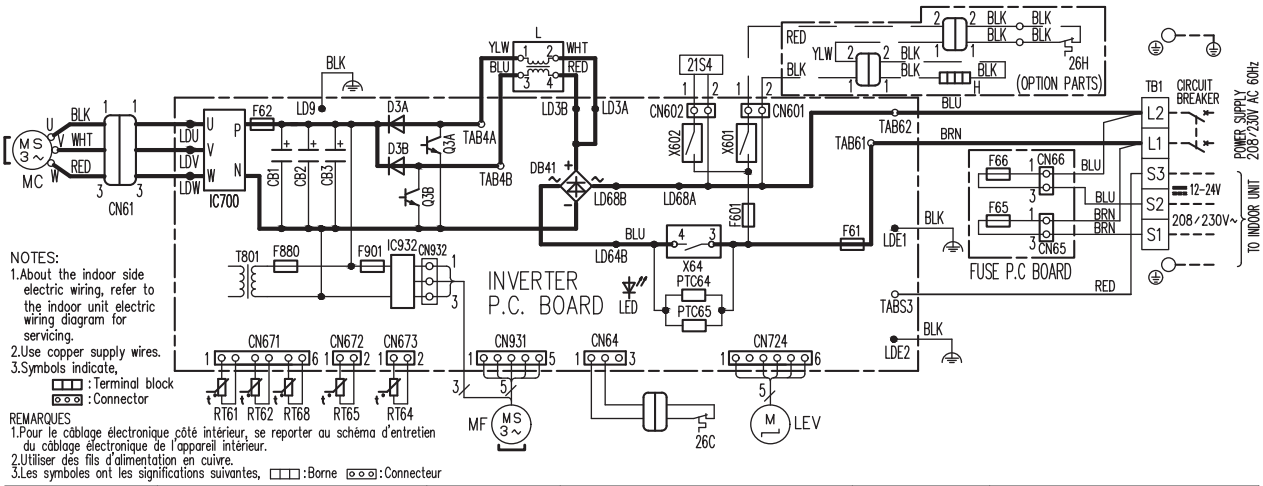

SYMBOL	NAME	SYMBOL	NAME	SYMBOL	NAME
CB1,CB2,CB3	SMOOTHING CAPACITOR	L	REACTOR	RT65	AMBIENT TEMP. THERMISTOR
CN61	CONNECTOR	LED	LED	RT68	OUTDOOR HEAT EXCHANGER TEMP. THERMISTOR
DB41	DIODE MODULE	LEV	EXPANSION VALVE COIL		
D3A,D3B	DIODE	MC	COMPRESSOR	TB1	TERMINAL BLOCK
F61	FUSE (25A 250V)	MF	FAN MOTOR	T801	TRANSFORMER
F62	FUSE (15A 250V)	PTC64,PTC65	CIRCUIT PROTECTION	X64,X601,X602	RELAY
F65,F66	FUSE (T6.3AL250V)	Q3A,Q3B	SWITCHING POWER TRANSISTOR	21S4	REVERSING VALVE COIL
F601,F880,F901	FUSE (T3.15AL250V)	RT61	DEFROST TEMP. THERMISTOR	26C	COMPRESSOR PROTECTOR
H	DEFROST HEATER	RT62	DISCHARGE TEMP. THERMISTOR	26H	HEATER PROTECTOR (OPTION PARTS)
IC700,IC932	POWER MODULE	RT64	FIN TEMP. THERMISTOR		

SUZ-AA09NLHZ-U1 SUZ-AA12NLHZ-U1 SUZ-AA15NLHZ-U1 SUZ-AA18NLHZ-U1

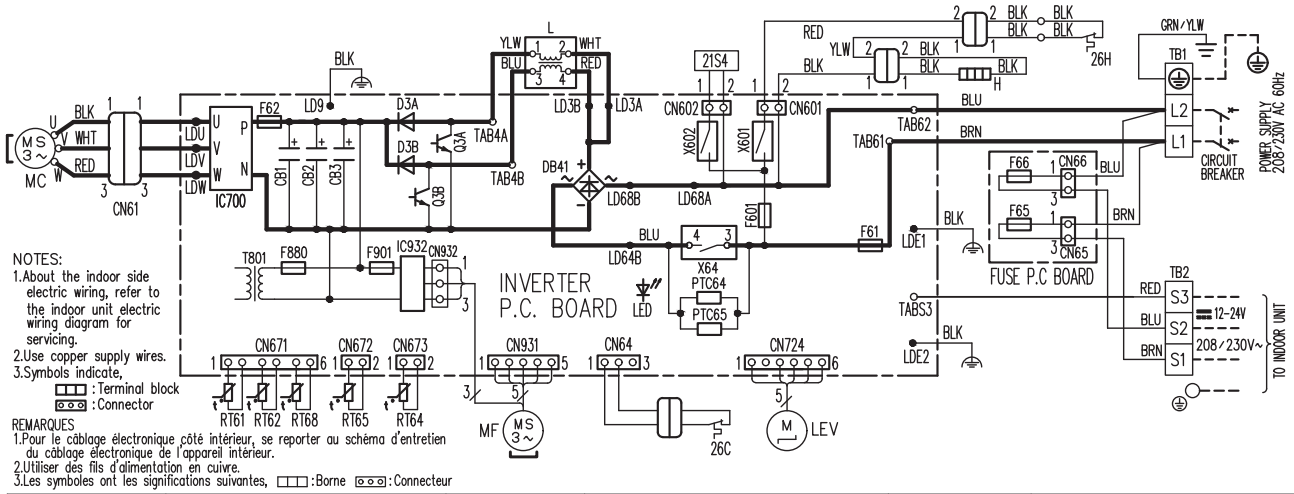

SYMBOL	NAME	SYMBOL	NAME	SYMBOL	NAME
CB1,CB2,CB3	SMOOTHING CAPACITOR	L	REACTOR	RT65	AMBIENT TEMP. THERMISTOR
CN61	CONNECTOR	LED	LED	RT68	OUTDOOR HEAT EXCHANGER TEMP. THERMISTOR
DB41	DIODE MODULE	LEV	EXPANSION VALVE COIL		
D3A,D3B	DIODE	MC	COMPRESSOR	TB1,TB2	TERMINAL BLOCK
F61	FUSE (25A 250V)	MF	FAN MOTOR	T801	TRANSFORMER
F62	FUSE (15A 250V)	PTC64,PTC65	CIRCUIT PROTECTION	X64,X601,X602	RELAY
F65,F66	FUSE (T6.3AL250V)	Q3A,Q3B	SWITCHING POWER TRANSISTOR	21S4	REVERSING VALVE COIL
F601,F880,F901	FUSE (T3.15AL250V)	RT61	DEFROST TEMP. THERMISTOR	26C	COMPRESSOR PROTECTOR
H	DEFROST HEATER	RT62	DISCHARGE TEMP. THERMISTOR	26H	HEATER PROTECTOR
IC700,IC932	POWER MODULE	RT64	FIN TEMP. THERMISTOR		

7 REFRIGERANT SYSTEM DIAGRAM

SUZ-AA24NL-U1 SUZ-AA30NL-U1 SUZ-AA36NL-U1

Unit: inch (mm)

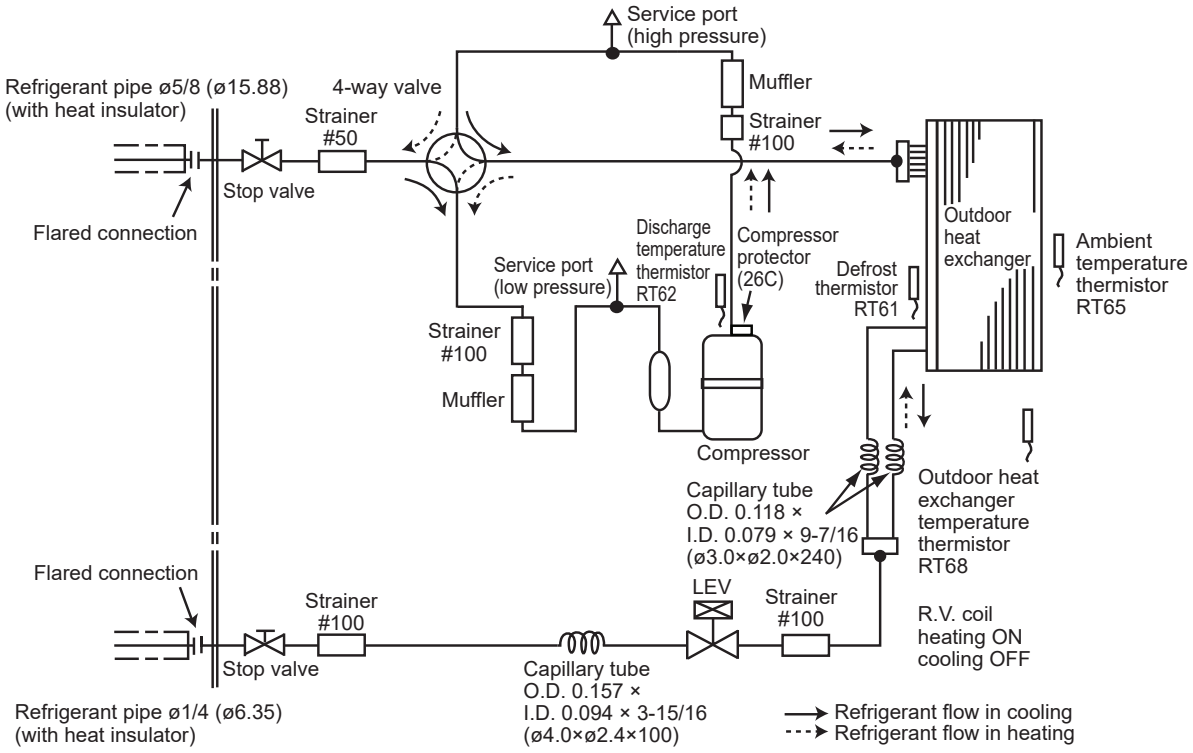

SUZ-AA09NLHZ-U1 SUZ-AA12NLHZ-U1 SUZ-AA18NLHZ-U1 SUZ-AA18NL-U1

Unit: inch (mm)

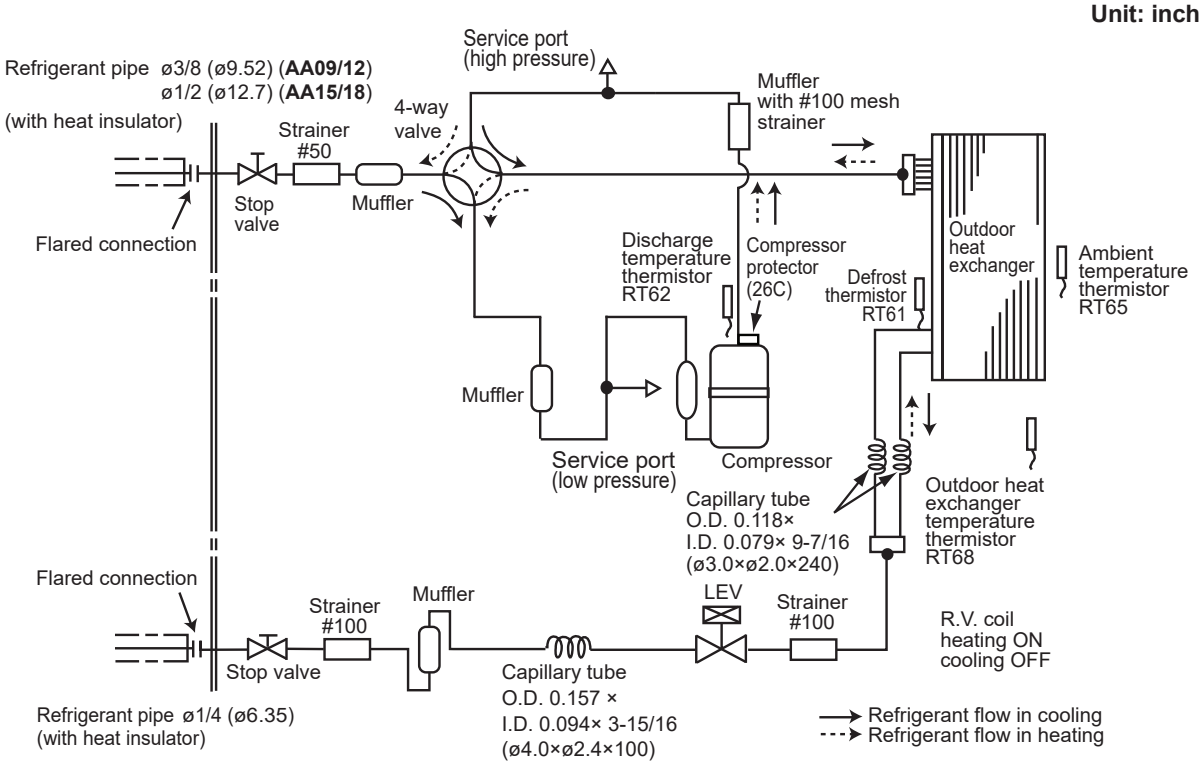

MAX. REFRIGERANT PIPING LENGTH and MAX. HEIGHT DIFFERENCE

Model	Refrigerant piping: ft.		Piping size O.D: in.	
	Max. Length A	Max. Height difference B	Gas	Liquid
SUZ-AA09/12NLHZ	100	50	3/8	1/4
SUZ-AA15/18NLHZ SUZ-AA18NL		50	1/2	1/4
SUZ-AA24/30/36NL		100	5/8	1/4

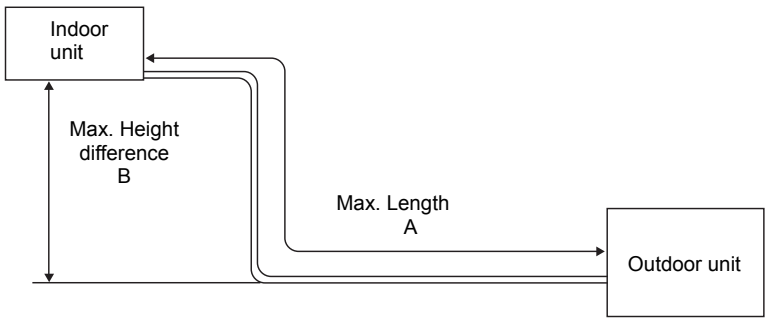

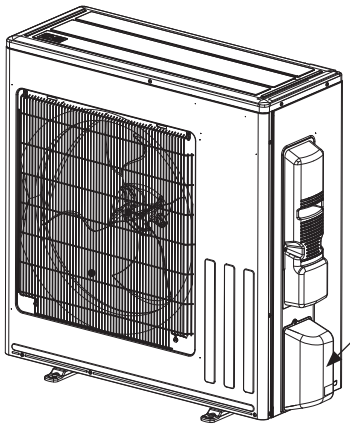

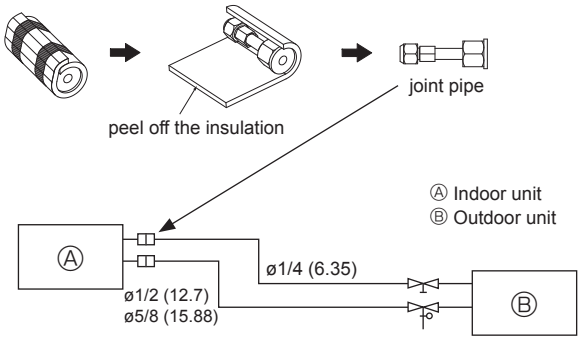

*When connecting a PEAD or SVZ to a SUZ-AA24/30/36NL(H)-U1, use the joint pipe included with the side cover of outdoor unit to connect the liquid pipe of the indoor unit.

ADDITIONAL REFRIGERANT CHARGE (R454B: oz.)

NOTE: Refrigerant piping exceeding 25 ft. requires additional refrigerant charge according to the calculation.

Model	Outdoor unit precharged	Refrigerant piping length (one way): ft.								
		25	30	40	50	60	70	80	90	100
SUZ-AA09/12/15/18NLHZ SUZ-AA18NL	2 lb. 16 oz.	0	1.08	3.24	5.40	7.56	9.72	11.88	14.04	16.20

Calculation: X oz. = 1.08/5 oz./ft. × (Refrigerant piping length (ft.) - 25)

Model	Outdoor unit precharged	Refrigerant piping length (one way): ft.								
		25	30	40	50	60	70	80	90	100
SUZ-AA24/30/36NL	3 lb. 4 oz.	0	1.08	3.24	5.40	7.56	9.72	11.88	14.04	16.20

Calculation: X oz. = 1.08/5 oz./ft. × (Refrigerant piping length (ft.) - 25)

8 DATA

STANDARD OPERATION DATA

Representative matching				SLZ-AF09NL		SLZ-AF12NL		SLZ-AF15NL		SLZ-AF18NL		SLZ-AF18NL	
Item			Unit	Cooling	Heating	Cooling	Heating	Cooling	Heating	Cooling	Heating	Cooling	Heating
Total	Capacity		W	9000	12000	12000	15000	15000	17000	18000	20000	18000	20000
	SHF		–	0.88	-	0.80	-	0.75	-	0.70	-	0.70	-
	Input		kW	720	1020.00	860.00	1290	1180	1500	1500	1880	1500	1880
Electrical circuit	Indoor unit			SLZ-AF09NL		SLZ-AF12NL		SLZ-AF15NL		SLZ-AF18NL		SLZ-AF18NL	
	Phase, Hz			1, 60	1, 60	1, 60	1, 60	1, 60	1, 60	1, 60	1, 60	1, 60	1, 60
	Volts			208/230	208/230	208/230	208/230	208/230	208/230	208/230	208/230	208/230	208/230
	Current		A	0.20	0.15	0.24	0.19	0.32	0.27	0.43	0.38	0.43	0.38
	Outdoor unit model			SUZ-AA09NLHZ		SUZ-AA12NLHZ		SUZ-AA15NLHZ		SUZ-AA18NLHZ		SUZ-AA18NL	
	Phase, Hz			1, 60	1, 60	1, 60	1, 60	1, 60	1, 60	1, 60	1, 60	1, 60	1, 60
	Volts			208/230	208/230	208/230	208/230	208/230	208/230	208/230	208/230	208/230	208/230
	Current		A	2.9/2.6	4.5/4.1	3.9/3.5	5.7/5.1	5.2/4.7	7.3/6.5	6.8/6.1	8.6/7.8	6.8/6.1	8.6/7.8
Refrigerant circuit	Condensing pressure		PSIG	299	363	306	388	319	411	332	444	332	444
	Suction pressure		PSIG	145	108	140	104	126	103	113	102	113	102
	Discharge temperature		°F	143	149	142	158	153	179	161	191	161	191
	Condensing temperature		°F	100	108	102	112	103	117	107	127	107	127
	Suction temperature		°F	57	41	55	39	49	38	46	38	46	38
	Ref. pipe length		ft.	25		25		25		25		25	
	Refrigerant charge (R454B)		–	2 lb. 16 oz.		2 lb. 16 oz.		2 lb. 16 oz.		2 lb. 16 oz.		2 lb. 16 oz.	
Indoor unit	Intake air temperature	DB	°F	80	70	80	70	80	70	80	70	80	70
		WB	°F	67	60	67	60	67	60	67	60	67	60
	Discharge air temperature	DB	°F	59	102	58	105	55	108	56	110	56	110
		WB	°F	58	71	57	71	54	72	54	73	54	73
Outdoor unit	Intake air temperature	DB	°F	95	47	95	47	95	47	95	47	95	47
		WB	°F	75	43	75	43	75	43	75	43	75	43

Representative matching				SEZ-AE09NL		SEZ-AE12NL		SEZ-AE15NL		SEZ-AE18NL		SEZ-AE18NL	
Item			Unit	Cooling	Heating	Cooling	Heating	Cooling	Heating	Cooling	Heating	Cooling	Heating
Total	Capacity		W	9000	12000	12000	15000	15000	18000	18000	20000	18000	20000
	SHF		–	0.80	-	0.84	-	0.88	-	0.83	-	0.83	-
	Input		kW	800	1150.00	920.00	1210	1220	1420	1450	1550	1450	1550
Electrical circuit	Indoor unit			SEZ-AE09NL		SEZ-AE12NL		SEZ-AE15NL		SEZ-AE18NL		SEZ-AE18NL	
	Phase, Hz			1, 60	1, 60	1, 60	1, 60	1, 60	1, 60	1, 60	1, 60	1, 60	1, 60
	Volts			208/230	208/230	208/230	208/230	208/230	208/230	208/230	208/230	208/230	208/230
	Current		A	0.50	0.39	0.57	0.46	0.74	0.63	0.74	0.63	0.74	0.63
	Outdoor unit model			SUZ-AA09NLHZ		SUZ-AA12NLHZ		SUZ-AA15NLHZ		SUZ-AA18NLHZ		SUZ-AA18NL	
	Phase, Hz			1, 60	1, 60	1, 60	1, 60	1, 60	1, 60	1, 60	1, 60	1, 60	1, 60
	Volts			208/230	208/230	208/230	208/230	208/230	208/230	208/230	208/230	208/230	208/230
	Current		A	3.2/2.9	5.0/4.5	3.3/3.0	5.4/4.8	4.6/4.1	6.4/5.7	5.6/5.0	6.8/6.1	5.6/5.0	6.8/6.1
Refrigerant circuit	Condensing pressure		PSIG	306	423	307	351	319	345	329	338	329	338
	Suction pressure		PSIG	120	111	142	104	138	101	137	99	137	99
	Discharge temperature		°F	146	167	142	147	150	157	152	156	152	156
	Condensing temperature		°F	101	123	102	105	103	104	105	102	105	102
	Suction temperature		°F	52	41	56	39	54	37	53	36	53	36
	Ref. pipe length		ft.	25		25		25		25		25	
	Refrigerant charge (R454B)		–	2 lb. 16 oz.		2 lb. 16 oz.		2 lb. 16 oz.		2 lb. 16 oz.		2 lb. 16 oz.	
Indoor unit	Intake air temperature	DB	°F	80	70	80	70	80	70	80	70	80	70
		WB	°F	67	60	67	60	67	60	67	60	67	60
	Discharge air temperature	DB	°F	60	105	57	104	58	100	58	100	58	100
		WB	°F	58	71	57	71	58	70	58	70	58	70
Outdoor unit	Intake air temperature	DB	°F	95	47	95	47	95	47	95	47	95	47
		WB	°F	75	43	75	43	75	43	75	43	75	43

Representative matching				PEAD-AA09NL		PEAD-AA12NL		PEAD-AA15NL		PEAD-AA18NL		PEAD-AA18NL	
Item			Unit	Cooling	Heating	Cooling	Heating	Cooling	Heating	Cooling	Heating	Cooling	Heating
Total	Capacity		W	9000	12000	12000	15000	15000	18000	18000	20000	18000	20000
	SHF		–	0.93	-	0.87	-	0.88	-	0.82	-	0.82	-
	Input		kW	750	1010.00	880.00	1200	1150	1290	1410	1510	1410	1510
Electrical circuit	Indoor unit			PEAD-AA09NL		PEAD-AA12NL		PEAD-AA15NL		PEAD-AA18NL		PEAD-AA18NL	
	Phase, Hz			1, 60	1, 60	1, 60	1, 60	1, 60	1, 60	1, 60	1, 60	1, 60	1, 60
	Volts			208/230	208/230	208/230	208/230	208/230	208/230	208/230	208/230	208/230	208/230
	Current		A	0.39	0.39	0.50	0.50	0.72	0.72	0.72	0.72	0.72	0.72
	Outdoor unit model			SUZ-AA09NLHZ		SUZ-AA12NLHZ		SUZ-AA15NLHZ		SUZ-AA18NLHZ		SUZ-AA18NL	
	Phase, Hz			1, 60	1, 60	1, 60	1, 60	1, 60	1, 60	1, 60	1, 60	1, 60	1, 60
	Volts			208/230	208/230	208/230	208/230	208/230	208/230	208/230	208/230	208/230	208/230
	Current		A	2.7/2.4	4.0/3.6	3.6/3.2	5.1/4.5	4.4/3.9	5.8/5.2	5.8/5.1	6.7/6.0	5.8/5.1	6.7/6.0
Refrigerant circuit	Condensing pressure		PSIG	298	349	306	356	319	326	328	343	328	343
	Suction pressure		PSIG	148	108	144	104	140	101	132	99	132	99
	Discharge temperature		°F	143	145	141	148	150	151	154	158	154	158
	Condensing temperature		°F	100	105	102	106	103	100	51	103	105	103
	Suction temperature		°F	58	41	57	39	55	37	51	36	51	36
	Ref. pipe length		ft.	25		25		25		25		25	
	Refrigerant charge (R454B)		–	2 lb. 16 oz.		2 lb. 16 oz.		2 lb. 16 oz.		2 lb. 16 oz.		2 lb. 16 oz.	
Indoor unit	Intake air temperature	DB	°F	80	70	80	70	80	70	80	70	80	70
		WB	°F	67	60	67	60	67	60	67	60	67	60
	Discharge air temperature	DB	°F	59	102	59	100	58	99	56	103	56	103
		WB	°F	59	71	58	70	58	70	56	71	56	71
Outdoor unit	Intake air temperature	DB	°F	95	47	95	47	95	47	95	47	95	47
		WB	°F	75	43	75	43	75	43	75	43	75	43

Representative matching				PEAD-AA24NL		PEAD-AA30NL		PEAD-AA36NL	
Item			Unit	Cooling	Heating	Cooling	Heating	Cooling	Heating
Total	Capacity		W	24000	25000	27000	30000	33000	34000
	SHF		–	0.79	-	0.82	-	0.85	-
	Input		kW	1900	2020.00	2270.00	2600	3070	2670
Electrical circuit	Indoor unit			**PEAD-AA24NL**		**PEAD-AA30NL**		**PEAD-AA36NL**	
	Phase, Hz			1, 60	1, 60	1, 60	1, 60	1, 60	1, 60
	Volts			208/230	208/230	208/230	208/230	208/230	208/230
	Current		A	0.85	0.85	1.10	1.10	1.60	1.60
	Outdoor unit model			**SUZ-AA24NL**		**SUZ-AA30NL**		**SUZ-AA36NL**	
	Phase, Hz			1, 60	1, 60	1, 60	1, 60	1, 60	1, 60
	Volts			208/230	208/230	208/230	208/230	208/230	208/230
	Current		A	8.3/7.4	9.3/8.3	10.0/8.9	11.8/10.5	12.2/10.9	11.0/9.8
Refrigerant circuit	Condensing pressure		PSIG	348	348	359	358	381	309
	Suction pressure		PSIG	124	94	123	89	122	81
	Discharge temperature		°F	163	169	164	179	183	169
	Condensing temperature		°F	109	109	110	110	114	96
	Suction temperature		°F	53	38	49	37	56	36
	Ref. pipe length		ft.	25		25		25	
	Refrigerant charge (R454B)		–	3 lb. 4 oz.		3 lb. 4 oz.		3 lb. 4 oz.	
Indoor unit	Intake air temperature	DB	°F	80	70	80	70	80	70
		WB	°F	67	60	67	60	67	60
	Discharge air temperature	DB	°F	55	103	56	103	58	97
		WB	°F	55	71	56	71	57	69
Outdoor unit	Intake air temperature	DB	°F	95	47	95	47	95	47
		WB	°F	75	43	75	43	75	43

Representative matching				SVZ-AP12NL		SVZ-AP18NL		SVZ-AP18NL		SVZ-AP24NL		SVZ-AP30NL	
Item			Unit	Cooling	Heating	Cooling	Heating	Cooling	Heating	Cooling	Heating	Cooling	Heating
Total	Capacity		W	12000	15000	18000	20000	18000	20000	22800	25000	27000	30000
	SHF		–	0.89	-	0.83	-	0.83	-	0.73	-	0.77	-
	Input		kW	950	1200.00	1490.00	1530	1490	1530	1930	2130	2400	2500
Electrical circuit	Indoor unit			**SVZ-AP12NL**		**SVZ-AP18NL**		**SVZ-AP18NL**		**SVZ-AP24NL**		**SVZ-AP30NL**	
	Phase, Hz			1, 60	1, 60	1, 60	1, 60	1, 60	1, 60	1, 60	1, 60	1, 60	1, 60
	Volts			208/230	208/230	208/230	208/230	208/230	208/230	208/230	208/230	208/230	208/230
	Current		A	0.90	0.81	1.44	1.29	1.44	1.29	1.60	1.40	2.00	1.70
	Outdoor unit model			**SUZ-AA12NLHZ**		**SUZ-AA18NLHZ**		**SUZ-AA18NL**		**SUZ-AA24NL**		**SUZ-AA30NL**	
	Phase, Hz			1, 60	1, 60	1, 60	1, 60	1, 60	1, 60	1, 60	1, 60	1, 60	1, 60
	Volts			208/230	208/230	208/230	208/230	208/230	208/230	208/230	208/230	208/230	208/230
	Current		A	3.3/2.9	4.7/4.1	5.1/4.4	6.2/5.4	5.1/4.4	6.2/5.4	7.4/6.5	9.1/8.1	9.5/8.4	10.2/9.0
Refrigerant circuit	Condensing pressure		PSIG	306	335	328	335	328	335	350	360	355	315
	Suction pressure		PSIG	145	104	135	99	135	99	122	95	129	87
	Discharge temperature		°F	141	142	153	154	153	154	168	177	165	164
	Condensing temperature		°F	102	102	105	100	105	100	57	110	110	101
	Suction temperature		°F	57	39	52	36	52	36	57	38	56	37
	Ref. pipe length		ft.	25		25		25		25		25	
	Refrigerant charge (R454B)		–	2 lb. 16 oz.		2 lb. 16 oz.		2 lb. 16 oz.		3 lb. 4 oz.		3 lb. 4 oz.	
Indoor unit	Intake air temperature	DB	°F	80	70	80	70	80	70	80	70	80	70
		WB	°F	67	60	67	60	67	60	67	60	67	60
	Discharge air temperature	DB	°F	58	101	58	97	58	97	57	106	56	102
		WB	°F	58	70	58	69	58	69	56	72	56	71
Outdoor unit	Intake air temperature	DB	°F	95	47	95	47	95	47	95	47	95	47
		WB	°F	75	43	75	43	75	43	75	43	75	43

Representative matching				SVZ-AP36NL	
Item			Unit	Cooling	Heating
Total	Capacity		W	33000	34200
	SHF		–	0.72	-
	Input		kW	3530	2810.00
Electrical circuit	Indoor unit			SVZ-AP36NL	
	Phase, Hz			1,60	1,60
	Volts			208/230	208/230
	Current		A	3.00	2.70
	Outdoor unit model			SUZ-AA36NL	
	Phase, Hz			1, 60	1, 60
	Volts			208/230	208/230
	Current		A	13.2/11.6	10.8/9.5
Refrigerant circuit	Condensing pressure		PSIG	381	305
	Suction pressure		PSIG	112	81
	Discharge temperature		°F	189	167
	Condensing temperature		°F	114	94
	Suction temperature		°F	52	35
	Ref. pipe length		ft.	25	
	Refrigerant charge (R454B)		–	3 lb. 4 oz.	
Indoor unit	Intake air temperature	DB	°F	80	70
		WB	°F	67	60
	Discharge air temperature	DB	°F	54	97
		WB	°F	54	69
Outdoor unit	Intake air temperature	DB	°F	95	47
		WB	°F	75	43

Representative matching				MLZ-KX09NL		MLZ-KX12NL		MLZ-KX18NL		MLZ-KX18NL	
Item			Unit	Cooling	Heating	Cooling	Heating	Cooling	Heating	Cooling	Heating
Total	Capacity		W	9000	12000	12000	15000	16400	19000	16400	19000
	SHF		–	0.81	-	0.73	-	0.71	-	0.71	-
	Input		kW	730	1030.00	900.00	1330	1390	1750	1390	1750
Electrical circuit	Indoor unit			MLZ-KX09NL		MLZ-KX12NL		MLZ-KX18NL		MLZ-KX18NL	
	Phase, Hz			1, 60	1, 60	1, 60	1, 60	1, 60	1, 60	1, 60	1, 60
	Volts			208/230	208/230	208/230	208/230	208/230	208/230	208/230	208/230
	Current		A	0.40	0.40	0.40	0.40	0.40	0.40	0.40	0.40
	Outdoor unit model			SUZ-AA09NLHZ		SUZ-AA12NLHZ		SUZ-AA18NLHZ		SUZ-AA18NL	
	Phase, Hz			1, 60	1, 60	1, 60	1, 60	1, 60	1, 60	1, 60	1, 60
	Volts			208/230	208/230	208/230	208/230	208/230	208/230	208/230	208/230
	Current		A	3.1/2.8	4.2/3.8	4.2/3.8	5.2/4.6	6.3/5.7	7.8/7.0	6.3/5.7	7.8/7.0
Refrigerant circuit	Condensing pressure		PSIG	299	369	307	409	324	426	324	426
	Suction pressure		PSIG	139	108	129	104	114	100	114	100
	Discharge temperature		°F	143	151	144	164	165	185	165	185
	Condensing temperature		°F	100	109	102	112	104	120	104	120
	Suction temperature		°F	55	41	51	39	49	37	49	37
	Ref. pipe length		ft.	25		25		25		25	
	Refrigerant charge (R454B)		–	2 lb. 16 oz.		2 lb. 16 oz.		2 lb. 16 oz.		2 lb. 16 oz.	
Indoor unit	Intake air temperature	DB	°F	80	70	80	70	80	70	80	70
		WB	°F	67	60	67	60	67	60	67	60
	Discharge air temperature	DB	°F	55	111	52	118	51	116	51	116
		WB	°F	55	73	52	75	51	75	51	75
Outdoor unit	Intake air temperature	DB	°F	95	47	95	47	95	47	95	47
		WB	°F	75	43	75	43	75	43	75	43

Representative matching				MSZ-EX09NL(B/S/W)		MSZ-EX12NL(B/S/W)		MSZ-EX15NL(B/S/W)		MSZ-EX18NL(B/S/W)		MSZ-EX18NL(B/S/W)	
Item			Unit	Cooling	Heating	Cooling	Heating	Cooling	Heating	Cooling	Heating	Cooling	Heating
Total	Capacity		W	9000	12000	12000	15000	15000	17000	16400	20000	16400	20000
	SHF		–	0.96	-	0.82	-	0.73	-	0.69	-	0.69	-
	Input		kW	710	900.00	850.00	1150	1260	1330	1390	1700	1390	1700
Electrical circuit	Indoor unit			MSZ-EX09NL(B/S/W)		MSZ-EX12NL(B/S/W)		MSZ-EX15NL(B/S/W)		MSZ-EX18NL(B/S/W)		MSZ-EX18NL(B/S/W)	
	Phase, Hz			1, 60	1, 60	1, 60	1, 60	1, 60	1, 60	1, 60	1, 60	1, 60	1, 60
	Volts			208/230	208/230	208/230	208/230	208/230	208/230	208/230	208/230	208/230	208/230
	Current		A	2.65	3.78	3.65	4.66	5.12	6.08	6.12	7.01	6.12	7.01
	Outdoor unit model			SUZ-AA09NLHZ		SUZ-AA12NLHZ		SUZ-AA15NLHZ		SUZ-AA18NLHZ		SUZ-AA18NL	
	Phase, Hz			1, 60	1, 60	1, 60	1, 60	1, 60	1, 60	1, 60	1, 60	1, 60	1, 60
	Volts			208/230	208/230	208/230	208/230	208/230	208/230	208/230	208/230	208/230	208/230
	Current		A	2.7/2.4	4.0/3.6	3.8/3.4	4.9/4.4	5.3/4.8	6.4/5.7	6.4/5.8	7.4/6.7	6.4/5.8	7.4/6.7
Refrigerant circuit	Condensing pressure		PSIG	298	322	306	351	320	372	324	401	324	401
	Suction pressure		PSIG	149	108	140	104	116	102	114	99	114	99
	Discharge temperature		°F	142	137	142	147	156	166	165	178	165	178
	Condensing temperature		°F	100	98	102	104	104	109	104	114	104	114
	Suction temperature		°F	59	41	55	39	45	38	49	36	49	36
	Ref. pipe length		ft.	25		25		25		25		25	
	Refrigerant charge (R454B)		–	2 lb. 16 oz.		2 lb. 16 oz.		2 lb. 16 oz.		2 lb. 16 oz.		2 lb. 16 oz.	
Indoor unit	Intake air temperature	DB	°F	80	70	80	70	80	70	80	70	80	70
		WB	°F	67	60	67	60	67	60	67	60	67	60
	Discharge air temperature	DB	°F	60	94	57	102	52	105	52	111	52	111
		WB	°F	59	68	56	71	52	72	52	73	52	73
Outdoor unit	Intake air temperature	DB	°F	95	47	95	47	95	47	95	47	95	47
		WB	°F	75	43	75	43	75	43	75	43	75	43

Representative matching				MFZ-KX09NL		MFZ-KX12NL		MFZ-KX15NL		MFZ-KX18NL		MFZ-KX18NL	
Item			Unit	Cooling	Heating	Cooling	Heating	Cooling	Heating	Cooling	Heating	Cooling	Heating
Total	Capacity		W	9000	12000	12000	15000	15000	17000	18000	20000	18000	20000
	SHF		–	0.96	-	0.82	-	0.78	-	0.75	-	0.75	-
	Input		kW	720	910.00	860.00	1170	1170	1270	1450	1690	1450	1690
Electrical circuit	Indoor unit			**MFZ-KX09NL**		**MFZ-KX12NL**		**MFZ-KX15NL**		**MFZ-KX18NL**		**MFZ-KX18NL**	
	Phase, Hz			1, 60	1, 60	1,6 0	1, 60	1, 60	1, 60	1, 60	1, 60	1, 60	1, 60
	Volts			208/230	208/230	208/230	208/230	208/230	208/230	208/230	208/230	208/230	208/230
	Current		A	0.14	0.14	0.14	0.14	0.17	0.17	0.17	0.17	0.17	0.17
	Outdoor unit model			**SUZ-AA09NLHZ**		**SUZ-AA12NLHZ**		**SUZ-AA15NLHZ**		**SUZ-AA18NLHZ**		**SUZ-AA18NL**	
	Phase, Hz			1, 60	1, 60	1, 60	1, 60	1, 60	1, 60	1, 60	1, 60	1, 60	1, 60
	Volts			208/230	208/230	208/230	208/230	208/230	208/230	208/230	208/230	208/230	208/230
	Current		A	2.7/2.5	3.9/3.5	4/3.6	5.2/4.7	5.2/4.7	6.4/5.8	6.8/6.2	7.3/6.6	6.8/6.2	7.3/6.6
Refrigerant circuit	Condensing pressure		PSIG	299	322	306	360	320	349	330	387	330	387
	Suction pressure		PSIG	149	108	140	104	131	102	126	99	126	99
	Discharge temperature		°F	143	137	142	150	152	158	156	173	156	173
	Condensing temperature		°F	59	99	102	105	104	105	105	112	105	112
	Suction temperature		°F	100	41	55	40	51	38	49	36	49	36
	Ref. pipe length		ft.	25		25		25		25		25	
	Refrigerant charge (R454B)		–	2 lb. 16 oz.		2 lb. 16 oz.		2 lb. 16 oz.		2 lb. 16 oz.		2 lb. 16 oz.	
Indoor unit	Intake air temperature	DB	°F	80	70	80	70	80	70	80	70	80	70
		WB	°F	67	60	67	60	67	60	67	60	67	60
	Discharge air temperature	DB	°F	59	100	56	107	54	103	53	110	53	110
		WB	°F	59	70	56	72	54	71	53	73	53	73
Outdoor unit	Intake air temperature	DB	°F	95	47	95	47	95	47	95	47	95	47
		WB	°F	75	43	75	43	75	43	75	43	75	43

9 ACTUATOR CONTROL

9-1. OUTDOOR FAN MOTOR CONTROL

The fan motor turns ON/OFF, interlocking with the compressor.
[ON] The fan motor turns ON 5 seconds before the compressor starts up.
[OFF] The fan motor turns OFF 15 seconds after the compressor has stopped running.

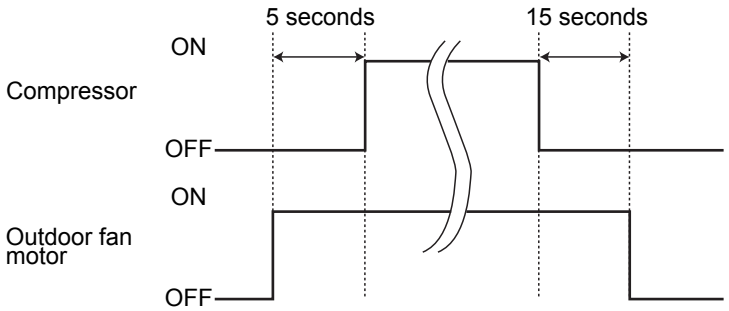

9-2. R.V. COIL CONTROL

Heating · · · · · · · · · · · · · · · · · · ON
Cooling · · · · · · · · · · · · · · · · · · OFF
Dry · OFF
NOTE: The 4-way valve reverses for 5 seconds right before start-up of the compressor.

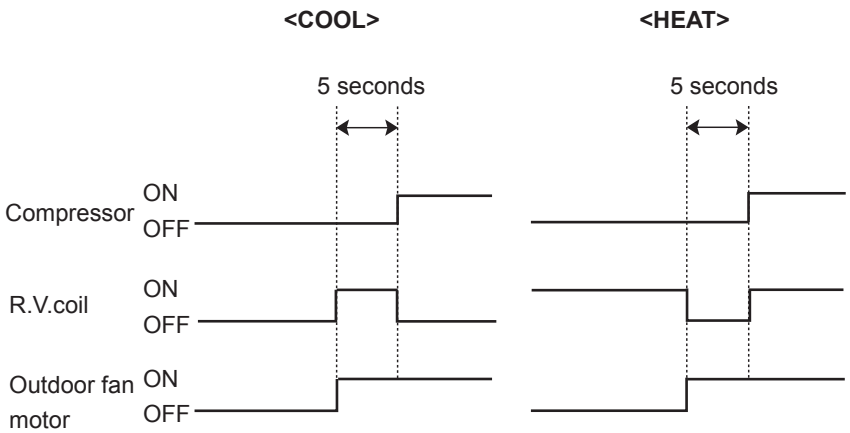

9-3. RELATION BETWEEN MAIN SENSOR AND ACTUATOR

Sensor	Purpose	Actuator				
		Compressor	LEV	Outdoor fan motor	R.V.coil	Indoor fan motor
Discharge temperature thermistor	Protection	○	○			
Indoor coil temperature thermistor	Cooling: Coil frost prevention	○				
	Heating: High pressure protection	○	○			
Defrost thermistor	Heating: Defrosting	○	○	○	○	○
Fin temperature thermistor	Protection	○		○		
Ambient temperature thermistor	Cooling: Low ambient temperature operation	○	○	○		
Outdoor heat exchanger temperature thermistor	Cooling: Low ambient temperature operation	○	○	○		
	Cooling: High pressure protection	○	○	○		

10 SERVICE FUNCTIONS

10-1. CHANGE IN DEFROST SETTING

Changing defrost finish temperature

<JS> To change the defrost finish temperature, cut/solder the JS wire of the outdoor inverter P.C. board. (Refer to "11-6. TEST POINT DIAGRAM AND VOLTAGE".)

Jumper		Defrost finish temperature	
		SUZ-AA18NL-U1 SUZ-AA24NL-U1 SUZ-AA30NL-U1 SUZ-AA36NL-U1	SUZ-AA09NLHZ-U1 SUZ-AA12NLHZ-U1 SUZ-AA15NLHZ-U1 SUZ-AA18NLHZ-U1
JS	Soldered (Initial setting)	50°F (10°C)	
	None (Cut)	64°F (18°C)	

10-2. PRE-HEAT CONTROL SETTING

PRE-HEAT CONTROL

When moisture gets into the refrigerant cycle, it may interfere the start-up of the compressor at low outside temperature. The pre-heat control prevents this interference. The pre-heat control turns ON when outside temperature is 68°F (20°C) or below. When pre-heat control is turned ON, compressor is energized. (About 50 W)

<JK> To activate the pre-heat control, cut the JK wire of the inverter P.C. board. (Refer to "11-6. TEST POINT DIAGRAM AND VOLTAGE".)

NOTE: When the inverter P.C. board is replaced, check the Jumper wires, and cut/solder them if necessary.

11 TROUBLESHOOTING

11-1. CAUTIONS ON TROUBLESHOOTING

1. Before troubleshooting, check the following

1) Check the power supply voltage.
2) Check the indoor/outdoor connecting wire for miswiring.

2. Take care of the following during servicing

1) Before servicing the air conditioner, be sure to turn OFF the main unit first with the remote controller, and turn off the breaker.
2) Be sure to turn OFF the power supply before removing the front panel, the cabinet, the top panel, and the electronic control P.C. board.
3) When removing the electrical parts, be careful of the residual voltage of smoothing capacitor.
4) When removing the electronic control P.C. board, hold the edge of the board with care NOT to apply stress on the components.
5) When connecting or disconnecting the connectors, hold the housing of the connector. DO NOT pull the lead wires.

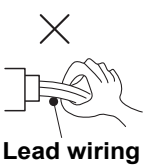

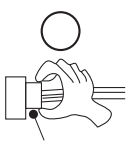

3. Troubleshooting procedure

1) First, check if the OPERATION INDICATOR lamp is blinking ON and OFF to indicate an abnormality.
2) Before servicing check that the connector and terminal are connected properly.
3) When the electronic control P.C. board seems to be defective, check the copper foil pattern for disconnection and the components for bursting and discoloration.
4) Refer to "11-2. TROUBLESHOOTING CHECK TABLE" and "11-3. HOW TO PROCEED "SELF-DIAGNOSIS"".

11-2. TROUBLE SHOOTING CHECK TABLE

No.	Symptoms	LED indication	check code	Abnormal point/ Condition	Condition	Remedy
1	Outdoor unit does not operate.	1-time blink every 2.5 seconds	UP	Outdoor power system	Overcurrent protection cut-out operates 3 consecutive times within 1 minute after the compressor gets started.	• Reconnect connector of compressor. • Refer to “11-5.Ⓐ How to check inverter/compressor". • Check stop valve.
2			U3	Outdoor thermistors	Discharge temperature thermistor shorts, or opens during compressor running.	• Refer to “11-5.Ⓖ Check of outdoor thermistors".
			U4		Fin temperature thermistor, defrost thermistor, P.C. board temperature thermistor, outdoor heat exchanger temperature thermistor or ambient temperature thermistor shorts, or opens during compressor running.	
3		6-time blink 2.5 seconds OFF	FC	Outdoor control system	Nonvolatile memory data cannot be read properly.	• Replace inverter P.C. board.
4			E8 / E9	Serial signal	The communication fails between the indoor and outdoor unit for 3 minutes.	• Check indoor/outdoor connecting wire. • Replace indoor or outdoor P.C.board if abnormality is displayed again.
5		11-time blink 2.5 seconds OFF	UE	Stop valve/ Closed valve	Closed valve is detected by compressor current.	• Check stop valve.
6		16-time flash 2.5 seconds OFF	PL	Outdoor refrigerant system abnormality	A closed valve and air trapped in the refrigerant circuit are detected based on the temperature sensed by the indoor and outdoor thermistors and the current of the compressor.	• Check for a gas leak in a connecting piping, etc. • Check stop valve. • Refer to “11-5. Ⓞ Check of outdoor refrigerant circuit".
7	'Outdoor unit stops and restarts 3 minutes later' is repeated.	2-time blink 2.5 seconds OFF		Overcurrent protection	Large current flows into intelligent power module.	• Reconnect connector of compressor. • Refer to “11-5.Ⓐ How to check inverter/compressor". • Check stop valve.
8		3-time blink 2.5 seconds OFF		Discharge temperature overheat protection	Temperature of discharge temperature thermistor exceeds 116°C, compressor stops. Compressor can restart if discharge temperature thermistor reads 100°C or less 3 minutes later.	• Check refrigerant circuit and refrigerant amount. • Refer to “11-5. ⓚ Check of LEV".
9		4-time blink 2.5 seconds OFF		Fin temperature/P.C. board temperature thermistor overheat protection	Temperature of fin temperature thermistor on the heat sink exceeds 72 to 86°C or temperature of P.C. board temperature thermistor on the inverter P.C.board exceeds 72 to 85°C.	• Check around outdoor unit. • Check outdoor unit air passage. • Refer to “11-5. ⓘ Check of outdoor fan motor".
10		5-time blink 2.5 seconds OFF		High pressure protection	Indoor coil thermistor exceeds 70°C in HEAT mode. Defrost thermistor exceeds 70°C in COOL mode.	• Check refrigerant circuit and refrigerant amount. • Check stop valve.
11		8-time blink 2.5 seconds OFF		Compressor synchronous abnormality	The waveform of compressor current is distorted.	• Reconnect connector of compressor. • Refer to “11-5.Ⓐ How to check inverter/compressor".
12		10-time blink 2.5 seconds OFF		Outdoor fan motor	Outdoor fan has stopped 3 times in a row within 30 seconds after outdoor fan start-up.	• Refer to “11-5.ⓘ Check of outdoor fan motor. • Refer to “11-5.Ⓛ Check of inverter P.C. board.
13		12-time blink 2.5 seconds OFF		Each phase current of compressor	Each phase current of compressor cannot be detected normally.	• Refer to “11-5.Ⓛ Check of inverter P.C. board".
14		13-time blink 2.5 seconds OFF		DC voltage	DC voltage of inverter cannot be detected normally.	• Refer to “11-5.Ⓐ How to check inverter/compressor".
15	Outdoor unit operates.	1-time blink 2.5 seconds OFF		Frequency drop by current protection	When the input current exceeds approximately 12A(KA18)/16A(KA24)/16A(KA30)/16A(KA36), compressor frequency lowers.	• The unit is normal, but check the following. • Check if indoor filters are clogged. • Check if refrigerant is short. • Check if indoor/outdoor unit air circulation is short cycled.
16		3-time blink 2.5 seconds OFF		Frequency drop by high pressure protection	Temperature of indoor coil thermistor exceeds 131 °F [55 °C] in HEAT mode, compressor frequency lowers.	
				Frequency drop by defrosting in COOL mode	Indoor coil thermistor reads 46 °F [8 °C] or less in COOL mode, compressor frequency lowers.	
17		4-time blink 2.5 seconds OFF		Frequency drop by discharge temperature protection	Temperature of discharge temperature thermistor exceeds 232 °F [111 °C], compressor frequency lowers.	• Check refrigerant circuit and refrigerant amount. • Refer to “11-5.ⓚ Check of LEV". • Refer to “11-5.Ⓖ Check of outdoor thermistors".
18		7-time blink 2.5 seconds OFF		Low discharge temperature protection	Temperature of discharge temperature thermistor has been 122 °F [50 °C] or less for 20 minutes.	• Refer to “11-5.ⓚ Check of LEV". • Check refrigerant circuit and refrigerant amount.
19		8-time blink 2.5 seconds OFF		PAM protection PAM: Pulse Amplitude Modulation	The overcurrent flows into IGBT (Insulated Gate Biopolar transistor: TR821) or the bus-bar voltage reaches 320 V or more, PAM stops and restarts.	This is not malfunction. PAM protection will be activated in the following cases: 1. Instantaneous power voltage drop. (Short time power failure) 2. When the power supply voltage is high.
				Zero cross detecting circuit	Zero cross signal for PAM control cannot be detected.	
20		9-time blink 2.5 seconds OFF		Inverter check mode	The connector of compressor is disconnected, inverter check mode starts.	• Check if the connector of the compressor is correctly connected. • Refer to “11-5.Ⓐ How to check inverter/compressor".
21		18-time blink 2.5 seconds OFF		Refrigerant leakage		• Check indoor unit.
22		19-time blink 2.5 seconds OFF		Refrigerant sensor error		• Check indoor unit.
23		20-time blink 2.5 seconds OFF		Abnormality of combination with indoor unit		• Check indoor unit.

NOTE: 1. The location of LED is illustrated at the right figure. Refer to "11-6. TEST POINT DIAGRAM".
2. LED is lighted during normal operation.

Inverter P.C. board

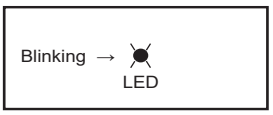

The blinking frequency shows the number of times the LED blinks after every 2.5-second OFF.
(Example) When the blinking frequency is “2”.

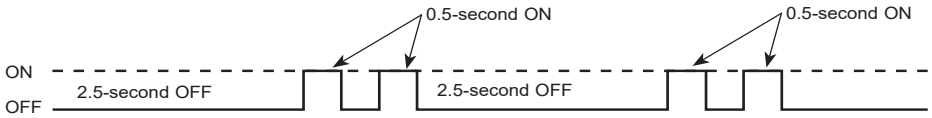

11-3. HOW TO PROCEED "SELF-DIAGNOSIS"

11-3-1. Self-diagnosis <PAR-4xMAA ("x" represents 0 or later)>

① Select "Service" from the Main menu, and press the [✓] button.

Select "Check" from the Service menu, and press the [✓] button.

Select "Diagnosis" from the Check menu, and press the [✓] button.

Select "Self check" with the F1 or F2 button, and press the [✓] button.

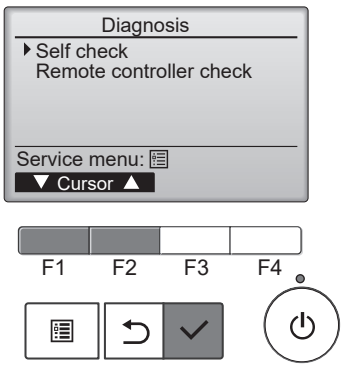

② With the F1 or F2 button, enter the refrigerant address, and press the [✓] button.

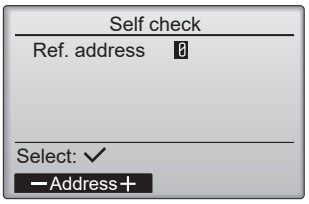

③ Check code, unit number, attribute will appear.
"-" will appear if no error history is available.

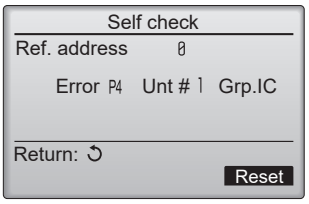

When there is no error history

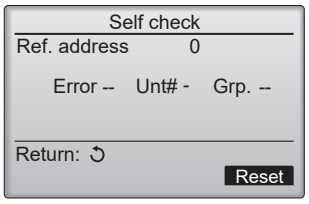

④ <u>Resetting the error history</u>

Press the F4 button (Reset) on the screen that shows the error history.

A confirmation screen will appear asking if you want to delete the error history.

Press the F4 button (OK) to delete the error history.

If deletion fails, "Request rejected" will appear.
"Unit not exist" will appear if no indoor units that are correspond to the entered address are found.

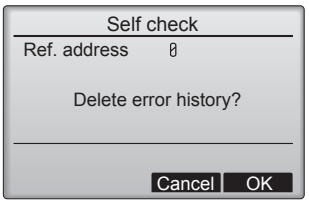

Navigating through the screens

- To go back to the Service menu ..... [ ] button
- To return to the previous screen.....[ ] button

11-3-2. Remote controller check <PAR-4xMAA ("x" represents 0 or later)>

If operations cannot be completed with the remote controller, diagnose the remote controller with this function.

① Select "Service" from the Main menu, and press the [✓] button.

Select "Check" from the Service menu, and press the [✓] button.

Select "Diagnosis" from the Check menu, and press the [✓] button.

Select "Remote controller check" with the F1 or F2 button, and press the [✓] button.

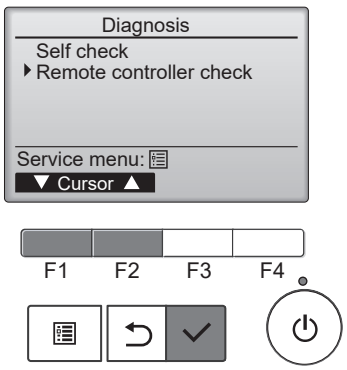

② Select "Remote controller check" from the Diagnosis menu and press the [✓] button to start the remote controller check and see the check results.

To cancel the remote controller check and exit the "Remote controller check" menu screen, press the [ ] or the [ ] button.

The remote controller will not reboot itself.

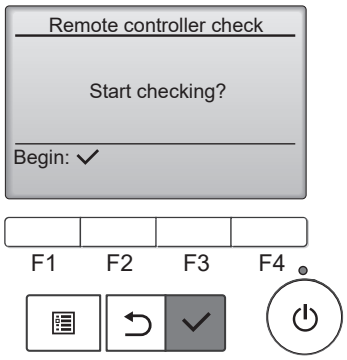

③

OK:	No problems are found with the remote controller. Check other parts for problems.
E3, 6832:	There is noise on the transmission line, or the indoor unit or another remote controller is faulty. Check the transmission line and the other remote controllers.
NG (ALL0, ALL1):	Send-receive circuit fault. The remote controller needs replacing.
ERC:	The number of data errors is the discrepancy between the number of bits in the data transmitted from the remote controller and that of the data that was actually transmitted over the transmission line. If data errors are found, check the transmission line for external noise interference.

Remote controller check results screen

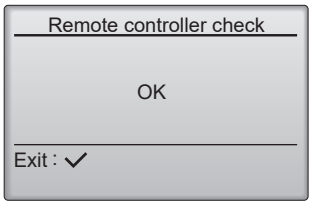

If the [✓] button is pressed after the remote controller check results are displayed, remote controller check will end, and the remote controller will automatically reboot itself.

Check the remote controller display and see if anything is displayed (including lines). Nothing will appear on the remote controller display if the correct voltage (8.5–12 VDC) is not supplied to the remote controller. If this is the case, check the remote controller wiring and indoor units.

11-3-3. Self-diagnosis <PAR-21MAA>

When a problem occurs to the air conditioner, the indoor and outdoor units will stop, and the problem is shown in the remote controller display.
[CHECK] and the refrigerant address are displayed on the temperature display, and the check code and unit number are displayed alternately as shown below.

① (If the outdoor unit is malfunctioning, the unit number will be "00".)
② In the case of group control, for which one remote controller controls multiple refrigerant systems, the refrigerant address and check code of the unit that first experienced trouble (i.e., the unit that transmitted the check code) will be displayed.
③ To clear the check code, press the (ⓘ ON/OFF) button.

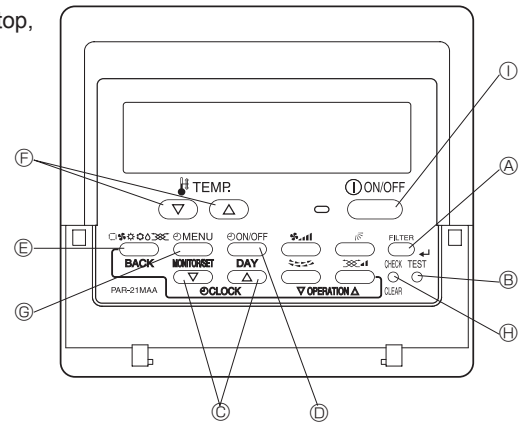

(Alternating Display)

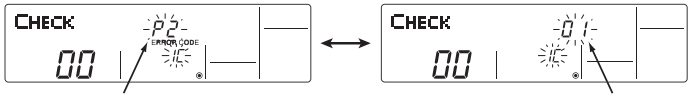

Check code (2 or 4 digits) Address (3 digits) or unit number (2 digits)

[When using remote-/local-controller combined operation, cancel the check code after turning off remote operation.
During central control by a MELANS controller, cancel the check code by pressing the (ⓘ ON/OFF) button.]

11-3-4. Self-Diagnosis During Maintenance or Service <PAR-21MAA>

Since each unit has a function that stores check codes, the latest check code can be recalled even if it is cancelled by the remote controller or power is turned off.

Check the error history for each unit using the remote controller.

① Switch to self-diagnosis mode.
Press the (CHECK) button (Ⓗ in the picture above) twice within 3 seconds.
The display content will change as shown below.

② Set the unit number or refrigerant address you want to diagnose.
Press the [TEMP] buttons ((▽) and (△)) (Ⓕ in the picture above) to select the desired number or address. The number (address) changes between [01] and [50] or [00] and [15].

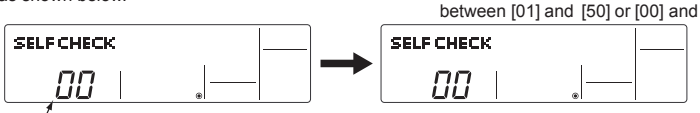

Unit number or refrigerant address to be diagnosed

The refrigerant address will begin to blink approximately 3 seconds after being selected and the self-diagnosis process will begin.

③ Display self-diagnosis results.
<When there is error history>
(For the definition of each check code, refer to the indoor unit's installation manual or service handbook.)

(Alternating Display)

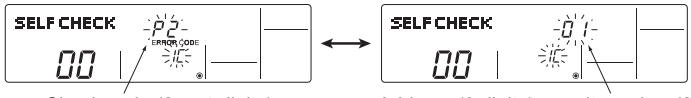

Check code (2 or 4 digits) Address (3 digits) or unit number (2 digits)

<When there is no error history> <When there is no corresponding unit>

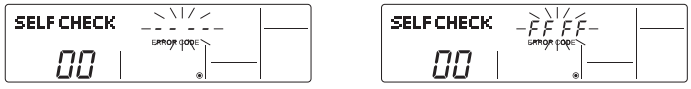

④ Reset the error history.
Display the error history in the diagnosis result display screen (see step ③).

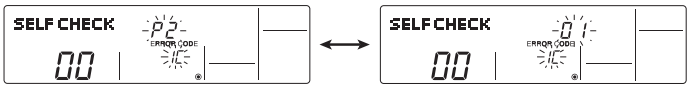

Press the (ON/OFF) button (Ⓓ in the picture in the previous page) twice within 3 seconds. The self-diagnosis address or refrigerant address will blink.

When the error history is reset, the display will look like the one shown below. However, if you fail to reset the error history, the error content will be displayed again.

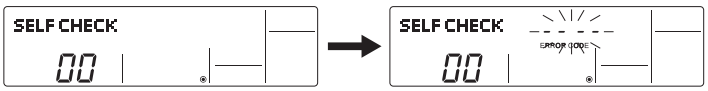

⑤ Cancel self-diagnosis.
Self-diagnosis can be cancelled by the following 2 methods.

Press the (CHECK) button (Ⓗ in the picture in the previous page) twice within 3 seconds. → Self-diagnosis will be cancelled and the screen will return to the previous state in effect before the start of self-diagnosis.

Press the (ON/OFF) button (Ⓓ in the picture in the previous page). → Self-diagnosis will be cancelled and the indoor unit will stop.

11-3-5. Remote controller check <PAR-21MAA>

If the air conditioner cannot be operated from the remote controller, diagnose the remote controller as explained below.

① First, check that the power-on indicator is lit.
If the correct voltage (DC12 V) is not supplied to the remote controller, the indicator will not light.
If this occurs, check the remote controller's wiring and the indoor unit.

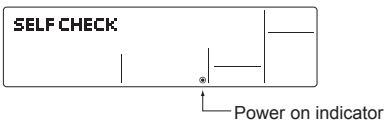

② Switch to the remote controller self-diagnosis mode.

Press the (CHECK) button (Ⓗ in the picture in the previous page) for 5 seconds or more. The display content will change as shown below.

Press the (FILTER) button (Ⓐ in the picture in the previous page) to start self-diagnosis.

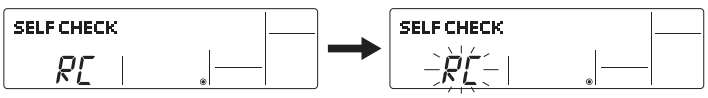

③ Remote controller self-diagnosis result

[When the remote controller is functioning correctly]

Check for other possible causes, as there is no problem with the remote controller.

[When the remote controller malfunctions]
(Error display 1) "NG" blinks. → The remote controller's transmitting-receiving circuit is defective.

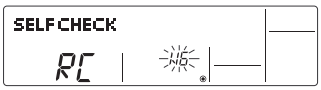

The remote controller must be replaced with a new one.

[Where the remote controller is not defective, but cannot be operated.]
(Error display 2) [E3], [6833] or [6832] blinks. → Transmission is not possible.

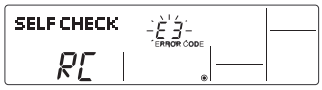

There might be noise or interference on the transmission path, or the indoor unit or other remote controllers are defective. Check the transmission path and other controllers.

(Error display 3) "ERC" and the number of data errors are displayed.
→ Data error has occurred.

The number of data errors is the difference between the number of bits sent from the remote controller and the number actually transmitted through the transmission path. If such a problem is occurring, the transmitted data is affected by noise, etc. Check the transmission path.

☞ When the number of data errors is "02":
Transmission data from remote controller
Transmission data on transmission path

④ To cancel remote controller diagnosis

Press the (CHECK) button (Ⓗ in the picture in the previous page) for 5 seconds or more. Remote controller diagnosis will be cancelled, "PLEASE WAIT" and operation lamp will blink. Afterapproximately 30 seconds, the state in effect before the diagnosis will be restored.

11-3-6. Self-diagnosis <Wireless remote controller>

<In case of trouble during operation>

When a malfunction occurs to air conditioner, both indoor unit and outdoor unit will stop and operation lamp blinks to inform unusual stop.

<Malfunction-diagnosis method at maintenance service>

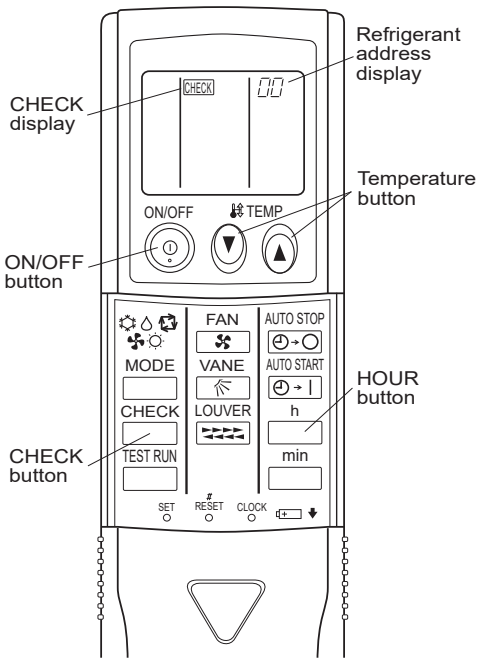

[Procedure]

1. Press the CHECK button twice.
   - "CHECK" lights, and refrigerant address "00" blinks.
   - Check that the remote controller's display has stopped before continuing.

2. Press the temperature ▼ ▲ buttons.
   - Select the refrigerant address of the indoor unit for the self-diagnosis.
     Note: Set refrigerant address using the outdoor unit's DIP switch (SW1).
     (For more information, see the outdoor unit installation manual.)

3. Point the remote controller at the sensor on the indoor unit and press the HOUR button.
   - If an air conditioner error occurs, the indoor unit's sensor emits an intermittent beep sound, the operation light blinks, and the check code is output. (It takes 3 seconds at most for check code to appear.)

4. Point the remote controller at the sensor on the indoor unit and press the ON/OFF button.
   - The check mode is cancelled.

11-3-7. Self-diagnosis <Wireless remote controller PAR-SL101A-E>

<In case of trouble during operation>

When a malfunction occurs to air conditioner, both indoor unit and outdoor unit will stop and operation lamp blinks to inform unusual stop.

<Malfunction-diagnosis method at maintenance service>

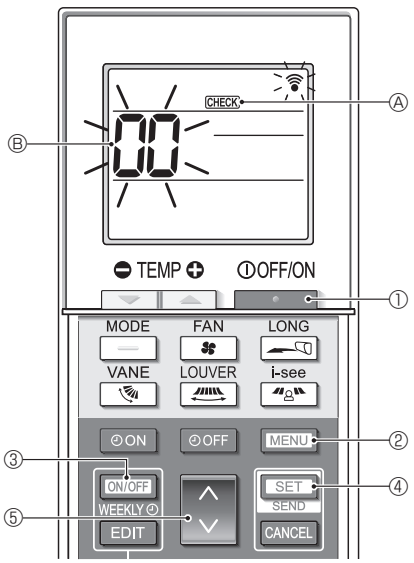

1. Press the [ ] button ① to stop the air conditioner.
   - If the weekly timer is enabled (WEEKLY is on), press the [ON/OFF WEEKLY] button ③ to disable it (WEEKLY is off).
2. Press the [MENU] button ② for 5 seconds.
   - CHECK Ⓐ comes on and the unit enters the self-check mode.
3. Press the [^ v] button ⑤ to select the refrigerant address (M-NET address) Ⓑ of the indoor unit for which you want to perform the self-check.
4. Press the [SET] button ④.
   - If an error is detected, the check code is indicated by the number of beeps from the indoor unit and the number of blinks of the OPERATION INDICATOR lamp.
5. Press the [ ] button ①.
   - CHECK Ⓐ and the refrigerant address (M-NET address) Ⓑ go off and the self-check is completed.

• Refer to the following tables for details on the check codes.

[Output pattern A]

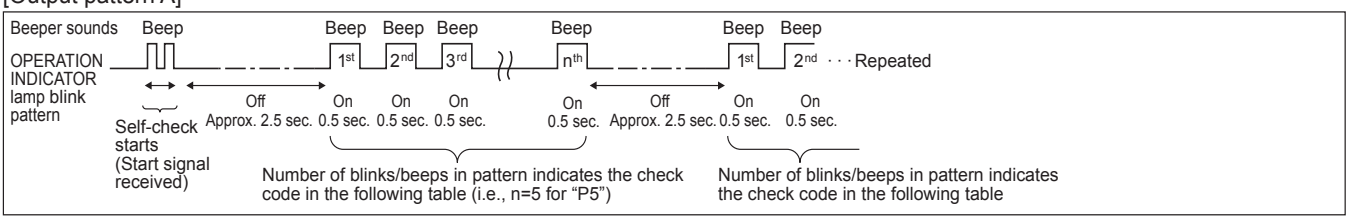

[Output pattern B]

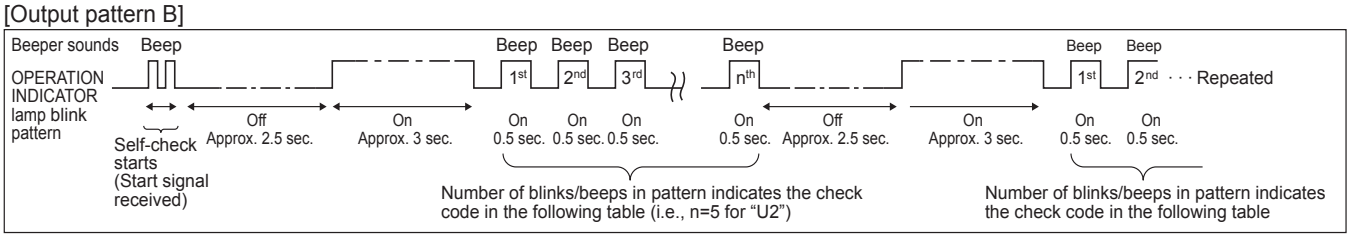

[Output pattern A] Errors detected by indoor unit

Wireless remote controller Beeper sounds/OPERATION INDICATOR lamp blinks (Number of times)	Wired remote controller Check code	Symptom	Remark
1	P1	Intake sensor error	As for indoor unit, refer to indoor unit's service manual.
2	P2	Pipe (TH2) sensor error	
	P9	Pipe (TH5) sensor error	
3	E6,E7	Indoor/outdoor unit communication error	
4	P4	Drain sensor error/Float switch connector (CN4F) open	
5	P5	Drain pump error	
	PA	Forced compressor stop (due to water leakage abnormality)	
6	P6	Freezing/Overheating protection operation	
7	EE	Communication error between indoor and outdoor units	
9	E4, E5	Remote controller signal receiving error	
12	Fb (FB)*	Indoor unit control system error (memory error, etc.)	
14	PL	Abnormality of refrigerant circuit	
–	E0, E3	Remote controller transmission error	
–	E1, E2	Remote controller control board error	

[Output pattern B] Errors detected by unit other than indoor unit (outdoor unit, etc.)

Wireless remote controller Beeper sounds/OPERATION INDICATOR lamp blinks (Number of times)	Wired remote controller Check code	Symptom
1	E9	Indoor/outdoor unit communication error (Transmitting error) (Outdoor unit)
2	UP	Compressor overcurrent interruption
3	U3,U4	Open/short of outdoor unit thermistors
14	Others	Other errors (Refer to the technical manual for the outdoor unit.)

Notes: 1. If the beeper does not sound again after the initial 2 beeps to confirm the self-check start signal was received and the OPERATION INDICATOR lamp does not come on, there are no error records.
2. If the beeper sounds 3 times continuously "beep, beep, beep (0.4 + 0.4 + 0.4 sec.)" after the initial 2 beeps to confirm the self-check start signal was received, the specified refrigerant address is incorrect.

*The check code in the parenthesis indicates PAR-30MAA model.

11-4. TROUBLE CRITERION OF MAIN PARTS

<table>
<tr><th>Part name</th><th>Check method and criterion</th><th>Figure</th></tr>
<tr><td>Defrost thermistor (RT61)

Fin temperature thermistor (RT64)

Ambient temperature thermistor (RT65)

Outdoor heat exchanger temperature thermistor (RT68)</td><td>Measure the resistance with a tester.

Refer to “Inverter P.C. board” in "11-6. TEST POINT DIAGRAM AND VOLTAGE”, for the chart of thermistor.</td><td></td></tr>
<tr><td>Discharge temperature thermistor (RT62)</td><td>Measure the resistance with a tester. Before measurement, hold the thermistor with your hands to warm it up.

Refer to “Inverter P.C. board” in "11-6. TEST POINT DIAGRAM AND VOLTAGE”, for the chart of thermistor.</td><td></td></tr>
<tr><td>Compressor</td><td>Measure the resistance between terminals with a tester.
(Temperature: 14 to 104 °F (-10 to 40 °C))
<table>
<tr><th></th><th colspan="2">Normal (Ω)</th></tr>
<tr><th></th><th>AA09/12/15/18</th><th>AA24/30/36</th></tr>
<tr><td>U-V
U-W
V-W</td><td>1.37 - 1.69</td><td>0.64 - 0.78</td></tr>
</table></td><td> 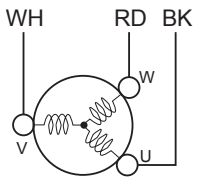
</td></tr>
<tr><td>Outdoor fan motor</td><td>Measure the resistance between lead wires with a tester.
(Temperature: 14 ~ 104 °F (-10 ~ 40 °C))
<table>
<tr><th rowspan="2">Color of lead wire</th><th>Normal (Ω)</th></tr>
<tr><th>AA09/12/15/18
AA24/30/36</th></tr>
<tr><td>RD – BK
BK – WH
WH – RD</td><td>8 to 10</td></tr>
</table></td><td> 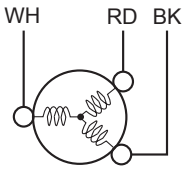
</td></tr>
<tr><td>R. V. coil (21S4)</td><td>Measure the resistance with a tester.
(Temperature: 14 to 104 °F (-10 to 40°C))
<table>
<tr><th>Normal (kΩ)</th></tr>
<tr><td>0.97 to 1.38</td></tr>
</table></td><td></td></tr>
<tr><td>Expansion valve coil (LEV)</td><td>Measure the resistance with a tester.
(Temperature: 14 ~ 104 °F (-10 ~ 40 °C))
<table>
<tr><th>Color of lead wire</th><th>Normal (Ω)</th></tr>
<tr><td>RD – OG</td><td rowspan="4">37 to 54</td></tr>
<tr><td>RD – WH</td></tr>
<tr><td>RD – BU</td></tr>
<tr><td>RD – YE</td></tr>
</table></td><td> 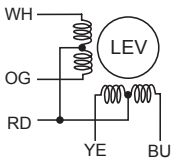
</td></tr>
<tr><td>Defrost heater</td><td>Measure the resistance using a tester.
[Temperature: 14 - 104°F (-10 - 40°C)]
<table>
<tr><th>Normal (kΩ)</th></tr>
<tr><td>376 - 461</td></tr>
</table></td><td></td></tr>
</table>

11-5. TROUBLESHOOTING FLOW

Ⓐ How to check inverter/compressor

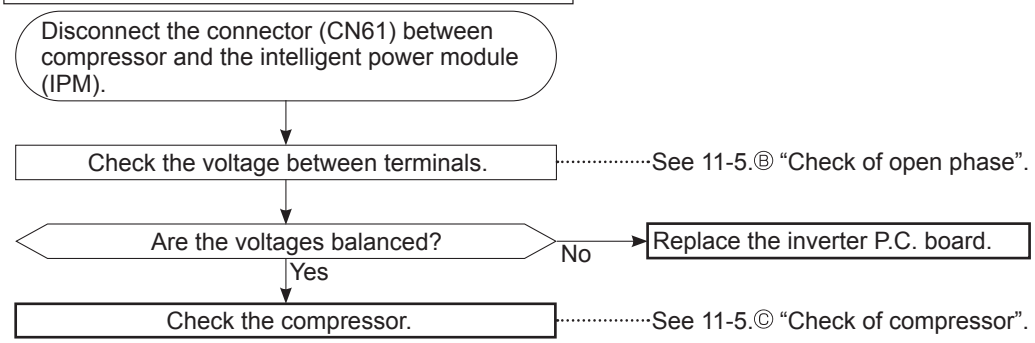

Ⓑ Check of open phase

- With the connector between the compressor and the intelligent power module disconnected, activate the inverter and check if the inverter is normal by measuring the voltage balance between the terminals.

Output voltage is 50 - 130 V. (The voltage may differ according to the tester.)

<Operation method (Test run operation)>
1. Press the TEST (RUN) button twice.
2. Press the MODE button and switch to the COOL (or HEAT) mode.
3. Compressor starts at rated frequency in COOL mode or 58 Hz in HEAT mode.
4. Indoor fan operates at High speed.
5. To cancel test run operation, press the ON/OFF button on remote controller.

<Measurement point>
at 3 points
BK (U) - WH (V)
BK (U) - RD (W)
WH(V) - RD (W)

Measure AC voltage between the lead wires at 3 points.

NOTE: 1. Output voltage varies according to power supply voltage.
2. Measure the voltage by analog type tester.
3. During this check, LED of the inverter P.C. board blinks 9 times.
(Refer to "11-6. TEST POINT DIAGRAM AND VOLTAGE".)

Ⓒ Check of compressor

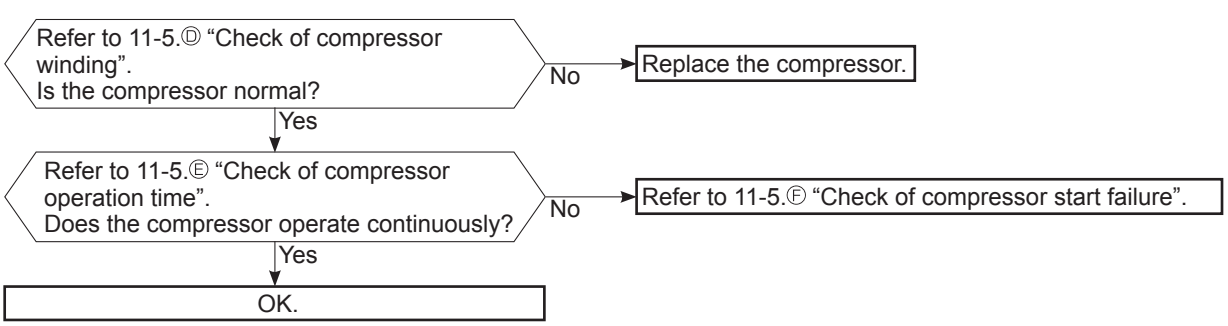

Ⓓ Check of compressor winding

● Disconnect the connector between the compressor and intelligent power module, and measure the resistance between the compressor terminals.

<Measurement point>

Measure the resistance between the lead wires at 3 points.

BK - WH

BK - RD

WH - RD

<Judgement>

Refer to "11-4. TROUBLE CRITERION OF MAIN PARTS".

0[Ω] ····· Abnormal [short]

Infinite [Ω]····· Abnormal [open]

NOTE: Be sure to zero the ohmmeter before measurement.

Ⓔ Check of compressor operation time

●Connect the compressor and activate the inverter. Then measure the time until the inverter stops due to over current.

<Operation method>

Start heating or cooling operation by pressing the TEST button twice on the remote controller. (Test run mode)

(TEST RUN OPERATION: Refer to 11-5 Ⓑ.)

<Measurement>

Measure the time from the start of compressor to the stop of compressor due to overcurrent.

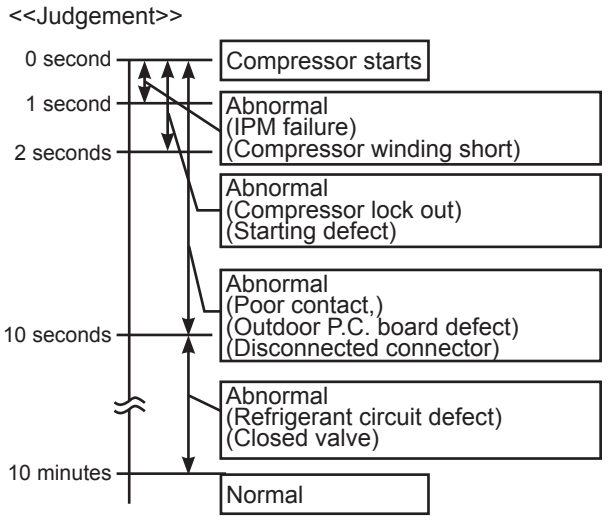

Ⓕ Check of compressor start failure

Confirm that 1~4 is normal.
- Electrical circuit check

1. Contact of the compressor connector
2. Output voltage of inverter P.C. board and balance of them (See 11-5.Ⓑ)
3. Direct current voltage between DB61(+) and (-) on the inverter P.C. board
4. Voltage between outdoor terminal block S1-S2

↓

Does the compressor run for 10 seconds or more after it starts?

Yes → Check the refrigerant circuit. Check the stop valve.

No ↓

After the compressor is heated with a drier, does the compressor start?*1

No → Replace the compressor.

Yes ↓

Compressor start failure. Activate pre-heat control. (Refer to "10-2. PRE-HEAT CONTROL SETTING")

WARNING:
When opening or closing the valve below freezing temperatures, refrigerant may spurt out from the gap between the valve stem and the valve body, resulting in injuries.

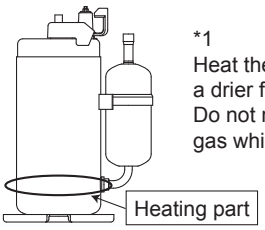

*1
Heat the compressor with a drier for about 20 minutes. Do not recover refrigerant gas while heating.

Ⓖ Check of outdoor thermistors

Disconnect the connector of thermistor in the outdoor P.C. board (see below table), and measure the resistance of thermistor.

↓

Is the resistance of thermistor normal?
(Refer to "11-6.TEST POINT DIAGRAM AND VOLTAGE".)

→ No → Replace the thermistor except RT64. When RT64 is abnormal, replace the inverter P.C. board.

↓ Yes

Reconnect the connector of thermistor.
Turn ON the power supply and press EMERGENCY OPERATION switch.

↓

Does the unit operate for 10 minutes or more without showing thermistor abnormality?

→ No → Replace the inverter P.C. board.

↓ Yes

OK.
(Cause is poor contact.)

Thermistor	Symbol	Connector, Pin No.	Board
Defrost	RT61	Between CN671 pin1 and pin2	Inverter P.C. board
Discharge temperature	RT62	Between CN671 pin3 and pin4	
Fin temperature	RT64	Between CN673 pin1 and pin2	
Ambient temperature	RT65	Between CN672 pin1 and pin2	
Outdoor heat exchanger temperature	RT68	Between CN671 pin5 and pin6	

Ⓗ Check of R.V. coil

First of all, measure the resistance of R.V. coil to check if the coil is defective. Refer to "11-4. TROUBLE CRITERION OF MAIN PARTS".
In case CN602 is disconnected or R.V. coil is open, voltage is generated between the terminal pins of the connector although no signal is being transmitted to R.V. coil. Check if CN602 is connected.

Unit operates in COOL mode even if it is set to HEAT mode.

Disconnect connector between the compressor and the intelligent power module.
Turn ON the power supply and press the TEST button twice (HEAT mode).

→ Is there 208/230 VAC between CN602 ① and ② on the inverter P.C. board 3 minutes after the power supply is turned ON?

→ No → Replace the inverter P.C. board.

↓ Yes

Replace the 4-way valve.

Unit operates in HEAT mode even if it is set to COOL mode.

Disconnect connector between the compressor and the intelligent power module.
Turn ON the power supply and press the TEST button once (COOL mode).

→ Is there 208/230 VAC between CN602 ① and ② on the inverter P.C. board 3 minutes after the power supply is turned ON?

→ Yes → Replace the inverter P.C. board.

↓ No

Replace the 4-way valve.

Ⓘ Check of outdoor fan motor

Check the connection between the connector CN931 and CN932.

Is the resistance between each terminal of outdoor fan motor normal? (Refer to"11-4. TROUBLE CRITERION OF MAIN PARTS".)

- No → Replace the outdoor fan motor.
- Yes → Disconnect CN932 from the inverter P.C. board, and turn on the power supply.

Rotate the outdoor fan motor manually and measure the voltage of CN931.
Between 1(+) and 5(-)
Between 2(+) and 5(-)
Between 3(+) and 5(-)

Does the voltage between each terminal become 5 and 0 VDC repeatedly?

- No → (Fixed to either 5 or 0 VDC) → Replace the outdoor fan motor.
- Yes → Does the outdoor fan motor rotate smoothly?

Does the outdoor fan motor rotate smoothly?

- No → Replace the outdoor fan motor.
- Yes → Replace the inverter P.C. board.

Ⓙ Check of power supply

Disconnect the connector between the compressor and the power module (IC700).
Turn ON power supply and press the emergency operation switch.

Does the left lamp of the OPERATION INDICATOR lamp on the indoor unit light up?

- No → Is there voltage 208/230 V AC between the indoor terminal block S1 and S2?
  - Yes → Rectify indoor/outdoor connecting wire.
  - No → Replace the indoor electronic control P.C. board.
- Yes → Is there bus-bar voltage DC between DB61 (+) and DB61 (-) 294 - 370 V DC between IC700 (P) and (N) on the inverter P.C. board? (Refer to 11-6.1.)
  - No → Check the electric parts in main circuit.
  - Yes → Does LED on the inverter P.C. board light up or blink? (Refer to 11-6.1.)
    - No → Replace the inverter P.C. board.
    - Yes → If lights up, OK. If blinks, refer to 11-3.

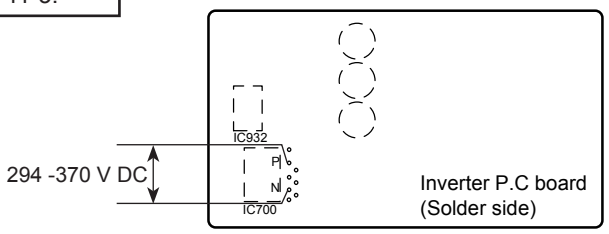

Ⓚ Check of LEV

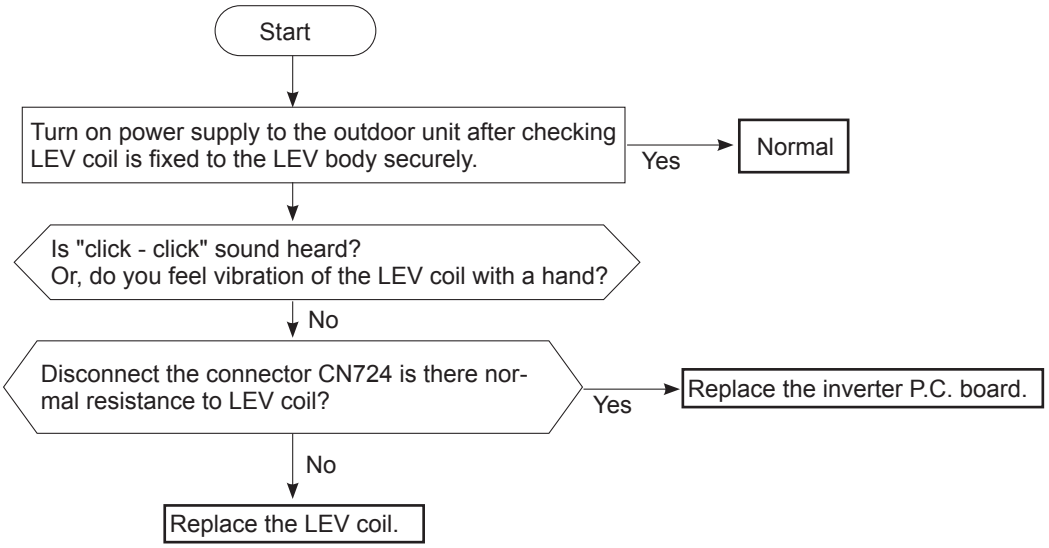

Ⓛ Check of inverter P.C. board

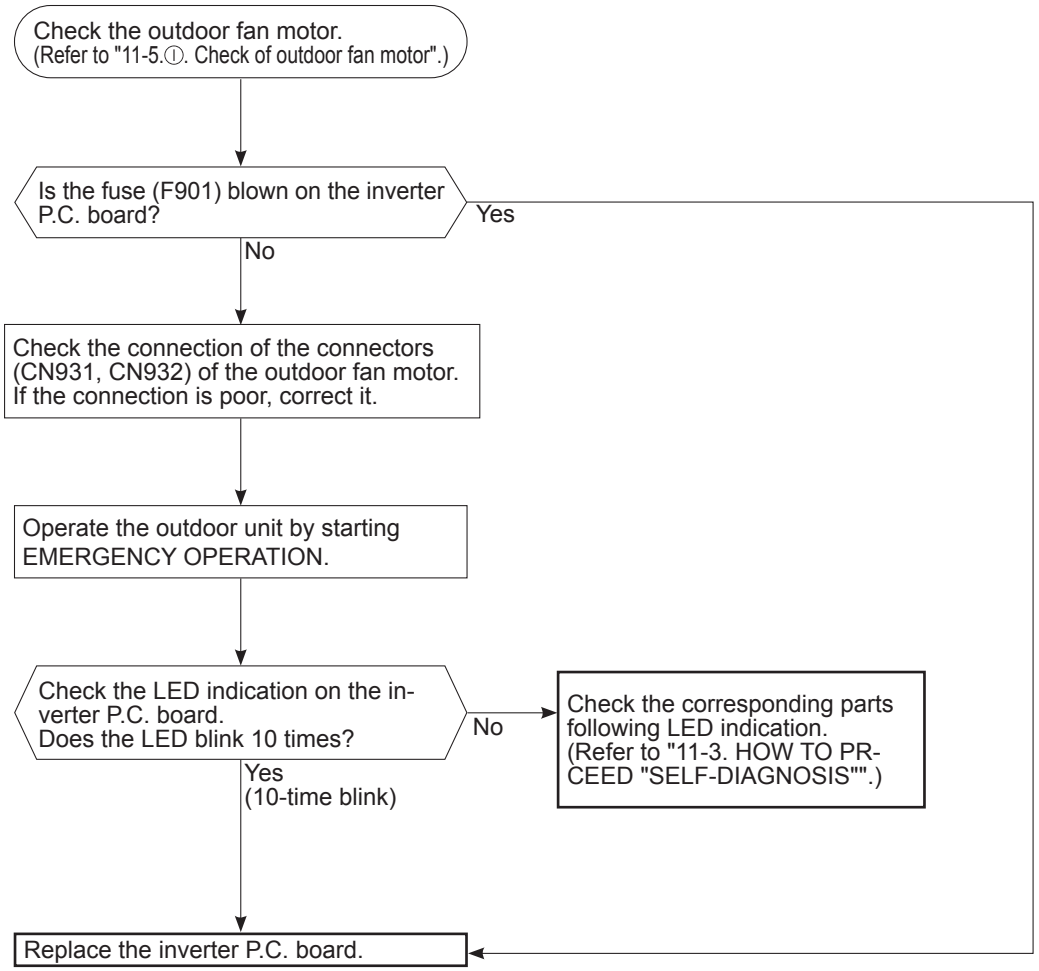

Ⓜ How to check miswiring and serial signal error

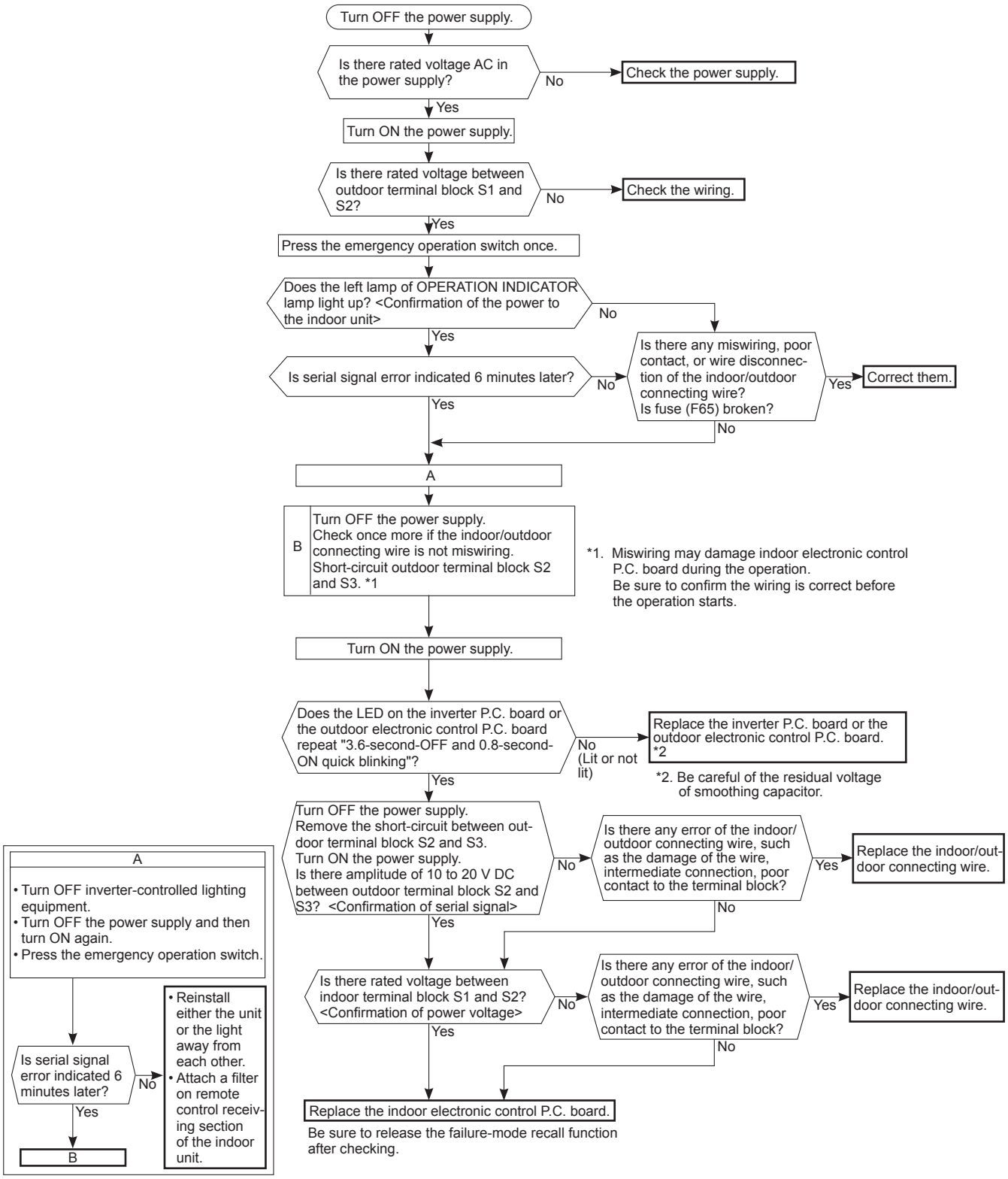

Ⓝ Check the defrost heater

SUZ-AA09/12/15/18NLHZ-U1

Check the following points before checking electric continuity.
1. Does the resistance of ambient temperature thermistor have the characteristics? Refer to 11-6.1.
2. Is the resistance of defrost heater normal? Refer to 11-4.
3. Does the heater protector remain conducted (not open)?
4. Are both ambient temperature thermistor and circuit of defrost heater securely connected to connectors?

In HEAT mode, for more than 5 minutes, let the ambient temperature thermistor continue to read 32°F (0°C) or below, and let the defrost thermistor continue to read 30°F (-1°C) or below.

NOTE: In case both thermistors are more than the above temperature, cool them with cold water etc...

Is there 208/230 VAC between CN601 ① and ② on the inverter P.C. board? Refer to 11-6.1.

- Yes → Not the problem of the inverter P.C. board.
- No → Replace the inverter P.C. board.

Ⓞ Check of outdoor refrigerant circuit

Has the operation stopped during pump down?

- Yes → The operation has stopped to prevent the diesel explosion caused by air trapped in the refrigerant circuit. Close the stop valve, and disconnect the power plug or turn the breaker OFF. *

  WARNING:
  When opening or closing the valve below freezing temperatures, refrigerant may spurt out from the gap between the valve stem and the valve body, resulting in injuries.
- No → Was the operation started with the stop valve closed, and was it opened during operation?
  - Yes → The unit occasionally stops when the stop valve is opened or closed during operation. Open the stop valve and start the cooling operation again.
  - No → The refrigerant gas amount may be 60% or less than the normal amount. Identify where the gas is leaking from, and fix the leak.

*** CAUTION : Do not start the operation again to prevent hazards.**

Ⓟ Electromagnetic noise enters into TV sets or radios

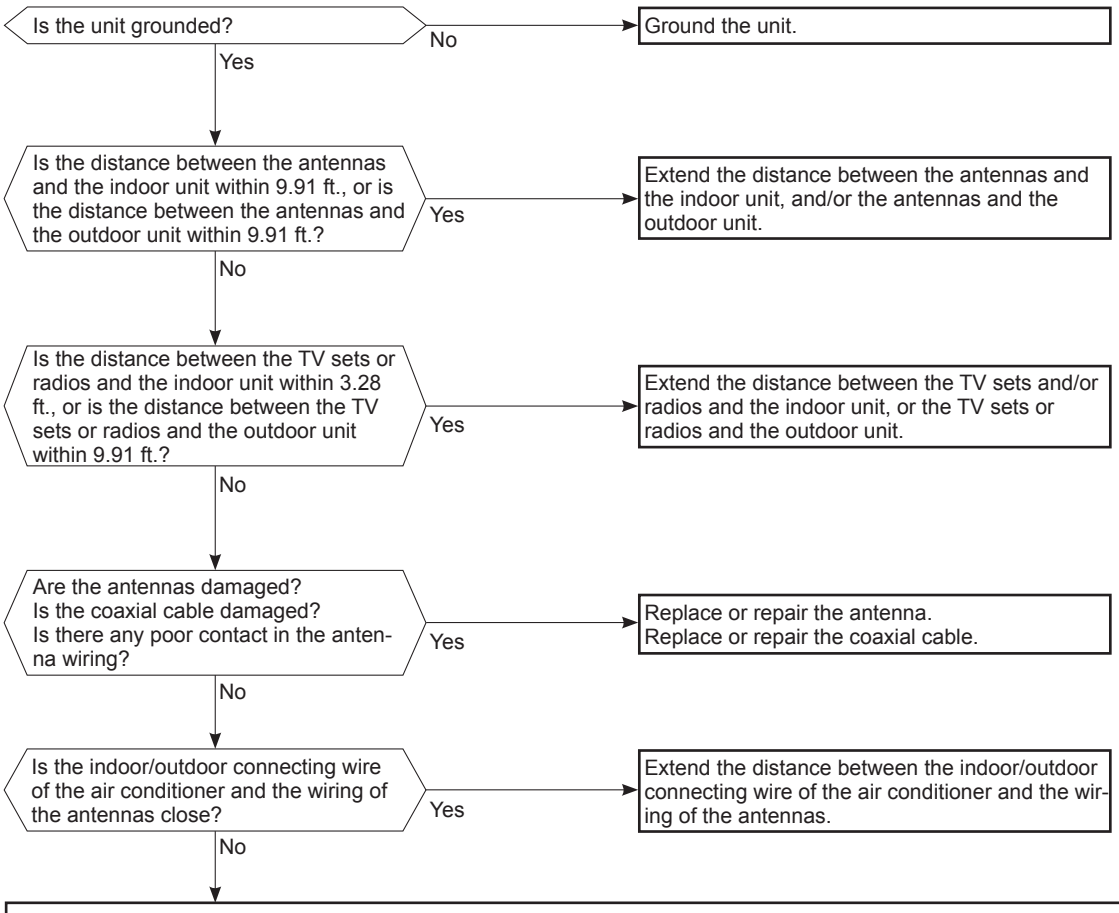

Even if all of the above conditions are fulfilled, the electromagnetic noise may enter, depending on the electric field strength or the installation condition (combination of specific conditions such as antennas or wiring).
Check the followings before asking for service.

1. Devices affected by the electromagnetic noise
   TV sets, radios (FM/AM broadcast, shortwave)
2. Channel, frequency, broadcast station affected by the electromagnetic noise
3. Channel, frequency, broadcast station unaffected by the electromagnetic noise
4. Layout of:
   indoor/outdoor unit of the air conditioner, indoor/outdoor wiring, grounding wire, antennas, wiring from antennas, receiver
5. Electric field intensity of the broadcast station affected by the electromagnetic noise
6. Presence or absence of amplifier such as booster
7. Operation condition of air conditioner when the electromagnetic noise enters in
   1) Turn OFF the power supply once, and then turn ON the power supply. In this situation, check for the electromagnetic noise.
   2) Within 3 minutes after turning ON the power supply, press OPERATE/STOP (ON/OFF) button on the remote controller for power ON, and check for the electromagnetic noise.
   3) After a short time (3 minutes later after turning ON), the outdoor unit starts running. During operation, check for the electromagnetic noise.
   4) Press OPERATE/STOP (ON/OFF) button on the remote controller for power OFF, when the outdoor unit stops but the indoor/outdoor communication still runs on. In this situation, check for the electromagnetic noise.

Ⓠ Check of compressor protector

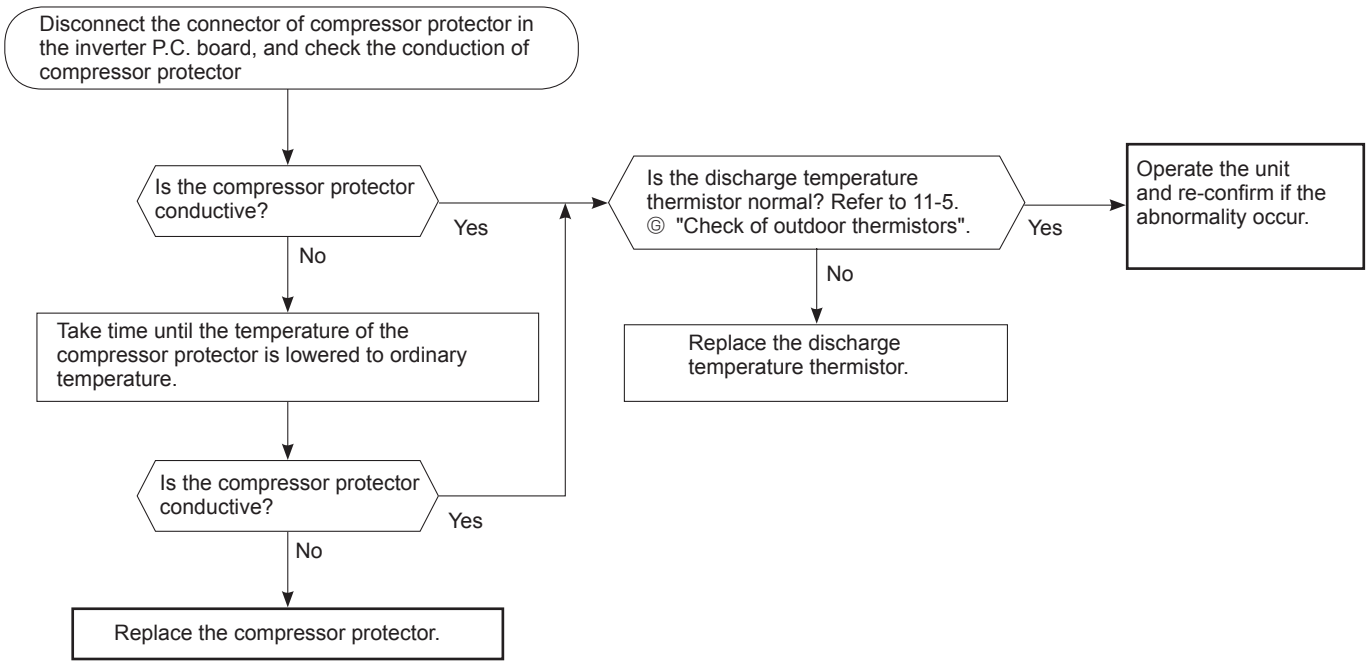

11-6. TEST POINT DIAGRAM AND VOLTAGE

1. Inverter P.C. board

SUZ-AA18NL-U1 **SUZ-AA24NL-U1** **SUZ-AA30NL-U1** **SUZ-AA36NL-U1**
SUZ-AA09NLHZ-U1 **SUZ-AA12NLHZ-U1** **SUZ-AA15NLHZ-U1** **SUZ-AA18NLHZ-U1**

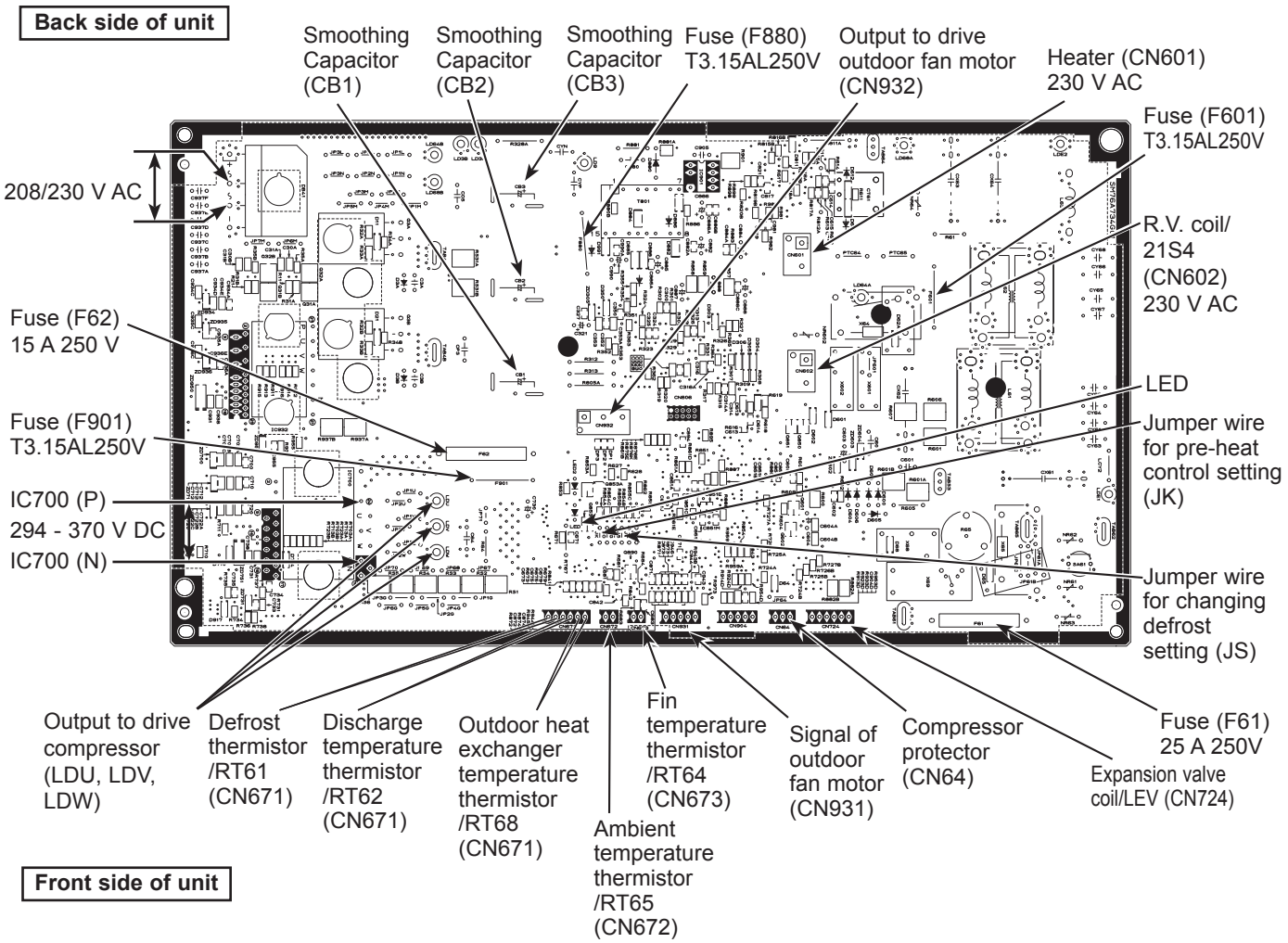

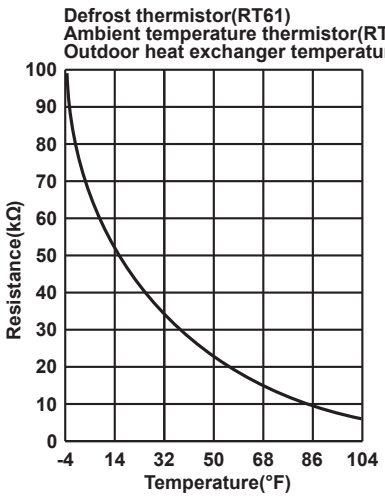

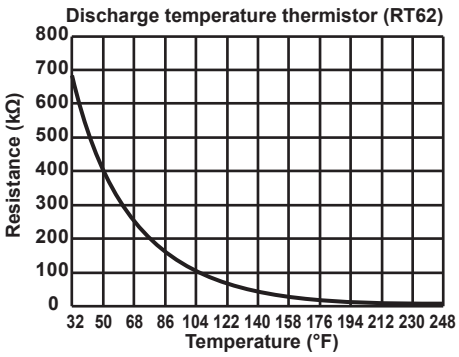

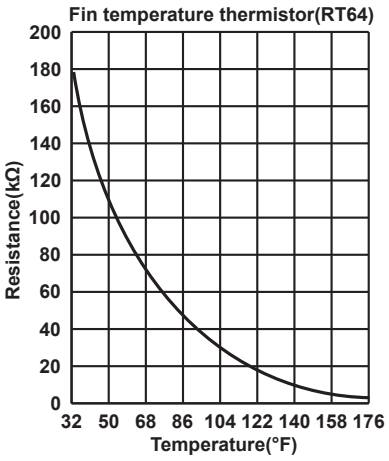

2. Fuse P.C. board

SUZ-AA18NL-U1 **SUZ-AA24NL-U1** **SUZ-AA30NL-U1** **SUZ-AA36NL-U1**
SUZ-AA09NLHZ-U1 **SUZ-AA12NLHZ-U1** **SUZ-AA15NLHZ-U1** **SUZ-AA18NLHZ-U1**

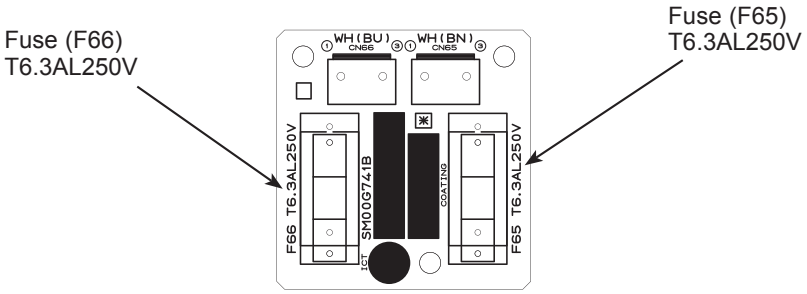

12 FUNCTION SETTING

12-1. UNIT FUNCTION SETTING BY THE REMOTE CONTROLLER

Each function can be set according to necessity using the remote controller. The setting of function for each unit can only be done by the remote controller. Select function available from the table 1.

<Table 1> Function selections

(1) Functions available when setting the unit number to 00 (Select 00 referring to ④ setting the indoor unit number.)

Function	Settings	Mode No. Wired remote controller (RF thermostat)	Setting No.	● : Initial setting (when sent from the factory)	Check	Remarks
Power failure automatic recovery	Not available	01 (101)	1			The setting is applied to all the units in the same refrigerant system.
	Available (Approx. 4-minute wait-period after power is restored.)		2	●		
Indoor temperature detecting	Indoor unit's internal sensor	02 (—)	1	●		
			2			
	Data from main remote controller *1		3			
LOSSNAY connectivity	Not supported	03 (103)	1	●		
	Supported (indoor unit dose not intake outdoor air through LOSSNAY)		2			
	Supported (indoor unit intakes outdoor air through LOSSNAY)		3			
Power supply voltage	230V	04 (104)	1	●		
	208V		2			
Frost prevention temperature	2℃ [36°F] (Normal)	15 (115)	1	●		
	3℃ [37°F]		2			

*1 Can be set only when a wired remote controller is used.
When using 2 remote controllers (2-remote controller operation), the remote controller with built-in sensor must be set as a main remote controller.

(2) Functions are available when setting the unit number to 01.

Function	Settings	Mode No. Wired remote controller (RF thermostat)	Setting No.	● : Initial setting (Factory setting) Ceiling concealed SEZ-AE·NL	Ceiling cassette SLZ-AF·NL	Ceiling suspended PEAD-AA·NL	Multi position SVZ-AP·NL	Check
Filter sign	100h	07 (107)	1					
	2500h		2		●			
	No filter sign indicator		3	●		●	●	
External static pressure	5/15/35/50Pa (0.02/0.06/0.14/0.20in.WG)	08 (108)		Refer to the table below	—	Refer to the table below	Refer to the table below	
		10 (110)		Refer to the table below	—	Refer to the table below	Refer to the table below	
Heater control *2	No heater present	11 (111)	1	—	—	●	●	
	Heater present		2	—	—			
	SEZ, SLZ :Set temp -4.5°F ON PEAD, SVZ :Heater not operation in Defrost/Error	23 (123)	1	●	●	●	●	
	SEZ, SLZ :Set temp -1.8°F ON PEAD, SVZ :Heater not operation in Defrost/Error*4		2					
Set temperature in heating mode *3	Available	24 (124)	1	●	●	●	●	
	Not available		2					
Fan speed during the heating thermo OFF	Extra low	25 (125)	1	●	●	●	●	
	Stop		2					
	Set fan speed		3					
Fan speed during the cooling thermo OFF	Set fan speed	27 (127)	1	●	●	●	●	
	Stop		2					
Detection of abnormality of the pipe temperature (P8)	Available	28 (128)	1	●	●			
	Not available		2			●	●	

*2 For the detail of Heater control, refer to the service manual.
*3 4 degC (7.2 degF) up
*4 Depend on the error, heater may not operate please refer to SVZ service manual.

External static pressure setting for SEZ.

External static pressure	Setting No. Mode No. 08	Mode No. 10	● : Initial setting (Factory setting)	Check
5Pa (0.02in.WG)	1	2		
15Pa (0.06in.WG)	1	1	●	
35Pa (0.14in.WG)	2	1		
50Pa (0.20in.WG)	3	1		

External static pressure setting for PEAD.

External static pressure	Setting No. Mode No. 08	Mode No. 10	● : Initial setting (Factory setting)	Check
35Pa (0.14in.WG)	2	1		
50Pa (0.20in.WG)	3	1	●	
70Pa (0.28in.WG)	1	2		
100Pa (0.40in.WG)	2	2		
150Pa (0.60in.WG)	3	2		

External static pressure setting for SVZ (Vertical, Horizontal left, Horizontal right position*).

External static pressure	Setting No. Mode No. 08	Mode No. 10	● : Initial setting (Factory setting)	Check
75Pa (0.3in.WG)	1	1		
125Pa (0.5in.WG)	2	1	●	
200Pa (0.8in.WG)	3	1		

* Regarding to down flow setting, please refer to down flow kit installation manual.

12-1-1. Selecting functions using the wired remote controller <PAR-41MAA>

<Service menu>

Maintenance password is required

① Select "Service" from the Main menu, and press the [✓] button.

*At the main display, the menu button and select "Service" to make the maintenance setting.

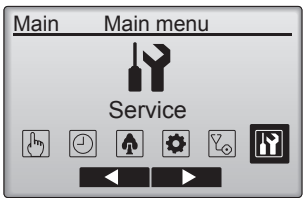

② When the Service menu is selected, a window will appear asking for the password.

To enter the current maintenance password (4 numerical digits), move the cursor to the digit you want to change with the F1 or F2 button.

▼

Set each number (0 through 9) with the F3 or F4 button.

▼

Then, press the [✓] button.

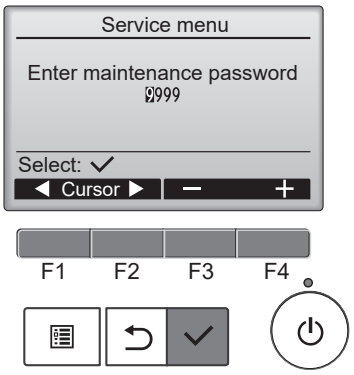

Note: The initial maintenance password is "9999". Change the default password as necessary to prevent unauthorized access. Have the password available for those who need it.
: If you forget your maintenance password, you can initialize the password to the default password "9999" by pressing and holding the F1 button for 10 seconds on the maintenance password setting screen.

③ If the password matches, the Service menu will appear.

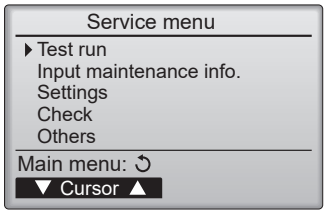

Note: Air conditioning units may need to be stopped to make only at "settings". There may be some settings that cannot be made when the system is centrally controlled.

▼

A screen will appear that indicates the setting has been saved.

Navigating through the screens

- To go back to the Service menu ..... [ ] button
- To return to the previous screen..... [ ] button

12-2. FUNCTION SETTING

12-2-1. PAR-41MAA

1. Select ˝Service˝ from the Main menu, and press the [✓] button.

Select ˝Function setting˝, and press the [✓] button.

Select ˝Setting˝ from the Service menu, and press the [✓] button.

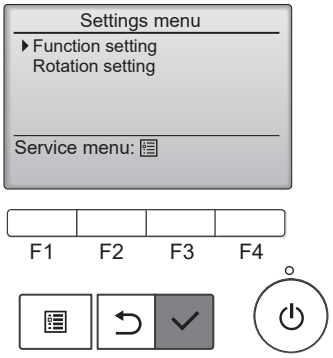

<The display format and the setting method vary with indoor units.>
Pattern 1

2. Set the indoor unit refrigerant addresses and unit numbers with the F1 through F4 buttons, and then press the [✓] button to confirm the current setting.

3. When data collection from the indoor units is completed, the current settings appears highlighted. Non-highlighted items indicate that no function settings are made. Screen appearance varies depending on the "Unit No." setting.

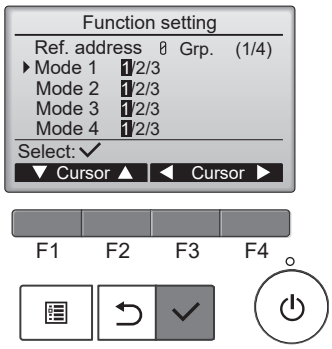

4. Use the F1 or F2 button to move the cursor to select the mode number, and change the setting number with the F3 or F4 button.

5. When the settings are completed, press the [✓] button to send the setting data from the remote controller to the indoor units.

6. When the transmission is successfully completed, the screen will return to the Function setting screen.

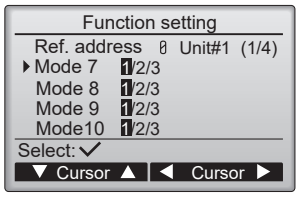

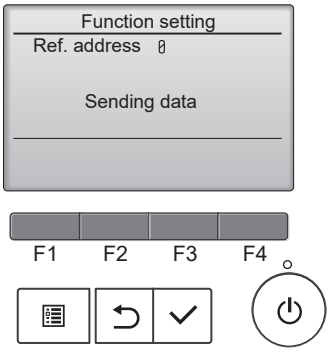

Pattern 2

4. Toggle through the pages with the F3 or F4 button.

5. Select the mode number with the F1 or F2 button, and then press the [✓] button.

6. Select the setting number with the F1 or F2 button.
   Setting range for modes 1 through 28: 1 through 3
   Setting range for modes 31 through 66: 1 through 15

7. When the settings are completed, press the [✓] button to send the setting data from the remote controller to the indoor units.

8. When the transmission is successfully completed, the screen will return to the Function setting screen.

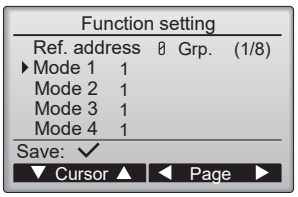

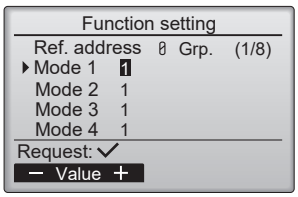

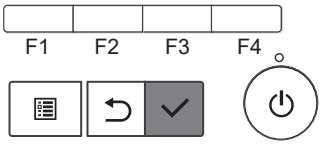

Note:
- **Refer to the indoor unit Installation Manual for the detailed information about initial settings, mode numbers, and setting numbers for the indoor units.**
- **Be sure to write down the settings for all functions if any of the initial settings has been changed after the completion of installation work.**

13 DISASSEMBLY INSTRUCTIONS

<Detaching method of the terminal with locking mechanism>

The terminal which has the locking mechanism can be detached as shown below.
There are 2 types of the terminal with locking mechanism.
The terminal without locking mechanism can be detached by pulling it out.
Check the shape of the terminal before detaching.

(1) Slide the sleeve and check if there is a locking lever or not.

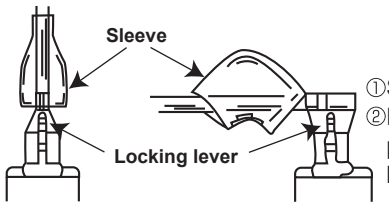

①Slide the sleeve.
②Pull the terminal while pushing the locking lever.

(2) The terminal with the connector shown below has the locking mechanism.

①Hold the sleeve, and pull out the terminal slowly.

13-1. SUZ-AA09NLHZ SUZ-AA12NLHZ SUZ-AA15NLHZ SUZ-AA18NLHZ SUZ-AA18NL

NOTE: Turn OFF the power supply before disassembly.

——→: Indicates the visible parts in the photos/figures.
- - - →: Indicates the invisible parts in the photos/figures.

OPERATING PROCEDURE	PHOTOS/FIGURES
1. Removing the cabinet (1) Remove the screws of the service panel. (2) Remove the screws of the top panel. (3) Remove the screw of the valve cover. (4) Remove the service panel. (5) Remove the top panel. (6) Remove the valve cover. (7) Remove the screws fixing the conduit cover. (Photo 3) (8) Remove the conduit cover. (9) Remove the screw fixing the conduit plate. (Photo 4) (10) Remove the conduit plate. (11) Disconnect the power supply and indoor/outdoor connecting wire. (12) Remove the screws of the cabinet. (13) Remove the cabinet. (14) Remove the screws of the back panel. (15) Remove the back panel. **Photo 2** 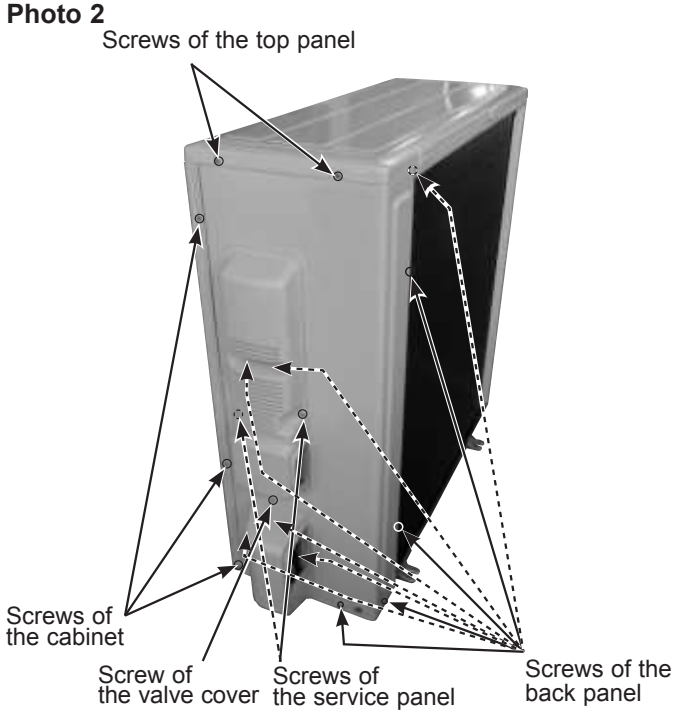 	**Photo 1** 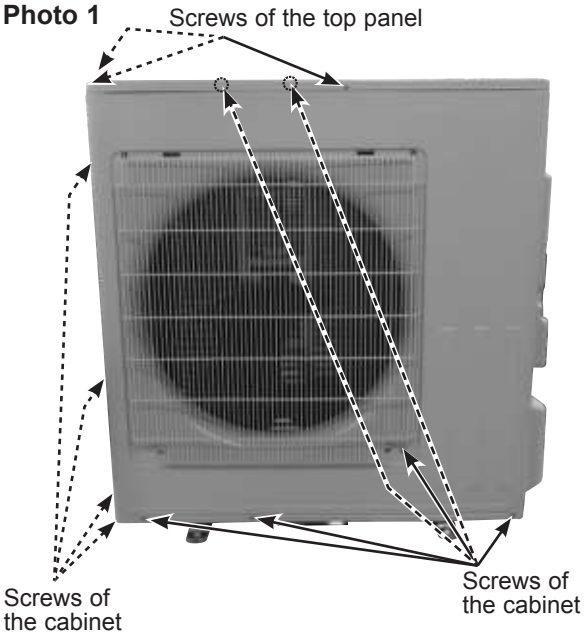

OPERATING PROCEDURE	PHOTOS/FIGURES

2. Removing the inverter assembly, inverter P.C. board and fuse P.C. board

2-1. Removing the inverter assembly and inverter P.C. board

(1) Remove the top panel, cabinet and service panel. (Refer to section 1.)

(2) Disconnect the lead wire to the reactor and the following connectors:

<Inverter P.C. board>

CN602 (R.V. coil)

CN931, CN932 (Fan motor)

CN671 (Defrost temperature thermistor, discharge temperature thermistor and outdoor heat exchanger temperature thermistor)

CN672 (Ambient temperature thermistor)

CN724 (Expansion valve coil)

CN601 (Defrost heater and heater protector)

CN64 (Compressor protector)

(3) Remove the compressor connector (CN61).

(4) Remove the screws fixing the heat sink support and the separator.

(5) Remove the screws fixing the P.C. board support and the motor support.

(6) Remove the fixing screws of the terminal block support and the back panel.

(7) Remove the inverter assembly.

(8) Remove the screws of the ground wires and the terminal block support.

(9) Remove the screw of the heat sink support, and the heat sink support from the P.C. board support.

Photo 3

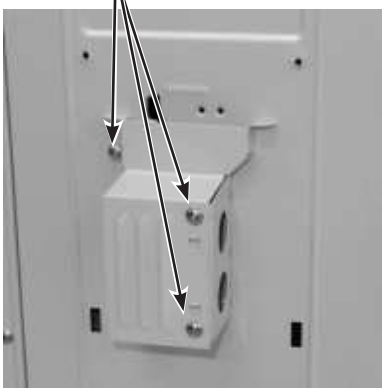

Photo 4

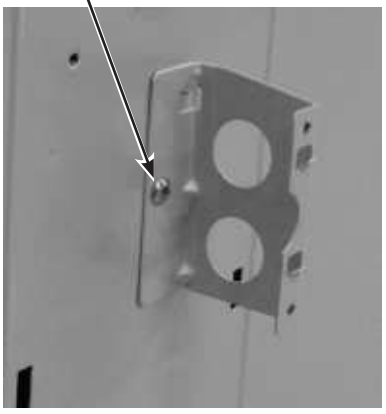

Photo 6 (Inverter assembly)

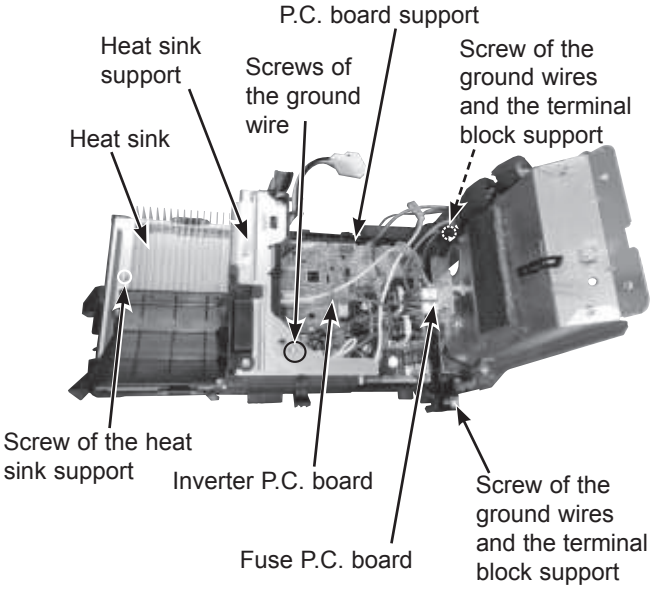

Photo 5

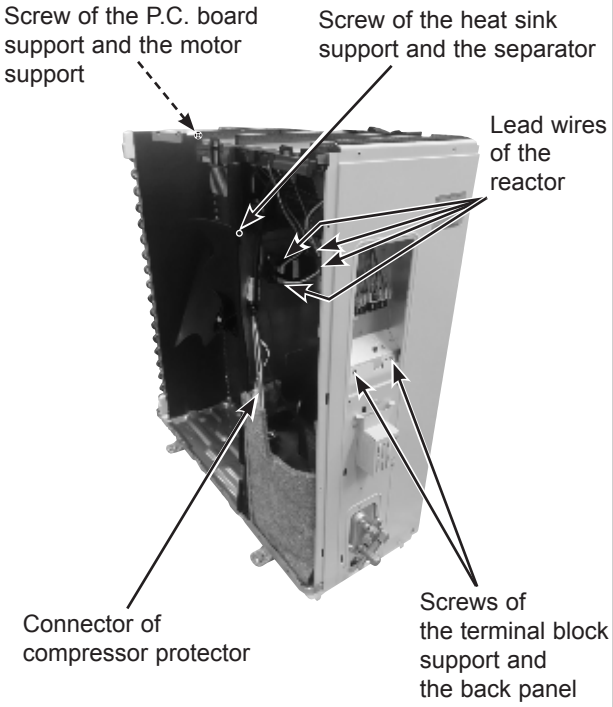

OPERATING PROCEDURE	PHOTOS/FIGURES

*** Connection procedure when attaching the inverter P.C. board (Photo 8, 9)**

1. Attach the heat sink support to the P.C. board support.
2. Hook the lead wires of the compressor, the reactor and the P.C. board to each hooks on the heat sink support as shown Photo 8.
3. Connect the lead wires of the expansion valve coil to the connector on the inverter P.C. board. Pull the lead wires of the expansion valve coil toward you and put them on the hook on the P.C. board support as shown in Photo 9.
4. Tighten the lead wires of the fan motor (CN931, CN932), defrost temperature thermistor, discharge temperature thermistor, outdoor heat exchanger temperature thermistor and ambient temperature thermistor with the fastener as shown in Photo 9.

Photo 7

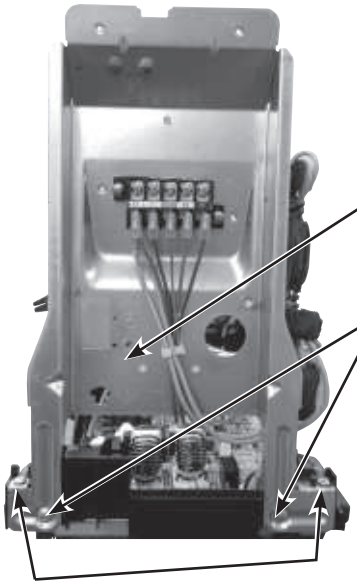

Photo 8

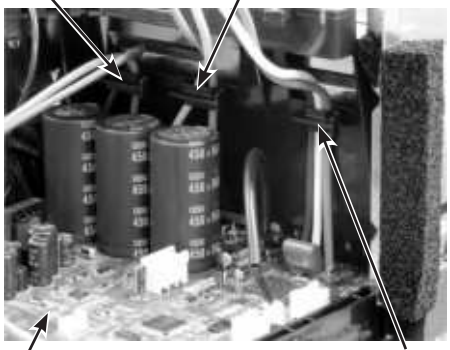

Photo 9

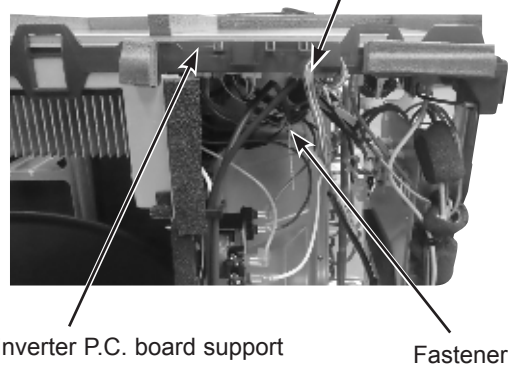

OPERATING PROCEDURE	PHOTOS/FIGURES
2-2. Removing the fuse P.C. board (1) Remove the top panel, cabinet and service panel. (Refer to section 1.) (2) Disconnect the lead wire to the reactor and the inverter P.C. board connectors. (Refer to section 2-1. (2)) (3) Remove the compressor connector (CN61). (4) Remove the screws fixing the heat sink support and the separator. (5) Remove the screws fixing the P.C. board support and the motor support. (6) Remove the fixing screws of the terminal block support and the back panel. (7) Remove the inverter assembly. (8) Remove the following disconnected connectors: <Fuse P.C. board> CN65, CN66 (Terminal block) (9) Remove the fuse P.C. board from the supports. (Photo 11)	**Photo 10** 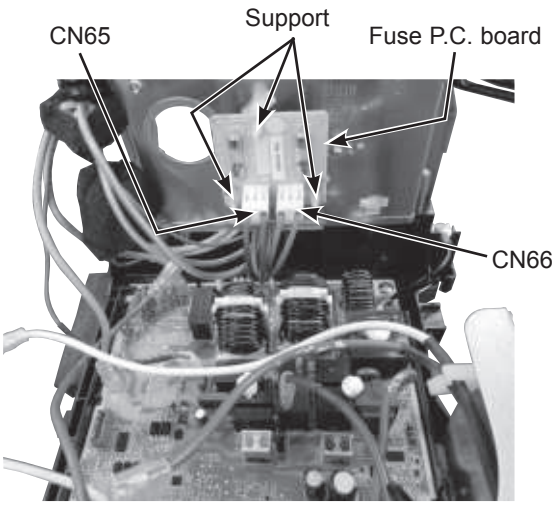 **Photo 11** 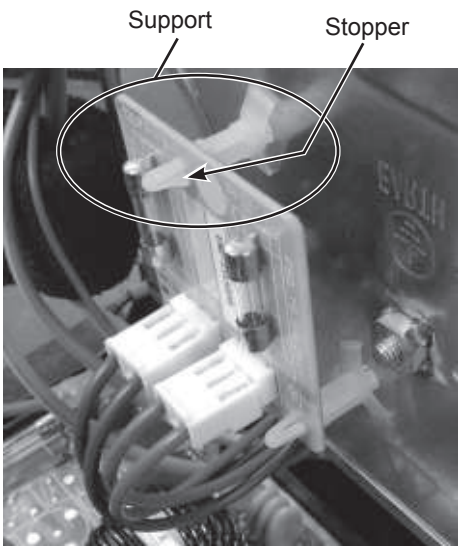 Pinch the stopper of the support, and push it into the hole to remove the fuse P.C. board.

OPERATING PROCEDURE	PHOTOS/FIGURES
3. Removing the discharge temperature thermistor, defrost temperature thermistor, outdoor heat exchanger temperature thermistor and ambient temperature thermistor (1) Remove the cabinet and panels. (Refer to section 1.) (2) Disconnect the lead wire to the reactor and the following connectors: <Inverter P.C. board> CN671 (Defrost temperature thermistor, discharge temperature thermistor and outdoor heart exchanger temperature thermistor) CN672 (Ambient temperature thermistor) (3) Pull out the discharge temperature thermistor from its holder. (Photo 14) (4) Pull out the defrost temperature thermistor from its holder. (5) Pull out the outdoor heat exchanger temperature thermistor from its holder. (Photo 12) (6) Pull out the ambient temperature thermistor from its holder.	**Photo 12** 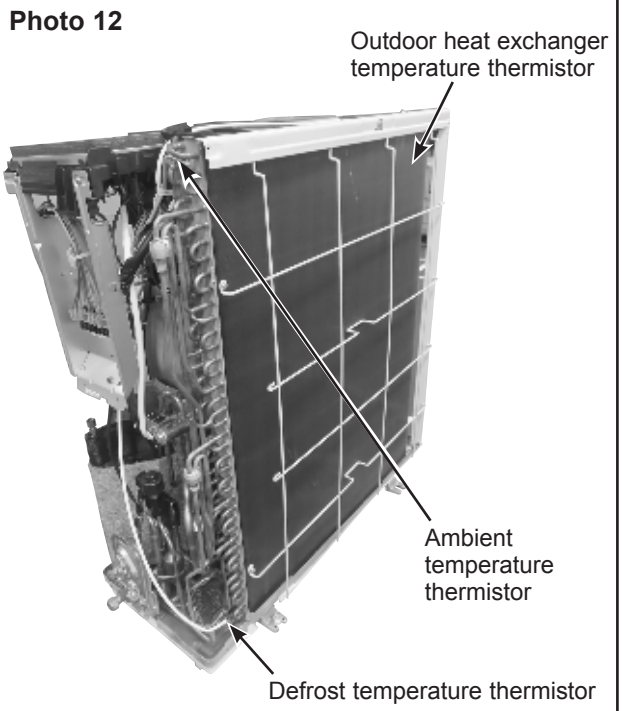
4. Removing outdoor fan motor (1) Remove the top panel, cabinet and service panel. (Refer to section 1.) (2) Disconnect the following connectors: <Inverter P.C. board> CN931, CN932 (Fan motor) (3) Remove the propeller fan nut. (4) Remove the propeller fan. (5) Remove the screws fixing the fan motor. (6) Remove the fan motor.	**Photo 13** 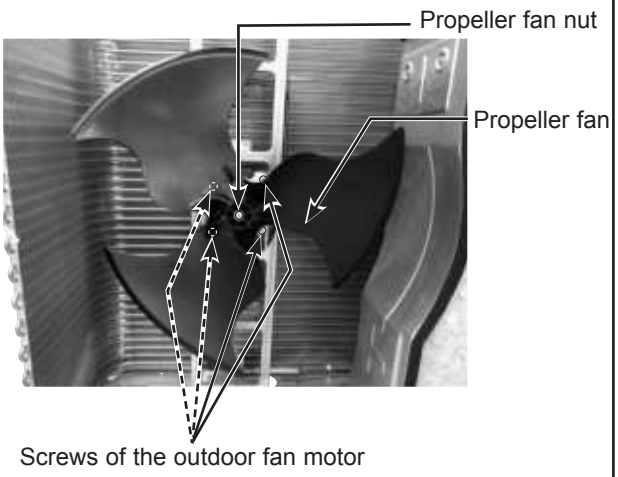

OPERATING PROCEDURE	PHOTOS/FIGURES

5. Removing the compressor and 4-way valve

(1) Remove the cabinet and panels. (Refer to section 1.)
(2) Remove the inverter assembly. (Refer to section 2)
(3) Remove the screws fixing the reactor.
(4) Remove the reactor.
(5) Remove the soundproof felt.
(6) Recover gas from the refrigerant circuit.
NOTE: Recover gas from the pipes until the pressure gauge shows 0 psig.
(7) Detach the brazed part of the suction and the discharge pipe connected with compressor.
(8) Remove the compressor nuts.
(9) Remove the compressor.
(10) Remove the screw fixing the R.V. coil (Photo 15)
(11) Remove the R.V. coil
(12) Detach the brazed parts of 4-way valve and pipe. (Photo 15)

Photo 14

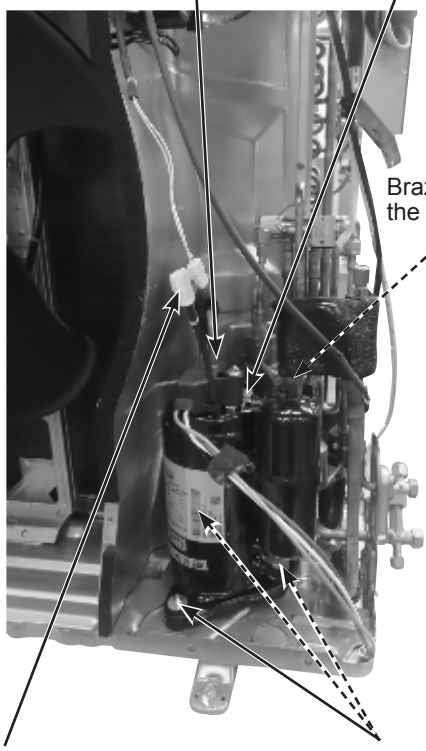

Figure 1

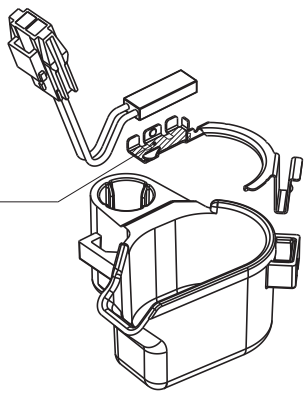

Photo 15

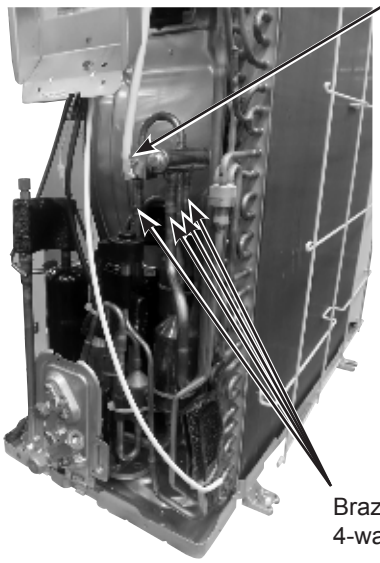

13-2. SUZ-AA24NL SUZ-AA30NL SUZ-AA36NL

NOTE: Turn OFF the power supply before disassembly.

→: Indicates the visible parts in the photos/figures.
--→: Indicates the invisible parts in the photos/figures.

OPERATING PROCEDURE

1. Removing the cabinet

(1) Remove the screws of the service panel.
(2) Remove the screws of the top panel.
(3) Remove the screw of the valve cover.
(4) Remove the service panel.
(5) Remove the top panel.
(6) Remove the valve cover.
(7) Remove the screws fixing the conduit cover. (Photo 3)
(8) Remove the conduit cover.
(9) Remove the screw fixing the conduit plate. (Photo 4)
(10) Remove the conduit plate.
(11) Disconnect the power supply and indoor/outdoor connecting wire.
(12) Remove the screws of the cabinet.
(13) Remove the cabinet.
(14) Remove the screws of the back panel.
(15) Remove the back panel.

Photo 2

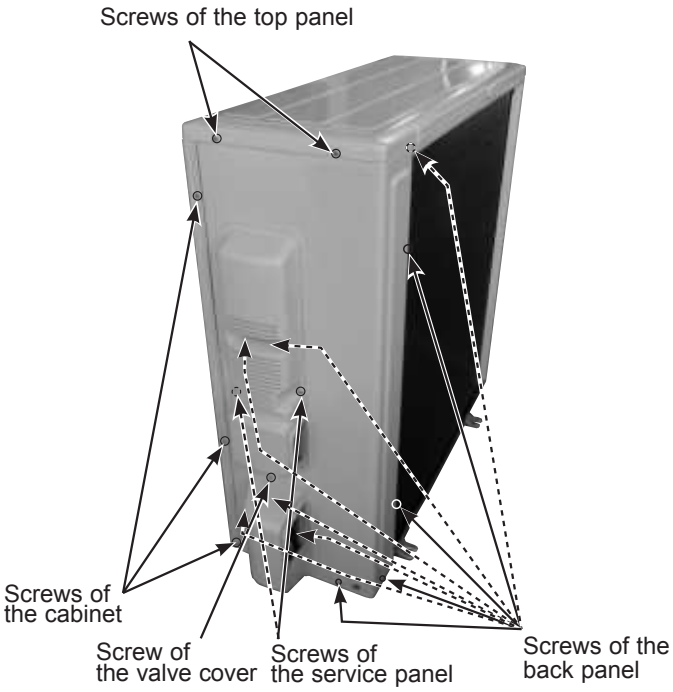

PHOTOS/FIGURES

Photo 1

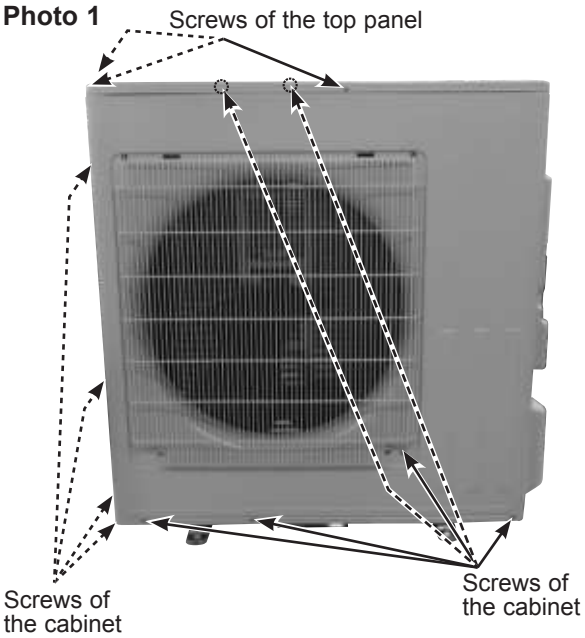

Photo 3

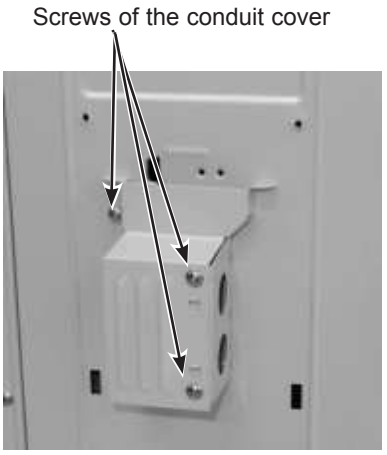

Photo 4

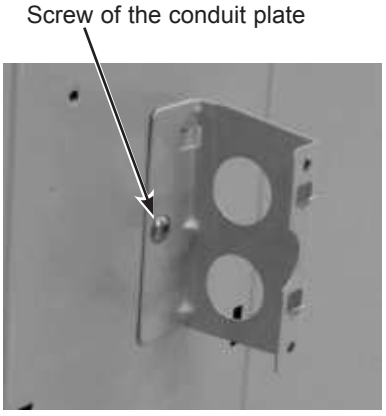

OPERATING PROCEDURE	PHOTOS/FIGURES

2. Removing the inverter assembly, inverter P.C. board and fuse P.C. board

2-1. Removing the inverter assembly and inverter P.C. board

(1) Remove the top panel, cabinet and service panel. (Refer to section 1.)
(2) Disconnect the lead wire to the reactor and the following connectors:
<Inverter P.C. board>
CN602 (R.V. coil)
CN931, CN932 (Fan motor)
CN671 (Defrost temperature thermistor, discharge temperature thermistor and outdoor heat exchanger temperature thermistor)
CN672 (Ambient temperature thermistor)
CN724 (Expansion valve coil)
CN601 (Defrost heater and heater protector)
CN64 (Compressor protector)
(3) Remove the compressor connector (CN61).
(4) Remove the screws fixing the heat sink support and the separator.
(5) Remove the screws fixing the P.C. board support and the motor support.
(6) Remove the fixing screws of the terminal block support and the back panel.
(7) Remove the inverter assembly.
(8) Remove the screws of the ground wires and the terminal block support.
(9) Remove the screw of the heat sink support, and the heat sink support from the P.C. board support.

Photo 5

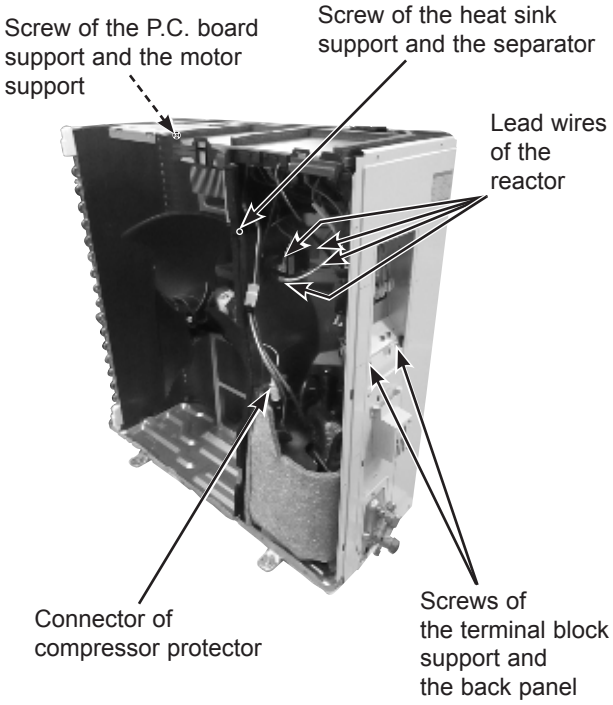

Photo 6 (Inverter assembly)

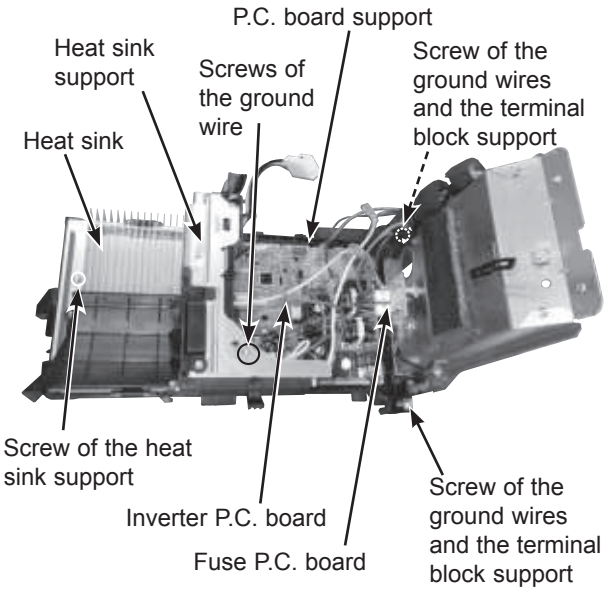

OPERATING PROCEDURE	PHOTOS/FIGURES

*** Connection procedure when attaching the inverter P.C. board (Photo 8, 9)**

1. Attach the heat sink support to the P.C. board support.
2. Hook the lead wires of the compressor, the reactor and the P.C. board to each hooks on the heat sink support as shown Photo 8.
3. Connect the lead wires of the expansion valve coil to the connector on the inverter P.C. board. Pull the lead wires of the expansion valve coil toward you and put them on the hook on the P.C. board support as shown in Photo 9.
4. Tighten the lead wires of the fan motor (CN931, CN932), defrost temperature thermistor, discharge temperature thermistor, outdoor heat exchanger temperature thermistor and ambient temperature thermistor with the fastener as shown in Photo 9.

Photo 7

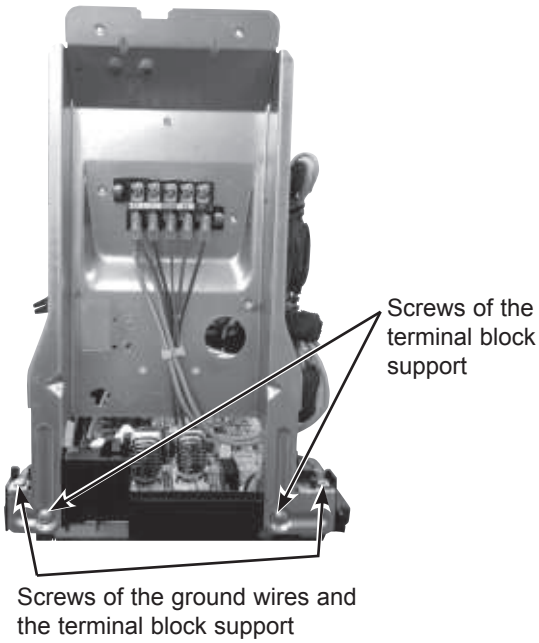

Photo 8

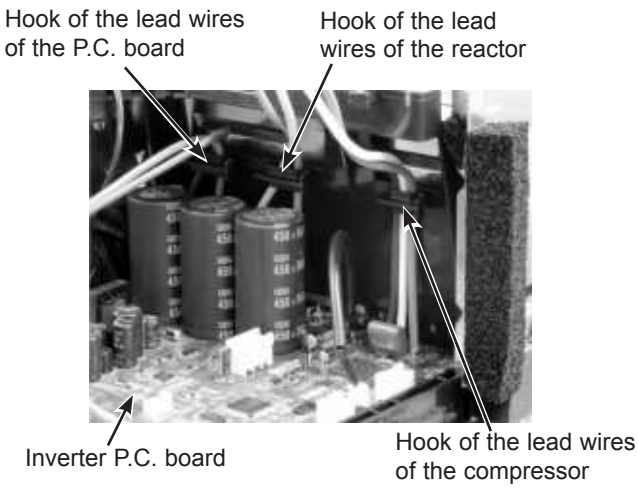

Photo 9

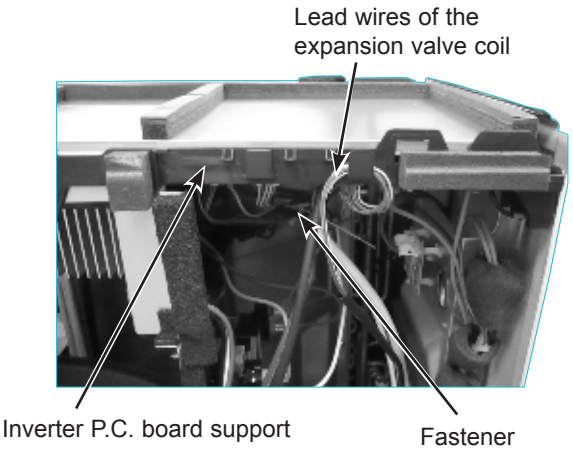

OPERATING PROCEDURE	PHOTOS/FIGURES
2-2. Removing the fuse P.C. board (1) Remove the top panel, cabinet and service panel. (Refer to section 1.) (2) Disconnect the lead wire to the reactor and the inverter P.C. board connectors. (Refer to section 2-1. (2)) (3) Remove the compressor connector (CN61). (4) Remove the screws fixing the heat sink support and the separator. (5) Remove the screws fixing the P.C. board support and the motor support. (6) Remove the fixing screws of the terminal block support and the back panel. (7) Remove the inverter assembly. (8) Remove the following disconnected connectors: <Fuse P.C. board> CN65, CN66 (Terminal block) (9) Remove the fuse P.C. board from the supports. (Photo 11)	**Photo 10** 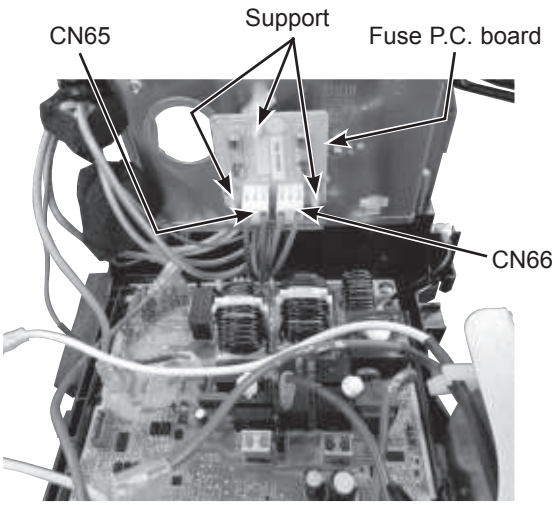 **Photo 11** 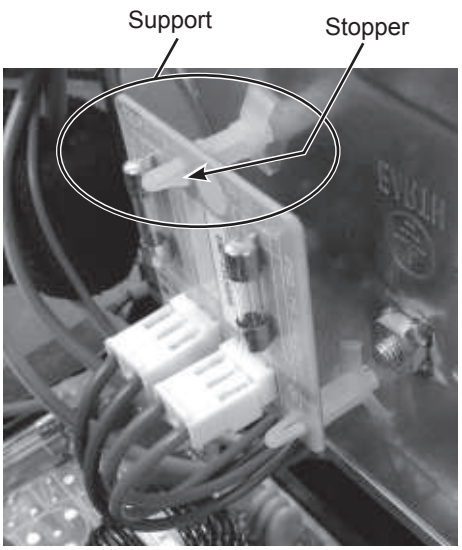 Pinch the stopper of the support, and push it into the hole to remove the fuse P.C. board.

OPERATING PROCEDURE	PHOTOS/FIGURES
3. Removing the discharge temperature thermistor, defrost temperature thermistor, outdoor heat exchanger temperature thermistor and ambient temperature thermistor (1) Remove the cabinet and panels. (Refer to section 1.) (2) Disconnect the lead wire to the reactor and the following connectors: <Inverter P.C. board> CN671 (Defrost temperature thermistor, discharge temperature thermistor and outdoor heart exchanger temperature thermistor) CN672 (Ambient temperature thermistor) (3) Pull out the discharge temperature thermistor from its holder. (Photo 14) (4) Pull out the defrost temperature thermistor from its holder. (5) Pull out the outdoor heat exchanger temperature thermistor from its holder. (Photo 12) (6) Pull out the ambient temperature thermistor from its holder.	**Photo 12** 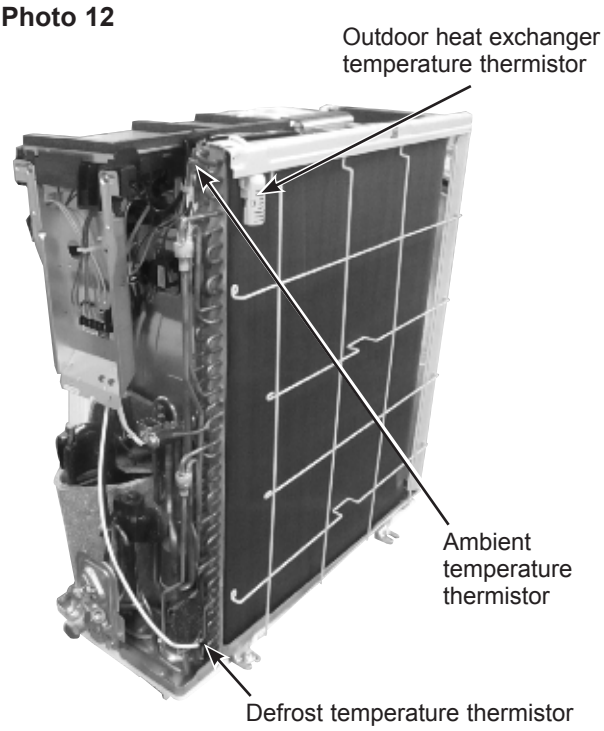
4. Removing outdoor fan motor (1) Remove the top panel, cabinet and service panel. (Refer to section 1.) (2) Disconnect the following connectors: <Inverter P.C. board> CN931, CN932 (Fan motor) (3) Remove the propeller fan nut. (4) Remove the propeller fan. (5) Remove the screws fixing the fan motor. (6) Remove the fan motor.	**Photo 13** 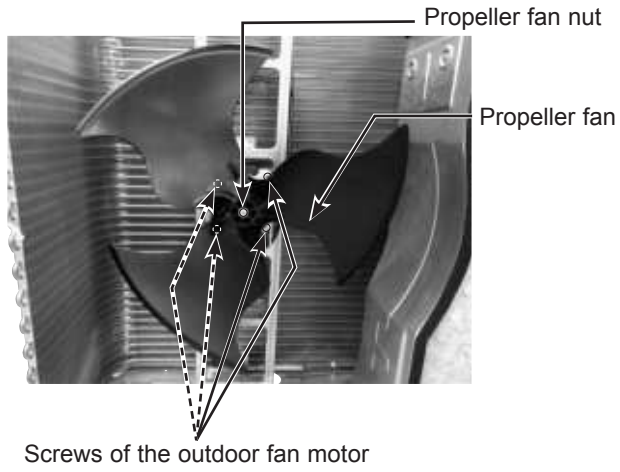

OPERATING PROCEDURE	PHOTOS/FIGURES

5. Removing the compressor and 4-way valve

(1) Remove the cabinet and panels. (Refer to section 1.)
(2) Remove the inverter assembly. (Refer to section 2)
(3) Remove the screws fixing the reactor.
(4) Remove the reactor.
(5) Remove the soundproof felt.
(6) Recover gas from the refrigerant circuit.
NOTE: Recover gas from the pipes until the pressure gauge shows 0 psig.
(7) Detach the brazed part of the suction and the discharge pipe connected with compressor.
(8) Remove the compressor nuts.
(9) Remove the compressor.
(10) Remove the screw fixing the R.V. coil (Photo 15)
(11) Remove the R.V. coil
(12) Detach the brazed parts of 4-way valve and pipe. (Photo 15)

Photo 14

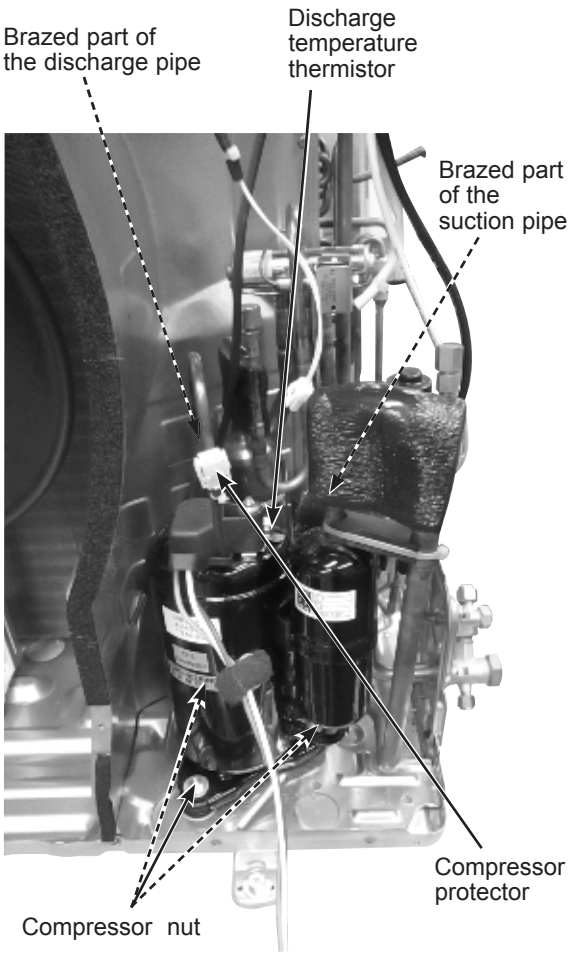

Figure 1

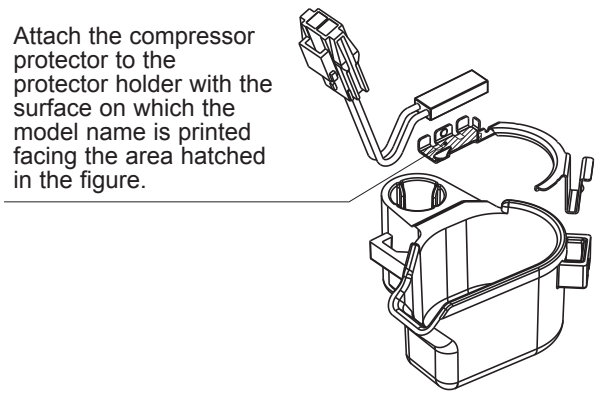

Photo 15

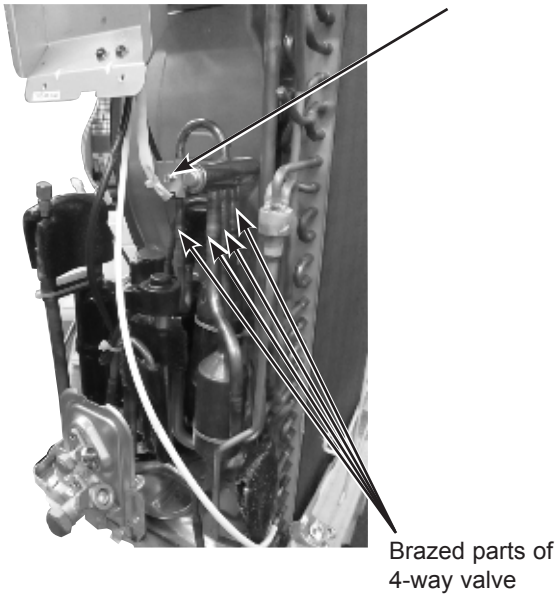

MITSUBISHI ELECTRIC CORPORATION

HEAD OFFICE : TOKYO BUILDING, 2-7-3, MARUNOUCHI, CHIYODA-KU, TOKYO 100-8310, JAPAN

MITSUBISHI ELECTRIC CONSUMER PRODUCTS (THAILAND) CO., LTD.
700/406 MOO 7 TAMBON DON HUA ROH,
AMPHUR MUANG, CHONBURI 20000 THAILAND
Issued: Mar. 2026. No. TCH142 REVISED EDITION-C
Issued: Oct. 2025. No. TCH142 REVISED EDITION-B
Issued: Apr. 2025. No. TCH142 REVISED EDITION-A
Published: Sep. 2024. No. TCH142
Made in Thailand

Specifications are subject to change without notice.