Installation, Operation and Maintenance Manual

Basic Butler Package

mr.steam® | Feel Good Inc.

Installation, Operation & Maintenance Manual

iTEMPO® & iTEMPOPLUS® CONTROLS

mr.steam® | Feel Good Inc.

www.mrsteam.com

When installing and using this electrical equipment, basic safety precautions should always be followed, including the following:

IMPORTANT SAFETY INSTRUCTIONS

1. **READ AND FOLLOW ALL INSTRUCTIONS**
2. ⚠WARNING Supervise children at all times.
3. ⚠WARNING Steam is hot and can cause injury or death if improperly used. Steam rooms contain steam and elevated temperatures. Please read and observe all warnings in this manual before installing or using a steam room.
4. ⚠WARNING To reduce the risk of injury:
   A. The wet surfaces of steam enclosures may be slippery. Use care when entering or leaving.
   B. The steam head is hot. DO NOT touch the steamhead and avoid the steam near the steamhead.
   C. Prolonged use of the steam system can raise excessively the internal human body temperature and impair the body's ability to regulate its internal temperature (hyperthermia). Limit your use of steam to 10-15 minutes until you are certain of your body's reaction.
   D. Excessive temperatures have a high potential for causing fetal damage during the early months of pregnancy. Pregnancy or possibly pregnant women should consult a physician regarding correct exposure.
   E. Obese persons and persons with a history of heart disease, low or high blood pressure, circulatory system problems, or diabetes should consult a physician before using a steambath.
   F. Persons using medication should consult a physician before using a steambath since some medication may induce drowsiness while other medications may affect heart rate, blood pressure and circulation.

SAVE THESE INSTRUCTIONS

HYPERTHERMIA occurs when the internal temperature of the body reaches a level several degrees above the normal body temperature of 98.6° F. The symptoms of hyperthermia include an increase in the internal temperature of the body, dizziness, lethargy, drowsiness, and fainting. The effects of hyperthermia include:

a) Failure to perceive heat;

b) Failure to recognize the need to exit the steambath;

c) Unawareness of impending risk;

d) Fetal damage in pregnant women;

e) Physical inability to exit the steambath;

and

f) Unconsciousness.

⚠WARNING
The use of alcohol, drugs, or medication can greatly increase the risk of hyperthermia.

READ ME FIRST!

WARNING As you follow these instructions, you will notice warning and caution symbols. This blocked information is important for the safe and efficient installation and operation of this generator. These are types of potential hazards that may occur during installation and operation:

WARNING Indicates a potentially hazardous situation, which, if not avoided, could result in death or serious injury.

CAUTION Indicates a potentially hazardous situation, which, if not avoided may result in minor or moderate injury or product damage.

IMPORTANT NOTE: This highlights information that is especially relevant to a problem-free installation.

All information in these instructions is based on the latest product information available at the time of publication. Sussman-Automatic Corporation reserves the right to make changes at any time without notice.

Table of Contents:

Important Safety Instructions.....3
Before Installing.....5
Dimensional Information 6
Installations.....7-9
iTempo Operating Instructions 10-11
iTempoPlus Operating Instructions.....12-15
Care and Maintenance 16
Warranty 16

BEFORE INSTALLING

Carefully inspect the control and packaging for shipping damage. In the event of shipping damage, please contact the carrier for claim information. Our customer service department can assist you with any missing or damaged parts.

CAUTION To avoid unintentional steambath operation, do not locate the control where other controls, accessories, shower heads, valves, body sprays or similar within the shower could cause confusion or interfere with the MrSteam control's intended use and function.

Do not use any iTempoPlus®, iTempo®, HomeWizard® or iGenie® controls without reading and understanding the respective Installation and Operation Manual and MrSteam steam generator Installation and Operation Manual. Failure to read and understand these instructions may result in an inoperative or hazardous installation.

WARNING A peel and stick warning sticker is provided in the MrSteam steam generator Installation, Operation and Maintenance Manual. This manual is provided with every steam generator. The warning sticker must be read and permanently affixed in a conspicuous location near the steam room. Failure to read and affix this warning sticker in a conspicuous location may result in serious injury or death. Please call MrSteam at 800 767-8326 for a free replacement or if you have any questions regarding the warning sticker.

Install the iTempo or iTempoPlus controls according to installation instructions. Failure to install according to instructions will result in an inoperative control or hazardous overheating or inadequate heating of the steam room. Failure to install according to instructions will result in an inoperative control and overheating of the steam room.

IMPORTANT NOTE: If the desired location for the control is outside the steam room a Remote Temperature Probe (MSTS) must be installed inside the steam room. Contact MrSteam technical service 1-800-767- 8326 for more information on the Remote Temperature Probe.

WARNING Do not route iTempoPlus, iTempo, HomeWizard or iGenie control wiring inside conduit together with power lines or close to hot water or steam piping. Doing so may result in an inoperative or hazardous installation.

WARNING Do not alter or modify any MrSteam product. Doing so may result in an inoperative or hazardous installation and will void the warranty.

IMPORTANT NOTES:

- Turn power to the steam generator OFF before connecting the control to the generator. Failure to turn the power off will result in an inoperable control.
- Do not operate iTempoPlus, iTempo, Home Wizard or iGenie controls with anything other than a MrSteam iTempo compatible steam generator. MrSteam residential steam generators with serial numbers lower than 900000, or any other brand of steam generator are not to be operated with iTempo controls. Doing so may result in an inoperative installation.
- This document contains important safety, operation and maintenance information. Leave this document with the homeowner. Do not discard this document.
- Discontinue use of the steam generator or control if the steam generator is damaged or otherwise not functioning properly. Doing so may result in an inoperative or hazardous installation.
- All illustrations are for illustrative purposes only.

Dimensional Information for the Round and Square iTempo® and iTempoPlus®

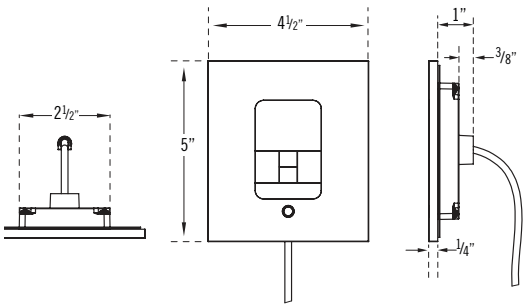

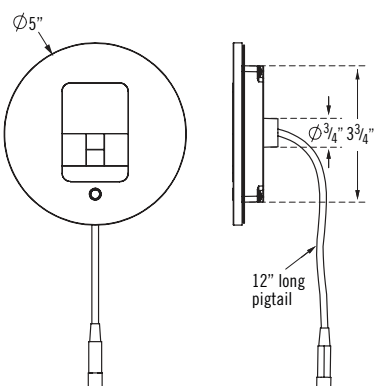

Box Contents:

- iTempo or iTempoPlus Control
- Control Cable (30 ft.)
- Steam head
- Tube of Silicone sealant
- Owner's Manual

Drawings for Illustrative Purposes Only.

Installation Instructions for Round & Square iTempo® and iTempoPlus®

IMPORTANT NOTE: If the desired location for the control is outside the steam room a Remote Temperature Probe (MSTS) must be installed inside the steam room. Contact MrSteam technical service 1-800-767-8326 for more information on the Remote Temperature Probe.

NOTE: The connector is keyed with the flat facing up. The control cable is the same at both ends.

STEP 1

Determine the desired installation location of the control. The iTempo and iTempoPlus controls are designed to be installed inside or outside the steam room as a matter of personal preference. If the control is installed inside the steam room the control must be located:

- 4-5 feet above the floor near the bather seating area.
- The control features an integral temperature sensor. Locate the control in a location representative of the desired steam bathing temperatures. Do not locate the control above or near the steam head or direct steam emissions. Locating the controls near the steamhead or near direct steam emissions may result in poor steam room temperature control.
- On a vertical wall
- The control cable length is 30 feet. Insure that the control and/or steam generator are located accordingly. Contact a MrSteam technical service representative if a longer cable is required (60 ft. cable, PN 103990-60).

IMPORTANT NOTE: The control cable should be run in a dedicated 1" conduit to facilitate installation and service. Be careful not to strain, staple, pinch or otherwise damage the control cable. Route cable as required to permit replacement. Do not route cable inside conduit together with power lines or close to hot water or steam piping.

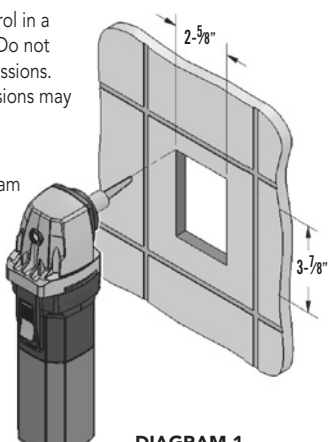

DIAGRAM 1

Drawings for Illustrative Purposes Only.

STEP 2 Diagram 1
Make a 2-5/8" wide by 3-7/8" high cutout in the desired control location. Do not oversize or under size the cutout.

STEP 3 Diagram 2
Route the control cable (provided with the control) from the wall cutout to the steam generator. Connect one end of the cable to the steam generator connector.

NOTE: The connector is keyed with the flat facing up. The control cable is the same at both ends.

STEP 4 Diagram 3
Firmly connect the other end of the cable to the control. Turn on power to the steam generator and test the control to verify correct connections. Test per the instructions on pages 10-15. With verification of proper control function, proceed to Step 5.

CAUTION If the generator is on for more than a few minutes steam will start coming out of the steamhead. Insure that the steam room is not occupied.

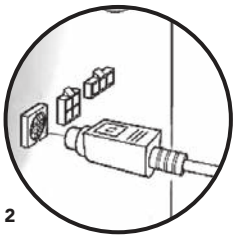

DIAGRAM 2

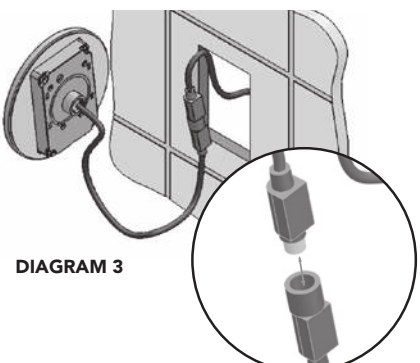

DIAGRAM 3

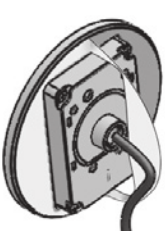

DIAGRAM 4

Drawings for Illustrative Purposes Only.

STEP 5 Diagram 4

Remove and discard peel-off paper to expose adhesive liner.

STEP 6 Diagram 5

Run a bead of silicone (provided) as shown to the outer edge of the control faceplate, following the contour of the circle or square shape. Use silicone as required to create a moisture seal.

NOTE: The silicone supplied by MrSteam can be used to meet a variety of sealing and gasketing. It cures to silicone rubber and adheres to glass, wood, metal, porcelain, ceramic tile, painted surfaces, many plastics and rubber. Surfaces must be clean and dry. Apply thin layer of product. Fit together and support if necessary. Allow excess material to cure, then trim with a sharp blade. Sealant "skins" in 5 minutes, dries to touch in 1 hour. Fully cures and bonds in 24 hrs.

IMPORTANT NOTE: Do not apply excessive amounts of silicone. Do not apply silicone to any other parts of the control including the adhesive gasket.

STEP 7 Diagram 6

Insure the mounting surface is clean and dry as required for good adhesion. Hold the control with the LED display in the 12 o'clock position and press the control against the wall until the adhesive sticks

DIAGRAM 5

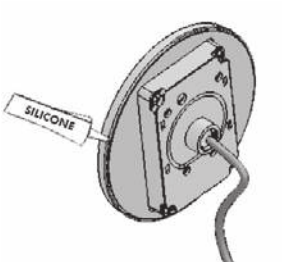

DIAGRAM 6

Drawings for Illustrative Purposes Only.

iTempo® Operating Instructions

The iTempo Control features programmable digital temperature control, a fixed (60) minute duration, ON/OFF and PAUSE. The control can be set at a temperature range from 80˚F up to 120˚F

WARNING Set the steam bathing temperature according to personal preference, however it is highly recommended to begin steam bathing at a low temperature setting for a very short duration to gauge comfort and safety levels.

ON/OFF Diagram 1
Press the ON/OFF key to start or stop the flow of steam. Steam will begin to flow a few minutes after the control is turned ON. The duration required for the steam room to reach steam bathing temperatures depends on the steam room construction and steam generator specifications. Steam may continue to flow for a short time after the control is turned OFF.

PAUSE FEATURE Diagram 2
If a pause in steam flow is desired press the PAUSE key. The display will flash while the control is in the PAUSE mode. The timer will continue to countdown while in the PAUSE mode. Steam may continue to flow for a short time after pause is pressed.

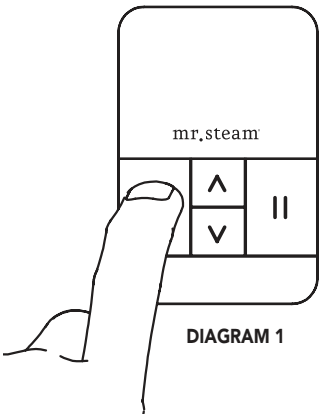

DIAGRAM 1

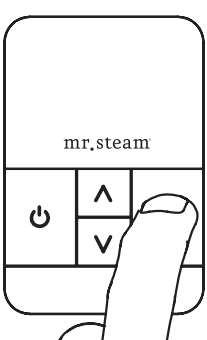

DIAGRAM 2

Drawings for Illustrative Purposes Only.

TIMER FEATURE

When the control is turned ON a 60 minute time duration is initiated. The control will turn off after 60 minutes unless the control is turned off manually.

MEMORY FEATURE

If the control is turned off manually before 60 minutes then the default temperature of 110˚F will be used the next time the control is turned on. If the control times out at 60 minutes (not manually turned off) then the previous user temperature setting will be used when the steambath is used again.

SETTING THE TEMPERATURE

Diagram 3

The control is pre-set and will display the temperature setting of 110˚F (default setting). Use the UP and DOWN keys to change the temperature setting from 80˚ F to 120˚ F in one degree increments.

CHANGING THE TEMPERATURE UNITS (F˚/C˚) Diagram 4

When the generator is Off, Press and hold ON/OFF key for 10 seconds. The temperature units will be displayed as Fahrenheit (TuF) or Celsius (TuC). Use the UP/DOWN keys to choose between (TuF) and (TuC). Press ON/OFF key to accept the new units and exit.

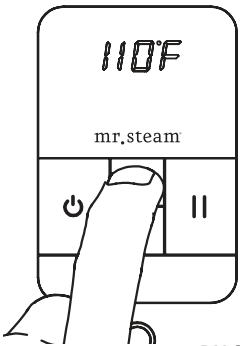

DIAGRAM 3

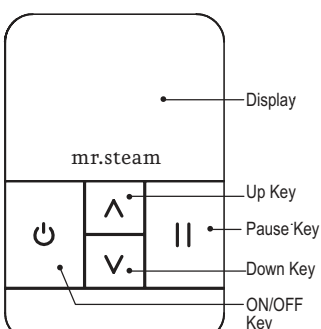

DIAGRAM 4

Drawings for Illustrative Purposes Only.

iTempoPlus® Operating Instructions

The iTempoPlus Control features programmable temperature control, programmable time duration, clock, AromaSteam, ChromaSteam®, ON/OFF and two personal settings.

WARNING Set the steam bathing temperature according to personal preference, however it is highly recommended to begin steam bathing at a low temperature setting for a very short duration to gauge comfort and safety levels.

POWERING UP THE UNIT Diagram 1
When the generator is first powered up or after a power interruption, the clock display flashes and the clock is ready to be set up.

NOTE: Pressing the ON/OFF will start the generator even if the clock has not been set.

NOTE: The clock can only be set when the generator is OFF, the display is flashing.

SETTING THE CLOCK

ON/OFF Diagram 2
Press the ON/OFF key to start or stop the flow of steam. The Temperature Set Point is displayed. Steam will begin to flow a few minutes after the control is turned ON. The duration required for the steam room to reach steam bathing temperatures depends on the steam room construction and steam generator specifications. Steam may continue to flow for a short time after the control is turned OFF.

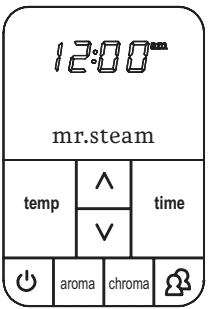

DIAGRAM 1

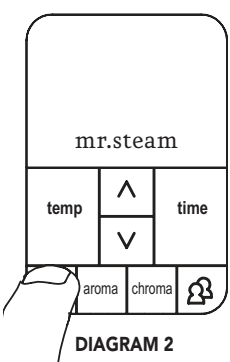

DIAGRAM 2

Drawings for Illustrative Purposes Only.

SETTING THE CLOCK Diagram 3

When the display is not flashing: Press and hold the TIME key until the display starts flashing.

Use the UP/DOWN keys to select the desired time, at this time the AM/PM logo will be displayed. Press the TIME key to save changes.

DIAGRAM 3

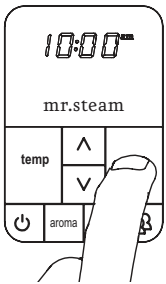

SETTING THE STEAMBATH DURATION

Diagram 4

Press TIME key to set or display the steambath duration time on the clock. The control is pre-set and will display a TIME setting of 20 minutes (default setting). With the TIME or CLOCK displayed, press the UP or DOWN keys (Diagram 5) to set the desired duration time (2-60 minutes) in two minute increments.

Set the steambath duration according to personal preference, however it is highly recommended to begin steam bathing at a very short duration to gauge comfort and safety levels. The control will turn off when the duration period times out. Then, the clock time will be displayed.

DIAGRAM 4

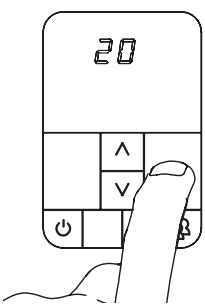

DIAGRAM 5

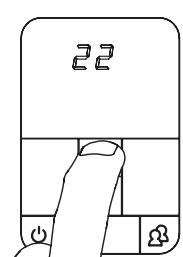

Drawings for Illustrative Purposes Only.

SETTING THE TEMPERATURE

Diagram 6: Press TEMP key to set the desired temperature or display the temperature setting.

Diagram 7: The control is preset and will display a temperature setting of 110˚F (default setting). With the temperature displayed, press the UP or DOWN keys to set the desired temperature (80°F to 120°F) in one degree increments.
Set the steam bathing temperature according to personal preference, however it is highly recommended to begin steam bathing at a low temperature setting to gauge comfort and safety levels.

MEMORY FEATURE

If the control is turned off manually before it times out then the default settings of 20 minutes and 110°F will be used the next time the control is turned on. If the control times out (not manually turned off) then the previous user time and temperature settings will be used when the steambath is turned on.

PERSONAL SETTINGS Diagram 8

Use the program key to store preferred settings.
To program preferred settings:

Press ON/OFF key to turn generator on.
Press the Program key once to program Pr 1.
Press it twice to program Pr 2. The selected parameter will be displayed. Enter the preferred time and temperature settings.

The iTempoPlus will store the following settings: set point, time duration & aroma state. To select Pr 1 or Pr 2:

Press ON/OFF key then press the Program key once to select Pr 1, press it twice to select Pr 2. The steambath will begin to operate at the stored settings.

DIAGRAM 6

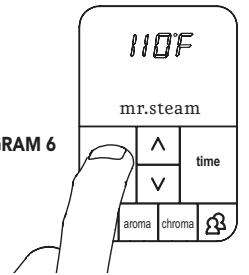

DIAGRAM 7

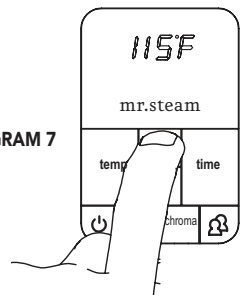

DIAGRAM 8

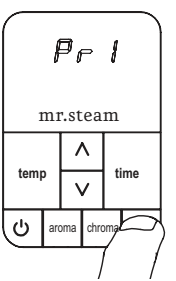

Drawings for Illustrative Purposes Only.

CHANGING THE TEMPERATURE UNITS

(˚F/˚C)

When the generator is Off, Press and hold ON/OFF key for 10 seconds. The temperature units will be displayed as Fahrenheit (TuF) or Celsius (TuC). Use the UP/DOWN keys to choose between (TuF) and (TuC). Press ON/OFF key to accept the new value and exit.

AROMASTEAM Diagram 9

The AromaSteam is an optional accessory that automatically injects aromatic oil into the steam. Press the ON/OFF key to turn the steam generator on. Then, press the AROMA key. The Aroma indicator will be displayed. The AromaSteam turns off automatically when the steam generator stops heating. Press the AROMA key to turn it off during a steam session. The indicator will turn off.

CHROMASTEAM® Diagram 10

The ChromaSteam is an optional accessory that provides colored light in the steam room. Press the CHROMA key to turn light on. Press twice to select the next color. Press again to turn the light off. Note that the light can be turned ON even if the steam generator is OFF.

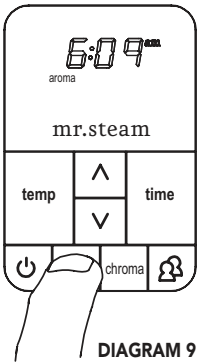

DIAGRAM 9

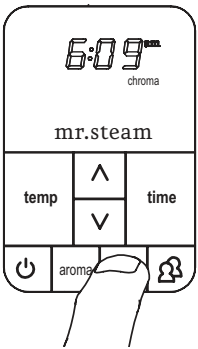

DIAGRAM 10

Drawings for Illustrative Purposes Only.

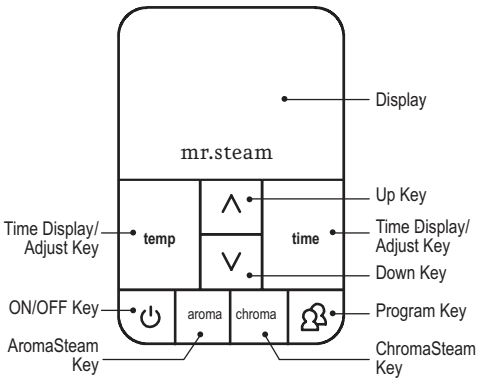

Care Tips for all Controls and Steamheads

1. Use only mild soap and water on a soft cloth to clean the control and steamhead.
2. Do not use abrasive cleansers
3. If the decorative cover is damaged on the iTempo® or iTempoPlus® call MrSteam technical service for replacement parts.

NOTE: Replacement of the decorative covers requires removal and reinstallation of the control from the mounting surfaces.

Warranty

To register your steam generator unit online and to review the MrSteam Limited Lifetime Warranty please go to: **blog.mrsteam.com/wr**

Drawings for Illustrative Purposes Only.

mr.steam®

Feel Good Inc.

Products, information and specifications are subject to change without notice.

For more information call Sales & Support at:
1.800.76.STEAM (East Coast) 1.800.72.STEAM (West Coast)

2019 © Sussman-Automatic Corporation MrSteam and des., AromaFlo, AutoFlush, AutoSteam, Butler Package, ChromaSteam, Clean Steam...Every Time, Club Therapy, Digital 1, Express Steam, From Bathroom to Spa, iDream Package, iGenie, iSizing, iSteam, MusicTherapy, Spa Package, Steam@Home, Steam Therapy, Sussman, Valet Package, Virtual Spa System, Voice Genie and Voice Wizard are registered trademarks of Sussman-Automatic Corporation. AudioWizard, HomeWizard, iButler, iTempo, iTempoPlus, Smart Sizing, SteamStart, The Intelligent Steambath are trademarks of Sussman-Automatic Corporation.

PUR 100474A REV 10.19

INSTALLATION INSTRUCTIONS

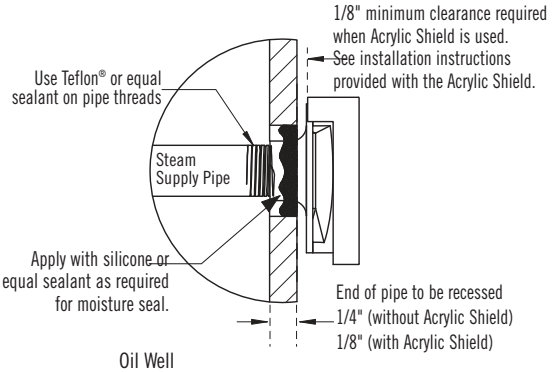

IMPORTANT: See the Installation and Operation Manual provided with the steam generator for additional important steamhead & control installation and operation information.

Installation: Steam Head (3/4" NPT)

CAUTION **INSTALLER:** Because the steam head and direct steam emissions are very hot, locate the steam head where incidental contact by bather with the steam head or direct steam emission cannot occur.

STEP 1 Locate steam head 6-12 inches above floor, except for:

1. Tub/shower enclosures, install 6 inches above tub top edge.
2. For enclosures with acrylic or other non-heat resistant flooring install Acrylic Shield Part Number 103938.
3. To prevent door seals from deteriorating do not locate the steam head where direct steam emission would contact door seals.

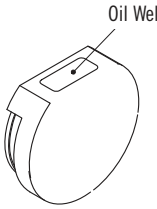

STEP 2 Install steamhead with the oil well facing up as shown. Hand tightening is sufficient when teflon or equal pipe thread sealing compound is used.

IMPORTANT NOTE: to preserve steam head finish, do not use wrench or other tools to tighten. **DO NOT** use abrasive cleansers or chemicals. Use only water with mild soap and a non-abrasive sponge.

CAUTION Consult with supplier of acrylic, fiberglass and other non-heat resistant enclosures for recommended steamhead location. Use Acrylic Shield part number MS-103938. See instructions provided with steam shield.

STEP 3 Secure a bronze drop ear fitting to a header and run a 3/4" copper steamline from the steam generator to the drop ear fitting. Install a temporary nipple (6" or longer)in the drop ear fitting to locate the steamhead after the wall is finished.

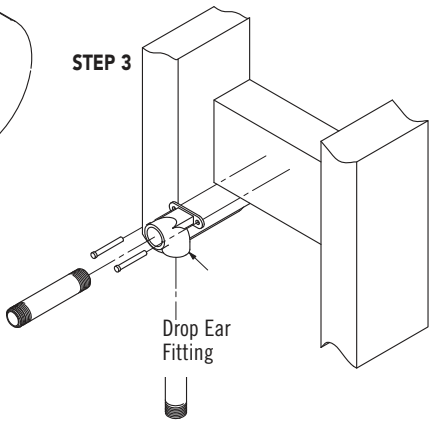

STEP 4 After the wall has been finished, mark on the nipple where the surface of the wall is. Remove the nipple and measure the portion that was in the wall (the end to your mark). Subtract 1/4" from that dimension and select a brass nipple of that length to finish the installation.

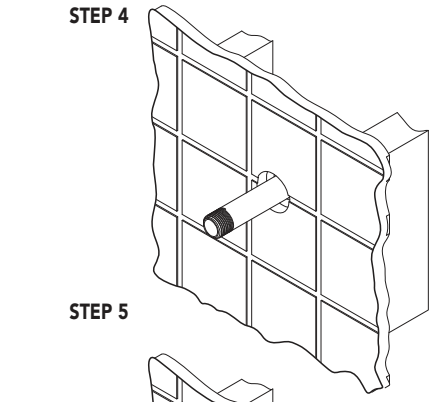

STEP 5 Wrap teflon tape around the threads of the new nipple and screw the nipple into the steamhead. Do not use wrenches or tools which would damage the steamhead's finish. Wrap teflon tape around the threads of the nipple and screw the nipple and steamhead assembly you just made into the drop ear fitting in the wall. The steamhead should be flush with the wall and the well must be facing up.

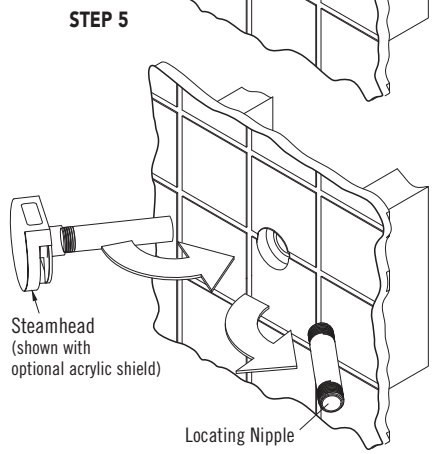

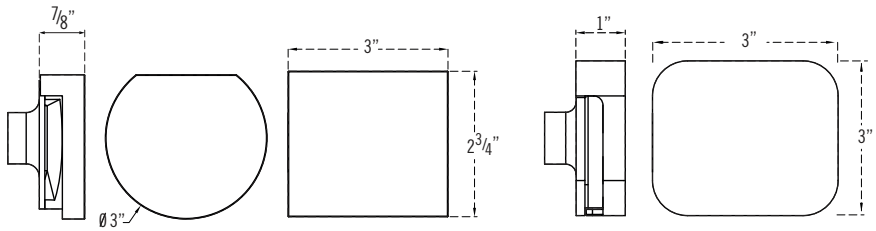

All drawings are for illustrative purposes only

mr.steam® hello@mrsteam.com www.mrsteam.com
43-20 34th Street, Long Island City, NY 11101 tel: 1 800 76 STEAM
9410 S. La Cienega Blvd. Inglewood CA 90301 tel: 1 800 72 STEAM

Installation, Operation and Maintenance Manual

Linear Steam Head

Residential Model: 104480

IMPORTANT: Leave this material with the homeowner.

mr.steam® | Feel Good Inc.®

TABLE OF CONTENTS

Important Safety Information 1-2

Installer Section:

Box Contents 3

Dimensional Information 3

General Installation 4

Faceplate 5

Installer and Home Owner Section:

Steam Emission Zone 6

Diverter 7

AromaTray 8

Replacement Parts 9

Warranty 9

Essential Oils 10

mr.steam® hello@mrsteam.com • www.mrsteam.com

43-20 34th Street, Long Island City, NY 11101 tel: 1 800 76 STEAM

9410 S. La Cienega Blvd. Inglewood CA 90301 tel: 1 800 72 STEAM

Linear Steam Head®

mr.steam®

Installer Section

Model 104480

READ ME FIRST! As you follow these instructions, you will notice **CAUTION** and **NOTICE** symbols. This information is important for the proper, safe and trouble free installation of the Linear Steam Head. These are types of potential hazards that may occur if installation instructions are not carefully followed:

CAUTION This signals a situation where injury or property damage may occur if you do not follow instructions.

NOTICE This highlights information that is especially relevant to a problem free installation.

All information in these instructions is based on the latest information available at the time of publication. MrSteam reserves the right to make changes at any time without notice.

CAUTION The following general information should be used in conjunction with consultations with a qualified architect, designer and contractor in determining factors necessary in providing a suitable and safe steam room.

CAUTION This document contains important safety, operation and maintenance information. After installation leave these instructions with the homeowner. Do not discard this instructions. Failure to leave the instructions with the homeowner may result in property damage or personal injury.

CAUTION Use one or more Linear Steam Heads for MrSteam steam generator models MS90 – MS400 and MSSUPER1–MSSUPER3, SAH3000-SAH6000.

CAUTION Use two or more Linear Steam Heads for MrSteam steam generators Models MX4, MX5 and MX6. Failure to use two or more steam heads may result in steam head operation where incidental contact by the bather with direct steam emission may occur. Failure to use two or more steam heads may result in a leak within the wall cavity and cause problems associated with leaks, moisture and property damage from leaks. Failure to use two or more steam heads may result in a hazardous condition, scalding or personal injury.

CAUTION Do not use Linear Steam Head for any MrSteam steam generator that is not one of the following models: MS90 –MS400, MSSUPER1–MSSUPER3, SAH3000-SAH6000 or MX4 –MX6. Failure to follow these instructions may result in a leak within the wall cavity and cause problems associated with leaks, moisture and property damage from leaks. Failure to follow these instructions may result in a hazardous condition, scalding or personal injury.

CAUTION Do not use the Linear Steam Head with any steam system that is not a MrSteam steam system. Failure to follow these instructions may result in a leak within the wall cavity and cause problems associated with leaks, moisture and property damage from leaks. Failure to follow these instructions may result in a hazardous condition, scalding or personal injury.

CAUTION Because the steam head and direct steam emission are very hot, locate the steam head(s) where incidental contact by the user with the steam head(s) or direct steam emission cannot occur. Do not locate the steam head(s) in any location where the steam emission zone is near a seat,bench or any space occupied by any persons. Failure to following these directions may result in a hazardous condition, scalding or personal injury.

CAUTION Linear Steam Heads are for residential use only. Do not use any Linear Steam Heads for commercial installations or with commercial steam generators (including Day Spas). Using Linear Steam Heads for commercial installations or installations with commercial steam generators may result in a leak within the wall cavity and cause problems associated with leaks, moisture and property damage from leaks. Using Linear Steam Heads for commercial installations or installations with commercial steam generators may result in a hazardous condition, scalding or personal injury.

CAUTION Do not use the Linear Steam Head with any steam system that includes equipment or devices not supplied by MrSteam, including but not limited to water softeners. Failure to follow these instructions may result in a leak within the wall cavity and cause problems associated with leaks, moisture and property damage from leaks. Failure to follow these instructions may result in a hazardous condition, scalding or personal injury.

CAUTION Only install the linear steam head in a horizontal orientation as shown in fig 3. Failure to follow these instructions may result in a leak within the wall cavity and cause problems associated with leaks, moisture and property damage from leaks. Failure to follow these instructions may result in a hazardous condition, scalding or personal injury.

CAUTION Insulate the linear steam head and piping as required to prevent elevated temperatures, including within the wall cavity. Do not locate the steam head or plumbing near any materials, including wiring, devices, or products that may be adversely affected by elevated temperatures. Check with the manufacturer of materials, wiring, devices, or products for suitability for operation at elevated temperatures. Use only insulation rated for 212F or higher steam applications. Failure to follow these instructions may result in the damage or failure of materials, wiring, devices, or products. Failure to follow these instructions may result in leaks, and cause problems associated with leaks, moisture and property damage from leaks. Failure to follow these instructions may result in a hazardous condition, scalding or personal injury.

CAUTION Steambath controls feature an integral or remote temperature sensor that senses room temperature. Install the linear steam head in a location where steam emission will not come in direct contact with the control or remote temperature sensor. Failure to follow these instructions may result in poor temperature control, a hazardous condition, scalding or personal injury.

CAUTION Only use the supplied high temperature silicone sealant as required to create a permanent moisture seal. Do not seal the steam head with grout or any other material. Failure to follow these instructions may result in leaks, and cause problems associated with leaks, moisture and property damage from leaks.

CAUTION The linear steam head must be installed by a qualified and licensed plumber. Failure to use a qualified and licensed plumber may result in a leak within the wall cavity and cause problems associated with leaks, moisture and property damage from leaks. Failure to follow these instructions may result in elevated temperatures, a hazardous condition, scalding or personal injury.

CAUTION Do not use black iron, galvanized, or plastic pipe for the steam line. Use only properly rated brass pipe or copper tubing in accordance with national and local plumbing codes. Using any piping material other than properly rated brass or copper piping may cause linear steam head damage and problems associated with leaks, moisture and property damage from leaks or steam.

CAUTION Plumb rigid copper tubing or brass pipe from the steam generator to the linear steam head. Plumbing must not form traps or valleys. Failure to follow these instructions may result in leaks, and cause problems associated with leaks, moisture and property damage from leaks. Failure to follow these instructions may result in a hazardous condition, scalding or personal injury.

CAUTION Do not modify or alter the linear steam head. Do not cover, block or insert any product that is not a MrSteam supplied linear steam head accessory with the linear steam head. Failure to follow these instructions may result in a leak within the wall cavity and cause problems associated with leaks, moisture and property damage from leaks. Failure to follow these instructions may result in a hazardous condition, scalding or personal injury.

CAUTION Do not disassemble the steam head. The steam head is shipped fully assembled and requires no additional assembly. Failure to follow these instructions may result in a leak within the wall cavity and cause problems associated with leaks, moisture and property damage from leaks.

CAUTION Before installing the linear steam head, read and follow the Installation and Operation Manual(s) provided with all system components (generator, controls, accessories...etc.). If the installation and operation manuals are not available go to www.mrsteam.com for an online copy, or contact MrSteam Customer or Technical Services at 800-767-8326 or 800-727-8326 for free copies. Failure to read and follow all the Installation and Operation Manuals may result in a leak within the wall cavity and cause problems associated with leaks, moisture and property damage from leaks. Failure to follow these instructions may result in inoperable system components, a hazardous condition, scalding or personal injury.

CAUTION Consult with the manufacturer of any non-heat resistant enclosures for elevated temperatures, steam, moisture compatibility or for suitability for use with steam. Failure to follow these instructions may result in the damage or failure of materials or products. Failure to follow these instructions may result in leaks, and cause problems associated with leaks, moisture and property damage from leaks. Failure to follow these instructions may result in a hazardous condition, scalding or personal injury.

CAUTION Do not install a Linear Steam Head in an acrylic/fiberglass tub or shower enclosure. Failure to follow these directions may cause problems associated with leaks, moisture and property damage from leaks. Failure to follow these instructions may result in elevated temperatures, a hazardous condition, scalding or personal injury.

CAUTION Do not locate the steam head where steam, elevated temperatures, moisture or water can contact any products, wall surfaces, materials, door seals, devices, electronics that are not designed for use with steam, elevated temperatures, moisture or water. Failure to follow these instructions may result in damage or improper operation of the products, wall surfaces, materials, door seals, devices or electronics.

CAUTION The optional diverter reduces the steam emission zone by redirecting steam up the wall above the steam head (see page 6). Installation of the diverter may result in the following:

- Changes to the steam distribution in the room
- Increase of the temperature of the wall and devices above the steam head
- Surface condensation patterns on the walls and ceiling

Always test the diverter to insure proper safety, installation and comfort.

NOTICE Carefully inspect the Linear Steamhead and packaging for shipping damage. In the event of shipping damage, please contact the carrier for claim information. Our customer service department can assist you with product replacement.

NOTICE Do not use abrasive cleansers or chemicals to clean the linear steam head. Use only water with mild soap and a non-abrasive sponge. The use of abrasive cleansers or chemicals will damage the finish on the linear steam head.

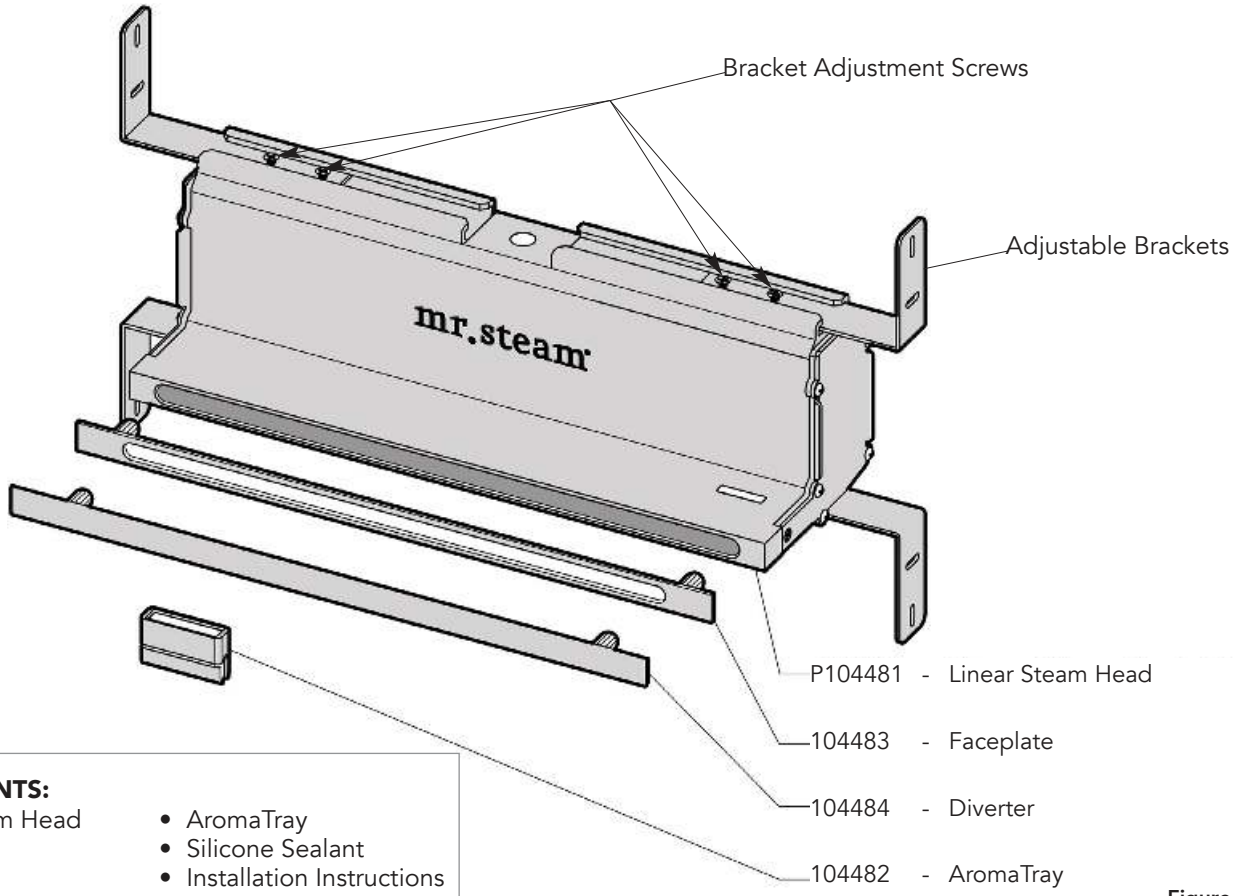

BOX CONTENTS:

- Linear Steam Head
- Faceplate
- Diverter
- AromaTray
- Silicone Sealant
- Installation Instructions

Figure 1

Dimensional Information

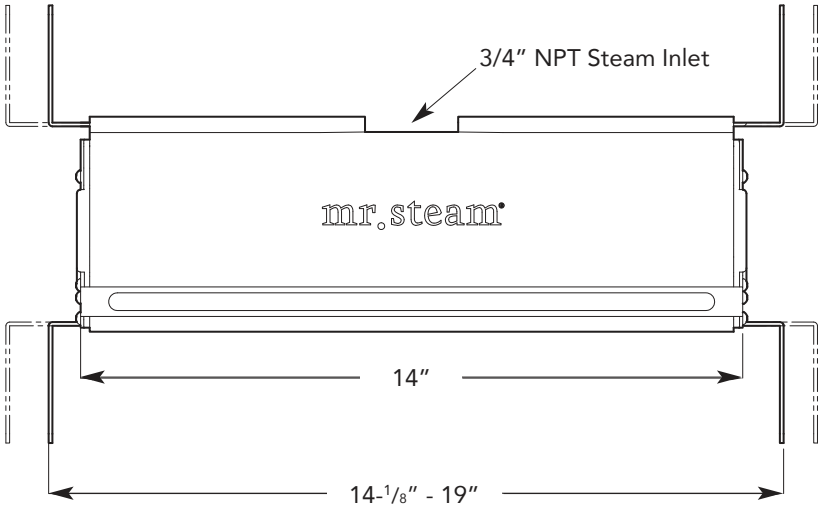

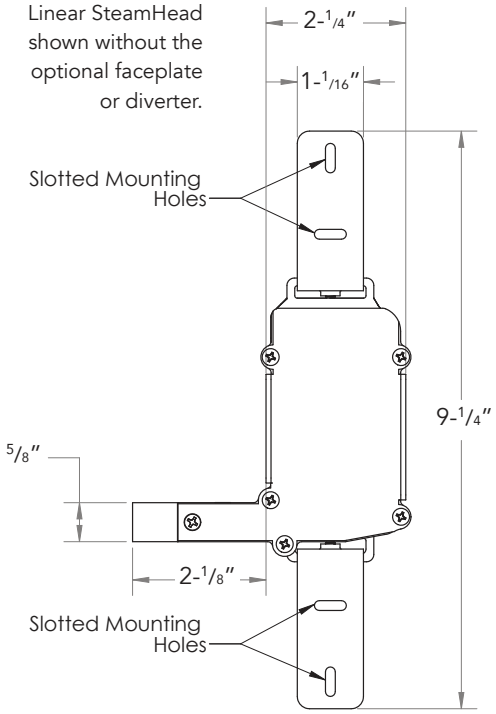

Figure 2

NOTE: ***Drawings are for illustrative purposes only.*** *Consult with qualified designer, architect or contractor for steam room construction.*

Steam Head Installation

STEP 1. Confirm proper stud spacing: The studs must have a minimum spacing of 14-1/8" and a maximum spacing 19". If the stud spacing is outside the required range then shim or otherwise reposition the studs as required.

CAUTION Installing the steam head between incorrectly spaced studs may result in damage to the steam head and result in a leak within the wall cavity and cause property damage.

STEP 2. Locate the steam head 6-12" above the finished floor. Locate the steam head where a steam bather can not come into contact with direct steam emissions. See page 6 for information on the steam emission zone.

CAUTION Steam is hot. Locate the steam head where a steam bather can not come into contact with direct steam emissions. Failure to follow these directions may result in a hazardous condition, scalding or personal injury.

STEP 3. Position the steam head between 2 properly spaced studs. Extend the adjustable brackets as required so the steam head fits snugly between two studs. Use a level to ensure the steam head is level (see Fig. 3). Tighten the eight bracket adjustment screws (supplied).

STEP 4. If the optional decorative faceplate is used, see the installation instructions for the optional faceplate on page 5. If the optional decorative faceplate is not used, position the steam head so that the steam head face will be flush with the finished wall face (see Fig. 4).

STEP 5. With the stem head properly positioned, with or without a decorative faceplate, provide eight screws as required to securely mount the steam head brackets to the studs.

CAUTION Failure to position the steam head face as instructed may result in improper steam head alignment, or a leak within the wall cavity and cause problems associated with leaks, moisture and property damage from leaks.

STEP 6. Plumb rigid copper tubing or brass pipe from the steam generator to the steam head. Use a ¾" NPT fitting appropriate for the steam piping used. Plumbing must not form traps or valleys. Thread sealant must be used as required to ensure a leak free joint between the piping and steam head.

STEP 7. Before continuing or closing the wall, test the installation, piping and steam head for leaks, traps, position, steam emission zone and for general proper installation.

CAUTION Failure to test the steam head installation may result in leaks, and cause problems associated with leaks, moisture and property damage from leaks.

Linear SteamHead shown without the optional faceplate or diverter.

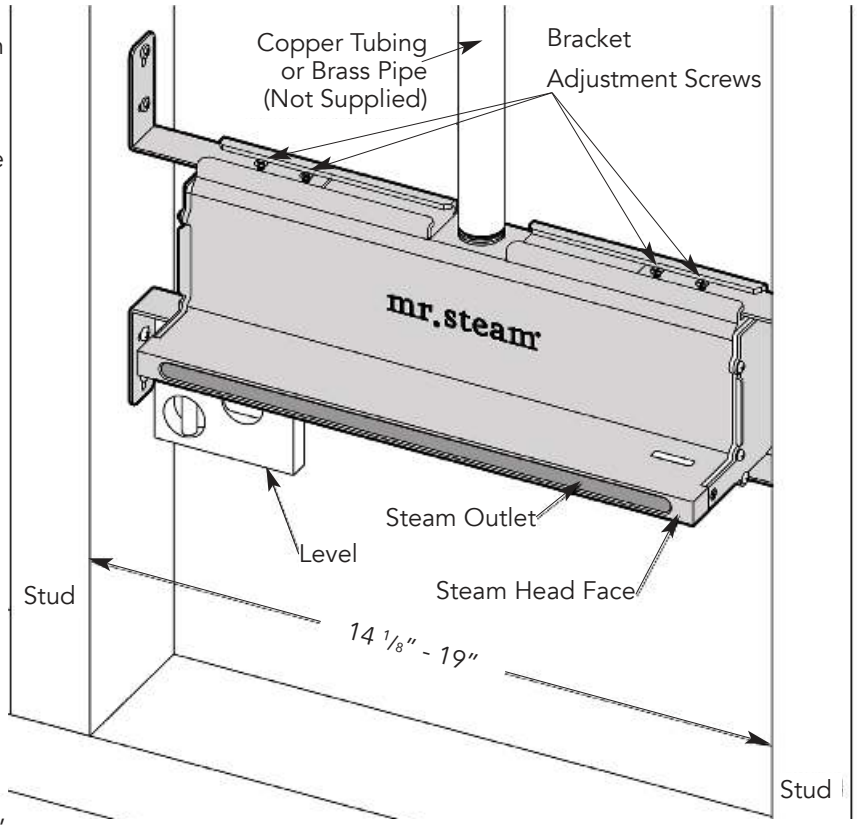

Figure 3

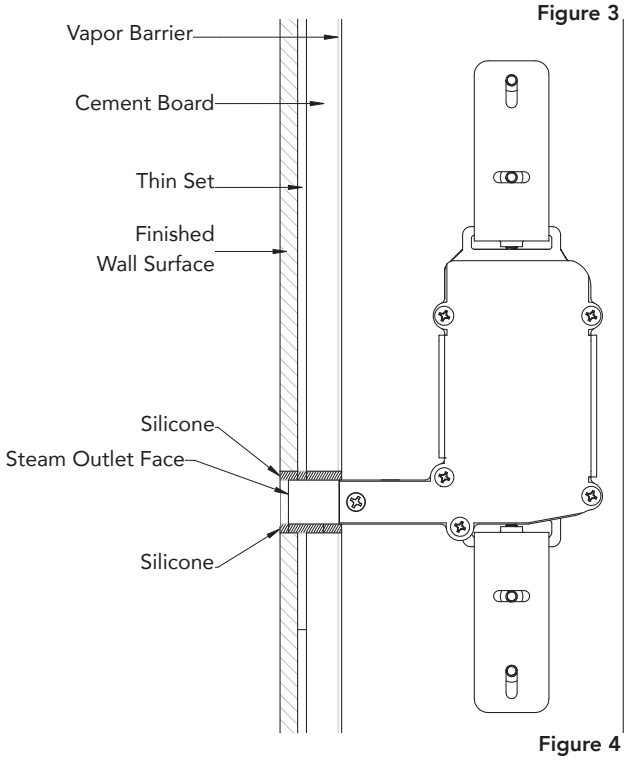

Figure 4

NOTE: ***Drawings are for illustrative purposes only.*** *Consult with qualified designer, architect or contractor for steam room construction.*

Optional Faceplate Installation

The steam head is supplied with an optional faceplate. It is not required for the functional operation of the steam head. The faceplate is a decorative accessory and is available in (8) finishes.

An optional Escutcheon (remodel plate) is available for purchase, it's larger than faceplate and is available in (8) finishes.

In **STEP 4**, instead of positioning the steam head face to be flush with the finished wall face, position the steam head so that the steam head face will be 1/8" recessed with the finished wall (see Fig. 4). This will provide clearance for the faceplate.

Apply silicone to the front of Linear Steam Head and firmly press the faceplate against the face of the steam head. Secure the faceplate as required until the silicone sets.

Return to **STEP 5** on page 4 to complete the installation.

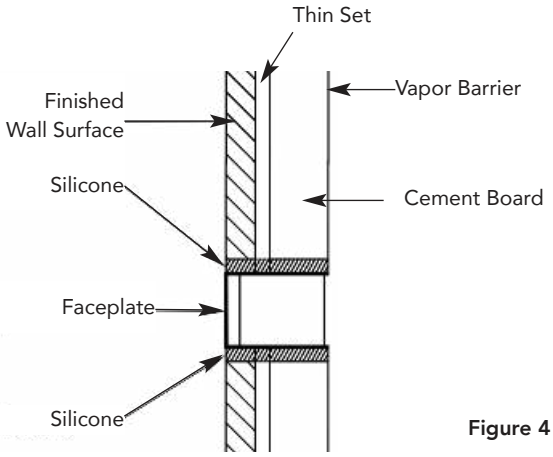

Figure 4

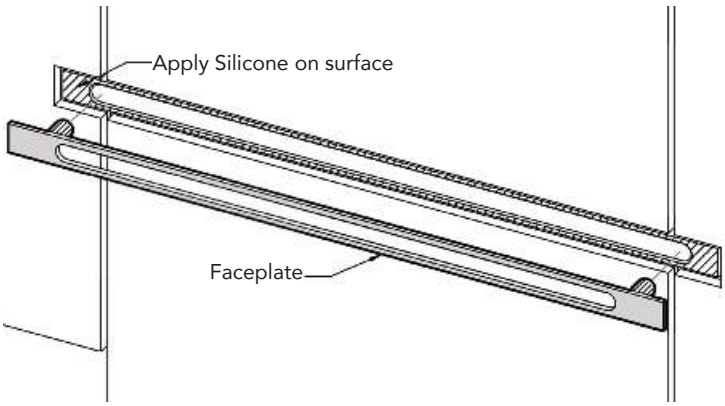

Figure 5

1. Determine the desired installation location of the control. The iSteam®, iTempo™ and iTempo/Plus™ controls are designed to be installed inside or out-side the steam room as a matter of personal prefer-ence. If the control is installed inside the steam room the control must be located:
2. 4-5 feet above the floor near the bather seating area

⚠ CAUTION

3. The control features an integral temperature sensor. Locate the control in a location representative of the desired steambathing temperatures.
   Do not locate the control above or near the steam head or direct steam emissions.
4. On a vertical wall

The control cable length is 30 feet. Insure that the control and/or steam generator are located accordingly. An optional 60 foot cable is available, PN 103990-60 for iTempo and PN 104117-60 for iSteam. Contact a MrSteam technical service representative if a 60 foot cable is required.

IMPORTANT NOTE: If the control is installed outside the steamroom a Remote Temperature Probe Part Number MSTS must be installed inside the steam room, depending on the control. Insure MrSteam steam generator is iSteam or iTempo compatible and has a serial number 900000 or higher. If iSteam is used with a generator having serial number less than 1174000, contact MrSteam technical support for an upgraded PC board.

See instructions for the MSTS Temperature Probe (located in the Control Installation Manual related to your specific control package) before rough-in or installation of control.

Steam Emission Zone

The Steam Emission Zone is the area in front of the steam head that contains dense, hot steam as it exits the steam head. Steam dissipates as it moves away from the steam head, and becomes less hot. The steam zone is the area where contact with steam presentees a scalding hazard. The steam head must be installed in a location to ensure that a steam bather will not be near the steam emission zone. The diverter reduces the steam emisson zone.

Steam Head without Optional Diverter

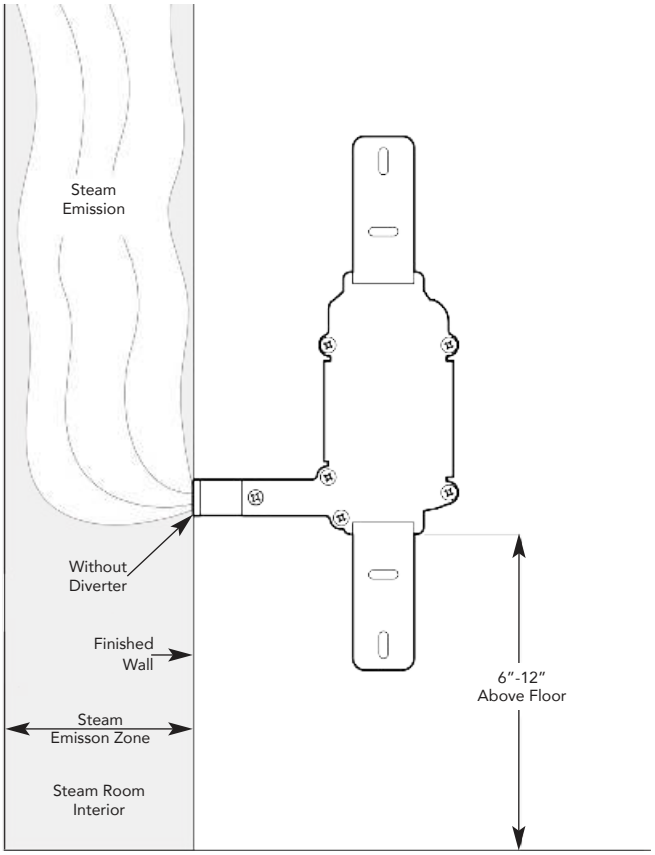

Steam Head with Optional Diverter

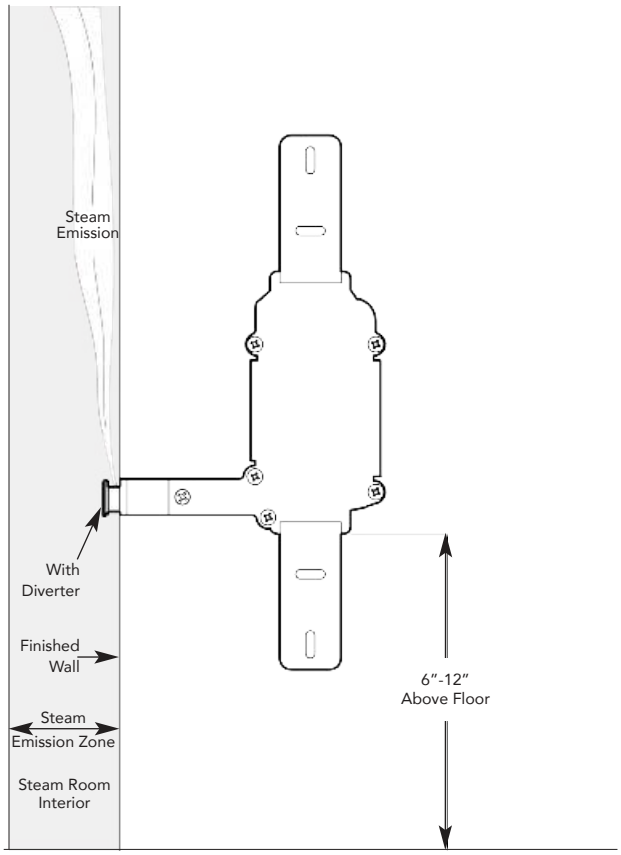

Generator Model	Minimum # of Linear Steam Heads	Steam Emission Zone with Diverter	Steam Emission Zone without Diverter
MS90-MS400 SAH3000-SAH6000	1	2”	10”
Super1-Super3	1	2”	24”
MX4-MX6	2	2”	24”

CAUTION The steam emission zone may vary with each installation. Always test the steam emission zone to insure safety.

NOTE: ***Drawings are for illustrative purposes only.*** *Consult with qualified designer, architect or contractor for steam room construction.*

Diverter

The Linear SteamHead is supplied with an optional steam diverter. The steam diverter is used to reduce the steam emission zone as required to avoid contact between a steam bather and direct steam emissions.

Supplied steam diverter does not have decorative finish. Steam diverters with decorative finish are available for purchase.

CAUTION Always use the diverter if any steam bather may come into contact with direct steam emissions. Contact MrSteam if a replacement diverter is required. Failure to use a diverter to reduce the steam emission zone as required to avoid contact between a steam bather and direct steam emissions may cause personal injury.

CAUTION Because direct steam is very hot, the diverter will be hot during the steam session, and will remain hot for a period of time after steam session. Never install, remove or adjust a diverter when the steam head is hot or if steam generator is turned on. Installing, removing or adjusting the diverter when the steam head is hot or if the steam generator is turned on may cause a burn hazard and personal injury.

CAUTION The optional diverter reduces the steam emission zone by redirecting steam up the wall above the steam head (see page 6). Installation of the diverter may result in the following:

- Changes to the steam distribution in the room
- Increase of the temperature of the wall and devices above the steam head
- Surface condensation patterns on the walls and ceiling

Always test the diverter to insure proper safety, installation and comfort.

STEP 1. Securely press the two rubber extensions into the opening of Linear Steam Head and push in firmly until the diverter is securely in place. (see Fig. 7).

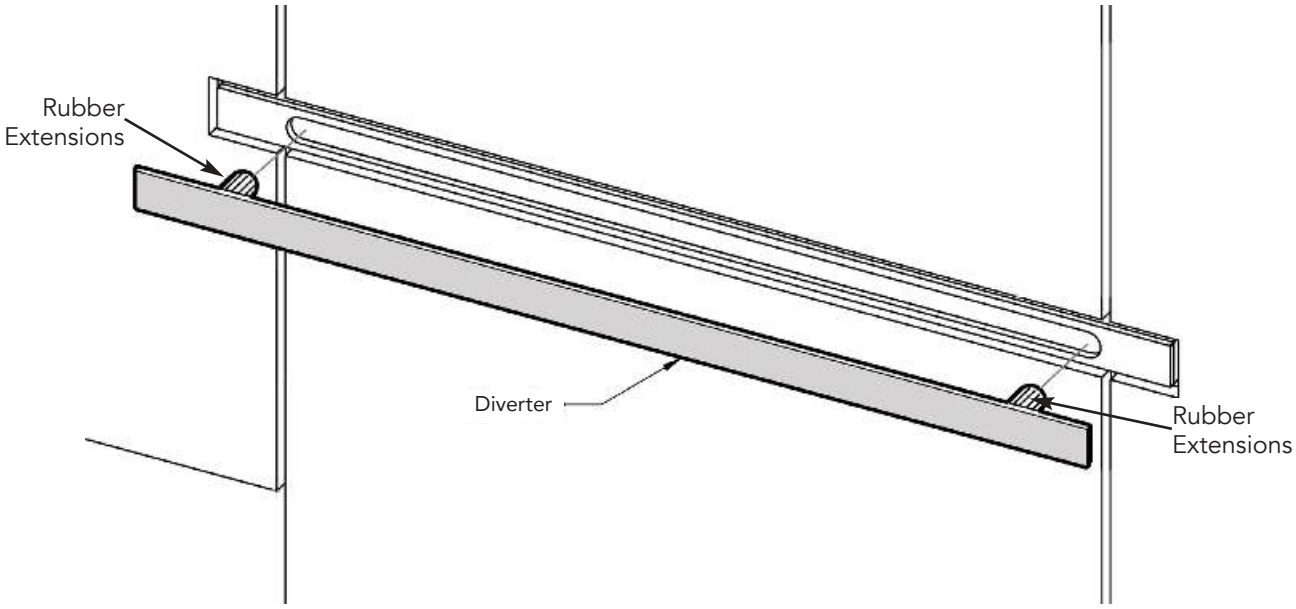

Figure 7

NOTE: ***Drawings are for illustrative purposes only.*** *Consult with qualified designer, architect or contractor for steam room construction.*

AromaTray

The AromaTray is for use with MrSteam Essential Oils. Place a few drops of Essential Oils in the AromaTray as shown to provide a fragrant steam bath experience. Read the instructions provided with the MrSteam Essential oils to insure a pleasant and safe aromatic steam bathing experience.

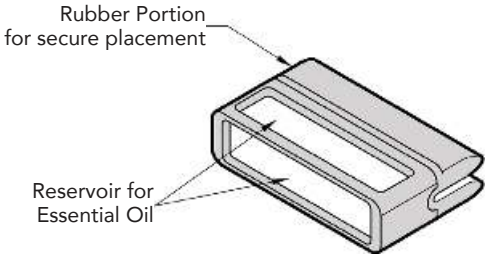

⚠ CAUTION Steam emissions, the linear steam head and AromaTray will all be hot during a steam bath session, and will remain hot for a period of time after the steam bath session. To avoid contact with the steam head and steam emissions, never install the AromaTray during a steam bath session or for a period of time after the steam bath session. Touching the AromaTray during a steam bath session, or for a period of time after the steam bath session, may result in burns, scalding or personal injury.

⚠ CAUTION Failure to first read the instructions provided with the MrSteam Essential oils may result in personal injury. If you do not have the instructions provided with the MrSteam Essential oils please call MrSteam customer or technical at 80076STEAM for a free copy, or go online at www.mrsteam.com.

AromaTray placement with the steam head or optional face plate

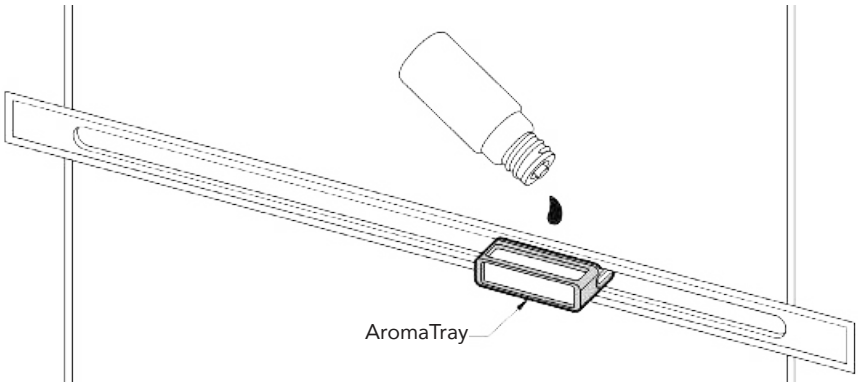

Firmly insert the rubber portion of the AromaTray into the steam outlet of Linear Steam Head with the oil reservoir facing up. Place a drop or two of AromaSteam essential oil in AromaTray. (see fig. 8)

Figure 8

AromaTray placement with the optional diverter

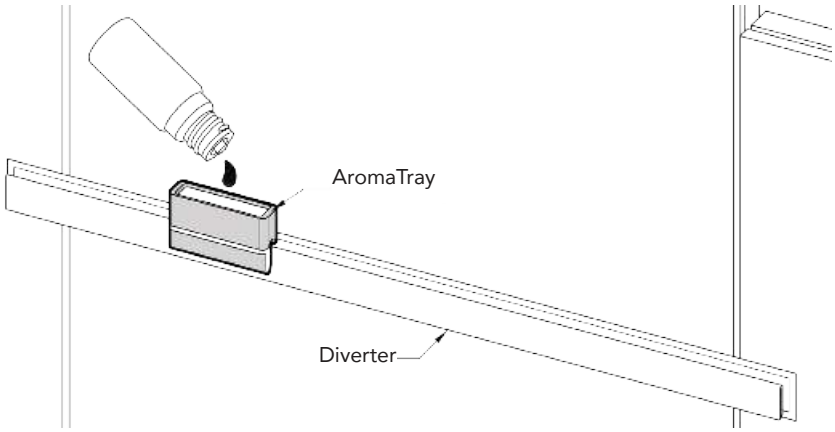

If a diverter is being used, firmly insert the rubber portion of the AromaTray onto the diverter with the oil reservoir facing up. Place a drop or two of AromaSteam essential oil in AromaTray. (see fig. 9)

Figure 9

NOTE: ***Drawings are for illustrative purposes only.*** *Consult with qualified designer, architect or contractor for steam room construction.*

Using MrSteam Essential Oils

Model 104480

Enjoy Mr.Steam essential oils by placing a drop or two, into your Mr.Steam AromaTray as shown in the illustration. Only use Mr.Steam essential oils in a Mr.Steam AromaTray. Contact a MrSteam customer or technical Service representative for essential oil Manufacturer Safety Data Sheets (MSDS).

⚠ CAUTION Start with one drop to gauge strength and suitability. Limit to a maximum of a few drops during a steambathing session.

⚠ CAUTION Use essential oils with caution. Essential oils are for external use only. Keep out of reach of children. Essential oils are highly concentrated and are potent substances and should not be applied directly to the skin as they can be irritants. Use essential oils with caution.

⚠ CAUTION Place the drops into the Mr.Steam AromaTray recess prior to turning on the steambath. Do not place drops in a hot steamhead as serious injury can result if you do not follow this warning.

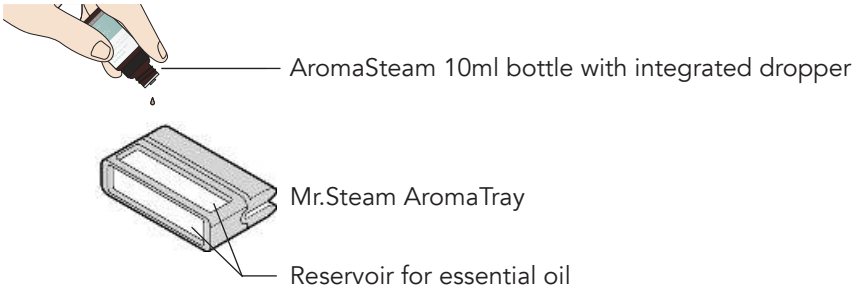

⚠ CAUTION Some people may find that the aroma makes them dizzy. In the event of dizziness, the user should exit the steambath immediately and breathe in fresh air. If skin irritation occurs stop using the oils right away. Remove any excess oil by washing in mild soap and water

⚠ CAUTION In case of contact with eyes, rinse immediately with plenty of water and seek medical advice. If ingested, rinse mouth with water. Administer water or milk to dilute. Contact a physician immediately. Tightly close containers when storing oils. Keep away from sources of ignition.

Warranty

To view or download the MrSteam Residential Generator Warranty and register your product go to: **blog.mrsteam.com/wr**

For Installation assistance please call Customer or Technical support:
East Coast 1-800-767-8326 West Coast 1-800-727-8326
To view an installation video please go to: www.mrsteam.com. This video is for added visual assistance only.
Do not install the Linear Steam Head using the video. Use only these installation instructions for a safe and problem free installation.

NOTE: ***Drawings are for illustrative purposes only.*** *Consult with qualified designer, architect or contractor for steam room construction.*

Model 104480

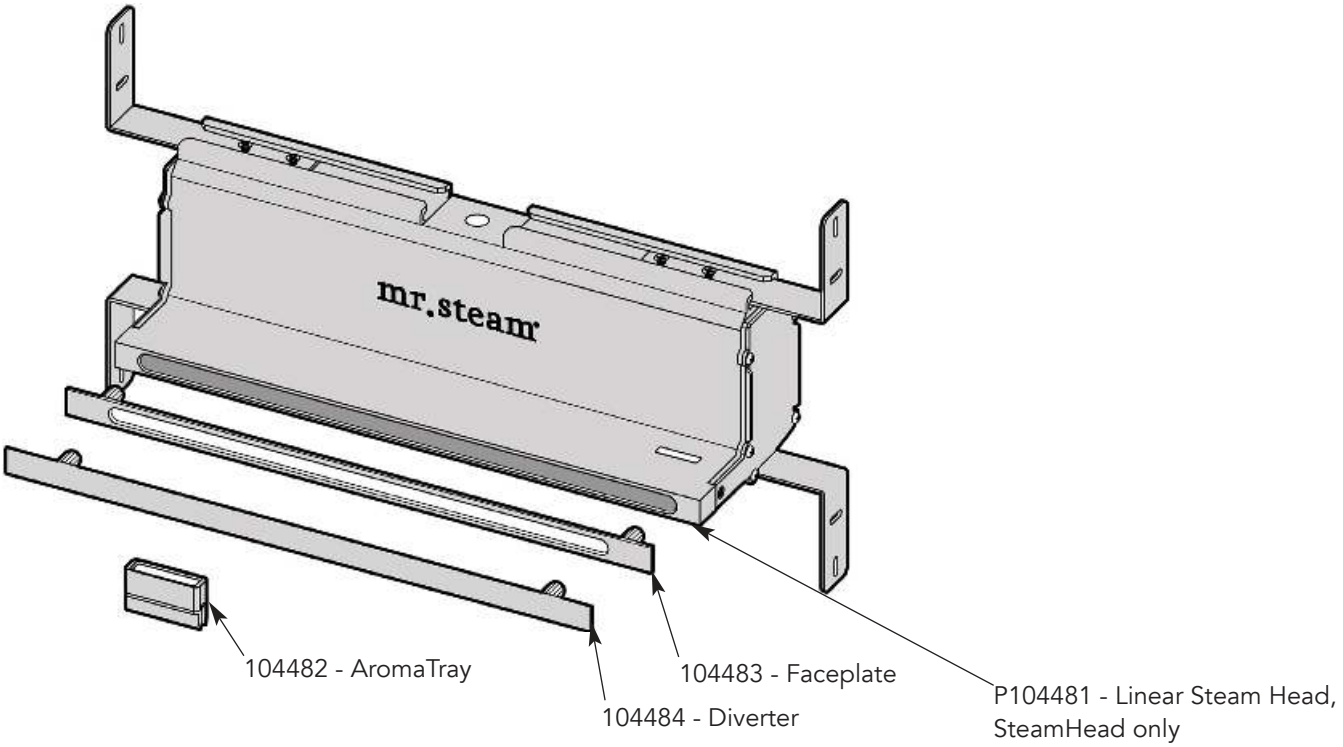

Replacement Parts

Part Number	Description
104482BB	AromaTray for LSH, Brush Bronze
104482BN	AromaTray for LSH, Brush Nickel
104482MB	AromaTray for LSH, Matte Black
104482ORB	AromaTray for LSH, Oil Rubbed Bronze
104482PB	AromaTray for LSH, Polish Brass
104482PC	AromaTray for LSH, Polish Chrome
104482PN	AromaTray for LSH, Polish Nickel
104482SB	AromaTray for LSH, Satin Brass
104483BB	LSH Faceplate Brush Bronze
104483BN	LSH Faceplate Brush Nickel
104483MB	LSH Faceplate Matte Black
104483ORB	LSH Faceplate Oil Rubbed Bronze
104483PB	LSH Faceplate Polish Brass
104483PC	LSH Faceplate Polish Chrome
104483PN	LSH Faceplate Polish Nickel
104483SB	LSH Faceplate Satin Brass

Optional Accessories

Part Number	Description
104485BB	LSH Escutcheon Brush Bronze
104485BN	LSH Escutcheon Brush Nickel
104485MB	LSH Escutcheon Matte Black
104485ORB	LSH Escutcheon Oil Rubbed Bronze
104485PB	LSH Escutcheon Polish Brass
104485PC	LSH Escutcheon Polish Chrome
104485PN	LSH Escutcheon Polish Nickel
104485SB	LSH Escutcheon Satin Brass
104486BB	LSH Diverter Brush Bronze
104486BN	LSH Diverter Brush Nickel
104486MB	LSH Diverter on Matte Black
104486ORB	LSH Diverter Oil Rubbed Bronze
104486PB	LSH Diverter Polish Brass
104486PC	LSH Diverter Polish Chrome
104486PN	LSH Diverter Polish Nickel
104486SB	LSH Diverter Satin Brass

mr.steam® hello@mrsteam.com | www.mrsteam.com

43-20 34th Street, Long Island City, NY 11101 TEL: 1 800 76 STEAM I 9410 S. La Cienega Blvd. Inglewood CA 90301 TEL: 1 800 72 STEAM

2020 © MrSteam and des., A Lifetime of Pleasure, AirTempo, AromaFlo, AudioWizard, AutoFlush, AutoSteam, Butler Package, ChromaSteam, Clean Steam...Every Time, Club Therapy, CT Day Spa, Digital 1, Express Steam, Feel Good Inc., From Bathroom to Spa, HomeWizard, iButler, iGenie, iSpa Package, iSteam, iTempo, iTempo/Plus, Linear Steamhead, Making Wellness a Way of Life, Music Therapy, My Steam, SmartSizing, Spa Package, Steam Genie, Steam on Demand, Steam in a Box, Steam@Home, SteamStart, SteamTherapy, Tala, Tala Bath & Body, Tempo, The Intelligent Steambath, Valet Package, and Virtual Spa System are registered trademarks of MrSteam.

PUR103936 Rev 05/22

Condensation Pan

103867 & 104402

Mr.Steam strongly recommends the use of a condensation pan in the unlikely event of a plumbing leak.

Locate the condensation pan on a solid level surface and place the steam generator inside the condensation pan. Insure the steam generator is level.

All plumbing shall be performed by a qualified licensed plumber and in accordance with applicable national and local codes. Check local plumbing code for receptor, trap and vent requirements. Condensation pans drain by gravity.The condensation pan is equipped with an integral 3⁄4" NPT fitting.

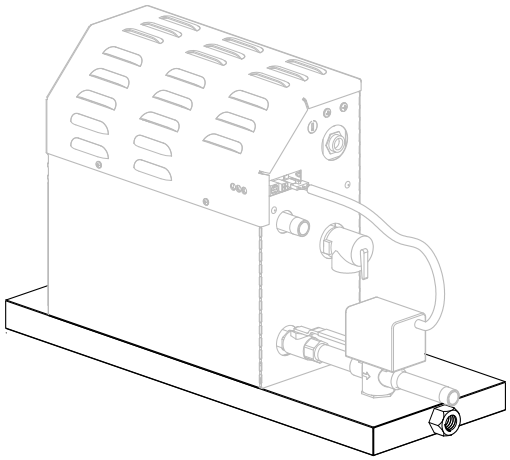

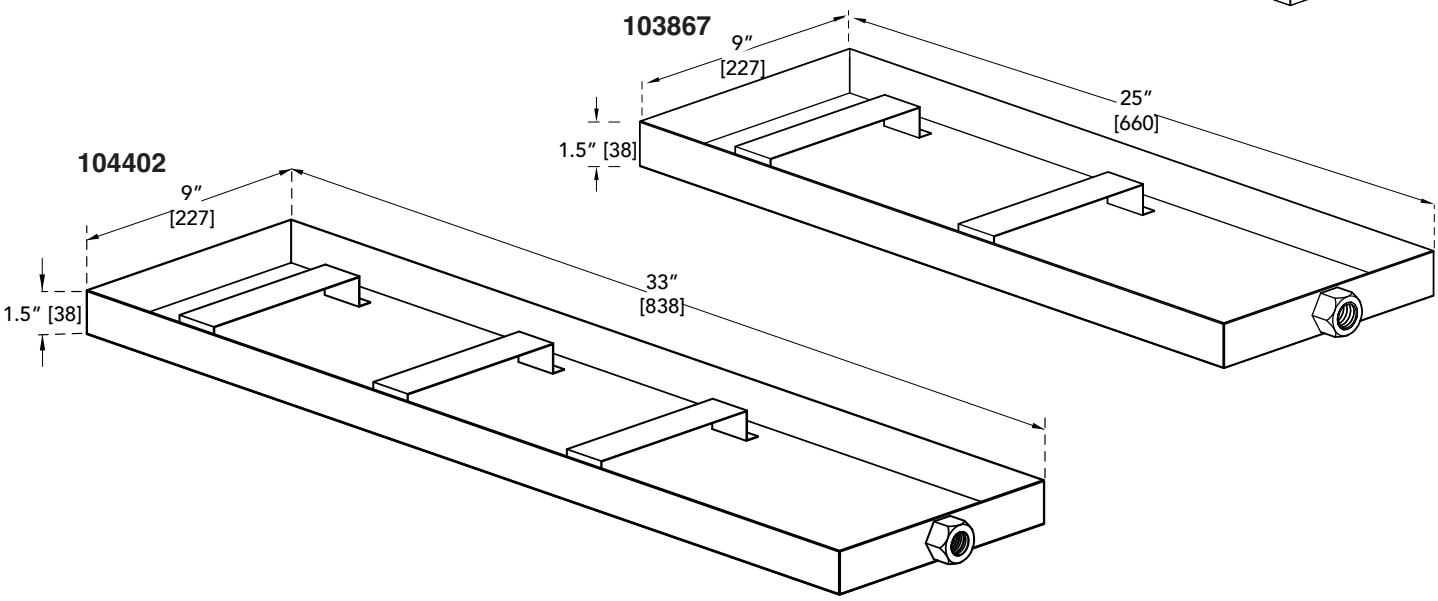

NOTE: For MX4E, MX5E and MX6E use model 104402

FOR ILLUSTRATIVE PURPOSES ONLY. **IMPORTANT NOTE: FOR SAFE AND TROUBLE FREE INSTALLATION** visit mrsteam.com before installation to download the Installation, Operation and Maintenance Manual or refer to the manual provided with the unit.

MODEL	PROJECT INFORMATION	
☐ 103867 ☐ 104402	Location:	Contractor:
	Architect:	Submitted By:
	Engineer:	Date:
Notes:		

mr.steam®

Optional AutoFlush® System

INSTALLATION INSTRUCTIONS

BOX CONTENTS:

- AutoFlush System Valve with Cord
- Installation Instructions.

ASSEMBLY OF OPTIONAL AUTOFLUSH® SYSTEM

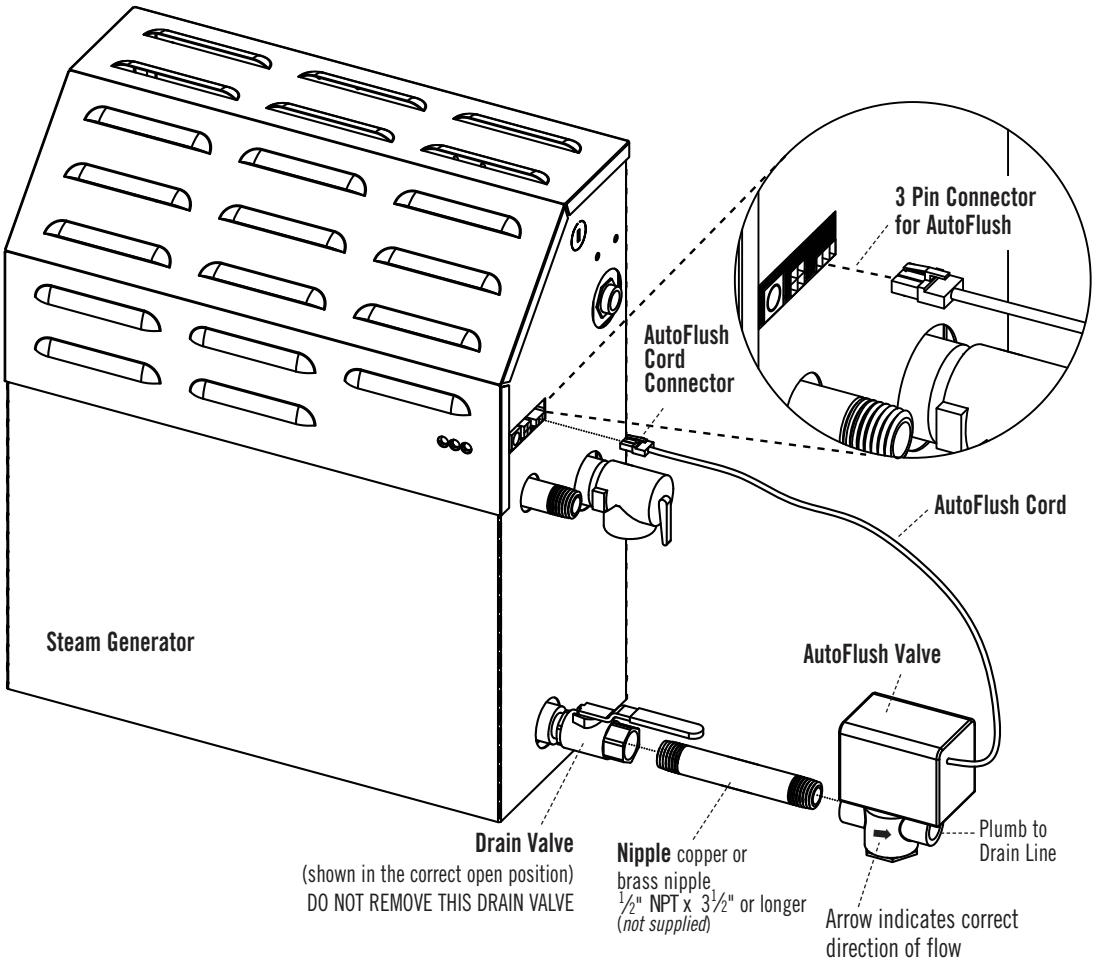

OPERATION

The optional AutoFlush System feature automatically drains the MrSteam system following each use. A time delay allows the water to cool down (about two hours) before it drains resulting in a safe and gentle operation.

mr.steam® hello@mrsteam.com • www.mrsteam.com
43-20 34th Street, Long Island City, NY 11101 1 800 76 STEAM I 9410 S. La Cienega Blvd. Inglewood CA 90301 1 800 72 STEAM

INSTALLATION INSTRUCTIONS

1. Plumbing to be performed by a qualified plumber and shall be in accordance with applicable National and Local codes. Unit drains by gravity. A drain line that is lower than the AutoFlush assembly must be available. The AutoFlush System valve outlet is threaded 1/2" NPT. Check plumbing code for receptor, trap and vent requirements.
2. Use copper or brass nipple 1/2" NPT x 31/2" (90mm) or longer (not supplied) to connect AutoFlush valve to the Drain Valve (flow direction is indicated on bottom of AutoFlush Valve).

CAUTION DO NOT REMOVE THE DRAIN VALVE
Removal may cause equipment and property damage. If there is not enough room for the valve, an elbow and a short nipple (*not provided*) can be added.

3. Open Drain Valve (handle must be aligned with brass nipple).
4. Connect the AutoFlush System cord connector to the three pin connector as shown.

WARNING Do not drain into a steam enclosure or any location where accidental contact with drain water may occur. In the event of a power failure the AutoFlush System valve will open and may discharge boiling water.

SWEAT FITTINGS

When using sweat fittings use only tin base solder with a melting point below 600 degrees F. Do not overheat. Ends of water supply tubing must be thoroughly clean for a minimum distance of 1" from ends. Do not remove valve cover.

TO CHECK OPERATION

1. Turn on MrSteam with the control and allow tank to fill with water. (see MrSteam Instruction Manual)
2. Turn off MrSteam with the control. Water should stay in tank.
3. Turn off power at the panel box. Water should discharge from tank.
4. Turn on power at panel box.
5. Repeat

CAUTION PROVIDE DRAIN PLUMBING ACCORDING TO LOCAL CODES. PLUMB AS REQUIRED FOR AUTOFLUSH SYSTEM.

AutoFlush® Shown Fully Assembled

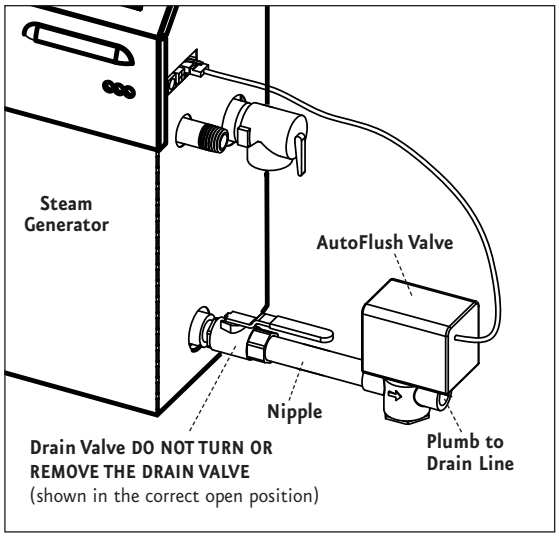

Installing AutoFlush on Older Model Generators SN:899,999 and below

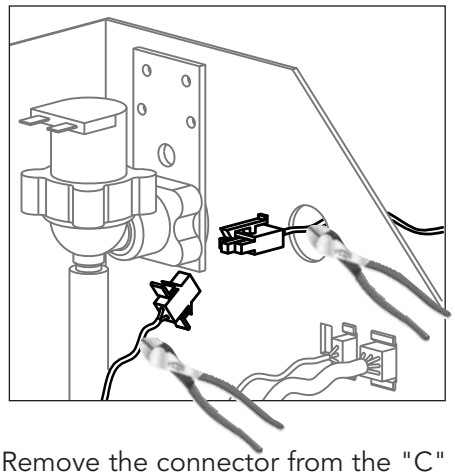

1. Remove the connector from the "C" location in the jacket. Cut off the connector where shown and strip back the wires approx 0.375"
2. Cut the connector off the AutoFlush cable where shown and strip back the wires approx 0.375".
3. Remove the knockout in the side of the generator and install a bushing to prevent chafing.
4. Route the wires from the AutoFlush through the knockouts and connect the white wire from the AutoFlush to the white wire from the circuit board using a wire nut. Repeat for the black wire.

IMPORTANT NOTE: Contact the MrSteam Technical Service Dept. for installation of any equipment not shown in these instructions. East Coast: 800-767-8326; West Coast: 800-727-8326

WARRANTY: To view or download the MrSteam Controls & Accessories Warranty and register your product go to: **blog.mrsteam.com/wr**