Installation, Operation and Maintenance Manual

Butler Flex Package

mr.steam® | Feel Good Inc.

Installation, Operation and Maintenance Manual

TempoFlex

IMPORTANT: Leave this material with the home owner.

mr.steam® | Feel Good Inc.®

READ ME FIRST!

⚠ WARNING As you follow these instructions, you will notice warning and caution symbols. This blocked information is important for the safe and efficient installation and operation of this generator. These are types of potential hazards that may occur during installation and operation:

⚠ WARNING Indicates a potentially hazardous situation, which, if not avoided, could result in death or serious injury.

⚠ CAUTION Indicates a potentially hazardous situation, which, if not avoided may result in minor or moderate injury or product damage.

NOTICE is used to address practices not related to physical injury.

IMPORTANT NOTE: This highlights information that is especially relevant to a problem-free installation.

All information in these instructions is based on the latest product information available at the time of publication. MrSteam reserves the right to make changes at any time without notice. More current instructions may be available at www.mrsteam.com.

When installing and using this electrical equipment, basic safety precautions should always be followed, including the following:

IMPORTANT SAFETY INSTRUCTIONS

1. READ AND FOLLOW ALL INSTRUCTIONS

2. ⚠ WARNING
Supervise children at all times.

3. ⚠ WARNING Steam is hot and can cause injury or death if improperly used. Steam rooms contain steam and elevated temperatures. Please read and observe all warnings in this manual before installing or using a steam room.

4. ⚠ WARNING
To reduce the risk of injury:
A. The wet surfaces of steam enclosures may be slippery. Use care when entering or leaving.
B. The steam head is hot. **DO NOT** touch the steam head and avoid the steam near the steam head.
C. Prolonged use of the steam system can raise excessively the internal human body temperature and impair the body's ability to regulate its internal temperature (hyperthermia). Limit your use of steam to 10-15 minutes until you are certain of your body's reaction.
D. Excessive temperatures have a high potential for causing fetal damage during the early months of pregnancy. Pregnancy or possibly pregnant women should consult a physician regarding correct exposure.
E. Obese persons and persons with a history of heart disease, low or high blood pressure, circulatory system problems, or diabetes should consult a physician before using a steambath.
F. Persons using medication should consult a physician before using a steambath since some medication may induce drowsiness while other medications may affect heart rate, blood pressure and circulation.

SAVE THESE INSTRUCTIONS

⚠ WARNING

REDUCE THE RISK OF OVERHEATING AND SCALDING

1. EXIT IMMEDIATELY IF UNCOMFORTABLE, DIZZY OR SLEEPY. STAYING TOO LONG IN A HEATED AREA IS CAPABLE OF CAUSING OVERHEATING.
2. SUPERVISE CHILDREN AT ALL TIMES.
3. CHECK WITH A DOCTOR BEFORE USE IF PREGNANT, DIABETIC, IN POOR HEALTH OR UNDER MEDICAL CARE.
4. BREATHING HEATED AIR IN CONJUNCTION WITH CONSUMPTION OF ALCOHOL, DRUGS, OR MEDICATION IS CAPABLE OF CAUSING UNCONSCIOUSNESS.
5. DO NOT CONTACT STEAM HEAD OR STEAM AT THE STEAM HEAD.

REDUCE THE RISK OF SLIPPING AND FALL INJURY

1. USE CARE WHEN ENTERING OR EXITING THE STEAM ROOM. FLOOR MAY BE SLIPPERY

NOTE: FOR ADDITIONAL SAFETY CONSIDERATIONS SEE OWNER'S MANUAL WHICH IS KEPT:_____
THE OWNER'S MANUAL CAN BE FOUND AT WWW.MRSTEAM.COM

USE OF STEAM ROOM IN CONJUNCTION WITH CONSUMPTION OF ALCOHOL CAN BE DANGEROUS AND CAN RESULT IN INJURY THROUGH SLIP AND FALL OR OTHERWISE.

mr.steam 43-20 34th Street , Long Island City, NY 11101 • 1 800 76 STEAM • www.mrsteam.com

PUR100378 5.22

HYPERTHERMIA occurs when the internal temperature of the body reaches a level several degrees above the normal body temperature of 98.6° **F.** The symptoms of hyperthermia include an increase in the internal temperature of the body, dizziness, lethargy, drowsiness, and fainting. The effects of hyperthermia include:
a) Failure to perceive heat;
b) Failure to recognize the need to exit the steambath;
c) Unawareness of impending risk;
d) Fetal damage in pregnant women;
e) Physical inability to exit the steambath and
f) Unconsciousness.

⚠ WARNING The use of alcohol, drugs, or medication can greatly increase the risk of hyperthermia

⚠ WARNING The peel and stick warning label is an essential part of providing a safe environment for steam room users. The peel and stick warning label is supplied with the instruction manual provided with the steam generator and must be applied to the wall of the shower or steam enclosure, at a point that is visible to all users. Failure to install this sticker may result in serious injury or death.

TABLE OF CONTENTS

Important Safety Instructions 1
Before Installing 3
Dimensional Information 4
General Installation Guidelines 5
Installation Instructions for Tempoflex 6
Wireless Installation 7-8
Wireless Receiver 9
TempoFlex Operating Instructions 10
User Prests 11
Charging 12
System Status Codes 12

BEFORE INSTALLING

Carefully inspect the control and packaging for shipping damage. In the event of shipping damage, please contact the carrier for claim information. Our customer service department can assist you with any missing or damaged parts.

⚠ **CAUTION** To avoid unintentional steambath operation, **DO NOT** locate the control where other controls, accessories, shower heads, valves, body sprays or similar within the shower could cause confusion or interfere with the MrSteam control's intended use and function.
o not use any MrSteam equipment without reading and understanding the respective Installation and Operation Manual and MrSteam steam generator Installation and Operation Manual. Failure to read and understand these instructions may result in an inoperative or hazardous installation.

⚠ **WARNING** A peel and stick warning sticker is provided in the MrSteam steam generator Installation, Operation and Maintenance Manual. This manual is provided with every steam generator. The warning sticker must be read and permanently affixed in a conspicuous location near the steam room. Failure to read and affix this warning sticker in a conspicuous location may result in serious injury or death. Please call MrSteam at 800 767-8326 for a free replacement or if you have any questions regarding the warning sticker.
Install the MrSteam steambath controls controls according to installation instructions. Failure to install according to instructions will result in an inoperative control or hazardous overheating or inadequate heating of the steam room. If a MrSteam steambath control is installed outside the steam room a Remote Temperature Probe (PN MSTS) must be installed inside the steam room per instructions for the Remote Temperature Probe. Failure to install according to instructions will result in an inoperative control and overheating of the steam room

⚠ **CAUTION** MrSteam steambath control wiring inside conduit together with power lines or close to hot water or steam piping. Doing so may result in an inoperative or hazardous installation.

⚠ **WARNING** **DO NOT** alter or modify any MrSteam product. Doing so may result in an inoperative or hazardous installation and will void the warranty.

IMPORTANT NOTES:

- Turn power to the steam generator **OFF** before connecting the control to the generator. Failure to turn the power off will result in an inoperable control.
- **DO NOT** operate MrSteam steambath controls with anything other than a MrSteam steambath generator compatible with the control. MrSteam residential steam generators with serial numbers lower than 1174000, or any other brand of steam generator are not to be operated with TempoFlex controls. Doing so may result in an inoperative installation.
- This document contains important safety, operation and maintenance information. Leave this document with the homeowner. **DO NOT** discard this document.
- Discontinue use of the steam generator or control if the steam generator is damaged or otherwise not functioning properly. Doing so may result in an inoperative or hazardous installation.
- All drawings are for illustrative purposes only.

DIMENSIONAL INFORMATION FOR TEMPOFLEX

BOX CONTENTS:
- TempoFlex Control
- Decorative Trim
- Control Cable (3')
- Wireless Receiver
- Power Supply
- Power Cord (30')
- Mounting Screws (2)
- Steamhead
- Tube of Silicone Sealant
- Surface Mount Bayonet
- Installation Manual

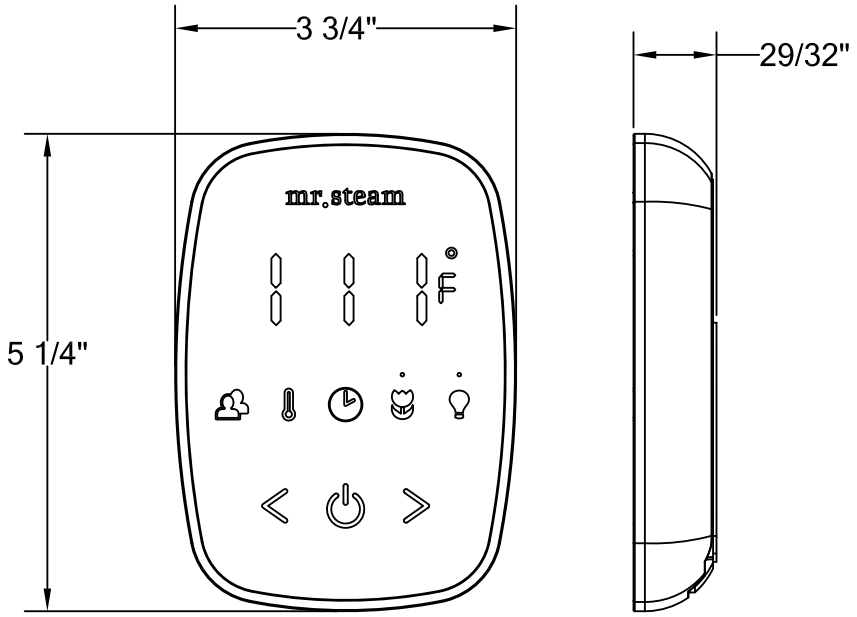

TempoFlex
(shown with decorative Trim)

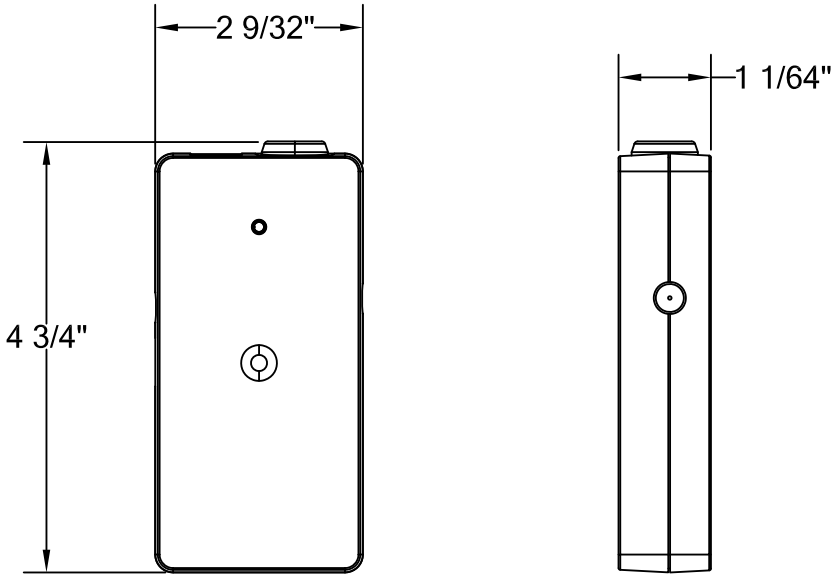

Wireless Receiver

All drawing are for illustrative purposes only

GENERAL INSTALLATION GUIDELINES

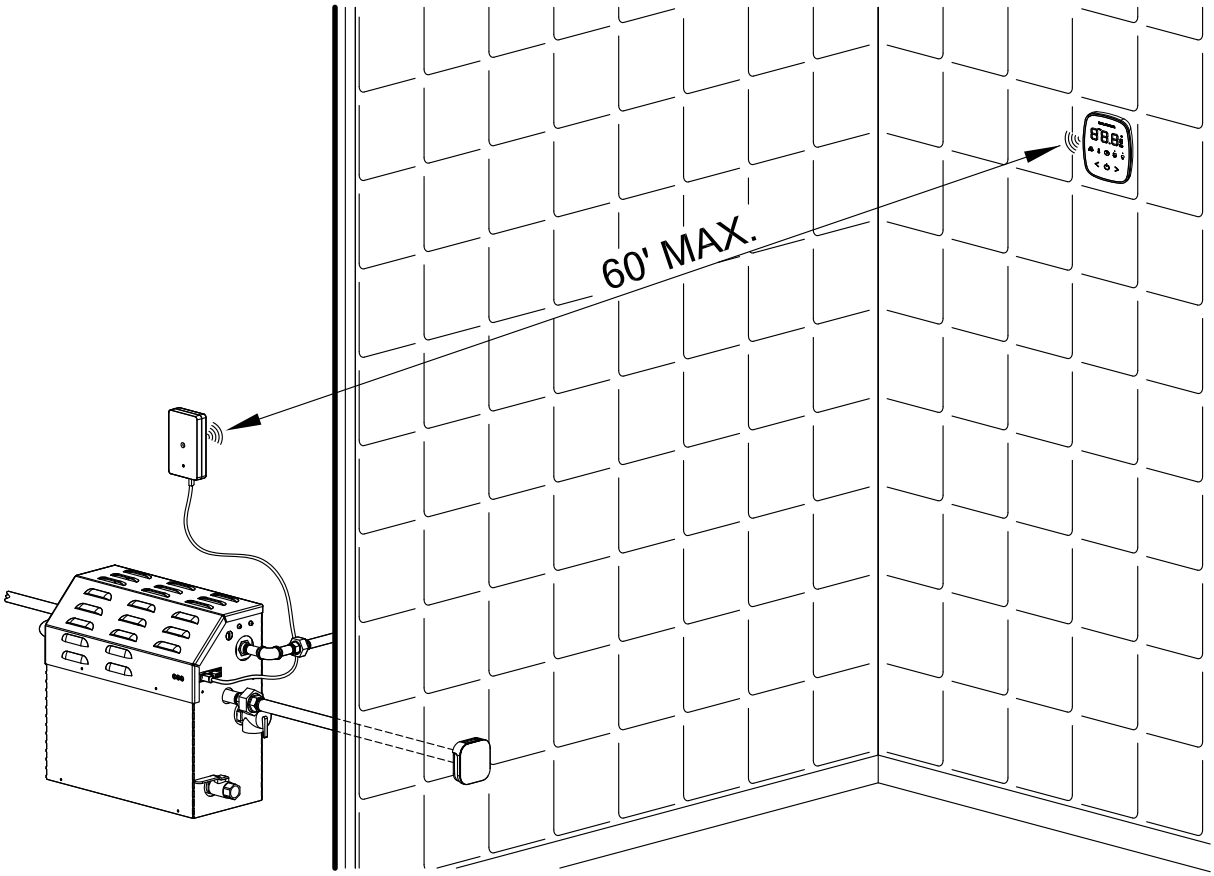

CAUTION The control features an integral temperature sensor. Locate the control in a location representative of the desired steam bathing temperature. **DO NOT** locate the control above or near the steam head or direct steam emissions. The ideal location for the control is on a wall opposite the steam head.

NOTICE To avoid unintentional steambath operation, **DO NOT** locate the control where other controls, accessories, shower heads, valves, body sprays or similar within the shower could cause confusion or interfere with the MrSteam control's intended use and function

If the control is installed outside the steam room a Remote Temperature Probe part number MSTS must be installed inside the steam room.

All drawing are for illustrative purposes only

INSTALLATION INSTRUCTIONS FOR TEMPOFLEX

IMPORTANT NOTE:
TempoFlex can be installed completely wireless, or with a power wire from the generator. Follow the instructions according to your preferred installation.

STEP 1
Determine the desired installation location of the control. The TempoFlex controls are designed to be installed inside or outside the steam room as a matter of personal preference. If the control is installed outside the steam room a Remote Temperature Probe part number MSTS must be installed inside the steam room.

NOTICE See installation instructions for the MSTS Temperature Probe before rough-in or installation of control. If the control is installed inside the steam room the control must be located:
- 4-5 feet above the floor near the bather seating area.
- On a vertical wall
- Mounting surface should be clean and dry

The control features an integral temperature sensor. Locate the control in a location representative of the desired steam bathing temperatures. **DO NOT** locate the control above or near the steam head or direct steam emissions. Locating the controls near the steamhead or near direct steam emissions may result in poor steam room temperature control.

NOTICE **DO NOT** mount on grout/caulk lines.
The control can be located up to 60 feet from the wireless receiver. Construction materials affect the communication between the control and receiver. Test the range of the TempoFlex. It may be necessary to change the location of the wireless receiver to improve the range.

Water supply and steam piping must be flushed to remove flux and other debris prior to connecting the steam generator. Failure to flush the steam piping may result in flux poisoning or a hazardous condition. Failure to flush the steam piping may result in blockage or an inoperable system.

All drawing are for illustrative purposes only

WIRELESS INSTALLATION INSTRUCTIONS FOR TEMPOFLEX

IMPORTANT NOTE:
TempoFlex can be installed completely wireless, or with a power wire from the generator. Follow the instructions according to your preferred installation.

STEP 2 – WIRELESS INSTALLATION

2A. Remove the mounting bayonet from the back of the TempoFlex Control.
2B. Remove and discard the release paper to expose the adhesive liner.
2C. Ensure the mounting surface is clean & dry.
2D. Place the bayonet on the wall in the desired location.
2E. Wait 15 minutes before placing the control on the bayonet. To ensure the adhesive is secured.

NOTICE Use the screw and anchor to secure the bayonet to the wall as required for rough or uneven wall surfaces. The surface mount bayonet supports the weight of the TempoFlex control.

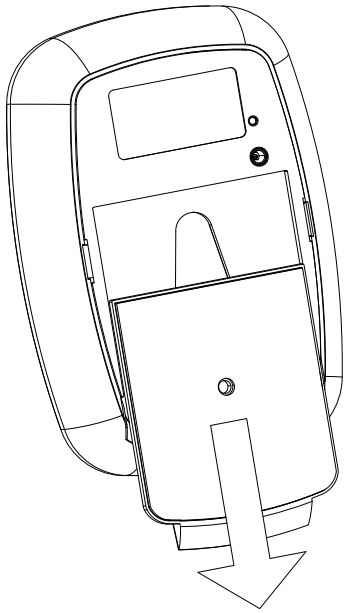

Wireless Figure 2a

WIRED INSTALLATION INSTRUCTIONS FOR TEMPOFLEX

IMPORTANT NOTE:
The wire provides power for the control, the communication is still wireless.

STEP 2 – WIRELESS INSTALLATION
IMPORTANT NOTE: TempoFlex controls are paired from the factory, ensure the
control and wireless receiver are paired **BEFORE** attaching to wall.

2A. Determine the center of where the control shall be located.
2B. Drill a 3/8" diameter hole in the tile as shown and route the power cord from the wireless receiver to the steam room
2C. Plug the power cord into the back of the Tempo Flex
2D. Apply silicone around the power cord connector, such that when it is pushed into the hole it will create a seal
2E. Ensure the mounting surface is clean and dry.
2F. Remove and discard the release paper to expose the sdhesive liner.
2G. Place the TempoFlex on the wall in the desired location

NOTICE Use masking tape to support the control while the Silicone cures.

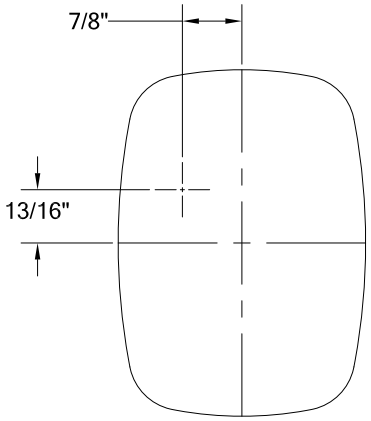

Wired Figure 2b

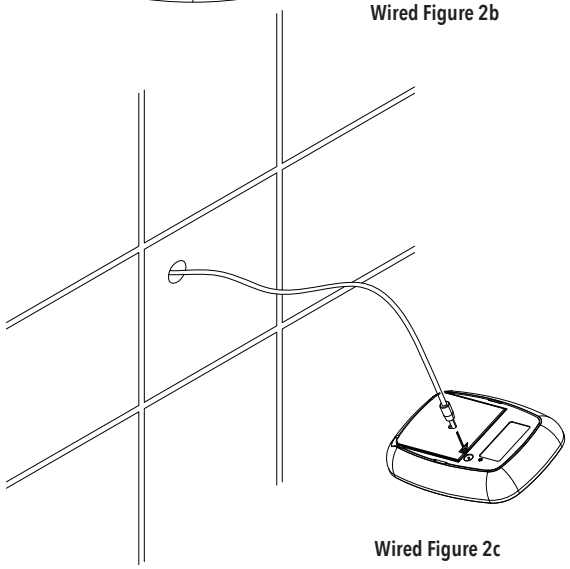

Wired Figure 2c

All drawing are for illustrative purposes only

WIRED INSTALLATION INSTRUCTIONS FOR TEMPOFLEX (CONT.)

IMPORTANT NOTE:
The wire provides power for the control, the communication is still wireless.

STEP 3 – WIRED INSTALLATION

IMPORTANT NOTE:
TempoFlex controls are paired from the factory, ensure the control and wireless receiver are paired **BEFORE** attaching to wall.

3A. Plug the other end of the power cable into EITHER side of the wireless receiver which is connected to the steam generator.
3B. Plug the power supply cable into the connector on the opposite side of the wireless receiver from the power cable.
3C. Plug the power supply into a 120 volt outlet.

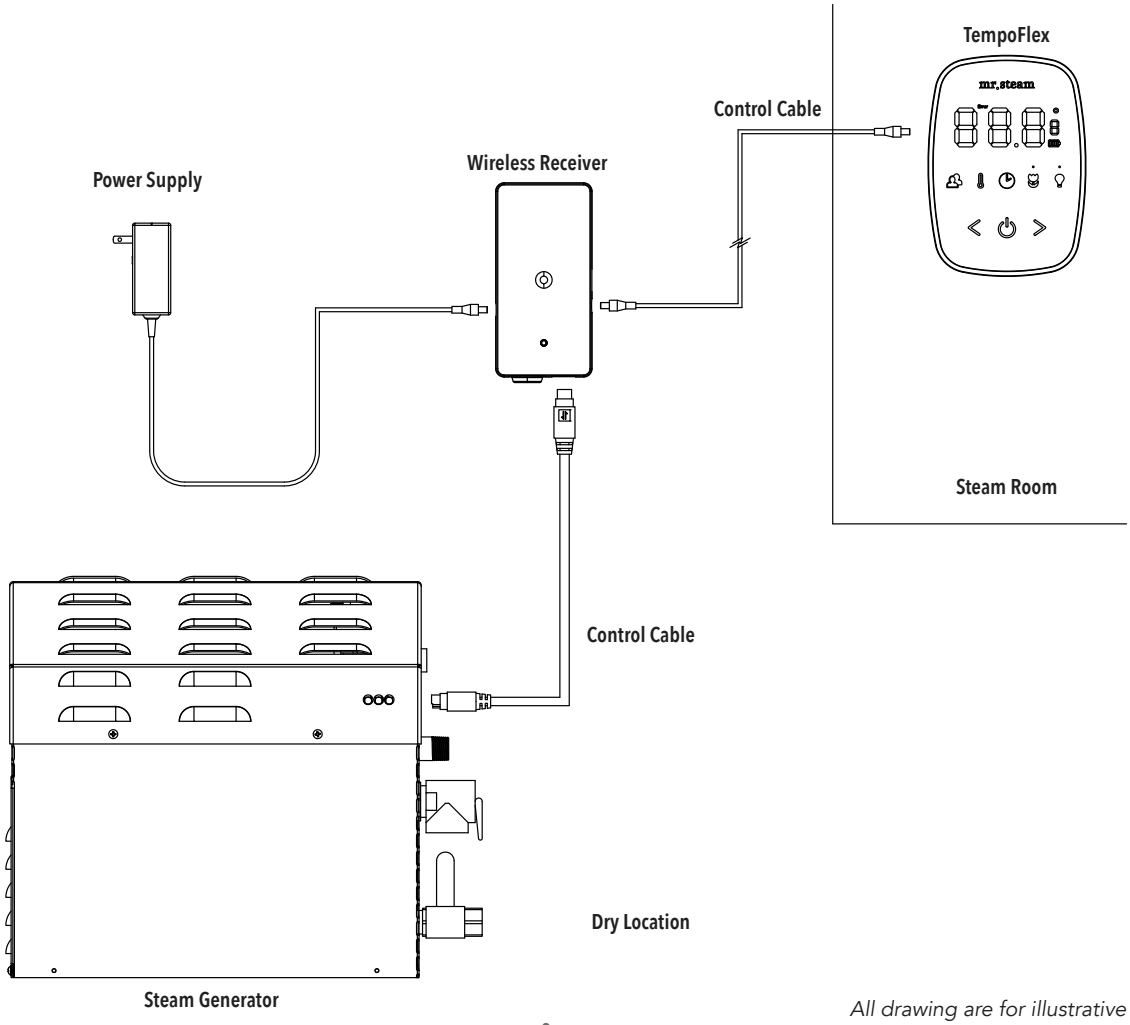

All drawing are for illustrative purposes only

WIRELESS RECEIVER INSTALLATION

The control can be located up to 60 feet from the wireless receiver. Construction materials may affect the communication between the control and the receiver. Test the range of the TempoFlex. It may be necessary to change the location of the wireless receiver to improve the range. Contact MrSteam technical service for an optional 30 or 60 foot cable.

Using the 3 foot cable provided, plug one end into the steam bath generator and the other end into the TempoFlex wireless receiver

NOTICE The generator shall not be powered when the wireless receiver is plugged into it.

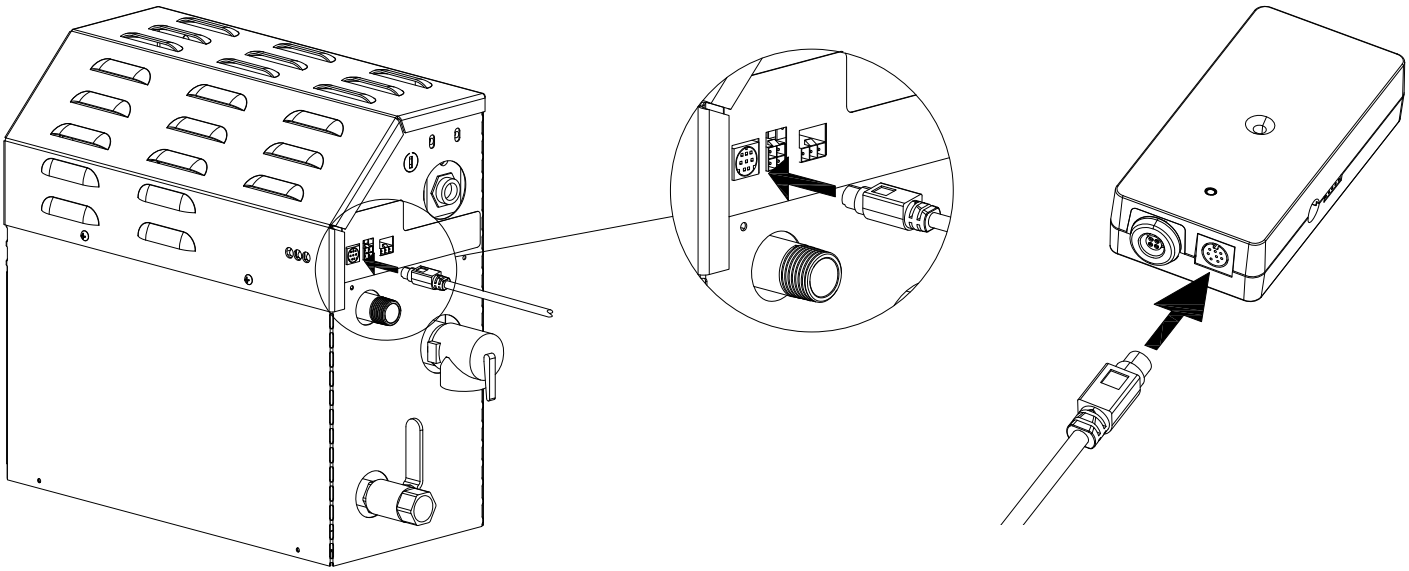

Attach the dongle on a wall adjacent to the steam generator using the screw provided.

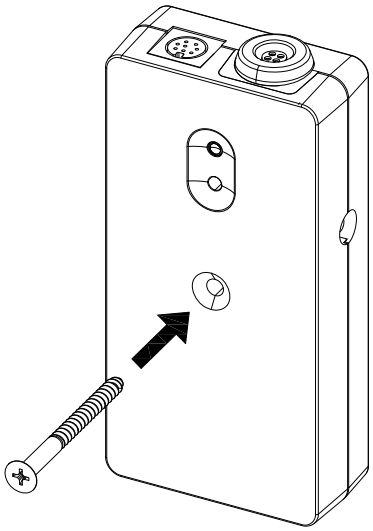

NOTICE Do not rest the wireless receiver on the steam generator, The metal case of the generator may shield the wireless signal.

CHROMAX
If installing the optional ChromaSteamX lighting system, follow the Instructions provided with the ChromaSteamX.

Plug the ChromaSteamX communication cable into the grey connector on the TempoFlex wireless receiver

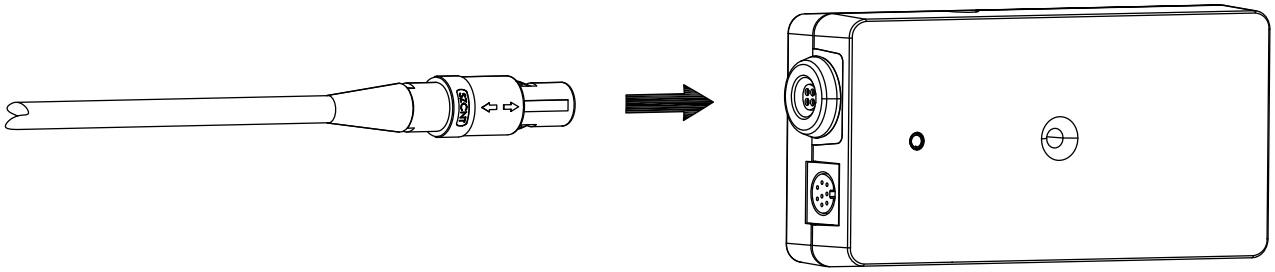

All drawing are for illustrative purposes only

TEMPOFLEX OPERATING INSTUCTIONS

The TempoFlex features programmable temperature control, steam bath duration, AromaSteam **ON/OFF**, ChromaX control and two personal settings.

WARNING Set the steam bathing temperature according to personal preference, however it is highly recommended to begin steam bathing at a low temperature setting for a very short duration to gauge comfort and safety levels

The LCD will be **OFF** until a button is pressed. The LCD remains lit for 10 seconds after the last button is pressed. When the steam generator turns **OFF** the display will turn on and read **OFF**. While the generator is steaming the LED above AROMA and CHROMA will alternately flash every 2 seconds.

ON/OFF

DIAGRAM 1

Press the **ON/OFF** key for second to start the flow of steam. The temperature set point is displayed. Steam will begin to flow 5 – 7 minutes after the control is turned **ON**. The duration required for the steam room to reach steam bathing temperatures depends on the steam room construction and steam generator specifications. To stop the flow of steam before time expires press the **ON/OFF** key. Steam may continue to flow for a short time after the control is turned **OFF**.

Diagram 1

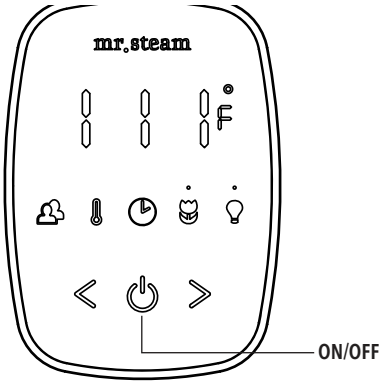

SETTING THE STEAMBATH DURATION

DIAGRAM 2

Press **TIME** key to set or display the steambath duration. The default time setting is 20 minutes. With the time displayed, press the **LEFT** or **RIGHT** arrows to set the desired duration time (2-60 minutes) in two minute increments.

Diagram 2

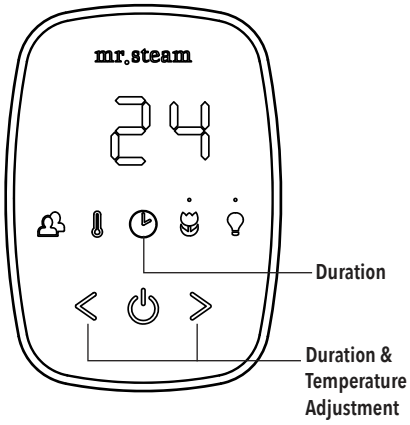

SETTING THE TEMPERATURE

DIAGRAM 3

Press **TEMP** key to set the desired temperature or display the temperature setting. The default temperature setting is 110 *F. With the temperature dislayed, press the **LEFT** or **RIGHT** arrows to set the desired temperature in one degree increments. Set the steam bathing temperature according to personal preference, however it is highly recommended to begin steam bathing at a low temperature setting for a very short duration to gauge comfort and safety levels

Diagram 3

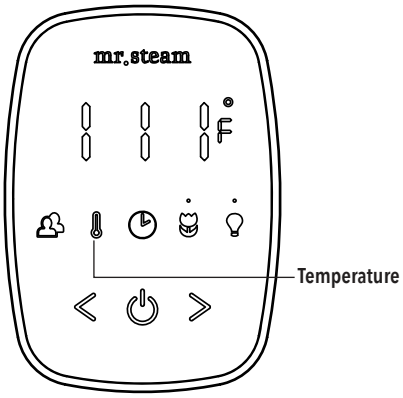

All drawing are for illustrative purposes only

USER PRESETS

DIAGRAM 4

Use the user button to store preferred settings.

To program preferred settings:

Turn the steambath **ON**. Press the user button once to program Pr1, twice to program Pr2
Enter the preferred time and temperature settings.
To select program 1 press the user button, Pr1 will be displayed, Press it twice to select program 2, Pr2 will be displayed. The Steambath will operate at the stored settings.

Diagram 4

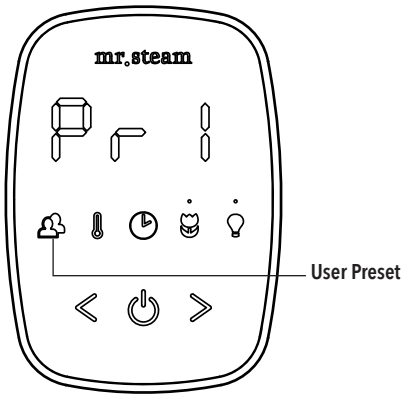

AROMASTEAM

The AromaSteam is an optional accessory that automatically injects aromatic oil into the steam. With the steambath **ON**, press the AROMA button. The AromaSteam will turn on and the **LED** above the AROMA button will turn **ON**. Press the AROMA button to turn AromaSteam off during a steam session. AromaSteam will automatically turn off when the steam generator stops heating. To conserve battery life the **LED** will only be lit when the display is **ON**

CHROMAX

The ChromaX is an optional accessory that provides colored light in the steam room. Press the CHROMA button to turn the light **ON**. When the ChromaX is on, momentarily press the CHROMA button to change the color of the ChromaX. A long press on the CHROMA button will turn the ChromaX off. To conserve battery life the LED will only be lit when the display is **ON**

CHANGING THE TEMPERATURE UNITS (*F/*C)

When the generator is **ON**, press and hold the TEMPERATURE button for 10 seconds, the temperature units will toggle to Fahrenheit (F) or Celsius (C)

USING TEMPOFLEX AS A REMOTE

The TempoFlex can be removed from its holder and used as a remote control to warm up the steam shower. When TempoFlex is returned to its holder the steam generator will run for the full set duration. After 10 minutes the steam generator turns off if TempoFlex is not returned to its dock. The steam generator will not restart for 30 minutes unless TempoFlex is returned to its dock and started with the **ON/OFF** button.

USING STEAMLINX WITH TEMPOFLEX

SteamLinx will allow the steam generator to warm up the steam room for 10 minutes, To continue the steam bath session, press any button on the TempoFlex (except the **ON/OFF** button). After 10 minutes the steam generator will turn off if TempoFlex is not touched. The steam generator will not restart for 30 minutes unless TempoFlex is returned to its dock and started with the **ON/OFF** button.

All drawing are for illustrative purposes only

USER CHARGING TEMPOFLEX

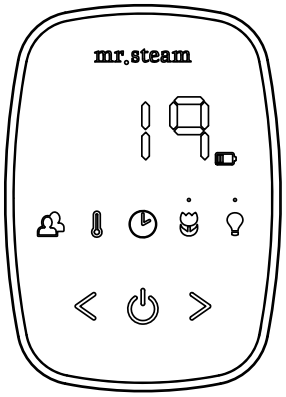

The TempoFlex will need periodic charging. The time between charges will depend on use. When the battery begins to get low a battery icon will be displayed to the right of the display.

Remove the TempoFlex from its wall dock by sliding it up and off the bayonet Holder and plug the charger into the charging port on the back of the control.

Use a soft cloth to dry off the control

⚠ **WARNING** TempoFlex must be charged in a dry location. The control must be dry before plugging in the charger.
When the control is fully charged the battery icon will disappear

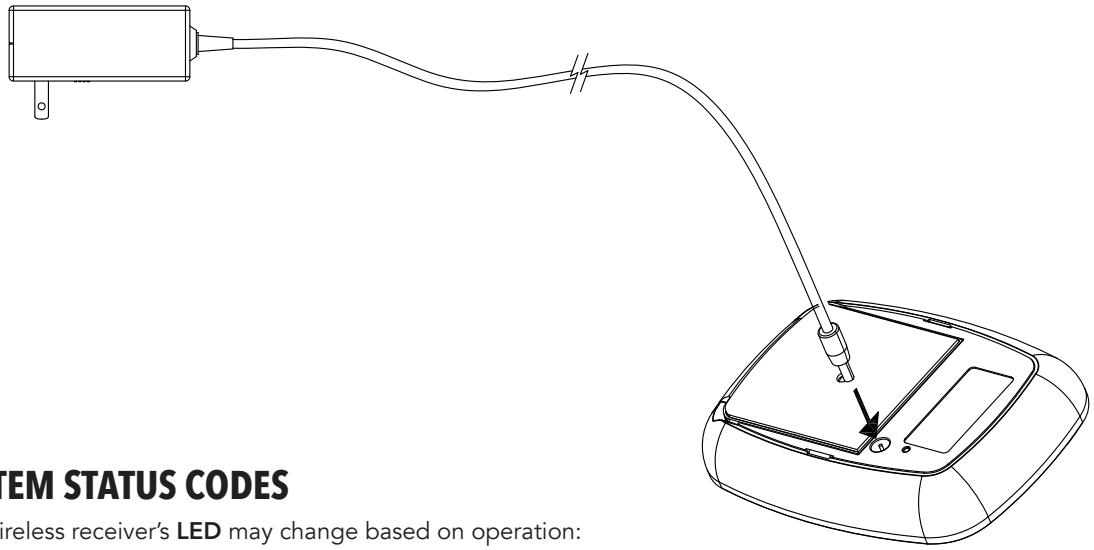

SYSTEM STATUS CODES

The wireless receiver's **LED** may change based on operation:

WHITE When the system is powered up the wireless receiver will boot up, the generator may turn on and off during this process. The process is complete when the **LED** turns green.
SOLID GREEN Steam system is not being used
GREEN WITH AMBER FLASHES Indicates the system is **ON**. The wireless receiver flashes each time information is exchanged between the TempoFlex and the wireless receiver.

The TempoFlex may display a status code if the system is not functioning correctly.

CO Indicates the TempoFlex control has lost communication with the wireless receiver. Ensure all connections are secure between the steam generator and wireless receiver and there is a green **LED** on the wireless receiver.
ERR P indicates an error while pairing, reset the system and redo pairing.
PRR1/2 Indicates and error with the internal (or MSTS) temperature probe.
ERR1 The incorrect field voltage is being supplied to the steam bath generator (green **LED** on steam generator will be **OFF**).
H2O/ERRB Steam generator water level is not satisfied.

A complete list of steam generator status codes and troubleshooting can be found in the MrSteam Residential Steambath Installation Operation and Maintenance Manual.

All drawing are for illustrative purposes only

PAIRING

TempoFlex controls are paired at the factory. Pairing should not normally need to be done, however it is recommended to confirm operation before committing the control to the wall.

To confirm pairing, plug the wireless receiver into the generator as described on page 6. Press the power button on the TempoFlex, if the control displays **ON** and then 20, it is paired. If the control displays **CO** it will need to be paired to the wireless receiver by following the steps below:

A. Turn off power to the steam bath
B. After 1 minute turn power to the steam bath back on
C. While the wireless receiver's **LED** is white, use a blunt object to press the button on the back of the TempoFlex control, the TempoFlex will display **OFF**
D. Press and hold the user preset button
E. When pairing is complete the display will show P followed by **OFF**

IMPORTANT NOTE The control does **NOT** need to be in the wall dock during pairing.

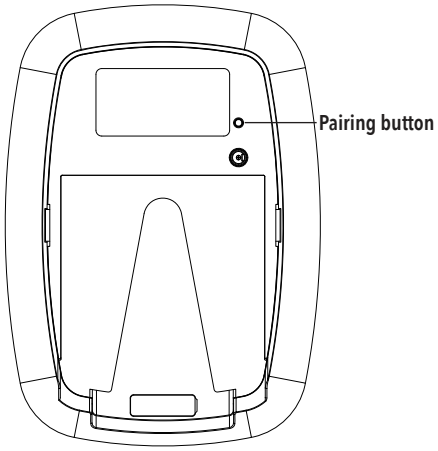

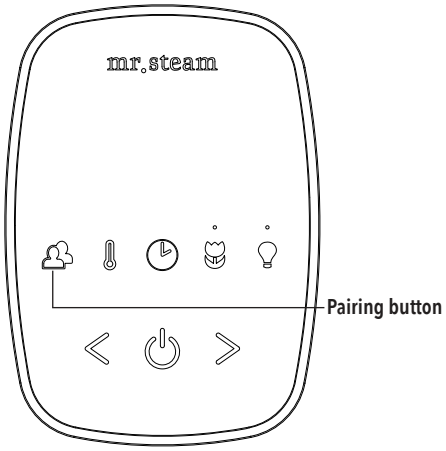

CARE TIPS FOR TEMPOFLEX CONTROLS & STEAM HEADS

1. Use only mild soap and water on a soft cloth to clean the control and steam head.
2. **DO NOT** use abrasive cleansers
3. If the decorative cover is damaged call MrSteam technical service for replacement parts.

WARRANTY

To view or download the MrSteam Residential Generator Warranty and register your Product go to: **blog.mrsteam.com/wr**

All drawing are for illustrative purposes only

mr.steam®

Feel Good Inc.®

www.mrsteam.com

Products, information and specifications are subject to change without notice.

Please call Sales & Support at 1.800.76.STEAM (East Coast) or 1.800.72.STEAM (West Coast) for more information.

mr.steam® hello@mrsteam.com | www.mrsteam.com

43-20 34th Street, Long Island City, NY 11101 1 800 76 STEAM | 9410 S. La Cienega Blvd. Inglewood CA 90301 1 800 72 STEAM

2025 © MrSteam and des., A Lifetime of Pleasure, AirTempo, AromaFlo, AudioWizard, AutoFlush, AutoSteam, Butler Package, ChromaSteam, Clean Steam...Every Time, Club Therapy, CT Day Spa, Digital 1, Express Steam, Feel Good Inc., From Bathroom to Spa, HomeWizard, iButler, iGenie, iSpa Package, iSteam, iTempo, iTempo/Plus, TempoTouch, TempoFlex, Linear Steamhead, Making Wellness a Way of Life, Music Therapy, My Steam, SmartSizing, Spa Package, Steam Genie, Steam on Demand, Steam in a Box, Steam@Home, SteamStart, SteamTherapy, Tala, Tala Bath & Body, Tempo, The Intelligent Steambath, Valet Package, and Virtual Spa System are registered trademarks of MR.STEAM.

PUR 100547 REV 6.25

INSTALLATION INSTRUCTIONS

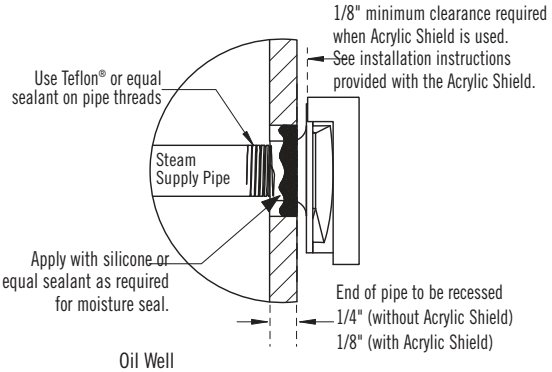

IMPORTANT: See the Installation and Operation Manual provided with the steam generator for additional important steamhead & control installation and operation information.

Installation: Steam Head (3/4" NPT)

CAUTION **INSTALLER:** Because the steam head and direct steam emissions are very hot, locate the steam head where incidental contact by bather with the steam head or direct steam emission cannot occur.

STEP 1 Locate steam head 6-12 inches above floor, except for:

1. Tub/shower enclosures, install 6 inches above tub top edge.
2. For enclosures with acrylic or other non-heat resistant flooring install Acrylic Shield Part Number 103938.
3. To prevent door seals from deteriorating do not locate the steam head where direct steam emission would contact door seals.

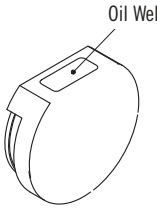

STEP 2 Install steamhead with the oil well facing up as shown. Hand tightening is sufficient when teflon or equal pipe thread sealing compound is used.

IMPORTANT NOTE: to preserve steam head finish, do not use wrench or other tools to tighten. **DO NOT** use abrasive cleansers or chemicals. Use only water with mild soap and a non-abrasive sponge.

CAUTION Consult with supplier of acrylic, fiberglass and other non-heat resistant enclosures for recommended steamhead location. Use Acrylic Shield part number MS-103938. See instructions provided with steam shield.

STEP 3 Secure a bronze drop ear fitting to a header and run a 3/4" copper steamline from the steam generator to the drop ear fitting. Install a temporary nipple (6" or longer)in the drop ear fitting to locate the steamhead after the wall is finished.

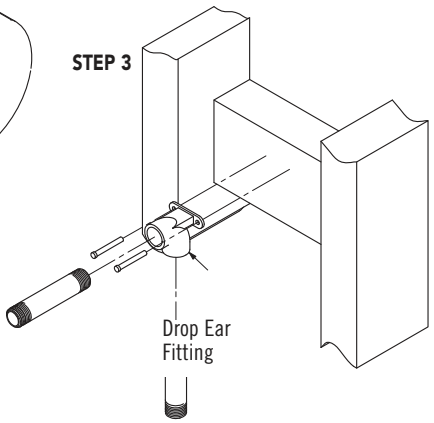

STEP 4 After the wall has been finished, mark on the nipple where the surface of the wall is. Remove the nipple and measure the portion that was in the wall (the end to your mark). Subtract 1/4" from that dimension and select a brass nipple of that length to finish the installation.

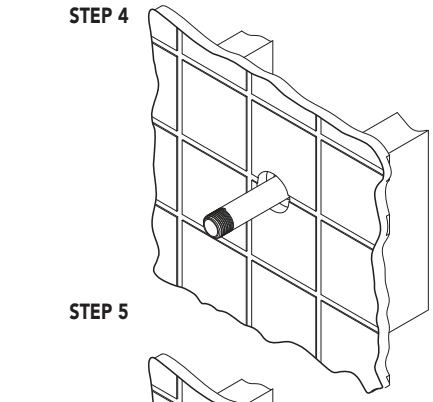

STEP 5 Wrap teflon tape around the threads of the new nipple and screw the nipple into the steamhead. Do not use wrenches or tools which would damage the steamhead's finish. Wrap teflon tape around the threads of the nipple and screw the nipple and steamhead assembly you just made into the drop ear fitting in the wall. The steamhead should be flush with the wall and the well must be facing up.

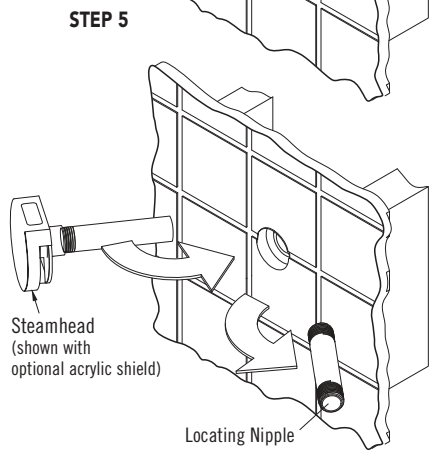

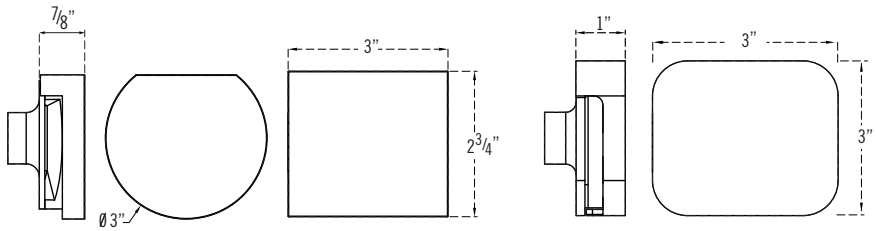

All drawings are for illustrative purposes only

mr.steam® hello@mrsteam.com www.mrsteam.com
43-20 34th Street, Long Island City, NY 11101 tel: 1 800 76 STEAM
9410 S. La Cienega Blvd. Inglewood CA 90301 tel: 1 800 72 STEAM

Installation, Operation and Maintenance Manual

Linear Steam Head

Residential Model: 104480

IMPORTANT: Leave this material with the homeowner.

mr.steam® | Feel Good Inc.®

TABLE OF CONTENTS

Important Safety Information 1-2

Installer Section:

Box Contents 3

Dimensional Information 3

General Installation 4

Faceplate 5

Installer and Home Owner Section:

Steam Emission Zone 6

Diverter 7

AromaTray 8

Replacement Parts 9

Warranty 9

Essential Oils 10

mr.steam® hello@mrsteam.com • www.mrsteam.com

43-20 34th Street, Long Island City, NY 11101 tel: 1 800 76 STEAM

9410 S. La Cienega Blvd. Inglewood CA 90301 tel: 1 800 72 STEAM

Linear Steam Head®

mr.steam®

Installer Section

Model 104480

READ ME FIRST! As you follow these instructions, you will notice **CAUTION** and **NOTICE** symbols. This information is important for the proper, safe and trouble free installation of the Linear Steam Head. These are types of potential hazards that may occur if installation instructions are not carefully followed:

CAUTION This signals a situation where injury or property damage may occur if you do not follow instructions.

NOTICE This highlights information that is especially relevant to a problem free installation.

All information in these instructions is based on the latest information available at the time of publication. MrSteam reserves the right to make changes at any time without notice.

CAUTION The following general information should be used in conjunction with consultations with a qualified architect, designer and contractor in determining factors necessary in providing a suitable and safe steam room.

CAUTION This document contains important safety, operation and maintenance information. After installation leave these instructions with the homeowner. Do not discard this instructions. Failure to leave the instructions with the homeowner may result in property damage or personal injury.

CAUTION Use one or more Linear Steam Heads for MrSteam steam generator models MS90 – MS400 and MSSUPER1–MSSUPER3, SAH3000-SAH6000.

CAUTION Use two or more Linear Steam Heads for MrSteam steam generators Models MX4, MX5 and MX6. Failure to use two or more steam heads may result in steam head operation where incidental contact by the bather with direct steam emission may occur. Failure to use two or more steam heads may result in a leak within the wall cavity and cause problems associated with leaks, moisture and property damage from leaks. Failure to use two or more steam heads may result in a hazardous condition, scalding or personal injury.

CAUTION Do not use Linear Steam Head for any MrSteam steam generator that is not one of the following models: MS90 –MS400, MSSUPER1–MSSUPER3, SAH3000-SAH6000 or MX4 –MX6. Failure to follow these instructions may result in a leak within the wall cavity and cause problems associated with leaks, moisture and property damage from leaks. Failure to follow these instructions may result in a hazardous condition, scalding or personal injury.

CAUTION Do not use the Linear Steam Head with any steam system that is not a MrSteam steam system. Failure to follow these instructions may result in a leak within the wall cavity and cause problems associated with leaks, moisture and property damage from leaks. Failure to follow these instructions may result in a hazardous condition, scalding or personal injury.

CAUTION Because the steam head and direct steam emission are very hot, locate the steam head(s) where incidental contact by the user with the steam head(s) or direct steam emission cannot occur. Do not locate the steam head(s) in any location where the steam emission zone is near a seat,bench or any space occupied by any persons. Failure to following these directions may result in a hazardous condition, scalding or personal injury.

CAUTION Linear Steam Heads are for residential use only. Do not use any Linear Steam Heads for commercial installations or with commercial steam generators (including Day Spas). Using Linear Steam Heads for commercial installations or installations with commercial steam generators may result in a leak within the wall cavity and cause problems associated with leaks, moisture and property damage from leaks. Using Linear Steam Heads for commercial installations or installations with commercial steam generators may result in a hazardous condition, scalding or personal injury.

CAUTION Do not use the Linear Steam Head with any steam system that includes equipment or devices not supplied by MrSteam, including but not limited to water softeners. Failure to follow these instructions may result in a leak within the wall cavity and cause problems associated with leaks, moisture and property damage from leaks. Failure to follow these instructions may result in a hazardous condition, scalding or personal injury.

CAUTION Only install the linear steam head in a horizontal orientation as shown in fig 3. Failure to follow these instructions may result in a leak within the wall cavity and cause problems associated with leaks, moisture and property damage from leaks. Failure to follow these instructions may result in a hazardous condition, scalding or personal injury.

CAUTION Insulate the linear steam head and piping as required to prevent elevated temperatures, including within the wall cavity. Do not locate the steam head or plumbing near any materials, including wiring, devices, or products that may be adversely affected by elevated temperatures. Check with the manufacturer of materials, wiring, devices, or products for suitability for operation at elevated temperatures. Use only insulation rated for 212F or higher steam applications. Failure to follow these instructions may result in the damage or failure of materials, wiring, devices, or products. Failure to follow these instructions may result in leaks, and cause problems associated with leaks, moisture and property damage from leaks. Failure to follow these instructions may result in a hazardous condition, scalding or personal injury.

CAUTION Steambath controls feature an integral or remote temperature sensor that senses room temperature. Install the linear steam head in a location where steam emission will not come in direct contact with the control or remote temperature sensor. Failure to follow these instructions may result in poor temperature control, a hazardous condition, scalding or personal injury.

CAUTION Only use the supplied high temperature silicone sealant as required to create a permanent moisture seal. Do not seal the steam head with grout or any other material. Failure to follow these instructions may result in leaks, and cause problems associated with leaks, moisture and property damage from leaks.

CAUTION The linear steam head must be installed by a qualified and licensed plumber. Failure to use a qualified and licensed plumber may result in a leak within the wall cavity and cause problems associated with leaks, moisture and property damage from leaks. Failure to follow these instructions may result in elevated temperatures, a hazardous condition, scalding or personal injury.

CAUTION Do not use black iron, galvanized, or plastic pipe for the steam line. Use only properly rated brass pipe or copper tubing in accordance with national and local plumbing codes. Using any piping material other than properly rated brass or copper piping may cause linear steam head damage and problems associated with leaks, moisture and property damage from leaks or steam.

CAUTION Plumb rigid copper tubing or brass pipe from the steam generator to the linear steam head. Plumbing must not form traps or valleys. Failure to follow these instructions may result in leaks, and cause problems associated with leaks, moisture and property damage from leaks. Failure to follow these instructions may result in a hazardous condition, scalding or personal injury.

CAUTION Do not modify or alter the linear steam head. Do not cover, block or insert any product that is not a MrSteam supplied linear steam head accessory with the linear steam head. Failure to follow these instructions may result in a leak within the wall cavity and cause problems associated with leaks, moisture and property damage from leaks. Failure to follow these instructions may result in a hazardous condition, scalding or personal injury.

CAUTION Do not disassemble the steam head. The steam head is shipped fully assembled and requires no additional assembly. Failure to follow these instructions may result in a leak within the wall cavity and cause problems associated with leaks, moisture and property damage from leaks.

CAUTION Before installing the linear steam head, read and follow the Installation and Operation Manual(s) provided with all system components (generator, controls, accessories...etc.). If the installation and operation manuals are not available go to www.mrsteam.com for an online copy, or contact MrSteam Customer or Technical Services at 800-767-8326 or 800-727-8326 for free copies. Failure to read and follow all the Installation and Operation Manuals may result in a leak within the wall cavity and cause problems associated with leaks, moisture and property damage from leaks. Failure to follow these instructions may result in inoperable system components, a hazardous condition, scalding or personal injury.

CAUTION Consult with the manufacturer of any non-heat resistant enclosures for elevated temperatures, steam, moisture compatibility or for suitability for use with steam. Failure to follow these instructions may result in the damage or failure of materials or products. Failure to follow these instructions may result in leaks, and cause problems associated with leaks, moisture and property damage from leaks. Failure to follow these instructions may result in a hazardous condition, scalding or personal injury.

CAUTION Do not install a Linear Steam Head in an acrylic/fiberglass tub or shower enclosure. Failure to follow these directions may cause problems associated with leaks, moisture and property damage from leaks. Failure to follow these instructions may result in elevated temperatures, a hazardous condition, scalding or personal injury.

CAUTION Do not locate the steam head where steam, elevated temperatures, moisture or water can contact any products, wall surfaces, materials, door seals, devices, electronics that are not designed for use with steam, elevated temperatures, moisture or water. Failure to follow these instructions may result in damage or improper operation of the products, wall surfaces, materials, door seals, devices or electronics.

CAUTION The optional diverter reduces the steam emission zone by redirecting steam up the wall above the steam head (see page 6). Installation of the diverter may result in the following:

- Changes to the steam distribution in the room
- Increase of the temperature of the wall and devices above the steam head
- Surface condensation patterns on the walls and ceiling

Always test the diverter to insure proper safety, installation and comfort.

NOTICE Carefully inspect the Linear Steamhead and packaging for shipping damage. In the event of shipping damage, please contact the carrier for claim information. Our customer service department can assist you with product replacement.

NOTICE Do not use abrasive cleansers or chemicals to clean the linear steam head. Use only water with mild soap and a non-abrasive sponge. The use of abrasive cleansers or chemicals will damage the finish on the linear steam head.

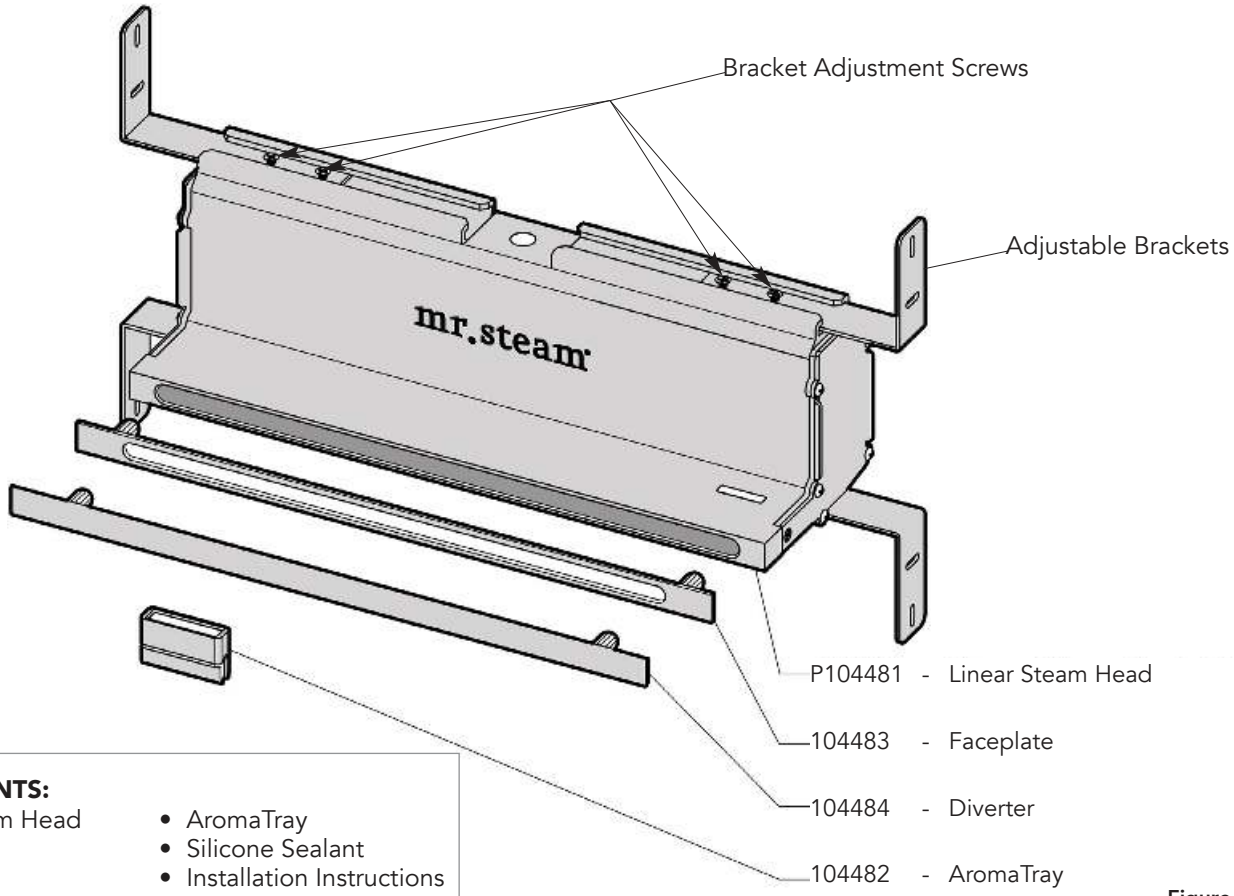

BOX CONTENTS:

- Linear Steam Head
- Faceplate
- Diverter
- AromaTray
- Silicone Sealant
- Installation Instructions

Figure 1

Dimensional Information

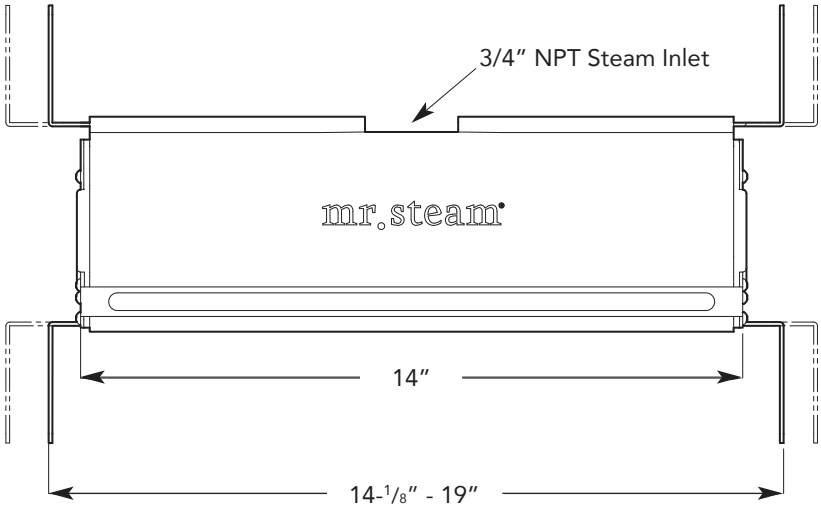

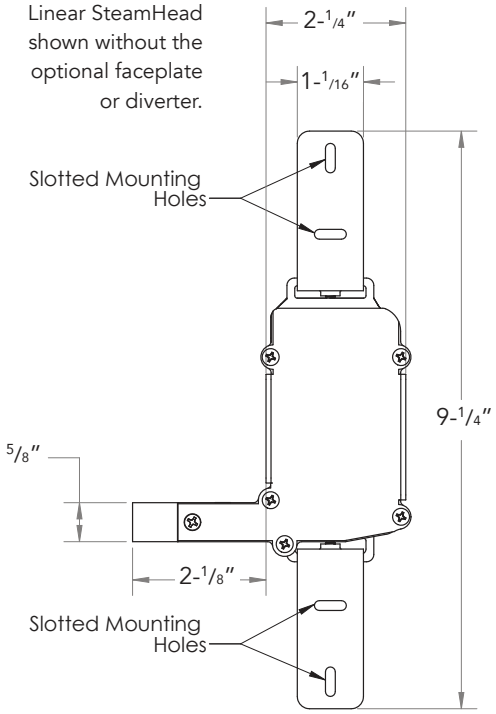

Figure 2

NOTE: ***Drawings are for illustrative purposes only.*** *Consult with qualified designer, architect or contractor for steam room construction.*

Steam Head Installation

STEP 1. Confirm proper stud spacing: The studs must have a minimum spacing of 14-1/8" and a maximum spacing 19". If the stud spacing is outside the required range then shim or otherwise reposition the studs as required.

CAUTION Installing the steam head between incorrectly spaced studs may result in damage to the steam head and result in a leak within the wall cavity and cause property damage.

STEP 2. Locate the steam head 6-12" above the finished floor. Locate the steam head where a steam bather can not come into contact with direct steam emissions. See page 6 for information on the steam emission zone.

CAUTION Steam is hot. Locate the steam head where a steam bather can not come into contact with direct steam emissions. Failure to follow these directions may result in a hazardous condition, scalding or personal injury.

STEP 3. Position the steam head between 2 properly spaced studs. Extend the adjustable brackets as required so the steam head fits snugly between two studs. Use a level to ensure the steam head is level (see Fig. 3). Tighten the eight bracket adjustment screws (supplied).

STEP 4. If the optional decorative faceplate is used, see the installation instructions for the optional faceplate on page 5. If the optional decorative faceplate is not used, position the steam head so that the steam head face will be flush with the finished wall face (see Fig. 4).

STEP 5. With the stem head properly positioned, with or without a decorative faceplate, provide eight screws as required to securely mount the steam head brackets to the studs.

CAUTION Failure to position the steam head face as instructed may result in improper steam head alignment, or a leak within the wall cavity and cause problems associated with leaks, moisture and property damage from leaks.

STEP 6. Plumb rigid copper tubing or brass pipe from the steam generator to the steam head. Use a ¾" NPT fitting appropriate for the steam piping used. Plumbing must not form traps or valleys. Thread sealant must be used as required to ensure a leak free joint between the piping and steam head.

STEP 7. Before continuing or closing the wall, test the installation, piping and steam head for leaks, traps, position, steam emission zone and for general proper installation.

CAUTION Failure to test the steam head installation may result in leaks, and cause problems associated with leaks, moisture and property damage from leaks.

Linear SteamHead shown without the optional faceplate or diverter.

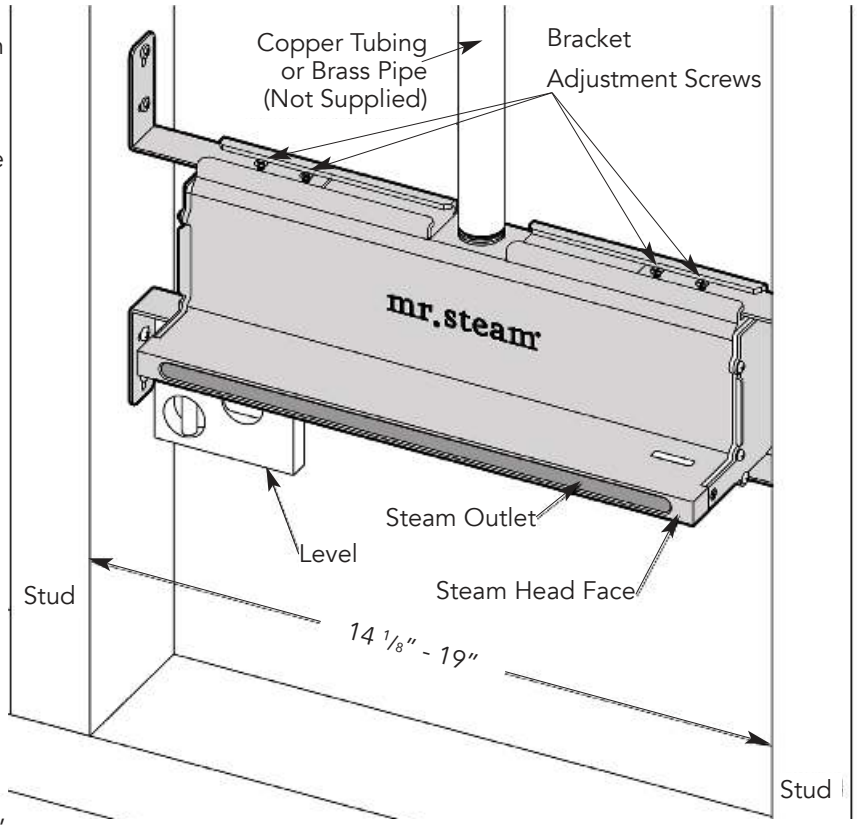

Figure 3

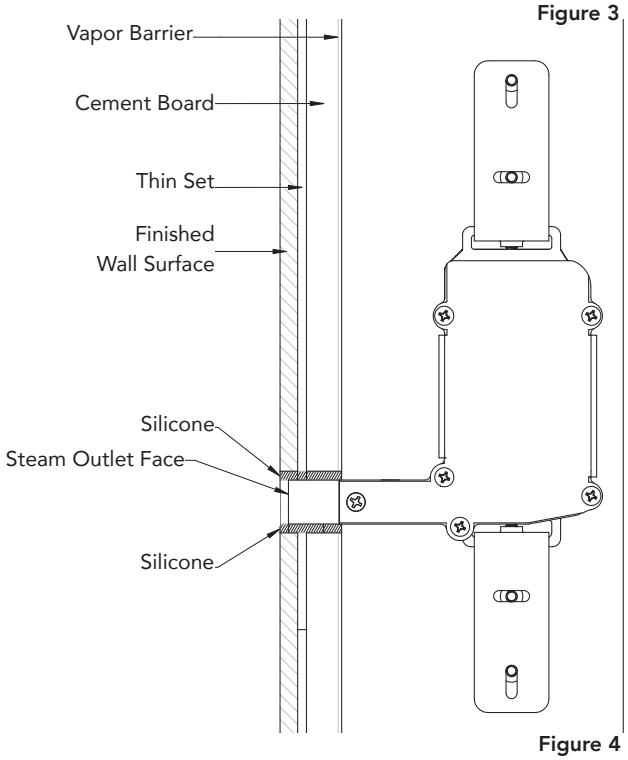

Figure 4

NOTE: ***Drawings are for illustrative purposes only.*** *Consult with qualified designer, architect or contractor for steam room construction.*

Optional Faceplate Installation

The steam head is supplied with an optional faceplate. It is not required for the functional operation of the steam head. The faceplate is a decorative accessory and is available in (8) finishes.

An optional Escutcheon (remodel plate) is available for purchase, it's larger than faceplate and is available in (8) finishes.

In **STEP 4**, instead of positioning the steam head face to be flush with the finished wall face, position the steam head so that the steam head face will be 1/8" recessed with the finished wall (see Fig. 4). This will provide clearance for the faceplate.

Apply silicone to the front of Linear Steam Head and firmly press the faceplate against the face of the steam head. Secure the faceplate as required until the silicone sets.

Return to **STEP 5** on page 4 to complete the installation.

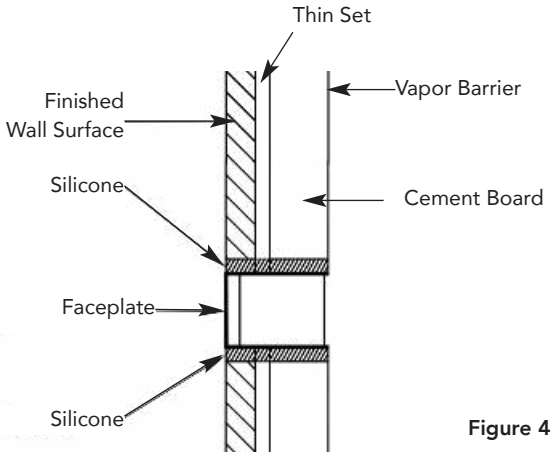

Figure 4

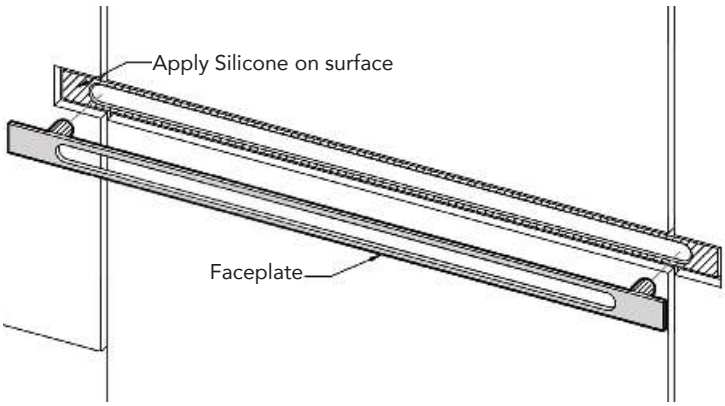

Figure 5

1. Determine the desired installation location of the control. The iSteam®, iTempo™ and iTempo/Plus™ controls are designed to be installed inside or out-side the steam room as a matter of personal prefer-ence. If the control is installed inside the steam room the control must be located:
2. 4-5 feet above the floor near the bather seating area

⚠ CAUTION

3. The control features an integral temperature sensor. Locate the control in a location representative of the desired steambathing temperatures.
   Do not locate the control above or near the steam head or direct steam emissions.
4. On a vertical wall

The control cable length is 30 feet. Insure that the control and/or steam generator are located accordingly. An optional 60 foot cable is available, PN 103990-60 for iTempo and PN 104117-60 for iSteam. Contact a MrSteam technical service representative if a 60 foot cable is required.

IMPORTANT NOTE: If the control is installed outside the steamroom a Remote Temperature Probe Part Number MSTS must be installed inside the steam room, depending on the control. Insure MrSteam steam generator is iSteam or iTempo compatible and has a serial number 900000 or higher. If iSteam is used with a generator having serial number less than 1174000, contact MrSteam technical support for an upgraded PC board.

See instructions for the MSTS Temperature Probe (located in the Control Installation Manual related to your specific control package) before rough-in or installation of control.

Steam Emission Zone

The Steam Emission Zone is the area in front of the steam head that contains dense, hot steam as it exits the steam head. Steam dissipates as it moves away from the steam head, and becomes less hot. The steam zone is the area where contact with steam presentees a scalding hazard. The steam head must be installed in a location to ensure that a steam bather will not be near the steam emission zone. The diverter reduces the steam emisson zone.

Steam Head without Optional Diverter

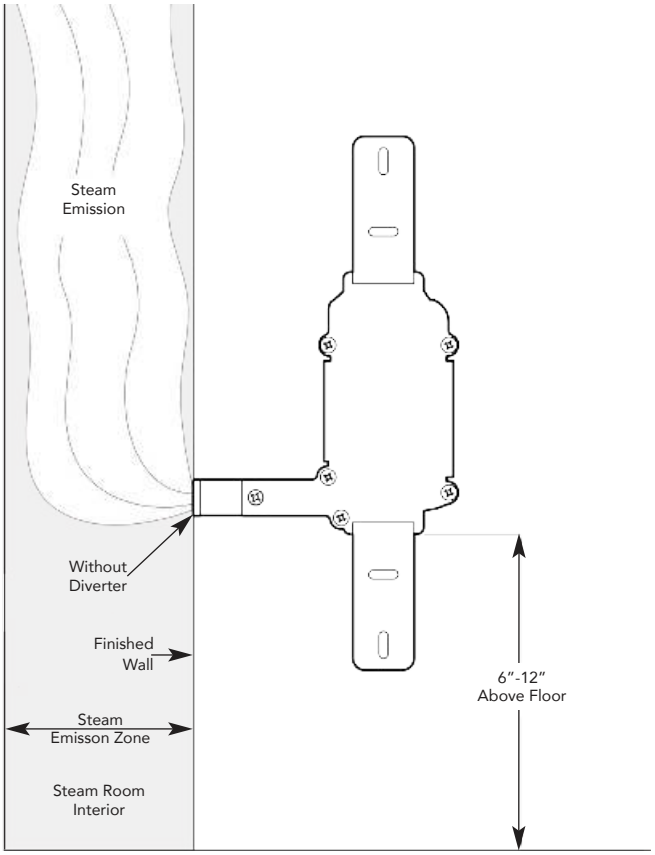

Steam Head with Optional Diverter

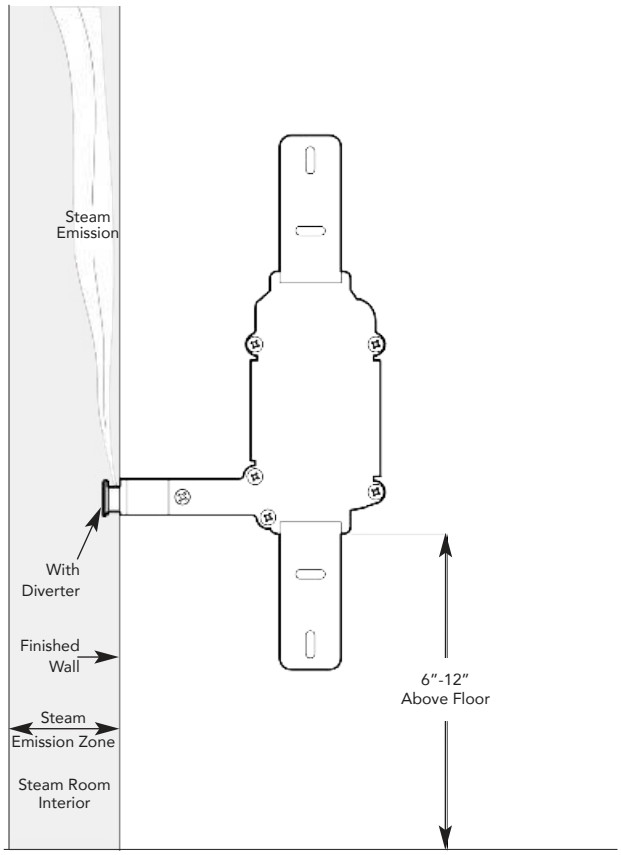

Generator Model	Minimum # of Linear Steam Heads	Steam Emission Zone with Diverter	Steam Emission Zone without Diverter
MS90-MS400 SAH3000-SAH6000	1	2”	10”
Super1-Super3	1	2”	24”
MX4-MX6	2	2”	24”

CAUTION The steam emission zone may vary with each installation. Always test the steam emission zone to insure safety.

NOTE: ***Drawings are for illustrative purposes only.*** *Consult with qualified designer, architect or contractor for steam room construction.*

Diverter

The Linear SteamHead is supplied with an optional steam diverter. The steam diverter is used to reduce the steam emission zone as required to avoid contact between a steam bather and direct steam emissions.

Supplied steam diverter does not have decorative finish. Steam diverters with decorative finish are available for purchase.

CAUTION Always use the diverter if any steam bather may come into contact with direct steam emissions. Contact MrSteam if a replacement diverter is required. Failure to use a diverter to reduce the steam emission zone as required to avoid contact between a steam bather and direct steam emissions may cause personal injury.

CAUTION Because direct steam is very hot, the diverter will be hot during the steam session, and will remain hot for a period of time after steam session. Never install, remove or adjust a diverter when the steam head is hot or if steam generator is turned on. Installing, removing or adjusting the diverter when the steam head is hot or if the steam generator is turned on may cause a burn hazard and personal injury.

CAUTION The optional diverter reduces the steam emission zone by redirecting steam up the wall above the steam head (see page 6). Installation of the diverter may result in the following:

- Changes to the steam distribution in the room
- Increase of the temperature of the wall and devices above the steam head
- Surface condensation patterns on the walls and ceiling

Always test the diverter to insure proper safety, installation and comfort.

STEP 1. Securely press the two rubber extensions into the opening of Linear Steam Head and push in firmly until the diverter is securely in place. (see Fig. 7).

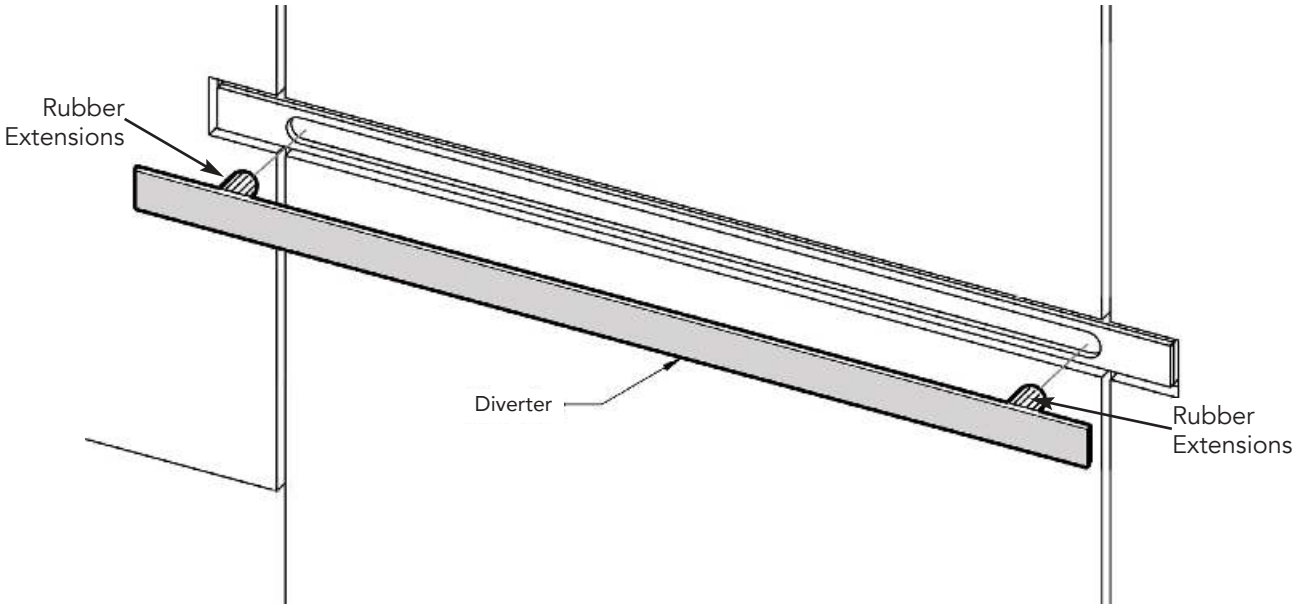

Figure 7

NOTE: ***Drawings are for illustrative purposes only.*** *Consult with qualified designer, architect or contractor for steam room construction.*

AromaTray

The AromaTray is for use with MrSteam Essential Oils. Place a few drops of Essential Oils in the AromaTray as shown to provide a fragrant steam bath experience. Read the instructions provided with the MrSteam Essential oils to insure a pleasant and safe aromatic steam bathing experience.

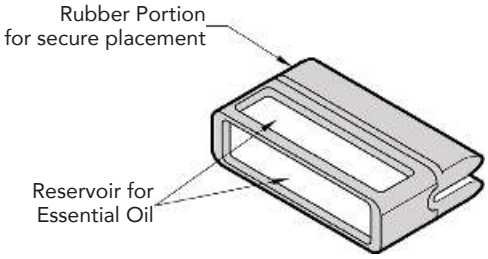

⚠ CAUTION Steam emissions, the linear steam head and AromaTray will all be hot during a steam bath session, and will remain hot for a period of time after the steam bath session. To avoid contact with the steam head and steam emissions, never install the AromaTray during a steam bath session or for a period of time after the steam bath session. Touching the AromaTray during a steam bath session, or for a period of time after the steam bath session, may result in burns, scalding or personal injury.

⚠ CAUTION Failure to first read the instructions provided with the MrSteam Essential oils may result in personal injury. If you do not have the instructions provided with the MrSteam Essential oils please call MrSteam customer or technical at 80076STEAM for a free copy, or go online at www.mrsteam.com.

AromaTray placement with the steam head or optional face plate

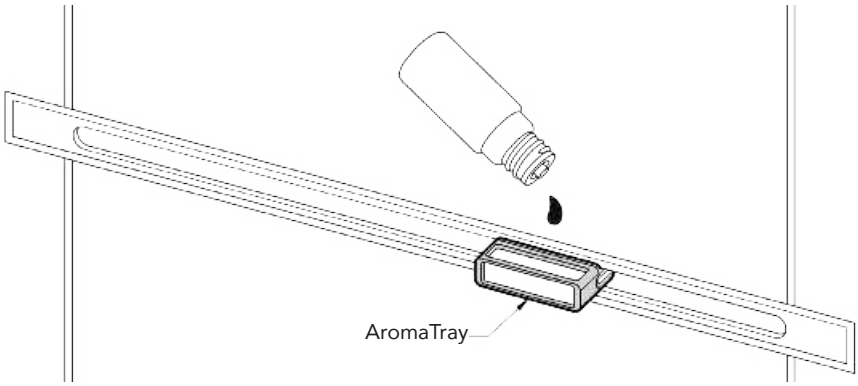

Firmly insert the rubber portion of the AromaTray into the steam outlet of Linear Steam Head with the oil reservoir facing up. Place a drop or two of AromaSteam essential oil in AromaTray. (see fig. 8)

Figure 8

AromaTray placement with the optional diverter

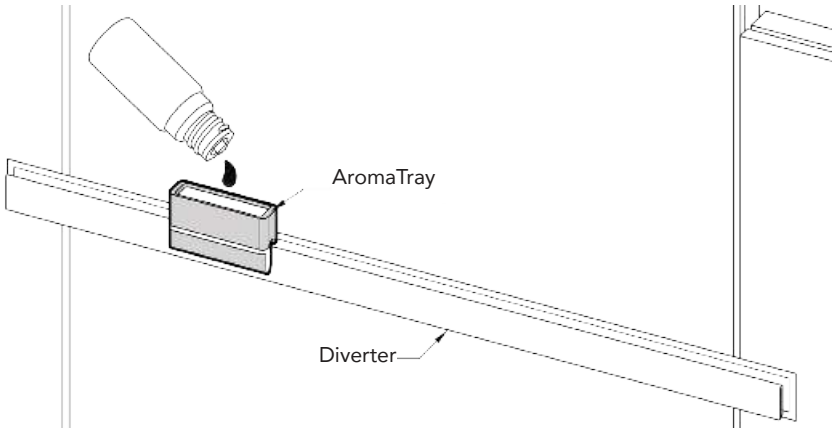

If a diverter is being used, firmly insert the rubber portion of the AromaTray onto the diverter with the oil reservoir facing up. Place a drop or two of AromaSteam essential oil in AromaTray. (see fig. 9)

Figure 9

NOTE: ***Drawings are for illustrative purposes only.*** *Consult with qualified designer, architect or contractor for steam room construction.*

Using MrSteam Essential Oils

Model 104480

Enjoy Mr.Steam essential oils by placing a drop or two, into your Mr.Steam AromaTray as shown in the illustration. Only use Mr.Steam essential oils in a Mr.Steam AromaTray. Contact a MrSteam customer or technical Service representative for essential oil Manufacturer Safety Data Sheets (MSDS).

⚠ CAUTION Start with one drop to gauge strength and suitability. Limit to a maximum of a few drops during a steambathing session.

⚠ CAUTION Use essential oils with caution. Essential oils are for external use only. Keep out of reach of children. Essential oils are highly concentrated and are potent substances and should not be applied directly to the skin as they can be irritants. Use essential oils with caution.

⚠ CAUTION Place the drops into the Mr.Steam AromaTray recess prior to turning on the steambath. Do not place drops in a hot steamhead as serious injury can result if you do not follow this warning.

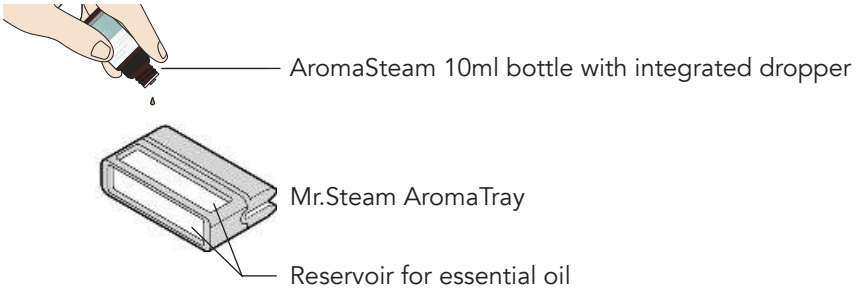

⚠ CAUTION Some people may find that the aroma makes them dizzy. In the event of dizziness, the user should exit the steambath immediately and breathe in fresh air. If skin irritation occurs stop using the oils right away. Remove any excess oil by washing in mild soap and water

⚠ CAUTION In case of contact with eyes, rinse immediately with plenty of water and seek medical advice. If ingested, rinse mouth with water. Administer water or milk to dilute. Contact a physician immediately. Tightly close containers when storing oils. Keep away from sources of ignition.

Warranty

To view or download the MrSteam Residential Generator Warranty and register your product go to: **blog.mrsteam.com/wr**

For Installation assistance please call Customer or Technical support:
East Coast 1-800-767-8326 West Coast 1-800-727-8326
To view an installation video please go to: www.mrsteam.com. This video is for added visual assistance only.
Do not install the Linear Steam Head using the video. Use only these installation instructions for a safe and problem free installation.

NOTE: ***Drawings are for illustrative purposes only.*** *Consult with qualified designer, architect or contractor for steam room construction.*

Model 104480

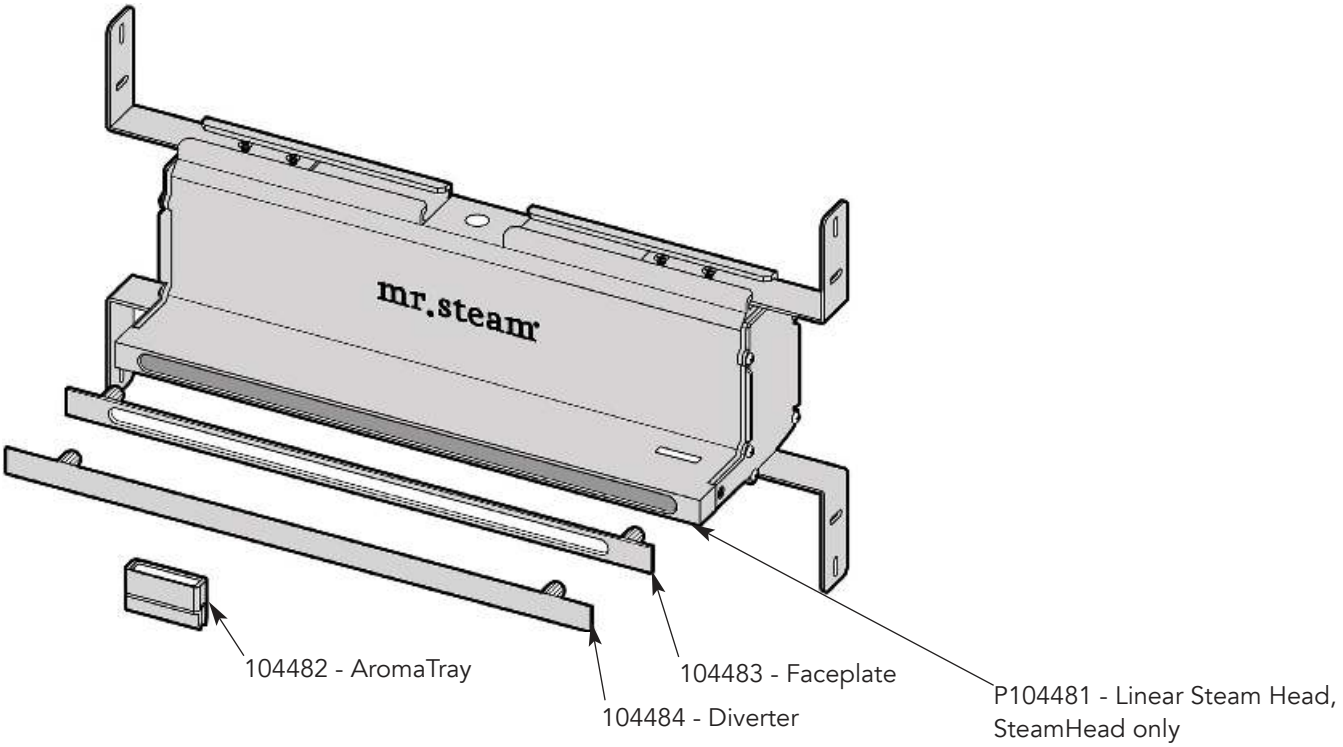

Replacement Parts

Part Number	Description
104482BB	AromaTray for LSH, Brush Bronze
104482BN	AromaTray for LSH, Brush Nickel
104482MB	AromaTray for LSH, Matte Black
104482ORB	AromaTray for LSH, Oil Rubbed Bronze
104482PB	AromaTray for LSH, Polish Brass
104482PC	AromaTray for LSH, Polish Chrome
104482PN	AromaTray for LSH, Polish Nickel
104482SB	AromaTray for LSH, Satin Brass
104483BB	LSH Faceplate Brush Bronze
104483BN	LSH Faceplate Brush Nickel
104483MB	LSH Faceplate Matte Black
104483ORB	LSH Faceplate Oil Rubbed Bronze
104483PB	LSH Faceplate Polish Brass
104483PC	LSH Faceplate Polish Chrome
104483PN	LSH Faceplate Polish Nickel
104483SB	LSH Faceplate Satin Brass

Optional Accessories

Part Number	Description
104485BB	LSH Escutcheon Brush Bronze
104485BN	LSH Escutcheon Brush Nickel
104485MB	LSH Escutcheon Matte Black
104485ORB	LSH Escutcheon Oil Rubbed Bronze
104485PB	LSH Escutcheon Polish Brass
104485PC	LSH Escutcheon Polish Chrome
104485PN	LSH Escutcheon Polish Nickel
104485SB	LSH Escutcheon Satin Brass
104486BB	LSH Diverter Brush Bronze
104486BN	LSH Diverter Brush Nickel
104486MB	LSH Diverter on Matte Black
104486ORB	LSH Diverter Oil Rubbed Bronze
104486PB	LSH Diverter Polish Brass
104486PC	LSH Diverter Polish Chrome
104486PN	LSH Diverter Polish Nickel
104486SB	LSH Diverter Satin Brass

mr.steam® hello@mrsteam.com | www.mrsteam.com

43-20 34th Street, Long Island City, NY 11101 TEL: 1 800 76 STEAM I 9410 S. La Cienega Blvd. Inglewood CA 90301 TEL: 1 800 72 STEAM

2020 © MrSteam and des., A Lifetime of Pleasure, AirTempo, AromaFlo, AudioWizard, AutoFlush, AutoSteam, Butler Package, ChromaSteam, Clean Steam...Every Time, Club Therapy, CT Day Spa, Digital 1, Express Steam, Feel Good Inc., From Bathroom to Spa, HomeWizard, iButler, iGenie, iSpa Package, iSteam, iTempo, iTempo/Plus, Linear Steamhead, Making Wellness a Way of Life, Music Therapy, My Steam, SmartSizing, Spa Package, Steam Genie, Steam on Demand, Steam in a Box, Steam@Home, SteamStart, SteamTherapy, Tala, Tala Bath & Body, Tempo, The Intelligent Steambath, Valet Package, and Virtual Spa System are registered trademarks of MrSteam.

PUR103936 Rev 05/22

SteamLinx INSTALLATION INSTRUCTIONS

SteamLinx Module and Mobile App allows for seamless control of time and temperature using your smart phone or mobile device. SteamLinx hardware is required for control with the SteamLinx Skill for Alexa. SteamLinx works with all MrSteam controls (for MS generators SN 1174000 and up).

These instructions contain safety alert symbols and panels. These alert symbols and panels identify potential safety hazards and provide important information for the installation and use of SteamLinx.

Read the Installation, Operation and Maintenance Manual for Steambath Generator Systems (PUR100472) before installation of SteamLinx to insure safety and proper installation of the steam Generator. A free replacement manual is available by calling MrSteam Customer Service, or it can be downloaded from mrsteam.com

All drawings for schematic purposes only.

Package Contents:

- SteamLinx A with Integral Cable
- SteamLinx B and Ethernet Cable
- Power Supply and Cable
- Instructions

WARNING Indicates a potentially hazardous situation, which, if not avoided, may result in death or serious injury.

CAUTION Indicates a potentially hazardous situation, which, if not avoided, may result in minor or moderate injury or product damage.

NOTICE Is used to address practices not related to physical injury.

NOTICE SteamLinx cannot be set up on a Virtual Private Network (VPN).

1

NOTICE Notice alert SteamLinx A and B signal range is limited max. distance of 60ft.

Connecting SteamLinx A to the Steam Generator

- Disconnect power to the generator at the breaker box.
- Locate the SteamLinx A (with the integral cable).

WARNING To prevent shock hazard, disconnect power at the breaker box before removing generator cover

- Remove knock-out.
- Remove generator cover.
- Route the SteamLinx A cable through the knockout

WARNING ELECTRICAL SHOCK HAZARD. MrSteam steam generators are connected to 240V line voltage and contain live electrical components. All installation and service must be performed by a licensed and qualified electrician.

- Locate the circuit board.
- Plug the SteamLinx A into the white connector located at the far left side of the circuit board.
- Replace cover and screws.
- Restore power.

WARNING ELECTRICAL SHOCK HAZARD. MrSteam steam generators are connected to 240V line voltage and contain live electrical components. All installation and service must be performed by a licensed and qualified electrician.

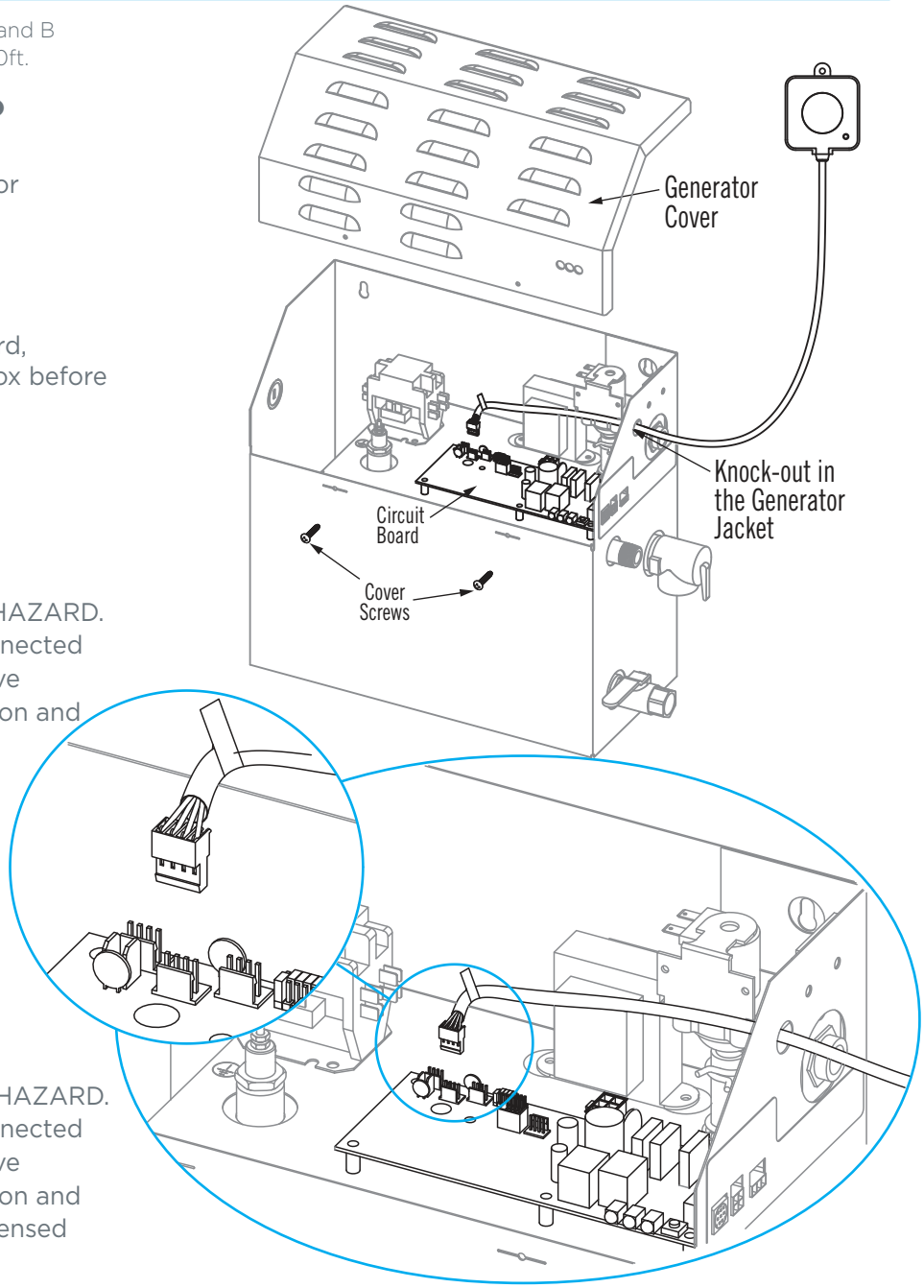

2 Connecting SteamLinx B to the Home Router

- Plug the blue ethernet cable provided, into an ethernet slot on the back of the home router.
- Plug the power supply into a 120V outlet.

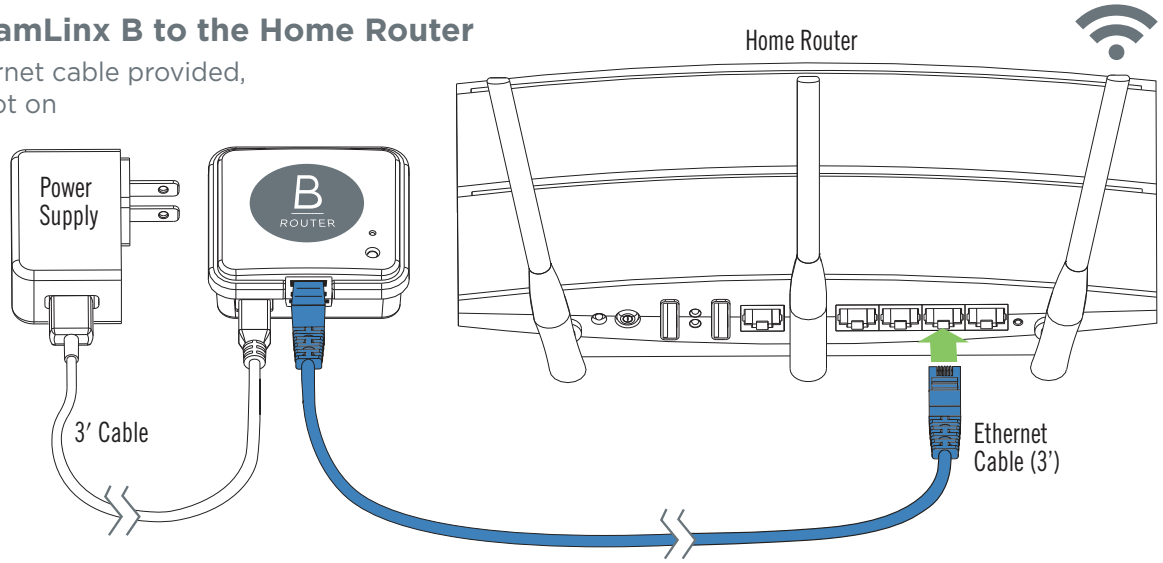

3 Connecting SteamLinx to the Internet

- Insure the mobile device is on the WiFi network.
- Download the SteamLinx App from the Apple Store or Google Play by following prompts.
- Enable the SteamLinx Skill for Alexa through your Alexa App.

4 Troubleshooting: Blinking LED

Units are out of range or not paired

- Turn breaker off.
- Insure SteamLinx A is connected to the steam generator.
- Use a paperclip or similar blunt end object to press the reset button (above the LED) on SteamLinx B.
- The LED will flash yellow (it stays in pairing mode until it is paired or powered off).
- Turn the breaker to the steam generator ON, if the two transmitters are functioning correctly and within range the LEDs will turn blue.
- If the Blue, Green or Red LEDs are blinking the units are not pairing because they are out of range. Using an extension cord for power, move the SteamLinx B closer to SteamLinx A. Disconnect the ethernet cable (the router connection is not required for this test). If the LEDs stop blinking this confirms the units were out of range.

Troubleshooting: Indicator Lights

LEDs

Yellow	Blinking units are in pairing mode.
Red	Router not detected: problem with connections, router configuration or steam generator circuit board.
Green	SteamLinx B: router is detected but is not connecting to the internet.
Blue	Units are connected correctly.

5 Tech Service Contact

CUSTOMER and TECH SUPPORT

Web: Visit mrsteam.com for additional information including product specifications, locating a device, sizing calculator, technical downloads and other resources.

Call: Mon.– Fri.: 8 am - 7 pm
East Coast: 1.800.767 STEAM (8326)
West Coast: 1.800.727 STEAM (8326)
Worldwide: 1.718.937.4500

6 Warranty

To view or download the SteamLinx warranty and register, go to **blog.mrsteam.com/wr**

mr.steam® hello@mrsteam.com I www.mrsteam.com
43-20 34th Street, Long Island City, NY 11101 800 76 STEAM

PUR 100518 9.22

Condensation Pan

103867 & 104402

Mr.Steam strongly recommends the use of a condensation pan in the unlikely event of a plumbing leak.

Locate the condensation pan on a solid level surface and place the steam generator inside the condensation pan. Insure the steam generator is level.

All plumbing shall be performed by a qualified licensed plumber and in accordance with applicable national and local codes. Check local plumbing code for receptor, trap and vent requirements. Condensation pans drain by gravity.The condensation pan is equipped with an integral 3⁄4" NPT fitting.

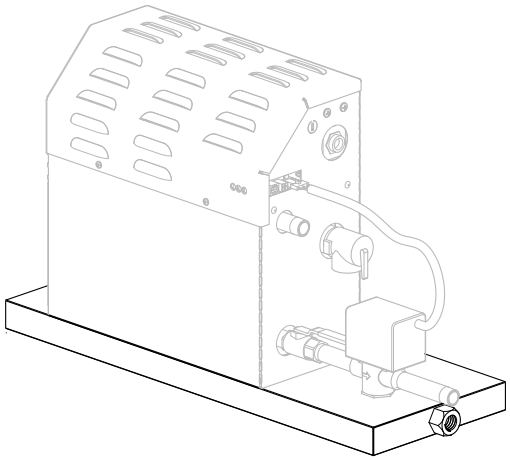

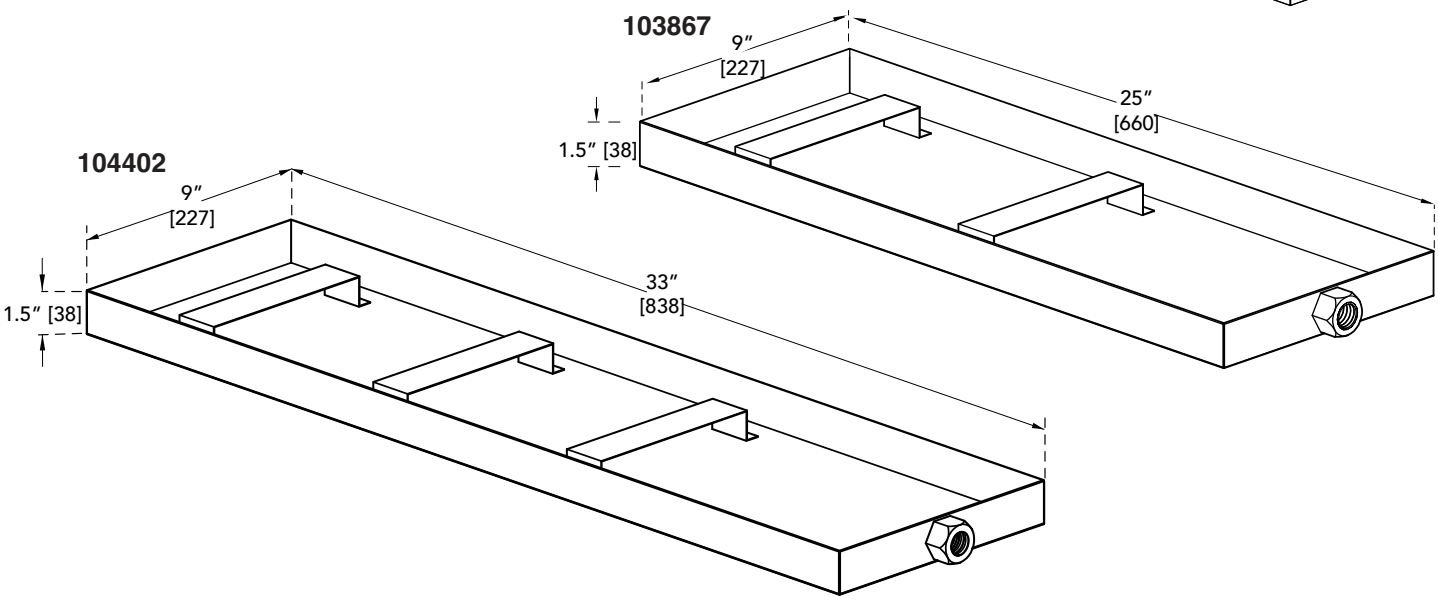

NOTE: For MX4E, MX5E and MX6E use model 104402

FOR ILLUSTRATIVE PURPOSES ONLY. **IMPORTANT NOTE: FOR SAFE AND TROUBLE FREE INSTALLATION** visit mrsteam.com before installation to download the Installation, Operation and Maintenance Manual or refer to the manual provided with the unit.

MODEL	PROJECT INFORMATION	
☐ 103867 ☐ 104402	Location:	Contractor:
	Architect:	Submitted By:
	Engineer:	Date:
Notes:		

mr.steam®

Optional AutoFlush® System

INSTALLATION INSTRUCTIONS

BOX CONTENTS:

- AutoFlush System Valve with Cord
- Installation Instructions.

ASSEMBLY OF OPTIONAL AUTOFLUSH® SYSTEM

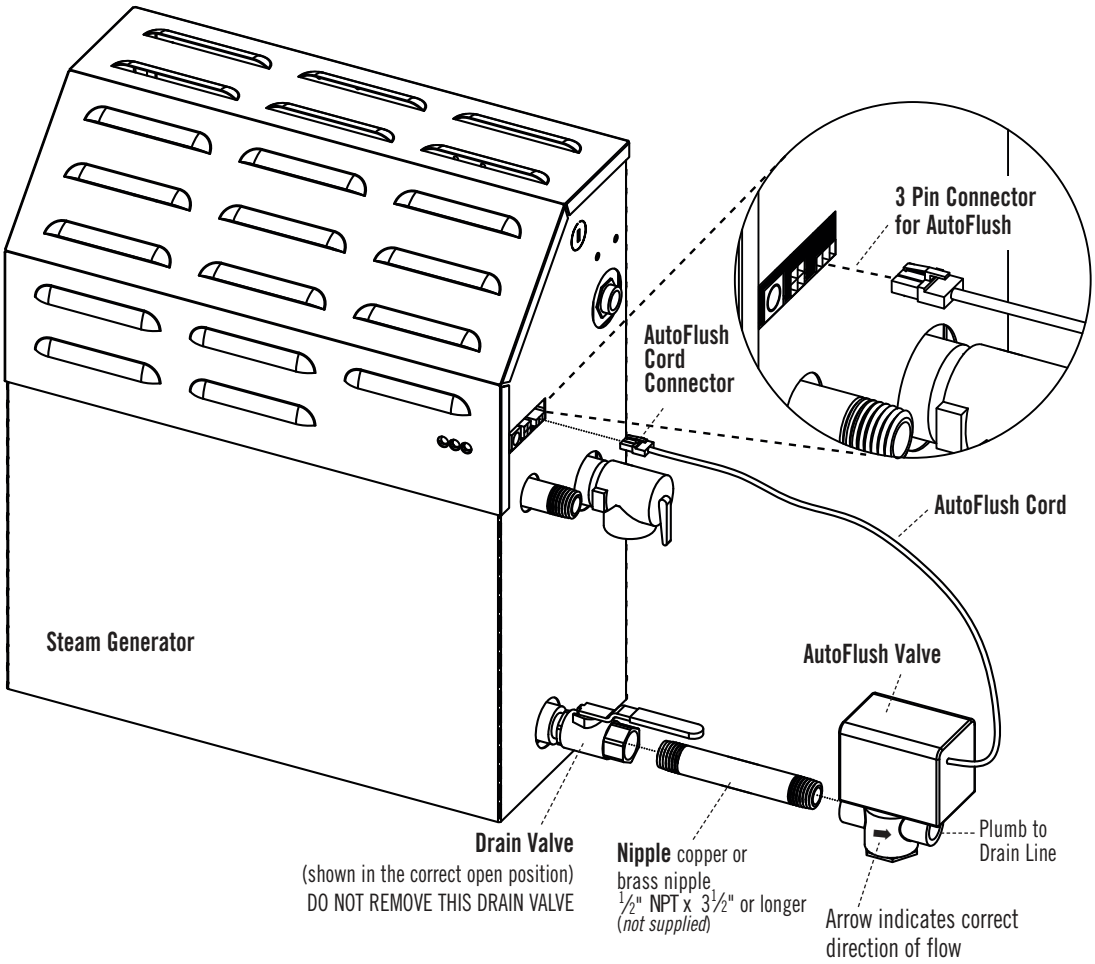

OPERATION

The optional AutoFlush System feature automatically drains the MrSteam system following each use. A time delay allows the water to cool down (about two hours) before it drains resulting in a safe and gentle operation.

mr.steam® hello@mrsteam.com • www.mrsteam.com
43-20 34th Street, Long Island City, NY 11101 1 800 76 STEAM I 9410 S. La Cienega Blvd. Inglewood CA 90301 1 800 72 STEAM

INSTALLATION INSTRUCTIONS

1. Plumbing to be performed by a qualified plumber and shall be in accordance with applicable National and Local codes. Unit drains by gravity. A drain line that is lower than the AutoFlush assembly must be available. The AutoFlush System valve outlet is threaded 1/2" NPT. Check plumbing code for receptor, trap and vent requirements.
2. Use copper or brass nipple 1/2" NPT x 31/2" (90mm) or longer (not supplied) to connect AutoFlush valve to the Drain Valve (flow direction is indicated on bottom of AutoFlush Valve).

CAUTION DO NOT REMOVE THE DRAIN VALVE
Removal may cause equipment and property damage. If there is not enough room for the valve, an elbow and a short nipple (*not provided*) can be added.

3. Open Drain Valve (handle must be aligned with brass nipple).
4. Connect the AutoFlush System cord connector to the three pin connector as shown.

WARNING Do not drain into a steam enclosure or any location where accidental contact with drain water may occur. In the event of a power failure the AutoFlush System valve will open and may discharge boiling water.

SWEAT FITTINGS

When using sweat fittings use only tin base solder with a melting point below 600 degrees F. Do not overheat. Ends of water supply tubing must be thoroughly clean for a minimum distance of 1" from ends. Do not remove valve cover.

TO CHECK OPERATION

1. Turn on MrSteam with the control and allow tank to fill with water. (see MrSteam Instruction Manual)
2. Turn off MrSteam with the control. Water should stay in tank.
3. Turn off power at the panel box. Water should discharge from tank.
4. Turn on power at panel box.
5. Repeat

CAUTION PROVIDE DRAIN PLUMBING ACCORDING TO LOCAL CODES. PLUMB AS REQUIRED FOR AUTOFLUSH SYSTEM.

AutoFlush® Shown Fully Assembled

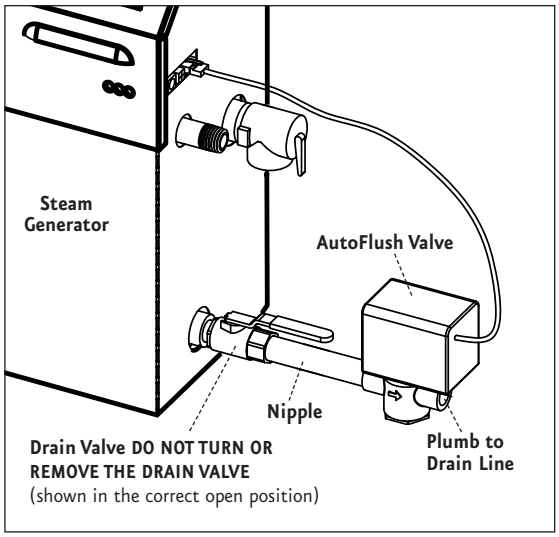

Installing AutoFlush on Older Model Generators SN:899,999 and below

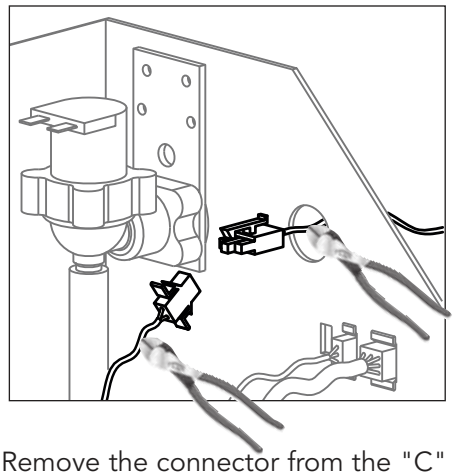

1. Remove the connector from the "C" location in the jacket. Cut off the connector where shown and strip back the wires approx 0.375"
2. Cut the connector off the AutoFlush cable where shown and strip back the wires approx 0.375".
3. Remove the knockout in the side of the generator and install a bushing to prevent chafing.
4. Route the wires from the AutoFlush through the knockouts and connect the white wire from the AutoFlush to the white wire from the circuit board using a wire nut. Repeat for the black wire.

IMPORTANT NOTE: Contact the MrSteam Technical Service Dept. for installation of any equipment not shown in these instructions. East Coast: 800-767-8326; West Coast: 800-727-8326

WARRANTY: To view or download the MrSteam Controls & Accessories Warranty and register your product go to: **blog.mrsteam.com/wr**

mr.steam®

Optional AutoFlush® System

INSTALLATION INSTRUCTIONS

BOX CONTENTS:

- AutoFlush System Valve with Cord
- Installation Instructions.

ASSEMBLY OF OPTIONAL AUTOFLUSH® SYSTEM

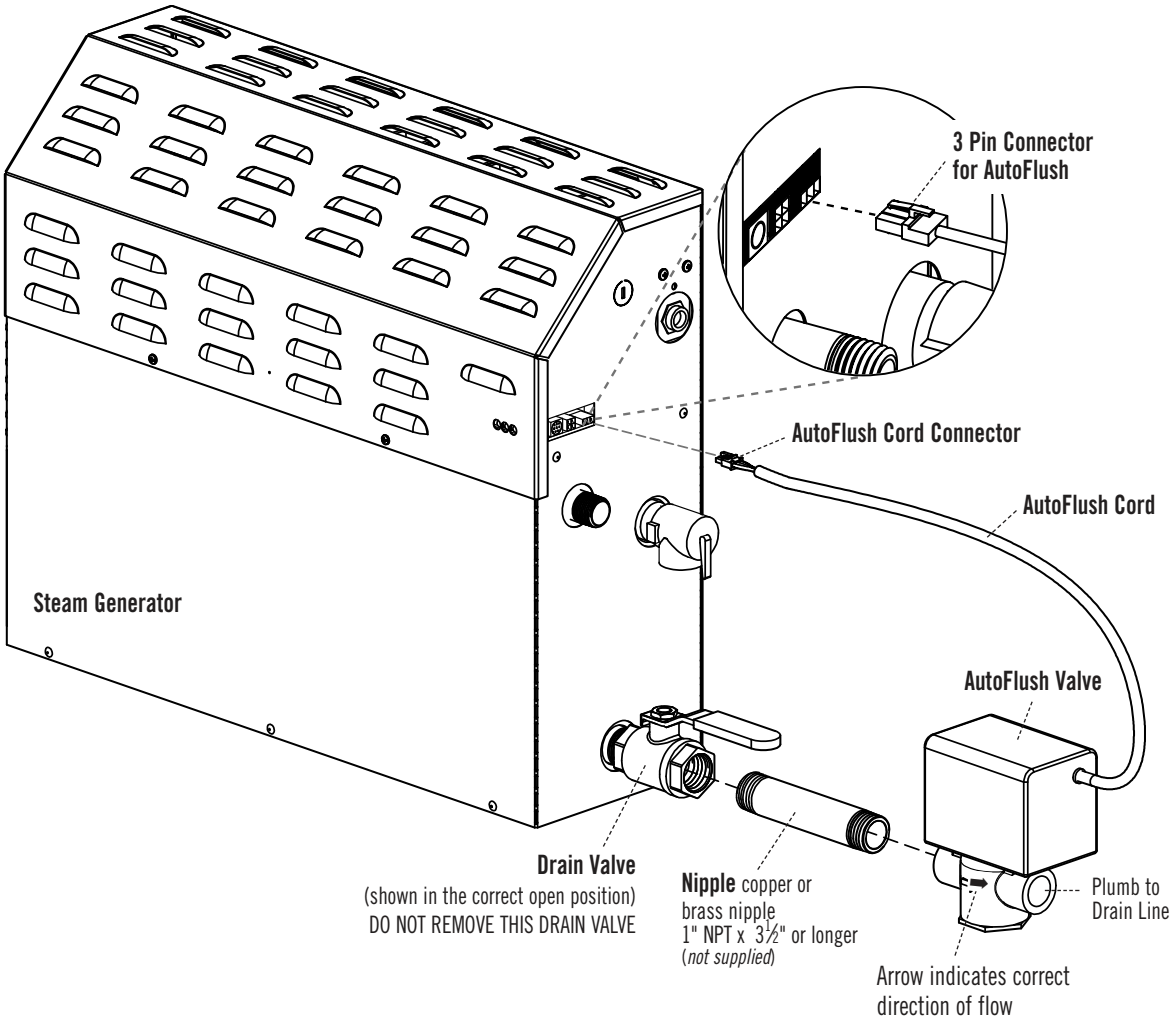

OPERATION

The optional AutoFlush System feature automatically drains the MrSteam system following each use. A time delay allows the water to cool down (about two hours) before it drains resulting in a safe and gentle operation.

mr.steam® hello@mrsteam.com www.mrsteam.com
43-20 34th Street, Long Island City, NY 11101 1 800 76 STEAM I 9410 S. La Cienega Blvd. Inglewood CA 90301 1 800 72 STEAM

INSTALLATION INSTRUCTIONS

1. Plumbing to be performed by a qualified plumber and shall be in accordance with applicable national and local codes. Unit drains by gravity. A drain line that is lower than the AutoFlush assembly must be available. The AutoFlush System valve outlet is threaded 1" NPT. Check plumbing code for receptor, trap and vent requirements.
2. Use copper or brass nipple 1" NPT x 3½" or longer (*not supplied*) to connect AutoFlush valve to the Drain Valve (flow direction is indicated on bottom of AutoFlush Valve)

CAUTION DO NOT REMOVE THE DRAIN VALVE
Removal may cause equipment and property damage. If there is not enough room for the valve, an elbow and a short nipple (*not provided*) can be added.

3. Open Drain Valve (handle must be aligned with brass nipple).
4. Connect the AutoFlush System cord connector to the three pin connector as shown.

WARNING Do not drain into a steam enclosure or any location where accidental contact with drain water may occur. In the event of a power failure the AutoFlush System valve will open and may discharge boiling water.

SWEAT FITTINGS

When using sweat fittings use only tin base solder with a melting point below 600 degrees F. Do not overheat. Ends of water supply tubing must be thoroughly clean for a minimum distance of 1" from ends. Do not remove valve cover.

TO CHECK OPERATION

1. Turn on MrSteam with the control and allow tank to fill with water. (see MrSteam Control Instruction Manual)
2. Turn off MrSteam with the control. Water should stay in tank.
3. Turn off power at the panel box. Water should discharge from tank.
4. Turn on power at panel box.
5. Repeat

CAUTION PROVIDE DRAIN PLUMBING ACCORDING TO LOCAL CODES. PLUMB AS REQUIRED FOR AUTOFLUSH SYSTEM.

AutoFlush® Shown Fully Assembled

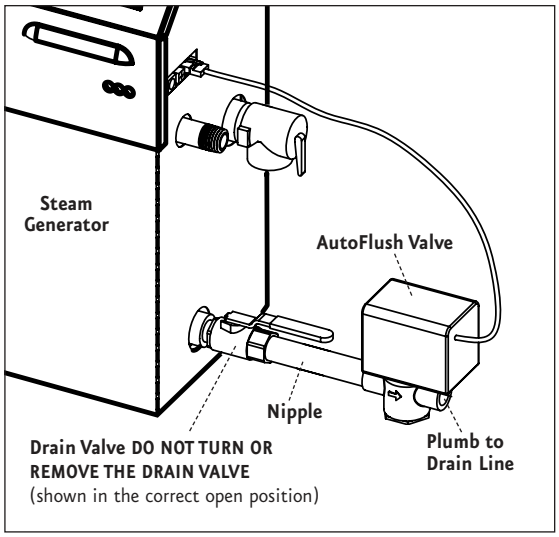

IMPORTANT NOTE: Contact the MrSteam Technical Service Department for installation of any equipment not shown in these instructions. East Coast: (800) 767-8326; West Coast: (800) 727-8326

WARRANTY: To view or download the MrSteam Controls & Accessories Warranty and register your product go to: **blog.mrsteam.com/wr**