Installation, Operation and Maintenance Manual

xButler Package

mr.steam® | Feel Good Inc.

Installation, Operation & Maintenance Manual

iSteamX

mr.steam® | Feel Good Inc.®

READ ME FIRST!

WARNING As you follow these instructions, you will notice warning and caution symbols. This blocked information is important for the safe and efficient installation and operation of this generator. These are types of potential hazards that may occur during installation and operation:

WARNING Indicates a potentially hazardous situation, which, if not avoided, could result in death or serious injury.

CAUTION Indicates a potentially hazardous situation, which, if not avoided may result in minor or moderate injury or product damage.

NOTICE This highlights information that is especially relevant to a problem-free installation.

All information in these instructions is based on the latest product information available at the time of publication. Mr.Steam reserves the right to make changes at any time without notice.

When installing and using this electrical equipment, basic safety precautions should always be followed, including the following:

IMPORTANT SAFETY INSTRUCTIONS

1. **READ AND FOLLOW ALL INSTRUCTIONS**

2. **WARNING** Do not permit children under the age of 16 to use this steambath.

3. **WARNING** Steam is hot and can cause injury or death if improperly used. Steam rooms contain steam and elevated temperatures. Please read and observe all warnings in this manual before installing or using a steam room.

4. **WARNING** To reduce the risk of injury:

   A. The wet surfaces of steam enclosures may be slippery. Use care when entering or leaving.

   B. The steam head is hot. Do not touch the steamhead and avoid the steam near the steamhead.

   C. Prolonged use of the steam system can raise excessively the internal human body temperature and impair the body's ability to regulate its internal temperature (hyperthermia). Limit your use of steam to 10-15 minutes until you are certain of your body's reaction.

   D. Excessive temperatures have a high potential for causing fetal damage during the early months of pregnancy. Pregnancy or possibly pregnant women should consult a physician regarding correct exposure.

   E. Obese persons and persons with a history of heart disease, low or high blood pressure, circulatory system problems, or diabetes should consult a physician before using a steambath.

   F. Persons using medication should consult a physician before using a steambath since some medication may induce drowsiness while other medications may affect heart rate, blood pressure and circulation.

SAVE THESE INSTRUCTIONS

HYPERTHERMIA occurs when the internal temperature of the body reaches a level several degrees above the normal body temperature of 98.6° F. The symptoms of hyperthermia include an increase in the internal temperature of the body, dizziness, lethargy, drowsiness, and fainting. The effects of hyperthermia include:

a) Failure to perceive heat;
b) Failure to recognize the need to exit the steambath;
c) Unawareness of impending risk;
d) Fetal damage in pregnant women;
e) Physical inability to exit the steambath; and
f) Unconsciousness.

WARNING
The use of alcohol, drugs, or medication can greatly increase the risk of hyperthermia.

Table of Contents:

Important Safety Instructions 1

INSTALLER INFORMATION

Installation Template 1

Box Content 2

Dimensional Information 2

Before Installing 3

Locating the Control 4

iSteamX® Installation 5-6

USER/HOMEOWNER INFORMATION 7

Operating Instructions

Stand-By, Start, Program 8

Steam Settings, ChromaSteam, AromaSteam 9

Apps, User Profiles & Setting, User Programs 10

System Log: Passcode 11

AutoStart 11

SPAH20 12-15

Care Tips, Safety & Operating Info 16

Warranty 16

FCC Statement 17

Description of Operation 18

Box Contents:

- iSteamX Control
- iSteamX Hub
- Power Supply
- Control Cable w/Mini-Din (30ft)
- iSteamX cable w/Screw connector (30ft)
- Steamhead
- Tube of silicone sealant
- Owner's manual

Dimensional Information

iSteamX

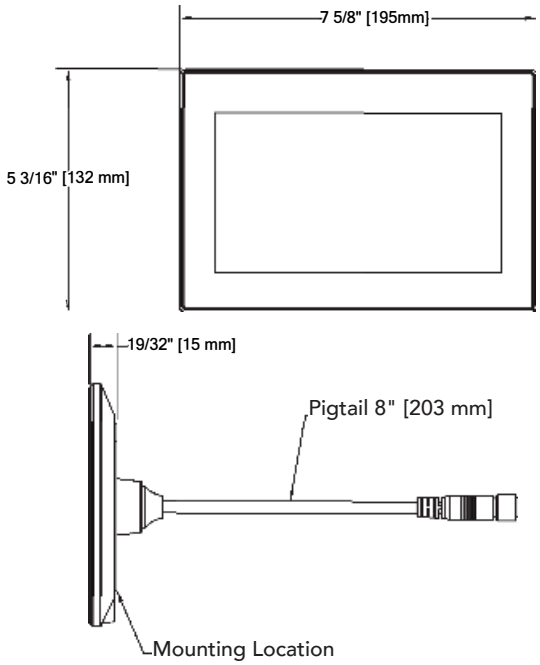

iSteamX Hub

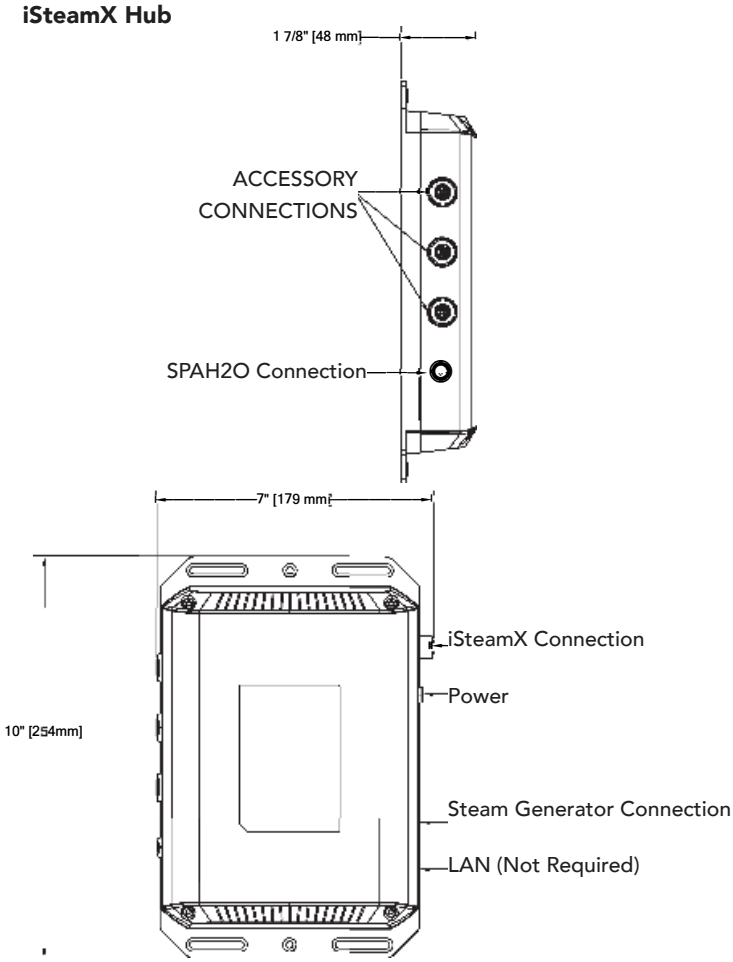

WARNING To avoid unintentional steambath operation, do not locate the control where other controls, accessories, shower heads, valves, body sprays or similar within the shower could cause confusion or interfere with the Mr.Steam control's intended use and function.

CAUTION

- To prevent possible injury Do Not use the iSteamX control without reading and understanding the Mr.Steam steam generator Installation and Operation Manual.
- A peel and stick warning sticker is provided in the Mr.Steam steam generator Installation, Operation and Maintenance Manual. This manual is provided with every steam generator. The warning sticker must be read and permanently affixed in a conspicuous location near the steam room. Failure to read and affix this warning sticker in a conspicuous location may result in serious injury or death. Please call Mr.Steam at 800 767-8326 for a free replacement or if you have any questions regarding the warning sticker.

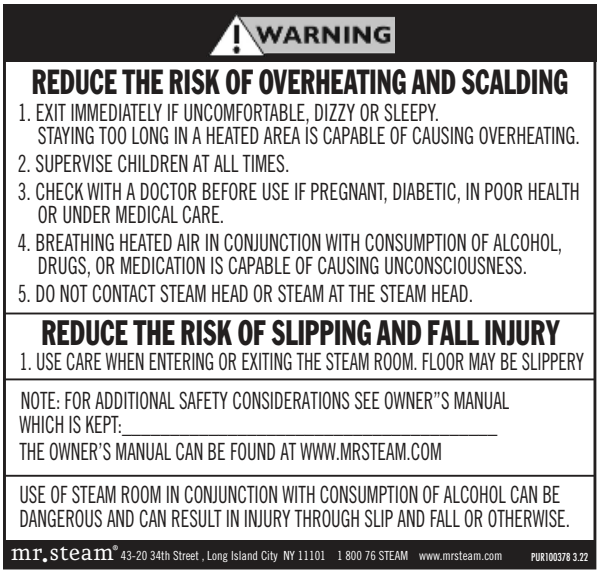
WARNING

REDUCE THE RISK OF OVERHEATING AND SCALDING

1. EXIT IMMEDIATELY IF UNCOMFORTABLE, DIZZY OR SLEEPY. STAYING TOO LONG IN A HEATED AREA IS CAPABLE OF CAUSING OVERHEATING.
2. SUPERVISE CHILDREN AT ALL TIMES.
3. CHECK WITH A DOCTOR BEFORE USE IF PREGNANT, DIABETIC, IN POOR HEALTH OR UNDER MEDICAL CARE.
4. BREATHING HEATED AIR IN CONJUNCTION WITH CONSUMPTION OF ALCOHOL, DRUGS, OR MEDICATION IS CAPABLE OF CAUSING UNCONSCIOUSNESS.
5. DO NOT CONTACT STEAM HEAD OR STEAM AT THE STEAM HEAD.

REDUCE THE RISK OF SLIPPING AND FALL INJURY

1. USE CARE WHEN ENTERING OR EXITING THE STEAM ROOM. FLOOR MAY BE SLIPPERY

NOTE: FOR ADDITIONAL SAFETY CONSIDERATIONS SEE OWNER"S MANUAL WHICH IS KEPT:_____
THE OWNER'S MANUAL CAN BE FOUND AT WWW.MRSTEAM.COM

USE OF STEAM ROOM IN CONJUNCTION WITH CONSUMPTION OF ALCOHOL CAN BE DANGEROUS AND CAN RESULT IN INJURY THROUGH SLIP AND FALL OR OTHERWISE.

mr.steam® 43-20 34th Street , Long Island City NY 11101 1 800 76 STEAM www.mrsteam.com PUR100378 3.22

Not actual size

- If an iSteamX control is installed outside the steam room a Remote Temperature Probe (PN MSTS) must be installed inside the steam room per installation instructions supplied with the Remote Temperature Probe. Failure to install according to instructions will result in an inoperative control and overheating of the steam room.

CAUTION Do not route iSteamX control wiring inside conduit together with power lines or close to hot water or steam piping. Doing so may result in an inoperative or hazardous installation. Do not alter or modify any Mr.Steam products including the steam generator or iSteamX control. Doing so may result in an inoperative or hazardous installation and will void the warranty.

IMPORTANT NOTES:

- Turn power to the steam generator OFF before connecting the control to the generator. Failure to turn the power off will result in an inoperable control.
- Do not operate the iSteamX control with other than a Mr.Steam iSteamX compatible steam generator. Mr.Steam residential steam generators with serial numbers lower than 1174000, or any other brand of steam generator are not to be operated with iSteamX controls. Doing so may result in an inoperative installation. If your generator's serial number is lower than 1174000 contact Mr.Steam Technical Service for up-grade options and components to enable your steam generator to function with iSteamX.
- This document contains important safety, operation and maintenance information. Leave this document with the homeowner. Do not discard this document.
- Discontinue use of the steam generator or control if the steam generator is damaged or otherwise not functioning properly. Doing so may result in an inoperative or hazardous installation
- Refer to the Steambath Generator Installation, Operation and Maintenance Manual for locating and installing the steamhead.

WARNING Do Not alter or modify any Mr.Steam products. Doing so may result in an inoperable or hazardous installation and will void the warranty.

Locating the Control

Determine the desired installation location of the control. The iSteamX controls are designed to be installed inside or outside the steam room as a matter of personal preference. If the control is installed inside the steam room:

- Locate the control 4-5 feet above the floor near the bather seating area.
- The control features an integral temperature sensor. Locate the control in a location representative of the desired steam bathing temperatures. Do not locate the control above or near the steam head or direct steam emissions.
- Locate the control on a vertical wall.
- The control cable is 30 feet. Insure that the control and steam generator are located accordingly.

IMPORTANT NOTES:

- If required, contact Mr.Steam to purchase an optional 60' iSteamX control cable part number 104541-60.
- If the control is installed outside the steam room a Remote Temperature Probe Part Number MSTS must be installed inside the steam room. Refer to the MSTS installation manual before installing the control.
- Ensure Mr.Steam steam generator is iSteamX compatible and has a serial number 1174000 or higher.

STEP 1
Make a 1-1/4" diameter hole in the desired control location.

STEP 2
Route the control cable from the wall cutout to the iSteamX Hub. Plug in and thread the connector collar into the Hub at the location marked Control.

IMPORTANT NOTE: The connector is keyed, it will only connect one way.

IMPORTANT NOTE: The control cable should be in a dedicated 1" conduit to fucilitate installation and service. Be careful not to strain, staple, pinch or otherwise damage the control cable. Route cable as required to permit replacement. Do not route cable inside conduit together with power lines or close to hot water or steam piping.

Finish the iSteamX installation using the instructions on page 7.

Installation Instructions for iSteamX

STEP 1.
Mount the hub securely. The hub may be mounted in any orientation.

Plug the 30 foot generator cable into the generator and into the hub.

CAUTION Do not force or twist cable ends together. Forcing or twisting cable ends may damage the connectors.

Plug the 30 foot control cable into the hub and into the iSteamX. Thread to connector collars together.

Plug the hub's power supply into an outlet.

Important Note: iSteamX must have an Internet connection for some functions. iSteamX may be connected to Wi-Fi. If iSteamX is located in an area with a poor Wi-Fi signal, a LAN connection from the router can be plugged into the iSteamX HUB.

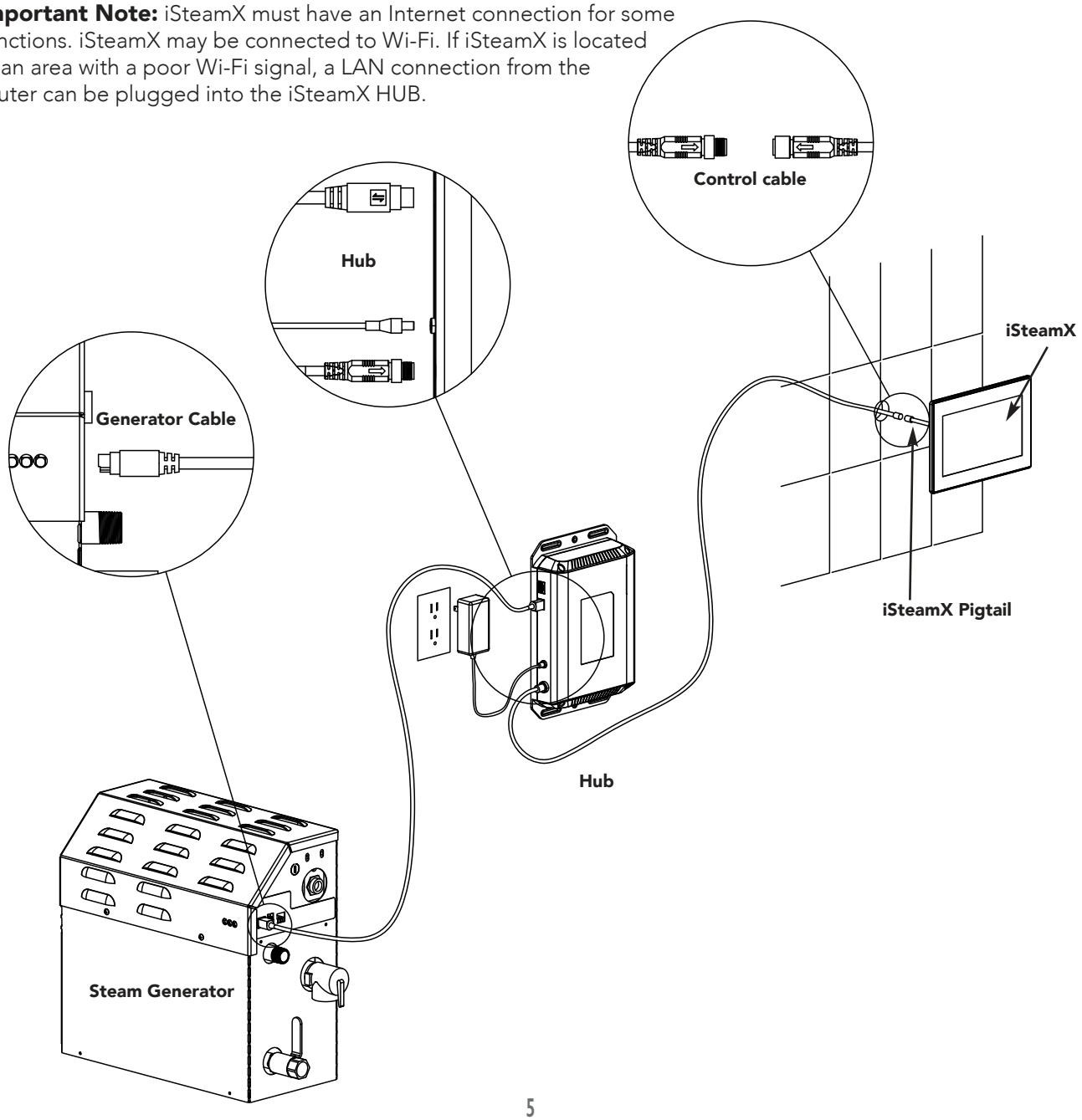

Installation Instructions for iSteamX (cont.)

STEP 2
Peel the double stick adhesive off the back of the iSteamX control (2a). Apply a bead of silicone around the rear of the iSteamX control to create a moisture seal (2b). Care must be taken to not pinch the cables. Ensure the control is level.

IMPORTANT NOTE: The control must be installed.

NOTE: The silicone supplied by Mr.Steam can be used to meet a variety of sealing and gasketing. It cures to silicone rubber and adheres to glass, wood, metal, porcelain, ceramic tile, painted surfaces, many plastics and rubber. Surfaces must be clean and dry. Apply thin layer of product. Fit together and support if necessary. Allow excess material to cure, then trim with a sharp blade. Sealant "skins" in 5 minutes, dries to touch in 1 hour. Fully cures and bonds in 24 hrs.

IMPORTANT NOTE: Do not apply excessive amounts of silicone. Do not apply silicone to any other parts of the control including the adhesive gasket. Ensure the mounting surface is clean and dry as required for good adhesion. Hold the control with the arrow on the screen protector facing up and press the control against the wall until the adhesive sticks and holds firmly. Control may have to be supported or secured until the silicone has cured for 24 hours.

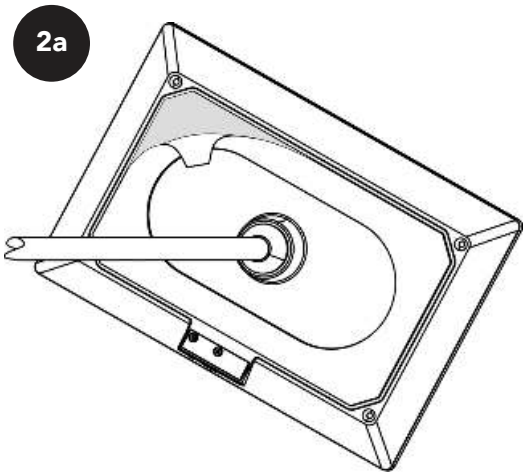

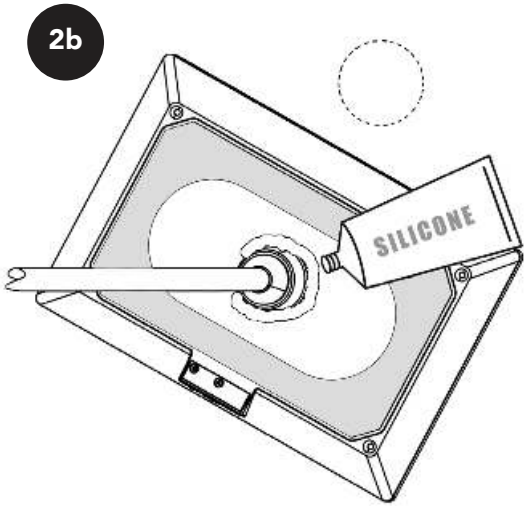

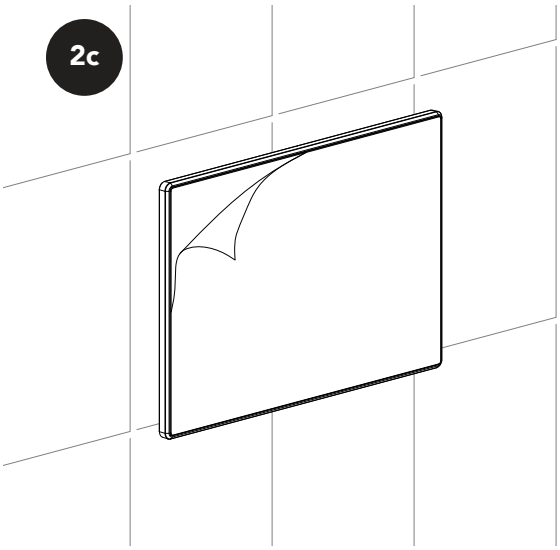

mr.steam®

HOMEOWNER SECTION

READ ME FIRST!

WARNING As you follow these instructions, you will notice warning and caution symbols. This blocked information is important for the safe and efficient installation and operation of this generator. These are types of potential hazards that may occur during installation and operation:

WARNING Indicates a potentially hazardous situation, which, if not avoided, could result in death or serious injury.

CAUTION Indicates a potentially hazardous situation, which, if not avoided may result in minor or moderate injury or product damage.

IMPORTANT NOTE: This highlights information that is especially relevant to a problem-free installation.

All information in these instructions is based on the latest product information available at the time of publication. Mr.Steam any time without notice.

When installing and using this electrical equipment, basic safety precautions should always be followed, including the following:

IMPORTANT SAFETY INSTRUCTIONS

1. **READ AND FOLLOW ALL INSTRUCTIONS**
2. **WARNING** Do not permit children under the age of 16 to use this steambath.
3. **WARNING** Steam is hot and can cause injury or death if improperly used. Steam rooms contain steam and elevated temperatures. Please read and observe all warnings in this manual before installing or using a steam room.
4. **WARNING** To reduce the risk of injury:
   - **A.** The wet surfaces of steam enclosures may be slippery. Use care when entering or leaving.
   - **B.** The steam head is hot. Do not touch the steamhead and avoid the steam near the steamhead.
   - **C.** Prolonged use of the steam system can raise excessively the internal human body temperature and impair the body's ability to regulate its internal temperature (hyperthermia). Limit your use of steam to 10-15 minutes until you are certain of your body's reaction.
   - **D.** Excessive temperatures have a high potential for causing fetal damage during the early months of pregnancy. Pregnancy or possibly pregnant women should consult a physician regarding correct exposure.
   - **E.** Obese persons and persons with a history of heart disease, low or high blood pressure, circulatory system problems, or diabetes should consult a physician before using a steambath.
   - **F.** Persons using medication should consult a physician before using a steambath since some medication may induce drowsiness while other medications may affect heart rate, blood pressure and circulation.

SAVE THESE INSTRUCTIONS

HYPERTHERMIA occurs when the internal temperature of the body reaches a level several degrees above the normal body temperature of 98.6° F. The symptoms of hyperthermia include an increase in the internal temperature of the body, dizziness, lethargy, drowsiness, and fainting. The effects of hyperthermia include:

a) Failure to perceive heat;

b) Failure to recognize the need to exit the steambath;

c) Unawareness of impending risk;

d) Fetal damage in pregnant women;

e) Physical inability to exit the steambath; and

f) Unconsciousness.

WARNING The use of alcohol, drugs, or medication can greatly increase the risk of hyperthermia.

WARNING The peel and stick warning label located in the steam bath generator manual is an essential part of providing a safe environment for steam room users. The peel and stick warning label must be applied to the wall of the shower or steam enclosure, at a point that is visible to all users. Failure to install this sticker may result in serious injury or death.

The location where this owner's manual is kept shall be written in the space provided on the label using permanent ink.

For a replacement warning label contact MrSteam customer service at 1-800-76-STEAM or hello@mrsteam.com

WARNING

REDUCE THE RISK OF OVERHEATING AND SCALDING

1. EXIT IMMEDIATELY IF UNCOMFORTABLE, DIZZY OR SLEEPY. STAYING TOO LONG IN A HEATED AREA IS CAPABLE OF CAUSING OVERHEATING.
2. SUPERVISE CHILDREN AT ALL TIMES.
3. CHECK WITH A DOCTOR BEFORE USE IF PREGNANT, DIABETIC, IN POOR HEALTH OR UNDER MEDICAL CARE.
4. BREATHING HEATED AIR IN CONJUNCTION WITH CONSUMPTION OF ALCOHOL, DRUGS, OR MEDICATION IS CAPABLE OF CAUSING UNCONSCIOUSNESS.
5. DO NOT CONTACT STEAM HEAD OR STEAM AT THE STEAM HEAD.

REDUCE THE RISK OF SLIPPING AND FALL INJURY

1. USE CARE WHEN ENTERING OR EXITING THE STEAM ROOM. FLOOR MAY BE SLIPPERY

NOTE: FOR ADDITIONAL SAFETY CONSIDERATIONS SEE OWNER"S MANUAL WHICH IS KEPT:_____

THE OWNER'S MANUAL CAN BE FOUND AT WWW.MRSTEAM.COM

USE OF STEAM ROOM IN CONJUNCTION WITH CONSUMPTION OF ALCOHOL CAN BE DANGEROUS AND CAN RESULT IN INJURY THROUGH SLIP AND FALL OR OTHERWISE.

mr.steam® 43-20 34th Street , Long Island City NY 11101 1 800 76 STEAM www.mrsteam.com PUR100378 3.22

Not actual size

Operating Instructions

WARNING Set the steam bathing duration and temperature according to personal preference, however it is highly recommended to begin steam bathing at a low temperature setting to gauge comfort and safety levels. Set the duration at 10 minutes maximum to gauge comfort and safety levels. This will allow the steam generator to heat up and begin producing steam.

Stand-By Screen

Touch anywhere on the clock screen to wake up the control

Start Screen

Press the **START** button to turn the steam generator on. If you had selected a user profile and program when the control was woken up they system will start with the saved parameters. Steam will begin to slow a few minutes after the START button is pressed. The time required for the steam room to reach steam bathing temperature depends on the steam room construction and steam generator specifications

Program Selection

User settings can be adjusted two ways, while steam is running drag the dashboard up from the bottom of the screen. AromaSteam can be turned **ON/OFF**, ChromaSteam can be turned **ON/OFF** and color adjusted and the room temperature can be adjusted.

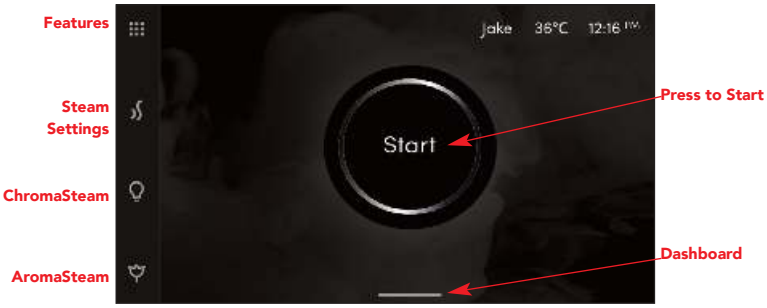

Steam Settings

Steam settings can also be adjusted by tapping the Steam Settings icon on the main screen. From the steam setting screen select either Temperature or Duration. To adjust temperature use the + and – buttons. To adjust duration swipe the time up and down. To return to the main screen tap the **X** in the upper right.

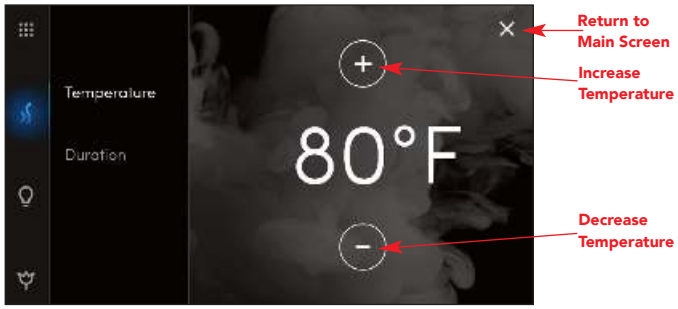

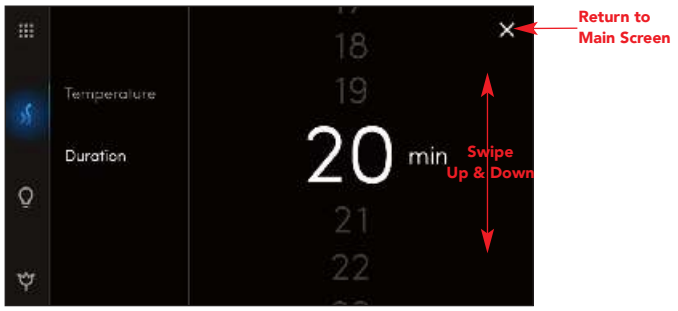

ChromaSteam

The ChromaSteam is an optional accessory that activates colored lights in the steam room. Press the ChromaSteam button to access the dashboard. The light is turned **ON/OFF** from the interface. Touch anywhere on the color wheel to select that color. To adjust brightness, use the slider on the bottom of the ChromaSteam dashboard. *(Note: Brightness cannot be adjusted in automatic color changing modes)*

Press the discrete color selection button to pick from a preselected set of colors or one of the two color changing modes.

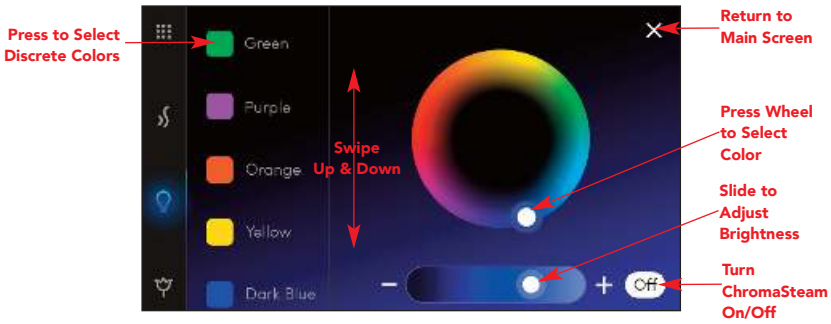

AromaSteam

The AromaSteam is an optional accessory that automatically infuses aromatic oils into the steam flow. Press the AromaSteam button to bring up that AromaSteam dashboard

Apps

iSteamX must be connected to WiFi to use apps
iSteamX must be paired with a Mr.Steam Audio@Home to hear audio from apps iSteamX includes a preinstalled selection of popular entertainment apps. Apps cannot be added or removed from iSteamX. The user interface of the preinstalled Apps may differ slightly from those apps installed on Smartphones. User accounts for the 3rd party apps are required to use some/ all of their features.

Access Apps by pressing the Features icon.

When apps are running they can be closed by pressing the X icon or minimized by pressing the <.

Only one App can run at a time. An open app will automatically close if another app is opened.

User Profiles & Setting

User profiles are found in the features menu. Press Add Profile to create a user profile. Once a user profile is created, it can be made active by tapping the profile name. User profiles can be deleted by pressing the trashcan.

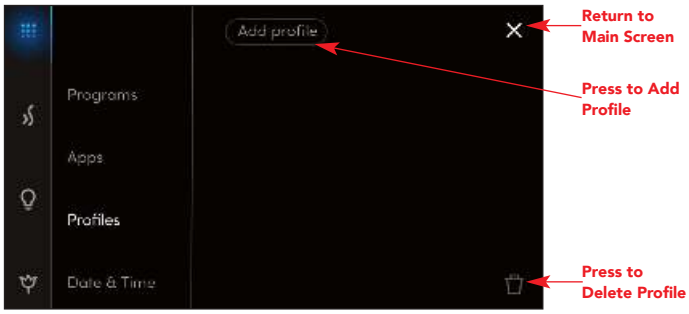

User Programs

In the features menu select a profile before creating a program. To create a program press the add program button. A keyboard will open and the user will be prompted to name a program.

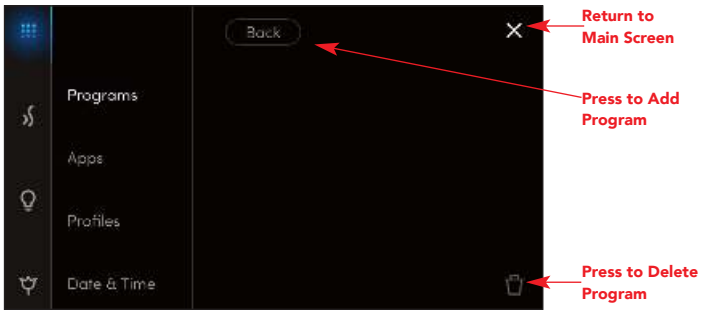

Each program can include a setting for steam and if equipped color of ChromaSteam. Select which options to include in the program by checking the box. Navigate through the set up by pressing the **NEXT** button

System Settings

Password Lock

The password lock can help prevent unintentional use of the steambath. Please refer to the steam generator installation, operation and maintenance manual before using the steambath. The passcode lock cannot ensure unintentional use of the steambath

To turn the password lock on, press **ON** and then enter a number when prompted and confirm to save. The next time iSteamX is turned on the user will be prompted to enter the password.

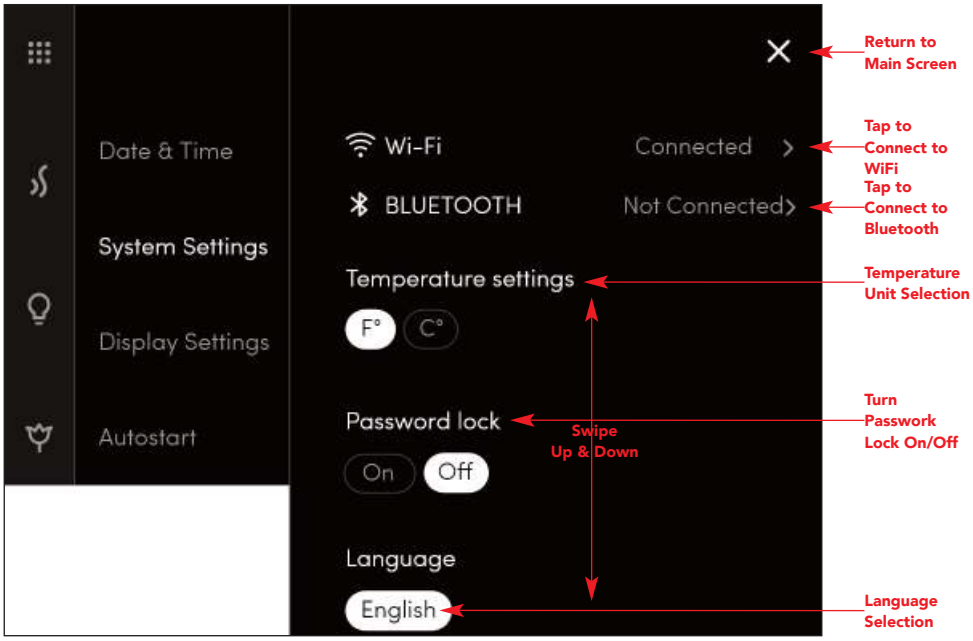

AutoStart

AutoStart will automatically turn the steam generator on at your preset time. Activating the steam in an occupied room may subject persons to hazards described in this manual. Only activate the steambath if the steam room door is closed. Activating or using the steambath with an open door may cause property damage or injury to persons outside of the steam bath.

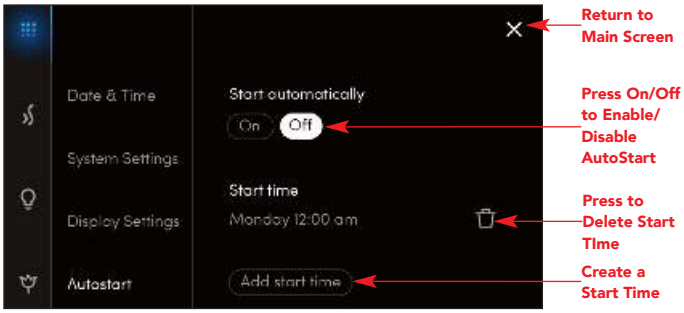

The AutoStart feature can be used to turn on the steambth at a predetermined time. Select the day(s) of the week and the time of day you would like to turn the steam bath on.

When AutoStart starts your steambath it will allow the steambath to run for only 10 minutes. To continue steam bathing press the continue button. If the continue button is pressed AutoStart will remain active.
To stop the steam bath press the **STOP** button

If the **STOP** button or 10 minute time out turns the steam generator off. AutoStart will automatically be deactivated.

To create an AutoStart time tap the Add Start Time button. Select the start time and day(s) of the week for AutoStart. A maximum of 8 start times can be programmed. To delete a start time, press the trash icon.

To turn AutoStart on press the **ON** button.

SPAH2O

START UP OPERATION

CAUTION For proper operation, a learning mode bust be initiated from the iSteamX prior to using SPAH2O.

CAUTION Ensure any unused shower valve outlets are capped prior to using the learning mode

SPAH2O is compatible with iSteamX controls with software version 1.7.70 and higher. Contact MrSteam Technical Service at 1-800-767-8326 Ext. 1120 regarding software updates.

Shower Learning

From the start screen, navigate to the features menu by pressing the features icon

Navigate to Shower Setup in features menu and press Shower Learning. The hot and cold supply must be on and the shower fixtures MUST be connected. The control will display a message that says the shower learning is in progress. While the learning is taking place the outputs will open and close to learn the flow characteristics of each fixture.

All drawing are for illustrative purposes only

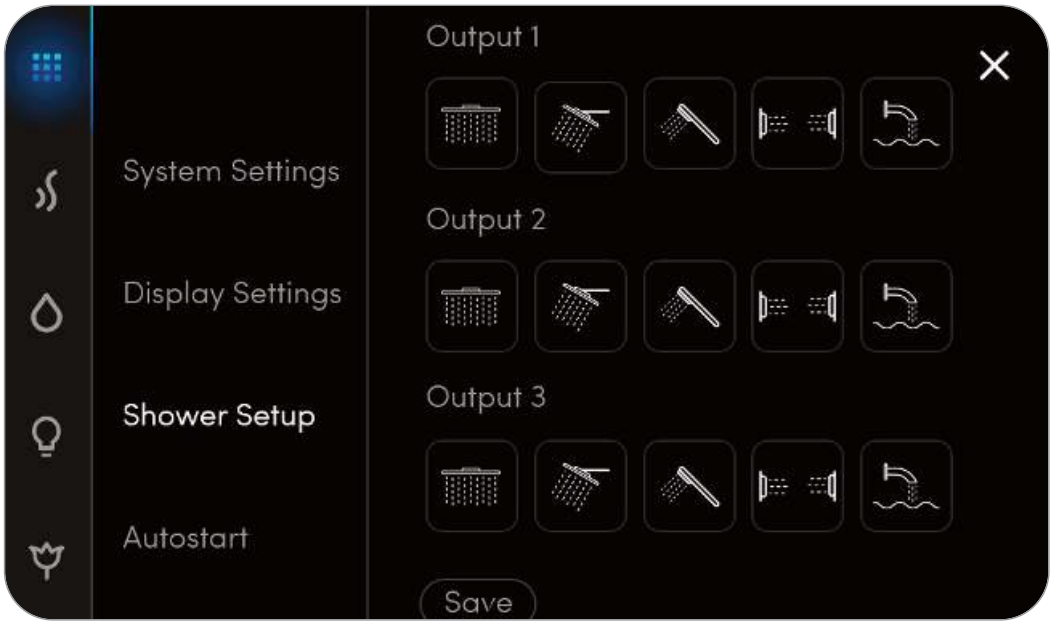

Once the shower leaning has been completed, each output can be assigned a fixture icon (note each may only be used once) Select the icon the corresponds to the output, once the selections are made press SAVE. Note: If an output is not plumbed you will not be able to make a selection for it

OPERATION

Navigate to the shower user interface using the steam / shower toggle

OPERATION

Press the ON/OFF button to start and stop the shower. The shower value will always start output 1.

Press the water droplet icon to navigate to the temperature/flow adjustment screen

SPAH20 can have 2 outlets open at a time. To open a second outlet press the icon representing that output. Pressing the icon of an active outlet will turn it off. If two outlets are open, pressing the icon for a 3rd outlet will close the two open outlets and open the third

To turn the SPAH2O off, turn off the individual outlets or press the ON/OFF button.

IMPORTANT NOTE: SPAH2O automatically turns off after 20 minutes

All drawing are for illustrative purposes only

OPERATION

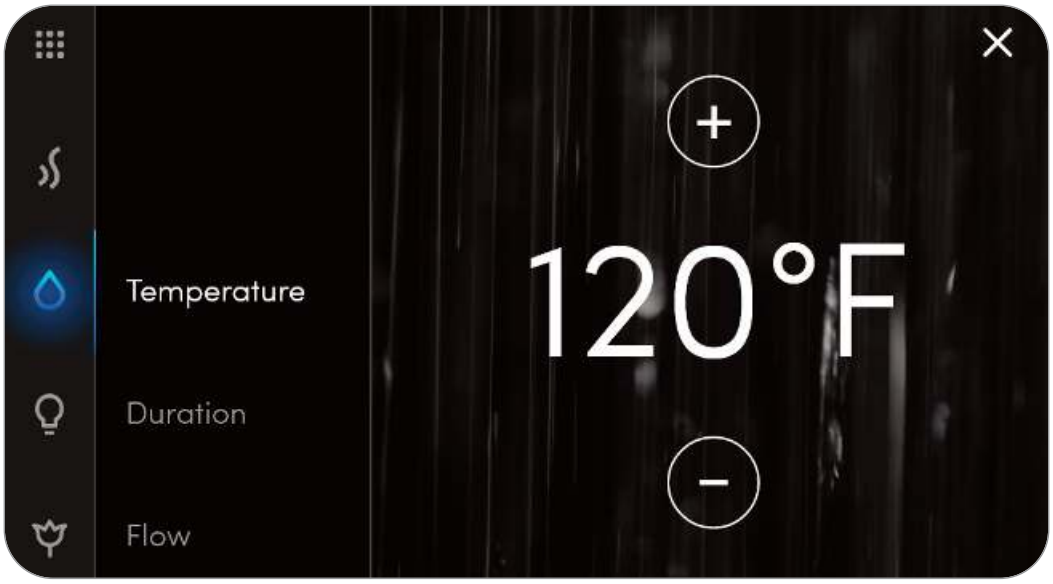

Tap Temperature to adjust the temperature of the shower. Use the + and – buttons to adjust the temperature.
NOTE: The maximum allowable set point temperature is 118 *F. iSteamX will not allow a temperature to be set above what the valve is capable of based on water supply temperatures and fixtures flowrates.

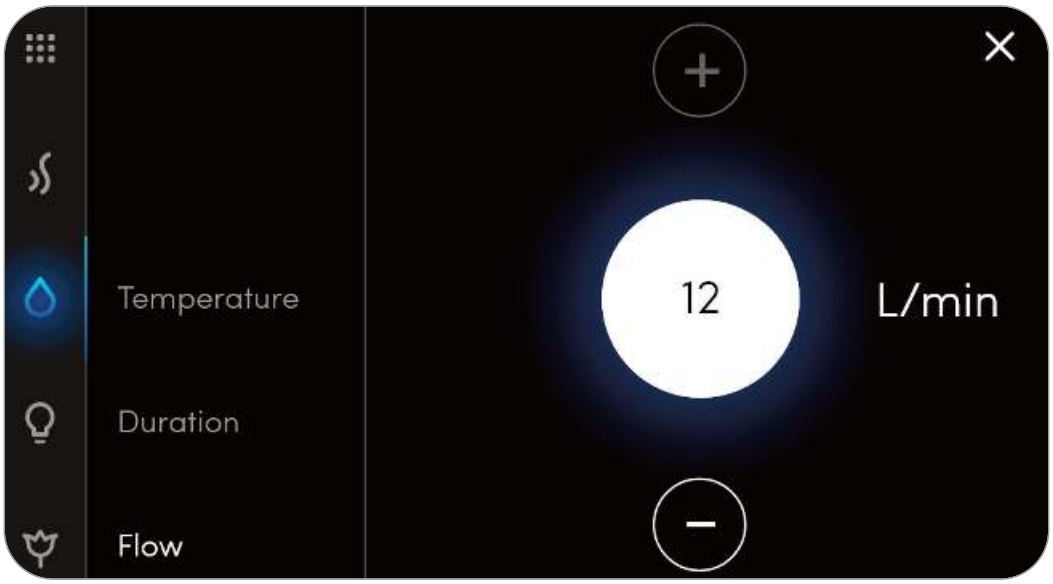

Tap Flow to adjust the volume of the shower. Use the + and – buttons to adjust the volume.

Note: maximum allowable flow rate is 5.5 gpm (21 L/min) for one output and a total of 7.4 gpm (28 L/min) when two outputs are open iSteamX will not allow the user to set a flow rate higher than the rating of the fixture. iSteamX will not allow a flow rate which is not achievable based on the temperature setting and in supply temperatures and flow rates.

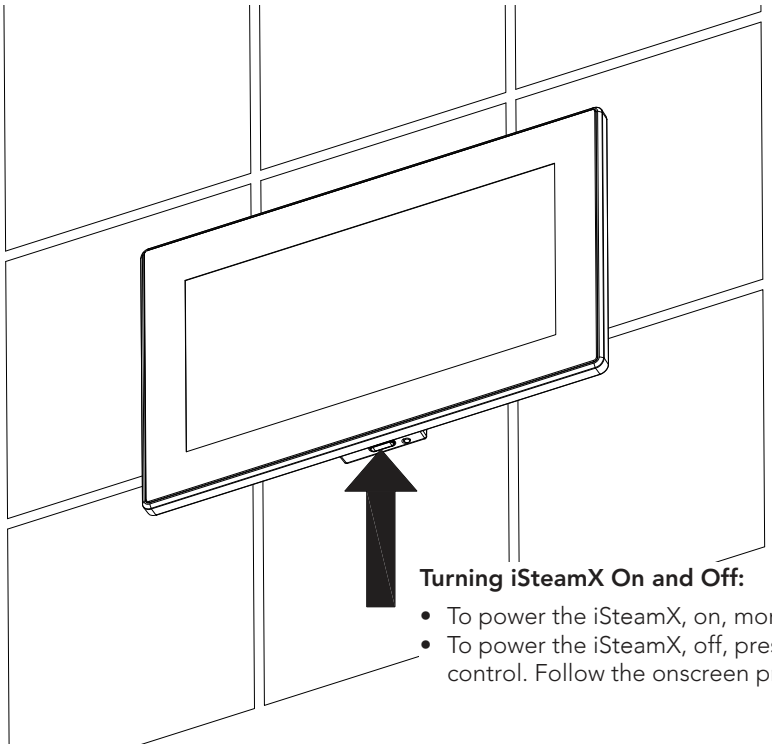

Turning iSteamX On and Off:

- To power the iSteamX, on, momentarily press the button on the bottom edge.
- To power the iSteamX, off, press and hold the button on the bottom edge of the control. Follow the onscreen prompts for power the iSteamX, off

Care Tips

Use only mild soap and water on a soft cloth to clean the control. Do not use abrasive cleansers.

Safety & Operating Information

WARNING A peel and stick warning sticker is provided in the Mr.Steam steam generator Installation, Operation and Maintenance Manual. This manual is provided with every steam generator. The warning sticker must be read and permanently affixed in a conspicuous location near the steam room. Failure to read and affix this warning sticker in a conspicuous location may result in serious injury or death. Please call Mr.Steam at 800 767-8326 for a free replacement or if you have any questions regarding the warning sticker.

WARNING Set the steam bathing duration and temperature according to personal preference, however it is highly recommended to begin steam bathing at a low temperature setting to gauge comfort and safety levels. Set the duration at 10 minutes max. to gauge comfort and safety levels. This will allow the steam generator to heat up and begin producing steam.

CAUTION Do not use any iSteamX control without reading and understanding the Mr.Steam steam generator Installation and Operation Manual (PN 100472). Failure to read and understand these instructions may result in an inoperative or hazardous installation.

CAUTION If an iSteamX control is installed outside the steam room a Remote Temperature Probe (PN MSTS) must be installed inside the steam room per installation instructions supplied with the Remote Temperature Probe. Failure to install according to instructions will result in an inoperative control and overheating of the steam room.

Warranty

To view or download the MrSteam Control Warranty and register your product go to: **blog.mrsteam.com/wr**

FCC Statement:

Any Changes or modifications not expressly approved by the party responsible for compliance could void the user's authority to operate the equipment.

This device complies with part 15 of the FCC Rules. Operation is subject to the following two conditions:

1. This device may not cause harmful interference, and
2. This device must accept any interference received, including interference that may cause undesired operation.

Note: This equipment has been tested and found to comply with the limits for a Class B digital device, pursuant to part 15 of the FCC Rules. These limits are designed to provide reasonable protection against harmful interference in a residential installation. This equipment generates uses and can radiate radio frequency energy and, if not installed and used in accordance with the instructions, may cause harmful interference to radio communications. However, there is no guarantee that interference will not occur in a particular installation. If this equipment does cause harmful interference to radio or television reception, which can be determined by turning the equipment off and on, the user is encouraged to try to correct the interference by one or more of the following measures:

- Reorient or relocate the receiving antenna.
- Increase the separation between the equipment and receiver.
- Connect the equipment into an outlet on a circuit different from that to which the receiver is connected.
- Consult the dealer or an experienced radio/TV technician for help.

This transmitter must not be co-located or operating in conjunction with any other antenna or transmitter. This equipment complies with FCC radiation exposure limits set forth for an uncontrolled environment. This equipment should be installed and operated with minimum distance 20cm between the radiator & your body.

ISED Statement:

This device contains licence-exempt transmitter(s)/receiver(s) that comply with Innovation, Science and Economic Development Canada's licence-exempt RSS(s). Operation is subject to the following two conditions:

1. This device may not cause interference.
2 This device must accept any interference, including interference that may cause undesired operation of the device.

L'émetteur/récepteur exempt de licence contenu dans le présent appareil est conforme aux. CNR d'Innovation, Sciences et Développement économique Canada applicables aux appareils radio exempts de licence. L'exploitation est autorisée aux deux conditions suivantes:

1. L'appareil ne doit pas produire de brouillage;
2. L'appareil doit accepter tout brouillage radioélectrique subi, même si le brouillage est susceptible d'en compromettre le fonctionnement.

This transmitter must not be co-located or operating in conjunction with any other antenna or transmitter. Cet émetteur ne doit pas être colocalisé ou fonctionner en conjonction avec une autre antenne ou un autre émetteur. The device meets the exemption from the routine evaluation limits in section 2.5 of RSS-102 and compliance with RSS-102 RF exposure, users can obtain Canadian information on RF exposure and compliance. This equipment should be installed and operated with a minimum distance of 20 centimeters between the radiator and your body.

Le dispositif rencontre l'exemption des limites courantes d'évaluation dans la section 2.5 de RSS 102 etla conformité à l'exposition de RSS-102 rf, utilisateurs peut obtenir l'information canadienne surl'exposition et la conformité de rf. Cet émetteur ne doit pas être Co-placé ou ne fonctionnant en même temps qu'aucune autre antenne ouémetteur. Cet équipement devrait être installé et actionné avec une distance minimum de 20 centimètres entre le radiateur et votre corps.

Description of Operation

Description

The product is a 7" Panel-PC based on Rockchip PX30 Cortex 35 chipset platform with Android 10.

The central processor units include the CPU, DDR memory and flash.

The PX30 is the main application processor, and SAMSUNG 2GB DDR3 system memory at PCBA. The SAMSUNG 16G eMMC is the system internal storage for OS or other data. The wireless unit includes WIFI/BT. The 6221A-SRC module provides the highest level of integration for a mobile or handheld wireless system with integrated IEEE 802.11 a/b/g/n/ac standard and Bluetooth® 4.2.

The panel-PC will starting up automatically when powered on, the panel PC will display the boot up logo.

The system will discontinue transmission automatically and make the module enter standby mode with no connection. It cannot send and receive any data to preclude the transmission of control or signaling information or the use of repetitive codes used by certain digital technologies to complete frame or burst intervals.

Technical Specifications

WIFI Module

- Operation frequency: 2.412 GHz ~ 2.462 GHz (2.4 GHz ISM Band), 5.180 GHz ~ 5.240 GHz, 5.745 GHz ~ 5.825 GHz (5.0 GHz ISM Band).
- WLAN function: Supports 802.11a, 802.11b, 802.11g/n, 802.11ac
- Modulation Type: Supports DBPSK/DQPSK/CCK(DSSS), BPSK/QPSK/16QAM/64QAM(OFDM), BPSK/QPSK/16QAM/64QAM/256QAM(OFDM)
- Modulation type Transfer Rate (Mbps):
  - o 802.11a : 6, 12, 54Mbps
  - o 802.11b : 1, 11Mbps
  - o 802.11g : 6, 12, 54Mbps
  - o 802.11n: 6.5, 13, 19.5, 26, 39, 52, 58.5, 65Mbps
- Antenna Type: PCB
- Gain: 1.3dBi for 2.4G and 1.3dBi for 5G.

Bluetooth Features

- Compliant with Bluetooth4.2 specification
- Operation frequency: 2402MHz~2480MHz
- Modulation Type: GFSK, π/4DQPSK, 8DPSK
- Antenna Type: PCB
- Gain: 1.3dBi

Crystal

Main board: 24MHz for CPU, 32.768KHz for PMU, 25MHz for PHY.

www.mrsteam.com

Products, information and specifications are subject to change without notice.
Please call Technical Support at 1.800.76.STEAM (East Coast) or 1.800.72.STEAM (West Coast) for more information.

NOTICE The model and serial number is printed on the data plate on the front of the steam bath generator. Have this information available when contacting Technical Service.

mr.steam® | hello@mrsteam.com | www.mrsteam.com

43-20 34th Street, Long Island City, NY 11101 TEL: 1 800 76 STEAM I 9410 S. La Cienega Blvd. Inglewood CA 90301 TEL: 1 800 72 STEAM

2020 © MrSteam and des., A Lifetime of Pleasure, AirTempo, AromaFlo, AudioWizard, AutoFlush, AutoSteam, Butler Package, ChromaSteam, Clean Steam...Every Time, Club Therapy, CT Day Spa, Digital 1, Express Steam, Feel Good Inc., From Bathroom to Spa, HomeWizard, iButler, iGenie, iSpa Package, iSteam, iTempo, iTempo/Plus, Linear Steamhead, Making Wellness a Way of Life, Music Therapy, My Steam, SmartSizing, Spa Package, Steam Genie, Steam on Demand, Steam in a Box, Steam@Home, SteamStart, SteamTherapy, MrSteam, Tala, Tala Bath & Body, Tempo, The Intelligent Steambath, Valet Package, and Virtual Spa System are registered trademarks of MrSteam.

INSTALLATION INSTRUCTIONS

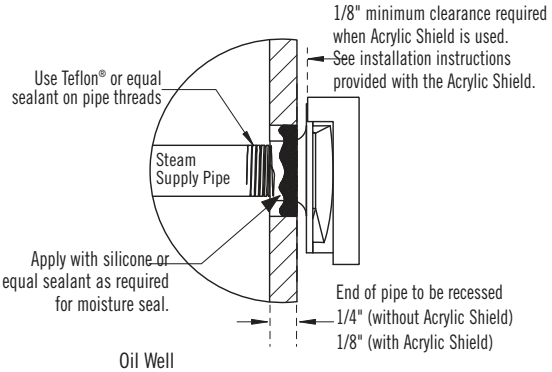

IMPORTANT: See the Installation and Operation Manual provided with the steam generator for additional important steamhead & control installation and operation information.

Installation: Steam Head (3/4" NPT)

CAUTION **INSTALLER:** Because the steam head and direct steam emissions are very hot, locate the steam head where incidental contact by bather with the steam head or direct steam emission cannot occur.

STEP 1 Locate steam head 6-12 inches above floor, except for:

1. Tub/shower enclosures, install 6 inches above tub top edge.
2. For enclosures with acrylic or other non-heat resistant flooring install Acrylic Shield Part Number 103938.
3. To prevent door seals from deteriorating do not locate the steam head where direct steam emission would contact door seals.

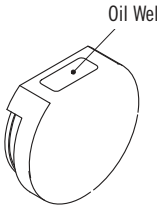

STEP 2 Install steamhead with the oil well facing up as shown. Hand tightening is sufficient when teflon or equal pipe thread sealing compound is used.

IMPORTANT NOTE: to preserve steam head finish, do not use wrench or other tools to tighten. **DO NOT** use abrasive cleansers or chemicals. Use only water with mild soap and a non-abrasive sponge.

CAUTION Consult with supplier of acrylic, fiberglass and other non-heat resistant enclosures for recommended steamhead location. Use Acrylic Shield part number MS-103938. See instructions provided with steam shield.

STEP 3 Secure a bronze drop ear fitting to a header and run a 3/4" copper steamline from the steam generator to the drop ear fitting. Install a temporary nipple (6" or longer)in the drop ear fitting to locate the steamhead after the wall is finished.

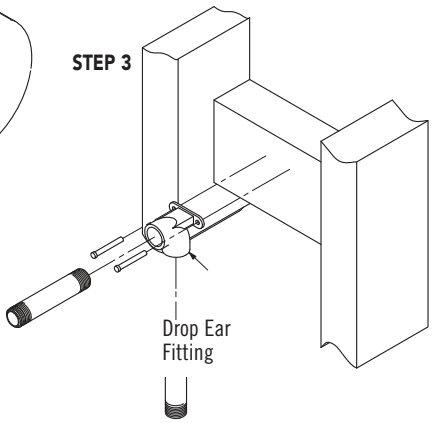

STEP 4 After the wall has been finished, mark on the nipple where the surface of the wall is. Remove the nipple and measure the portion that was in the wall (the end to your mark). Subtract 1/4" from that dimension and select a brass nipple of that length to finish the installation.

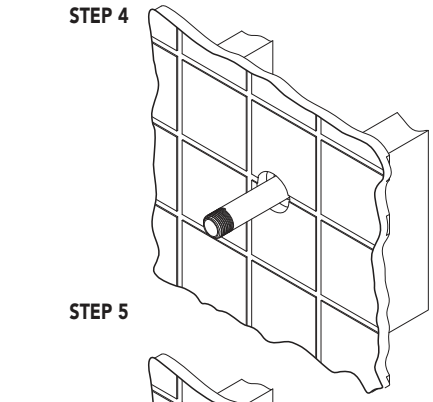

STEP 5 Wrap teflon tape around the threads of the new nipple and screw the nipple into the steamhead. Do not use wrenches or tools which would damage the steamhead's finish. Wrap teflon tape around the threads of the nipple and screw the nipple and steamhead assembly you just made into the drop ear fitting in the wall. The steamhead should be flush with the wall and the well must be facing up.

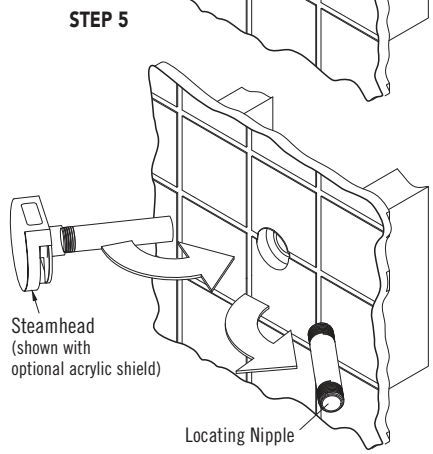

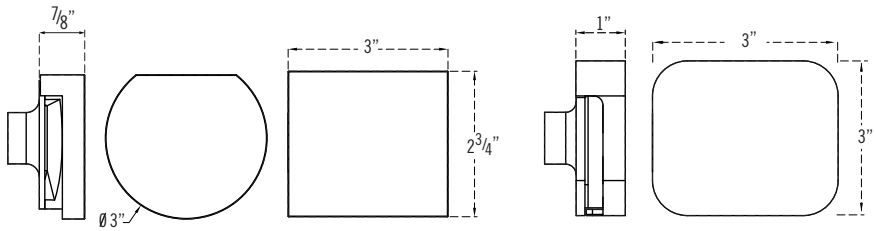

All drawings are for illustrative purposes only

mr.steam® hello@mrsteam.com www.mrsteam.com
43-20 34th Street, Long Island City, NY 11101 tel: 1 800 76 STEAM
9410 S. La Cienega Blvd. Inglewood CA 90301 tel: 1 800 72 STEAM

Installation, Operation and Maintenance Manual

Linear Steam Head

Residential Model: 104480

IMPORTANT: Leave this material with the homeowner.

mr.steam® | Feel Good Inc.®

TABLE OF CONTENTS

Important Safety Information 1-2

Installer Section:

Box Contents 3

Dimensional Information 3

General Installation 4

Faceplate 5

Installer and Home Owner Section:

Steam Emission Zone 6

Diverter 7

AromaTray 8

Replacement Parts 9

Warranty 9

Essential Oils 10

mr.steam® hello@mrsteam.com • www.mrsteam.com

43-20 34th Street, Long Island City, NY 11101 tel: 1 800 76 STEAM

9410 S. La Cienega Blvd. Inglewood CA 90301 tel: 1 800 72 STEAM

Linear Steam Head®

mr.steam®

Installer Section

Model 104480

READ ME FIRST! As you follow these instructions, you will notice **CAUTION** and **NOTICE** symbols. This information is important for the proper, safe and trouble free installation of the Linear Steam Head. These are types of potential hazards that may occur if installation instructions are not carefully followed:

CAUTION This signals a situation where injury or property damage may occur if you do not follow instructions.

NOTICE This highlights information that is especially relevant to a problem free installation.

All information in these instructions is based on the latest information available at the time of publication. MrSteam reserves the right to make changes at any time without notice.

CAUTION The following general information should be used in conjunction with consultations with a qualified architect, designer and contractor in determining factors necessary in providing a suitable and safe steam room.

CAUTION This document contains important safety, operation and maintenance information. After installation leave these instructions with the homeowner. Do not discard this instructions. Failure to leave the instructions with the homeowner may result in property damage or personal injury.

CAUTION Use one or more Linear Steam Heads for MrSteam steam generator models MS90 – MS400 and MSSUPER1–MSSUPER3, SAH3000-SAH6000.

CAUTION Use two or more Linear Steam Heads for MrSteam steam generators Models MX4, MX5 and MX6. Failure to use two or more steam heads may result in steam head operation where incidental contact by the bather with direct steam emission may occur. Failure to use two or more steam heads may result in a leak within the wall cavity and cause problems associated with leaks, moisture and property damage from leaks. Failure to use two or more steam heads may result in a hazardous condition, scalding or personal injury.

CAUTION Do not use Linear Steam Head for any MrSteam steam generator that is not one of the following models: MS90 –MS400, MSSUPER1–MSSUPER3, SAH3000-SAH6000 or MX4 –MX6. Failure to follow these instructions may result in a leak within the wall cavity and cause problems associated with leaks, moisture and property damage from leaks. Failure to follow these instructions may result in a hazardous condition, scalding or personal injury.

CAUTION Do not use the Linear Steam Head with any steam system that is not a MrSteam steam system. Failure to follow these instructions may result in a leak within the wall cavity and cause problems associated with leaks, moisture and property damage from leaks. Failure to follow these instructions may result in a hazardous condition, scalding or personal injury.

CAUTION Because the steam head and direct steam emission are very hot, locate the steam head(s) where incidental contact by the user with the steam head(s) or direct steam emission cannot occur. Do not locate the steam head(s) in any location where the steam emission zone is near a seat,bench or any space occupied by any persons. Failure to following these directions may result in a hazardous condition, scalding or personal injury.

CAUTION Linear Steam Heads are for residential use only. Do not use any Linear Steam Heads for commercial installations or with commercial steam generators (including Day Spas). Using Linear Steam Heads for commercial installations or installations with commercial steam generators may result in a leak within the wall cavity and cause problems associated with leaks, moisture and property damage from leaks. Using Linear Steam Heads for commercial installations or installations with commercial steam generators may result in a hazardous condition, scalding or personal injury.

CAUTION Do not use the Linear Steam Head with any steam system that includes equipment or devices not supplied by MrSteam, including but not limited to water softeners. Failure to follow these instructions may result in a leak within the wall cavity and cause problems associated with leaks, moisture and property damage from leaks. Failure to follow these instructions may result in a hazardous condition, scalding or personal injury.

CAUTION Only install the linear steam head in a horizontal orientation as shown in fig 3. Failure to follow these instructions may result in a leak within the wall cavity and cause problems associated with leaks, moisture and property damage from leaks. Failure to follow these instructions may result in a hazardous condition, scalding or personal injury.

CAUTION Insulate the linear steam head and piping as required to prevent elevated temperatures, including within the wall cavity. Do not locate the steam head or plumbing near any materials, including wiring, devices, or products that may be adversely affected by elevated temperatures. Check with the manufacturer of materials, wiring, devices, or products for suitability for operation at elevated temperatures. Use only insulation rated for 212F or higher steam applications. Failure to follow these instructions may result in the damage or failure of materials, wiring, devices, or products. Failure to follow these instructions may result in leaks, and cause problems associated with leaks, moisture and property damage from leaks. Failure to follow these instructions may result in a hazardous condition, scalding or personal injury.

CAUTION Steambath controls feature an integral or remote temperature sensor that senses room temperature. Install the linear steam head in a location where steam emission will not come in direct contact with the control or remote temperature sensor. Failure to follow these instructions may result in poor temperature control, a hazardous condition, scalding or personal injury.

CAUTION Only use the supplied high temperature silicone sealant as required to create a permanent moisture seal. Do not seal the steam head with grout or any other material. Failure to follow these instructions may result in leaks, and cause problems associated with leaks, moisture and property damage from leaks.

CAUTION The linear steam head must be installed by a qualified and licensed plumber. Failure to use a qualified and licensed plumber may result in a leak within the wall cavity and cause problems associated with leaks, moisture and property damage from leaks. Failure to follow these instructions may result in elevated temperatures, a hazardous condition, scalding or personal injury.

CAUTION Do not use black iron, galvanized, or plastic pipe for the steam line. Use only properly rated brass pipe or copper tubing in accordance with national and local plumbing codes. Using any piping material other than properly rated brass or copper piping may cause linear steam head damage and problems associated with leaks, moisture and property damage from leaks or steam.

CAUTION Plumb rigid copper tubing or brass pipe from the steam generator to the linear steam head. Plumbing must not form traps or valleys. Failure to follow these instructions may result in leaks, and cause problems associated with leaks, moisture and property damage from leaks. Failure to follow these instructions may result in a hazardous condition, scalding or personal injury.

CAUTION Do not modify or alter the linear steam head. Do not cover, block or insert any product that is not a MrSteam supplied linear steam head accessory with the linear steam head. Failure to follow these instructions may result in a leak within the wall cavity and cause problems associated with leaks, moisture and property damage from leaks. Failure to follow these instructions may result in a hazardous condition, scalding or personal injury.

CAUTION Do not disassemble the steam head. The steam head is shipped fully assembled and requires no additional assembly. Failure to follow these instructions may result in a leak within the wall cavity and cause problems associated with leaks, moisture and property damage from leaks.

CAUTION Before installing the linear steam head, read and follow the Installation and Operation Manual(s) provided with all system components (generator, controls, accessories...etc.). If the installation and operation manuals are not available go to www.mrsteam.com for an online copy, or contact MrSteam Customer or Technical Services at 800-767-8326 or 800-727-8326 for free copies. Failure to read and follow all the Installation and Operation Manuals may result in a leak within the wall cavity and cause problems associated with leaks, moisture and property damage from leaks. Failure to follow these instructions may result in inoperable system components, a hazardous condition, scalding or personal injury.

CAUTION Consult with the manufacturer of any non-heat resistant enclosures for elevated temperatures, steam, moisture compatibility or for suitability for use with steam. Failure to follow these instructions may result in the damage or failure of materials or products. Failure to follow these instructions may result in leaks, and cause problems associated with leaks, moisture and property damage from leaks. Failure to follow these instructions may result in a hazardous condition, scalding or personal injury.

CAUTION Do not install a Linear Steam Head in an acrylic/fiberglass tub or shower enclosure. Failure to follow these directions may cause problems associated with leaks, moisture and property damage from leaks. Failure to follow these instructions may result in elevated temperatures, a hazardous condition, scalding or personal injury.

CAUTION Do not locate the steam head where steam, elevated temperatures, moisture or water can contact any products, wall surfaces, materials, door seals, devices, electronics that are not designed for use with steam, elevated temperatures, moisture or water. Failure to follow these instructions may result in damage or improper operation of the products, wall surfaces, materials, door seals, devices or electronics.

CAUTION The optional diverter reduces the steam emission zone by redirecting steam up the wall above the steam head (see page 6). Installation of the diverter may result in the following:

- Changes to the steam distribution in the room
- Increase of the temperature of the wall and devices above the steam head
- Surface condensation patterns on the walls and ceiling

Always test the diverter to insure proper safety, installation and comfort.

NOTICE Carefully inspect the Linear Steamhead and packaging for shipping damage. In the event of shipping damage, please contact the carrier for claim information. Our customer service department can assist you with product replacement.

NOTICE Do not use abrasive cleansers or chemicals to clean the linear steam head. Use only water with mild soap and a non-abrasive sponge. The use of abrasive cleansers or chemicals will damage the finish on the linear steam head.

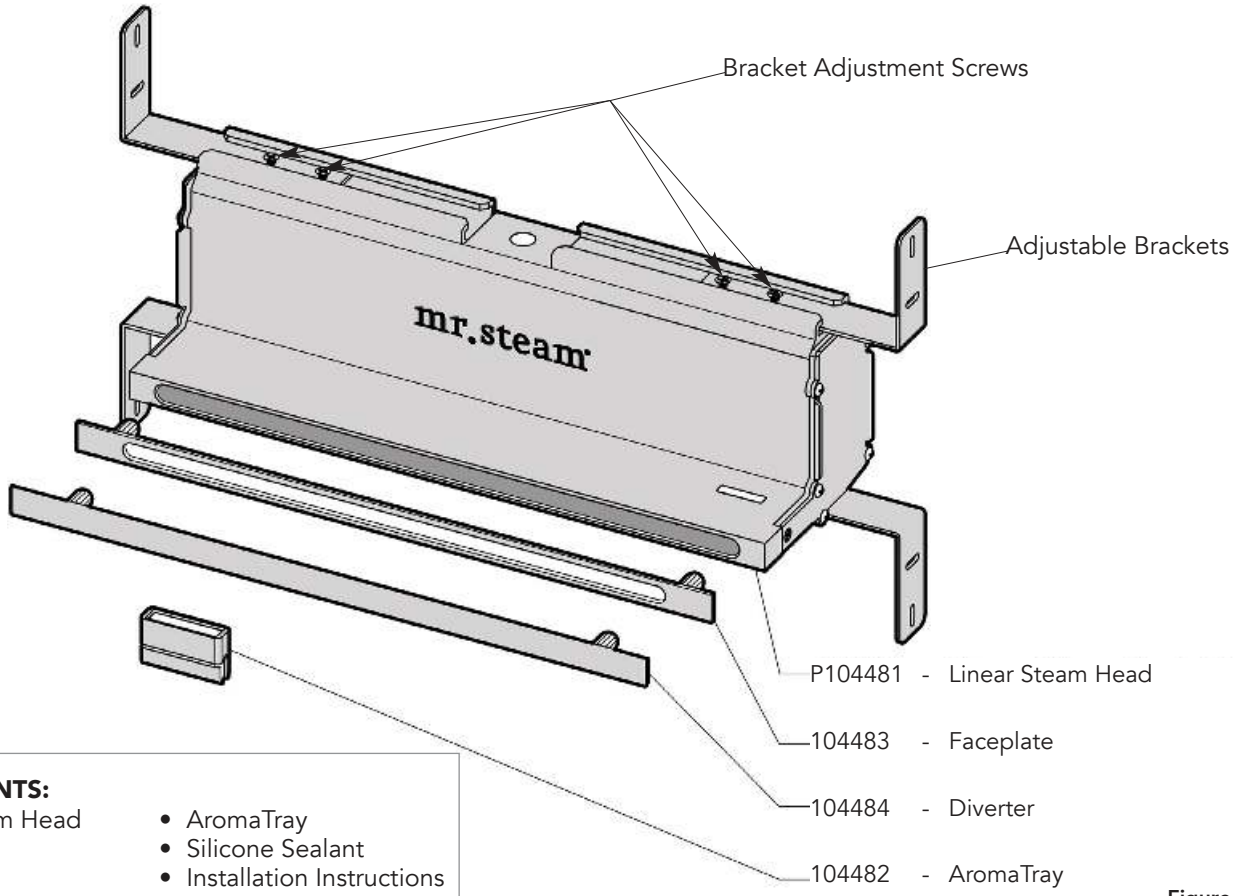

BOX CONTENTS:

- Linear Steam Head
- Faceplate
- Diverter
- AromaTray
- Silicone Sealant
- Installation Instructions

Figure 1

Dimensional Information

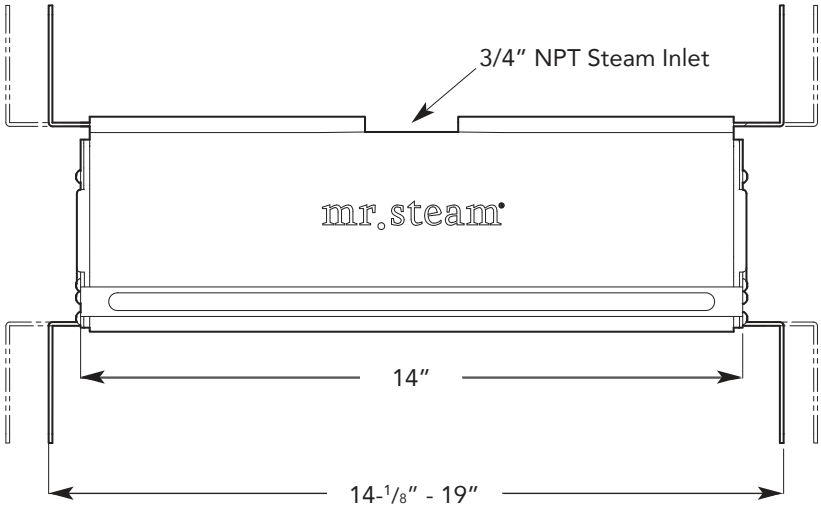

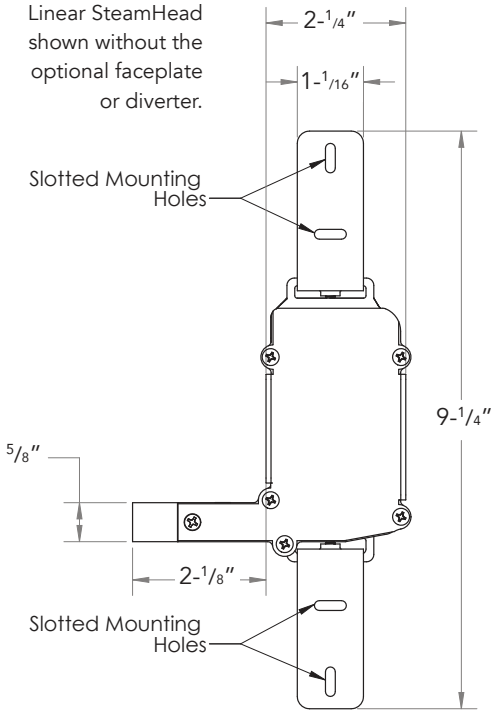

Figure 2

NOTE: ***Drawings are for illustrative purposes only.*** *Consult with qualified designer, architect or contractor for steam room construction.*

Steam Head Installation

STEP 1. Confirm proper stud spacing: The studs must have a minimum spacing of 14-1/8" and a maximum spacing 19". If the stud spacing is outside the required range then shim or otherwise reposition the studs as required.

CAUTION Installing the steam head between incorrectly spaced studs may result in damage to the steam head and result in a leak within the wall cavity and cause property damage.

STEP 2. Locate the steam head 6-12" above the finished floor. Locate the steam head where a steam bather can not come into contact with direct steam emissions. See page 6 for information on the steam emission zone.

CAUTION Steam is hot. Locate the steam head where a steam bather can not come into contact with direct steam emissions. Failure to follow these directions may result in a hazardous condition, scalding or personal injury.

STEP 3. Position the steam head between 2 properly spaced studs. Extend the adjustable brackets as required so the steam head fits snugly between two studs. Use a level to ensure the steam head is level (see Fig. 3). Tighten the eight bracket adjustment screws (supplied).

STEP 4. If the optional decorative faceplate is used, see the installation instructions for the optional faceplate on page 5. If the optional decorative faceplate is not used, position the steam head so that the steam head face will be flush with the finished wall face (see Fig. 4).

STEP 5. With the stem head properly positioned, with or without a decorative faceplate, provide eight screws as required to securely mount the steam head brackets to the studs.

CAUTION Failure to position the steam head face as instructed may result in improper steam head alignment, or a leak within the wall cavity and cause problems associated with leaks, moisture and property damage from leaks.

STEP 6. Plumb rigid copper tubing or brass pipe from the steam generator to the steam head. Use a ¾" NPT fitting appropriate for the steam piping used. Plumbing must not form traps or valleys. Thread sealant must be used as required to ensure a leak free joint between the piping and steam head.

STEP 7. Before continuing or closing the wall, test the installation, piping and steam head for leaks, traps, position, steam emission zone and for general proper installation.

CAUTION Failure to test the steam head installation may result in leaks, and cause problems associated with leaks, moisture and property damage from leaks.

Linear SteamHead shown without the optional faceplate or diverter.

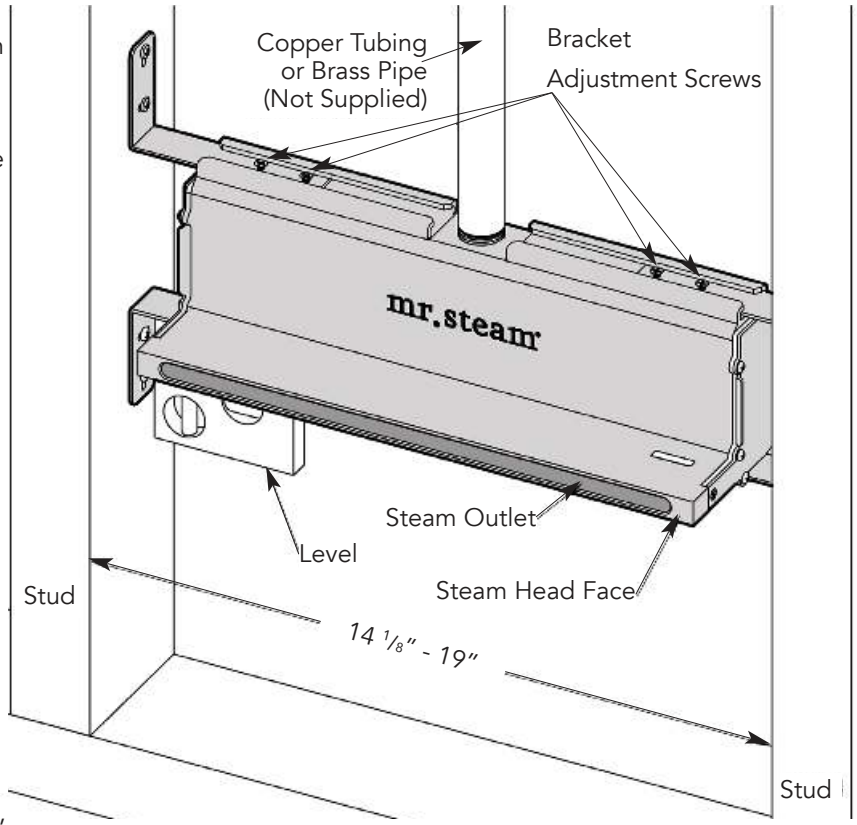

Figure 3

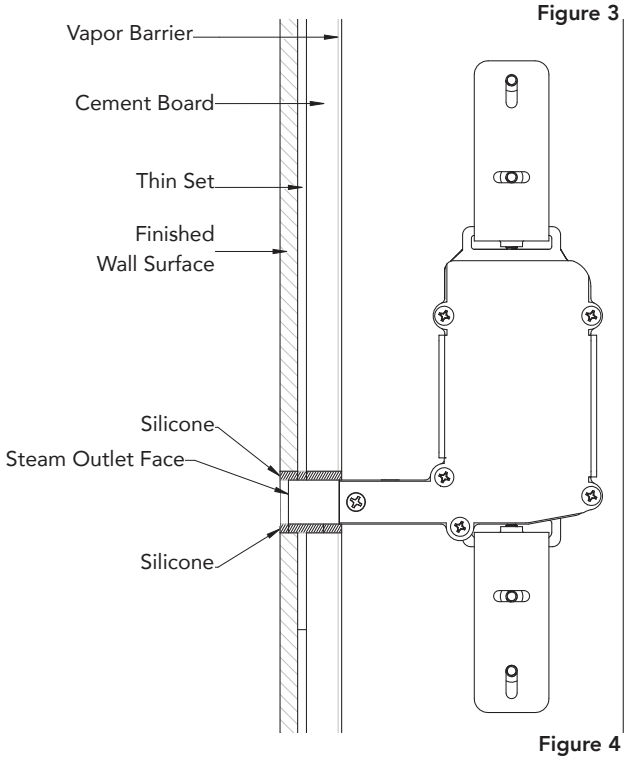

Figure 4

NOTE: ***Drawings are for illustrative purposes only.*** *Consult with qualified designer, architect or contractor for steam room construction.*

Optional Faceplate Installation

The steam head is supplied with an optional faceplate. It is not required for the functional operation of the steam head. The faceplate is a decorative accessory and is available in (8) finishes.

An optional Escutcheon (remodel plate) is available for purchase, it's larger than faceplate and is available in (8) finishes.

In **STEP 4**, instead of positioning the steam head face to be flush with the finished wall face, position the steam head so that the steam head face will be 1/8" recessed with the finished wall (see Fig. 4). This will provide clearance for the faceplate.

Apply silicone to the front of Linear Steam Head and firmly press the faceplate against the face of the steam head. Secure the faceplate as required until the silicone sets.

Return to **STEP 5** on page 4 to complete the installation.

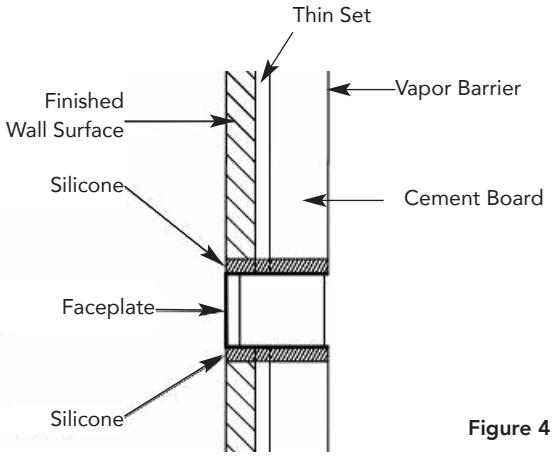

Figure 4

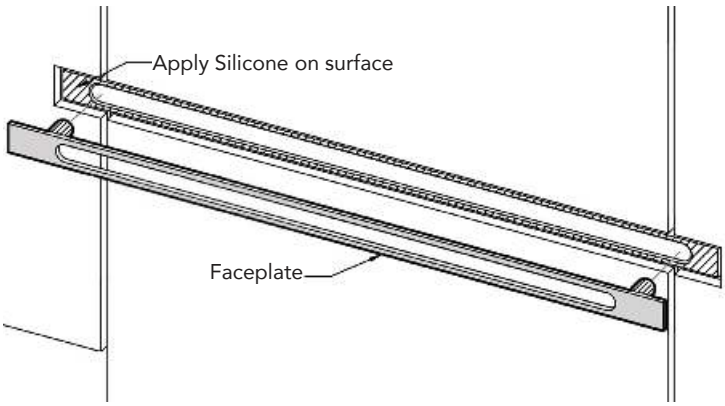

Figure 5

1. Determine the desired installation location of the control. The iSteam®, iTempo™ and iTempo/Plus™ controls are designed to be installed inside or out-side the steam room as a matter of personal prefer-ence. If the control is installed inside the steam room the control must be located:
2. 4-5 feet above the floor near the bather seating area

⚠ CAUTION

3. The control features an integral temperature sensor. Locate the control in a location representative of the desired steambathing temperatures.
   Do not locate the control above or near the steam head or direct steam emissions.
4. On a vertical wall

The control cable length is 30 feet. Insure that the control and/or steam generator are located accordingly. An optional 60 foot cable is available, PN 103990-60 for iTempo and PN 104117-60 for iSteam. Contact a MrSteam technical service representative if a 60 foot cable is required.

IMPORTANT NOTE: If the control is installed outside the steamroom a Remote Temperature Probe Part Number MSTS must be installed inside the steam room, depending on the control. Insure MrSteam steam generator is iSteam or iTempo compatible and has a serial number 900000 or higher. If iSteam is used with a generator having serial number less than 1174000, contact MrSteam technical support for an upgraded PC board.

See instructions for the MSTS Temperature Probe (located in the Control Installation Manual related to your specific control package) before rough-in or installation of control.

Steam Emission Zone

The Steam Emission Zone is the area in front of the steam head that contains dense, hot steam as it exits the steam head. Steam dissipates as it moves away from the steam head, and becomes less hot. The steam zone is the area where contact with steam presentees a scalding hazard. The steam head must be installed in a location to ensure that a steam bather will not be near the steam emission zone. The diverter reduces the steam emisson zone.

Steam Head without Optional Diverter

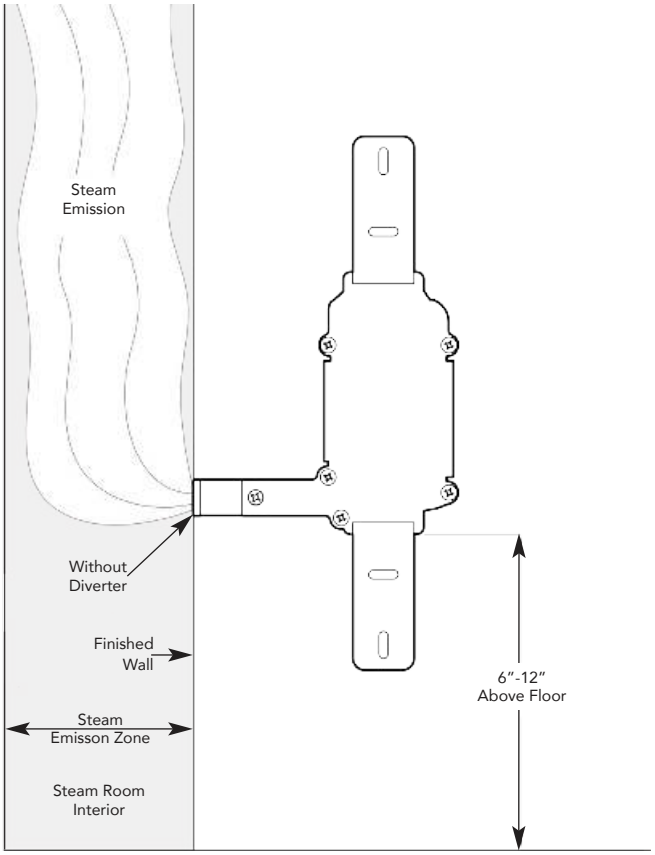

Steam Head with Optional Diverter

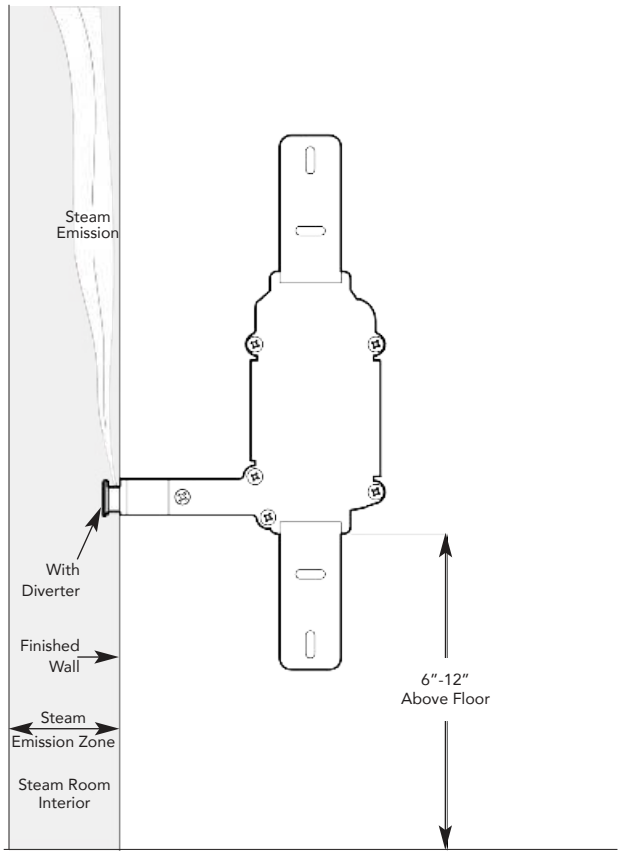

Generator Model	Minimum # of Linear Steam Heads	Steam Emission Zone with Diverter	Steam Emission Zone without Diverter
MS90-MS400 SAH3000-SAH6000	1	2”	10”
Super1-Super3	1	2”	24”
MX4-MX6	2	2”	24”

CAUTION The steam emission zone may vary with each installation. Always test the steam emission zone to insure safety.

NOTE: ***Drawings are for illustrative purposes only.*** *Consult with qualified designer, architect or contractor for steam room construction.*

Diverter

The Linear SteamHead is supplied with an optional steam diverter. The steam diverter is used to reduce the steam emission zone as required to avoid contact between a steam bather and direct steam emissions.

Supplied steam diverter does not have decorative finish. Steam diverters with decorative finish are available for purchase.

CAUTION Always use the diverter if any steam bather may come into contact with direct steam emissions. Contact MrSteam if a replacement diverter is required. Failure to use a diverter to reduce the steam emission zone as required to avoid contact between a steam bather and direct steam emissions may cause personal injury.

CAUTION Because direct steam is very hot, the diverter will be hot during the steam session, and will remain hot for a period of time after steam session. Never install, remove or adjust a diverter when the steam head is hot or if steam generator is turned on. Installing, removing or adjusting the diverter when the steam head is hot or if the steam generator is turned on may cause a burn hazard and personal injury.

CAUTION The optional diverter reduces the steam emission zone by redirecting steam up the wall above the steam head (see page 6). Installation of the diverter may result in the following:

- Changes to the steam distribution in the room
- Increase of the temperature of the wall and devices above the steam head
- Surface condensation patterns on the walls and ceiling

Always test the diverter to insure proper safety, installation and comfort.

STEP 1. Securely press the two rubber extensions into the opening of Linear Steam Head and push in firmly until the diverter is securely in place. (see Fig. 7).

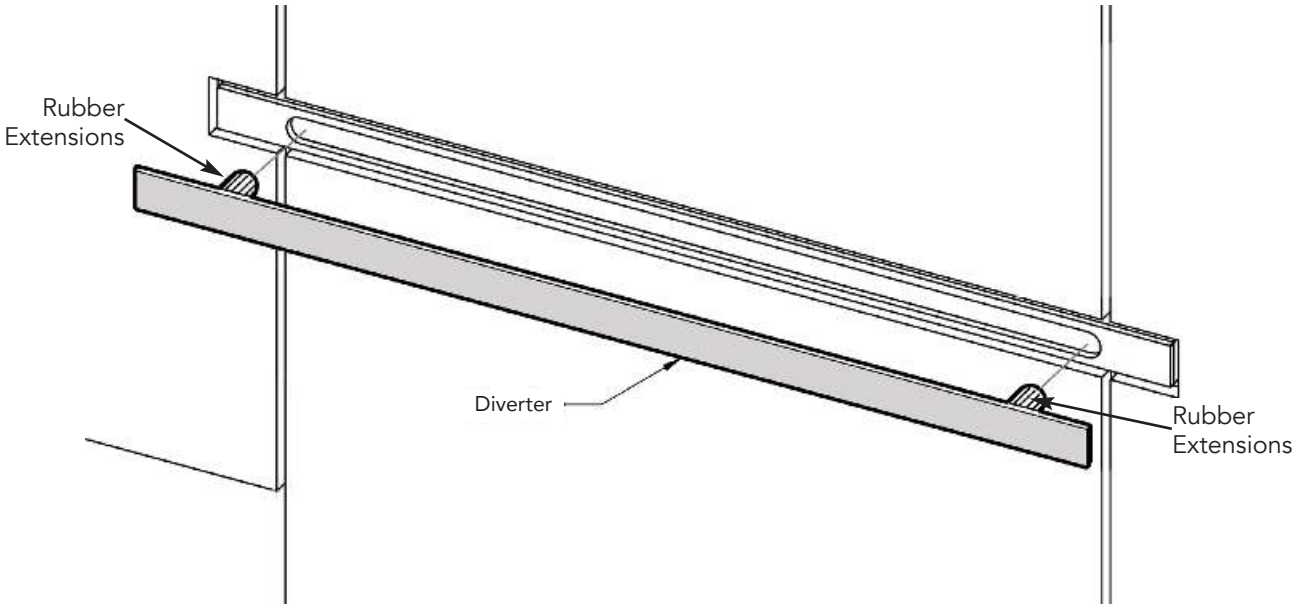

Figure 7

NOTE: ***Drawings are for illustrative purposes only.*** *Consult with qualified designer, architect or contractor for steam room construction.*

AromaTray

The AromaTray is for use with MrSteam Essential Oils. Place a few drops of Essential Oils in the AromaTray as shown to provide a fragrant steam bath experience. Read the instructions provided with the MrSteam Essential oils to insure a pleasant and safe aromatic steam bathing experience.

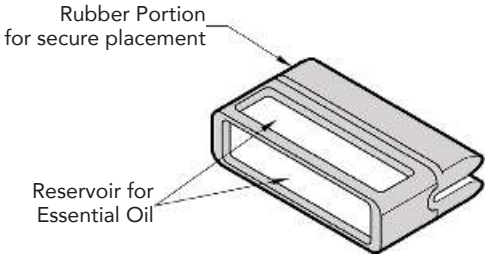

⚠ CAUTION Steam emissions, the linear steam head and AromaTray will all be hot during a steam bath session, and will remain hot for a period of time after the steam bath session. To avoid contact with the steam head and steam emissions, never install the AromaTray during a steam bath session or for a period of time after the steam bath session. Touching the AromaTray during a steam bath session, or for a period of time after the steam bath session, may result in burns, scalding or personal injury.

⚠ CAUTION Failure to first read the instructions provided with the MrSteam Essential oils may result in personal injury. If you do not have the instructions provided with the MrSteam Essential oils please call MrSteam customer or technical at 80076STEAM for a free copy, or go online at www.mrsteam.com.

AromaTray placement with the steam head or optional face plate

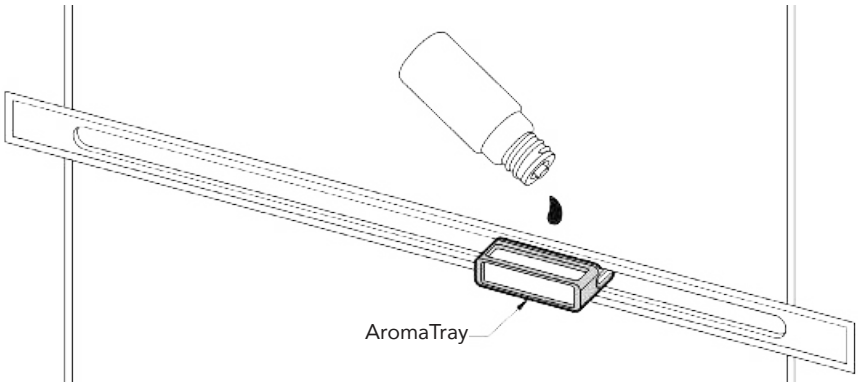

Firmly insert the rubber portion of the AromaTray into the steam outlet of Linear Steam Head with the oil reservoir facing up. Place a drop or two of AromaSteam essential oil in AromaTray. (see fig. 8)

Figure 8

AromaTray placement with the optional diverter

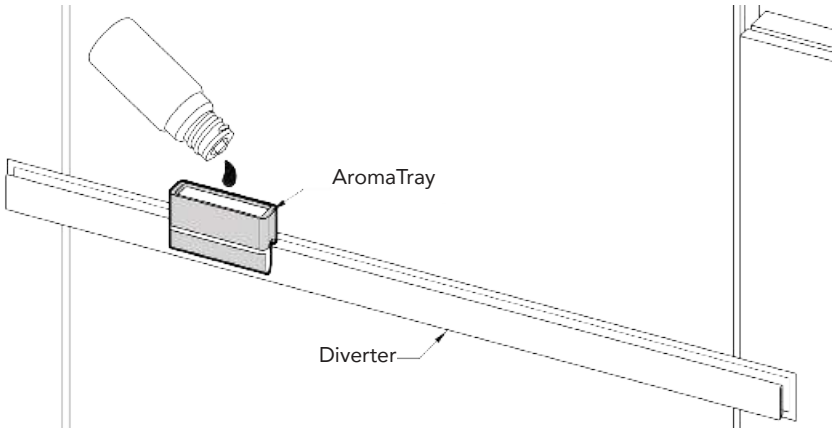

If a diverter is being used, firmly insert the rubber portion of the AromaTray onto the diverter with the oil reservoir facing up. Place a drop or two of AromaSteam essential oil in AromaTray. (see fig. 9)

Figure 9

NOTE: ***Drawings are for illustrative purposes only.*** *Consult with qualified designer, architect or contractor for steam room construction.*

Using MrSteam Essential Oils

Model 104480

Enjoy Mr.Steam essential oils by placing a drop or two, into your Mr.Steam AromaTray as shown in the illustration. Only use Mr.Steam essential oils in a Mr.Steam AromaTray. Contact a MrSteam customer or technical Service representative for essential oil Manufacturer Safety Data Sheets (MSDS).

⚠ CAUTION Start with one drop to gauge strength and suitability. Limit to a maximum of a few drops during a steambathing session.

⚠ CAUTION Use essential oils with caution. Essential oils are for external use only. Keep out of reach of children. Essential oils are highly concentrated and are potent substances and should not be applied directly to the skin as they can be irritants. Use essential oils with caution.

⚠ CAUTION Place the drops into the Mr.Steam AromaTray recess prior to turning on the steambath. Do not place drops in a hot steamhead as serious injury can result if you do not follow this warning.

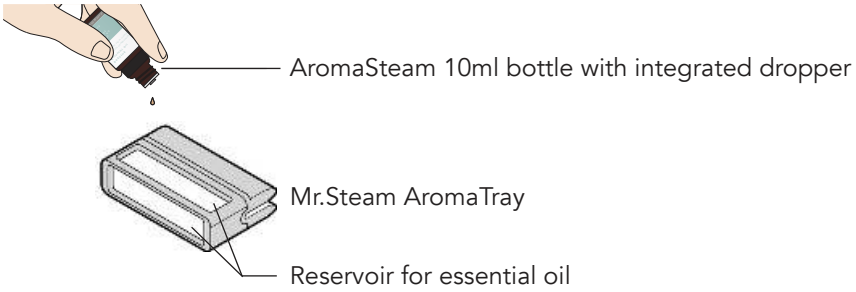

⚠ CAUTION Some people may find that the aroma makes them dizzy. In the event of dizziness, the user should exit the steambath immediately and breathe in fresh air. If skin irritation occurs stop using the oils right away. Remove any excess oil by washing in mild soap and water

⚠ CAUTION In case of contact with eyes, rinse immediately with plenty of water and seek medical advice. If ingested, rinse mouth with water. Administer water or milk to dilute. Contact a physician immediately. Tightly close containers when storing oils. Keep away from sources of ignition.

Warranty

To view or download the MrSteam Residential Generator Warranty and register your product go to: **blog.mrsteam.com/wr**

For Installation assistance please call Customer or Technical support:
East Coast 1-800-767-8326 West Coast 1-800-727-8326
To view an installation video please go to: www.mrsteam.com. This video is for added visual assistance only.
Do not install the Linear Steam Head using the video. Use only these installation instructions for a safe and problem free installation.

NOTE: ***Drawings are for illustrative purposes only.*** *Consult with qualified designer, architect or contractor for steam room construction.*

Model 104480

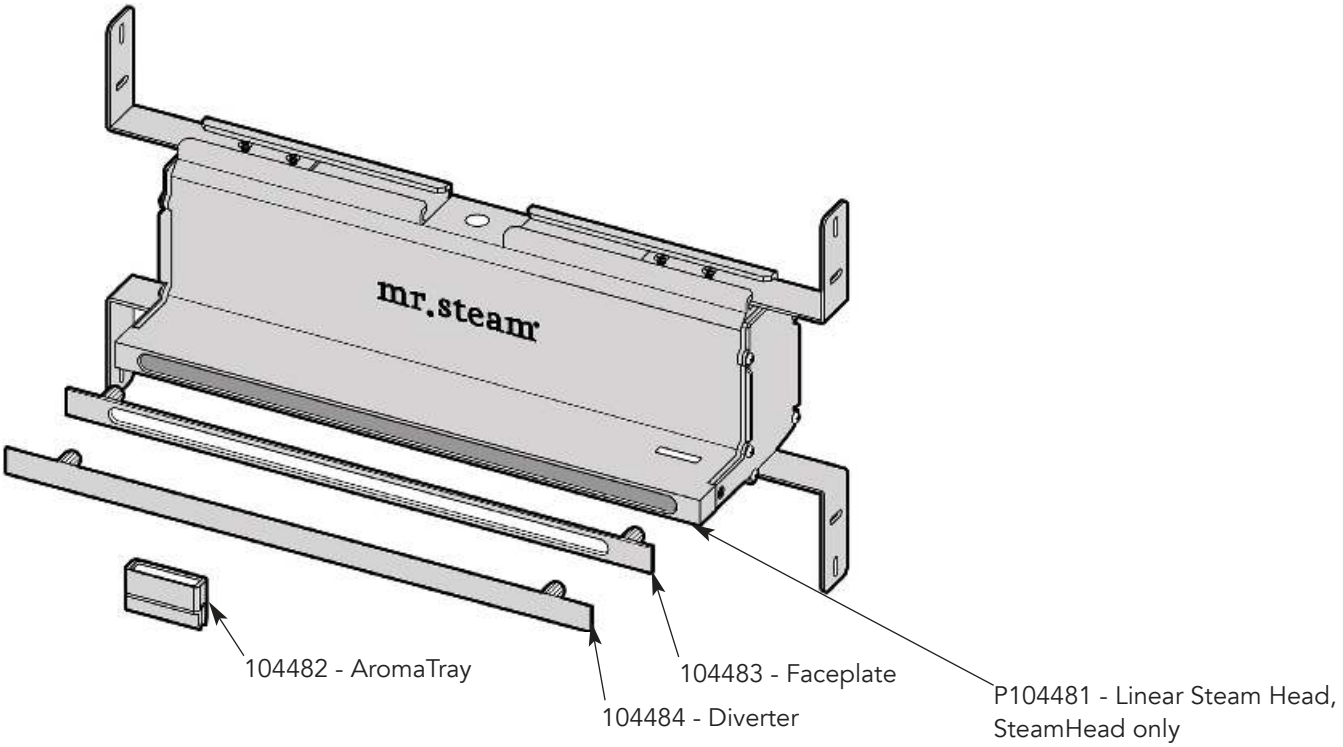

Replacement Parts

Part Number	Description
104482BB	AromaTray for LSH, Brush Bronze
104482BN	AromaTray for LSH, Brush Nickel
104482MB	AromaTray for LSH, Matte Black
104482ORB	AromaTray for LSH, Oil Rubbed Bronze
104482PB	AromaTray for LSH, Polish Brass
104482PC	AromaTray for LSH, Polish Chrome
104482PN	AromaTray for LSH, Polish Nickel
104482SB	AromaTray for LSH, Satin Brass
104483BB	LSH Faceplate Brush Bronze
104483BN	LSH Faceplate Brush Nickel
104483MB	LSH Faceplate Matte Black
104483ORB	LSH Faceplate Oil Rubbed Bronze
104483PB	LSH Faceplate Polish Brass
104483PC	LSH Faceplate Polish Chrome
104483PN	LSH Faceplate Polish Nickel
104483SB	LSH Faceplate Satin Brass

Optional Accessories

Part Number	Description
104485BB	LSH Escutcheon Brush Bronze
104485BN	LSH Escutcheon Brush Nickel
104485MB	LSH Escutcheon Matte Black
104485ORB	LSH Escutcheon Oil Rubbed Bronze
104485PB	LSH Escutcheon Polish Brass
104485PC	LSH Escutcheon Polish Chrome
104485PN	LSH Escutcheon Polish Nickel
104485SB	LSH Escutcheon Satin Brass
104486BB	LSH Diverter Brush Bronze
104486BN	LSH Diverter Brush Nickel
104486MB	LSH Diverter on Matte Black
104486ORB	LSH Diverter Oil Rubbed Bronze
104486PB	LSH Diverter Polish Brass
104486PC	LSH Diverter Polish Chrome
104486PN	LSH Diverter Polish Nickel
104486SB	LSH Diverter Satin Brass

mr.steam® hello@mrsteam.com | www.mrsteam.com

43-20 34th Street, Long Island City, NY 11101 TEL: 1 800 76 STEAM I 9410 S. La Cienega Blvd. Inglewood CA 90301 TEL: 1 800 72 STEAM

2020 © MrSteam and des., A Lifetime of Pleasure, AirTempo, AromaFlo, AudioWizard, AutoFlush, AutoSteam, Butler Package, ChromaSteam, Clean Steam...Every Time, Club Therapy, CT Day Spa, Digital 1, Express Steam, Feel Good Inc., From Bathroom to Spa, HomeWizard, iButler, iGenie, iSpa Package, iSteam, iTempo, iTempo/Plus, Linear Steamhead, Making Wellness a Way of Life, Music Therapy, My Steam, SmartSizing, Spa Package, Steam Genie, Steam on Demand, Steam in a Box, Steam@Home, SteamStart, SteamTherapy, Tala, Tala Bath & Body, Tempo, The Intelligent Steambath, Valet Package, and Virtual Spa System are registered trademarks of MrSteam.

PUR103936 Rev 05/22

Condensation Pan

103867 & 104402

Mr.Steam strongly recommends the use of a condensation pan in the unlikely event of a plumbing leak.

Locate the condensation pan on a solid level surface and place the steam generator inside the condensation pan. Insure the steam generator is level.

All plumbing shall be performed by a qualified licensed plumber and in accordance with applicable national and local codes. Check local plumbing code for receptor, trap and vent requirements. Condensation pans drain by gravity.The condensation pan is equipped with an integral 3⁄4" NPT fitting.

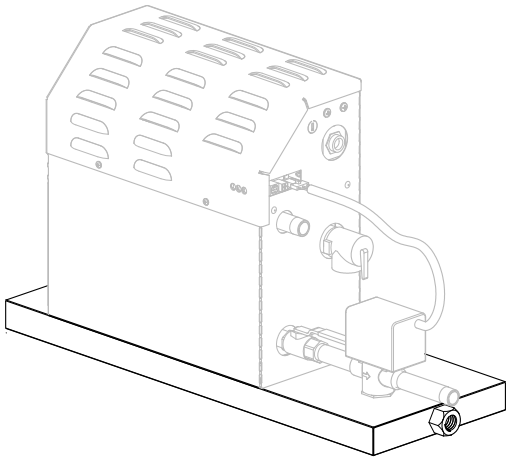

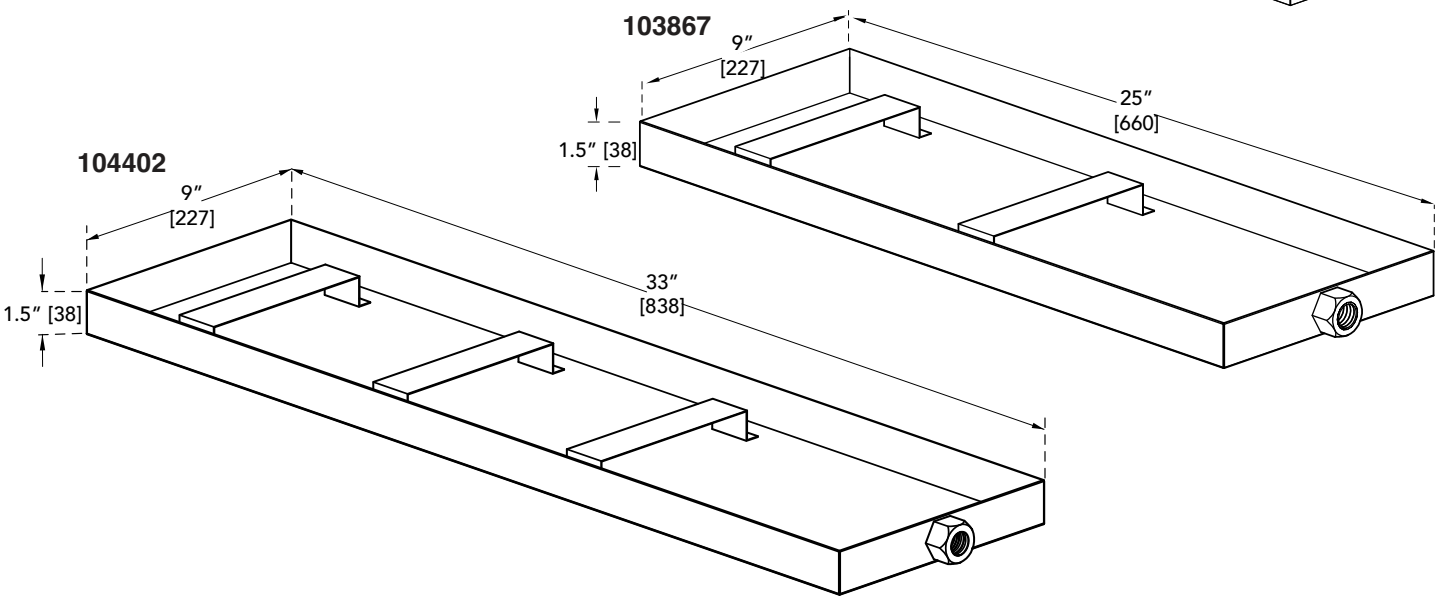

NOTE: For MX4E, MX5E and MX6E use model 104402

FOR ILLUSTRATIVE PURPOSES ONLY. **IMPORTANT NOTE: FOR SAFE AND TROUBLE FREE INSTALLATION** visit mrsteam.com before installation to download the Installation, Operation and Maintenance Manual or refer to the manual provided with the unit.

MODEL	PROJECT INFORMATION	
☐ 103867 ☐ 104402	Location:	Contractor:
	Architect:	Submitted By:
	Engineer:	Date:
Notes:		

mr.steam®

Optional AutoFlush® System

INSTALLATION INSTRUCTIONS

BOX CONTENTS:

- AutoFlush System Valve with Cord
- Installation Instructions.

ASSEMBLY OF OPTIONAL AUTOFLUSH® SYSTEM

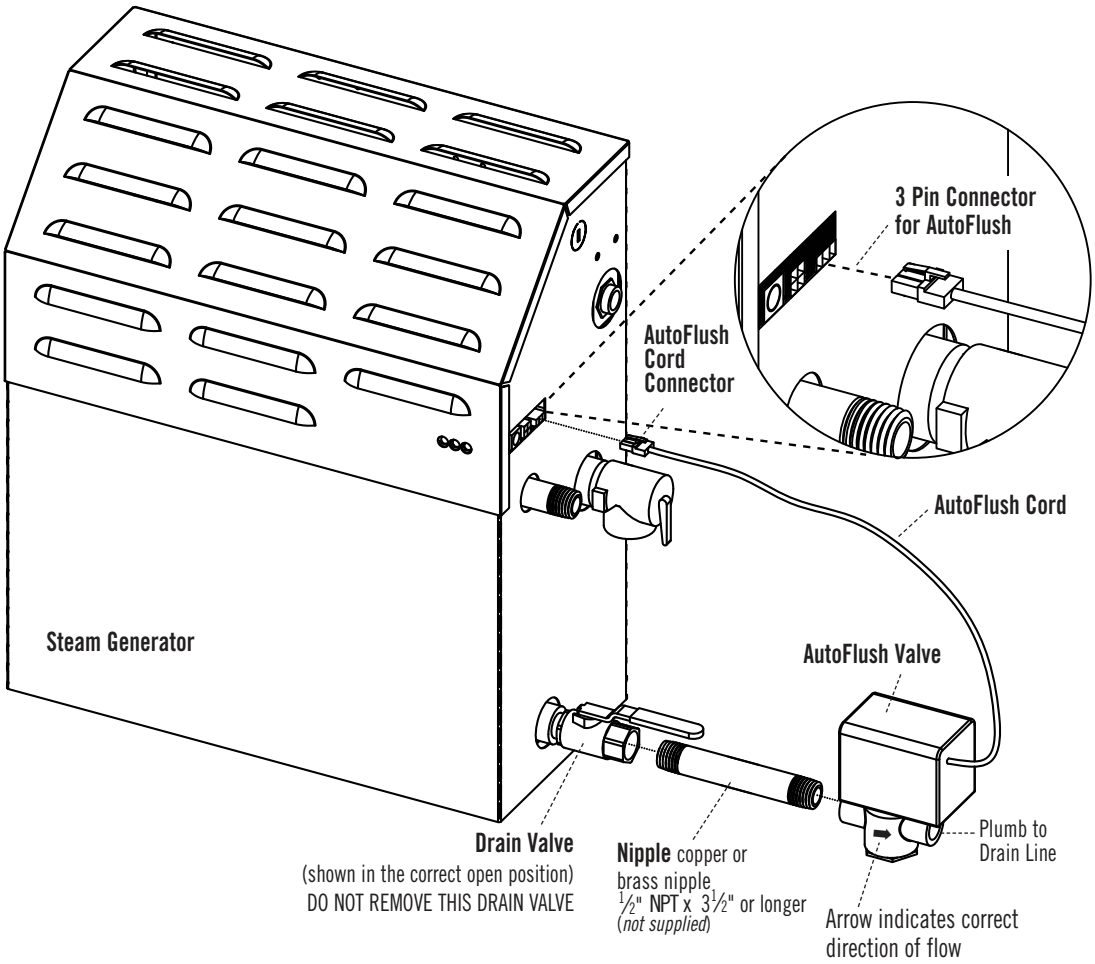

OPERATION

The optional AutoFlush System feature automatically drains the MrSteam system following each use. A time delay allows the water to cool down (about two hours) before it drains resulting in a safe and gentle operation.

mr.steam® hello@mrsteam.com • www.mrsteam.com
43-20 34th Street, Long Island City, NY 11101 1 800 76 STEAM I 9410 S. La Cienega Blvd. Inglewood CA 90301 1 800 72 STEAM

INSTALLATION INSTRUCTIONS

1. Plumbing to be performed by a qualified plumber and shall be in accordance with applicable National and Local codes. Unit drains by gravity. A drain line that is lower than the AutoFlush assembly must be available. The AutoFlush System valve outlet is threaded 1/2" NPT. Check plumbing code for receptor, trap and vent requirements.
2. Use copper or brass nipple 1/2" NPT x 31/2" (90mm) or longer (not supplied) to connect AutoFlush valve to the Drain Valve (flow direction is indicated on bottom of AutoFlush Valve).

CAUTION DO NOT REMOVE THE DRAIN VALVE
Removal may cause equipment and property damage. If there is not enough room for the valve, an elbow and a short nipple (*not provided*) can be added.

3. Open Drain Valve (handle must be aligned with brass nipple).
4. Connect the AutoFlush System cord connector to the three pin connector as shown.

WARNING Do not drain into a steam enclosure or any location where accidental contact with drain water may occur. In the event of a power failure the AutoFlush System valve will open and may discharge boiling water.

SWEAT FITTINGS

When using sweat fittings use only tin base solder with a melting point below 600 degrees F. Do not overheat. Ends of water supply tubing must be thoroughly clean for a minimum distance of 1" from ends. Do not remove valve cover.

TO CHECK OPERATION

1. Turn on MrSteam with the control and allow tank to fill with water. (see MrSteam Instruction Manual)
2. Turn off MrSteam with the control. Water should stay in tank.
3. Turn off power at the panel box. Water should discharge from tank.
4. Turn on power at panel box.
5. Repeat

CAUTION PROVIDE DRAIN PLUMBING ACCORDING TO LOCAL CODES. PLUMB AS REQUIRED FOR AUTOFLUSH SYSTEM.

AutoFlush® Shown Fully Assembled

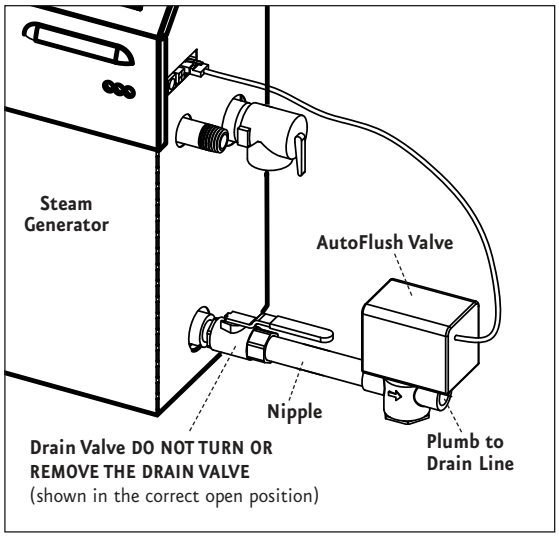

Installing AutoFlush on Older Model Generators SN:899,999 and below

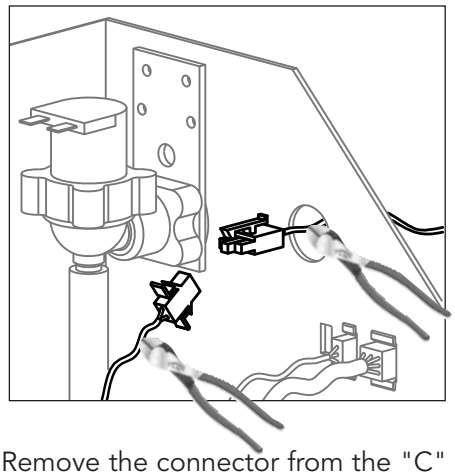

1. Remove the connector from the "C" location in the jacket. Cut off the connector where shown and strip back the wires approx 0.375"
2. Cut the connector off the AutoFlush cable where shown and strip back the wires approx 0.375".
3. Remove the knockout in the side of the generator and install a bushing to prevent chafing.
4. Route the wires from the AutoFlush through the knockouts and connect the white wire from the AutoFlush to the white wire from the circuit board using a wire nut. Repeat for the black wire.

IMPORTANT NOTE: Contact the MrSteam Technical Service Dept. for installation of any equipment not shown in these instructions. East Coast: 800-767-8326; West Coast: 800-727-8326

WARRANTY: To view or download the MrSteam Controls & Accessories Warranty and register your product go to: **blog.mrsteam.com/wr**

mr.steam®

Optional AutoFlush® System

INSTALLATION INSTRUCTIONS

BOX CONTENTS:

- AutoFlush System Valve with Cord
- Installation Instructions.

ASSEMBLY OF OPTIONAL AUTOFLUSH® SYSTEM

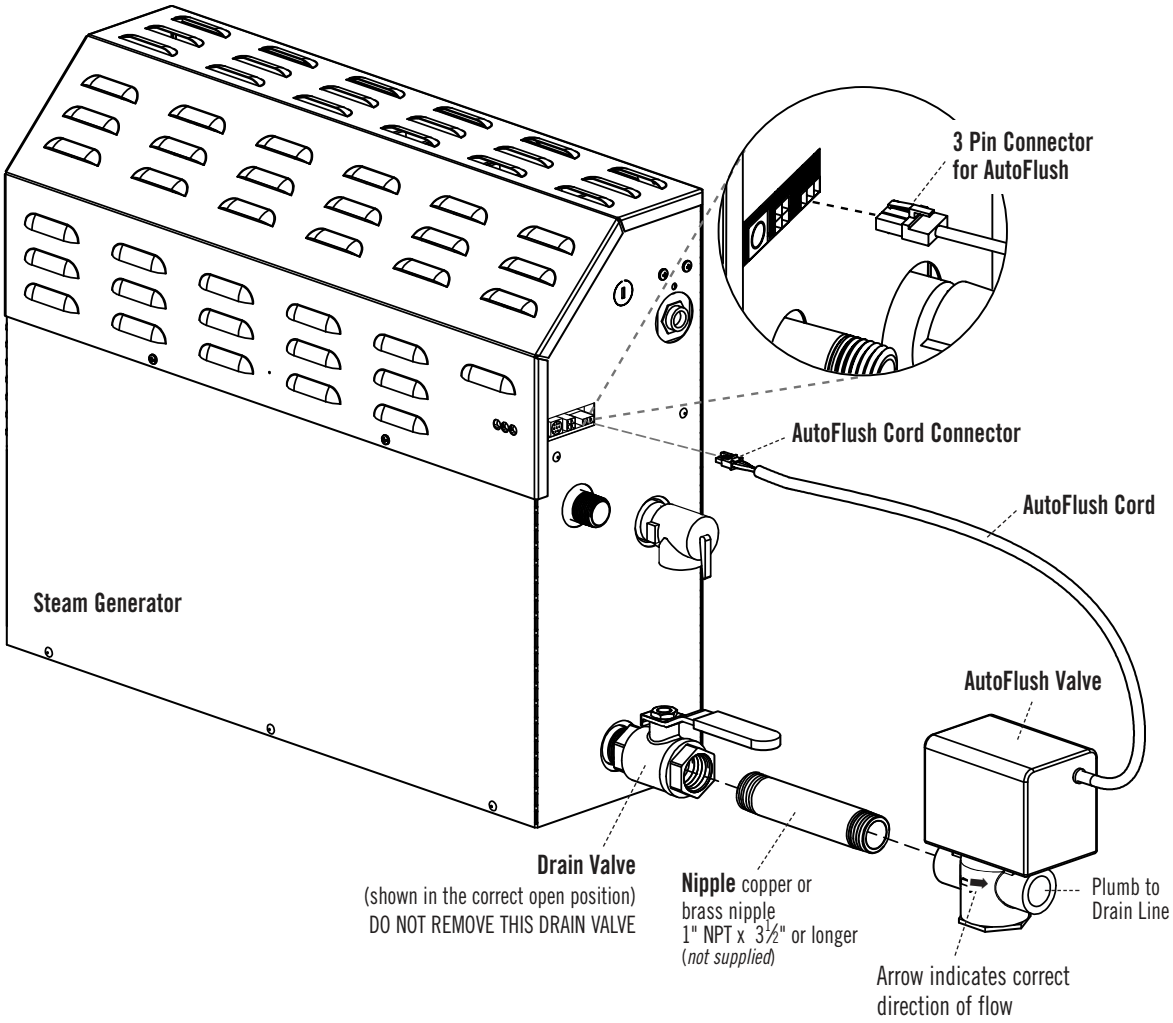

OPERATION

The optional AutoFlush System feature automatically drains the MrSteam system following each use. A time delay allows the water to cool down (about two hours) before it drains resulting in a safe and gentle operation.

mr.steam® hello@mrsteam.com www.mrsteam.com
43-20 34th Street, Long Island City, NY 11101 1 800 76 STEAM I 9410 S. La Cienega Blvd. Inglewood CA 90301 1 800 72 STEAM

INSTALLATION INSTRUCTIONS

1. Plumbing to be performed by a qualified plumber and shall be in accordance with applicable national and local codes. Unit drains by gravity. A drain line that is lower than the AutoFlush assembly must be available. The AutoFlush System valve outlet is threaded 1" NPT. Check plumbing code for receptor, trap and vent requirements.
2. Use copper or brass nipple 1" NPT x 3½" or longer (*not supplied*) to connect AutoFlush valve to the Drain Valve (flow direction is indicated on bottom of AutoFlush Valve)

CAUTION DO NOT REMOVE THE DRAIN VALVE
Removal may cause equipment and property damage. If there is not enough room for the valve, an elbow and a short nipple (*not provided*) can be added.

3. Open Drain Valve (handle must be aligned with brass nipple).
4. Connect the AutoFlush System cord connector to the three pin connector as shown.

WARNING Do not drain into a steam enclosure or any location where accidental contact with drain water may occur. In the event of a power failure the AutoFlush System valve will open and may discharge boiling water.

SWEAT FITTINGS

When using sweat fittings use only tin base solder with a melting point below 600 degrees F. Do not overheat. Ends of water supply tubing must be thoroughly clean for a minimum distance of 1" from ends. Do not remove valve cover.

TO CHECK OPERATION

1. Turn on MrSteam with the control and allow tank to fill with water. (see MrSteam Control Instruction Manual)
2. Turn off MrSteam with the control. Water should stay in tank.
3. Turn off power at the panel box. Water should discharge from tank.
4. Turn on power at panel box.
5. Repeat

CAUTION PROVIDE DRAIN PLUMBING ACCORDING TO LOCAL CODES. PLUMB AS REQUIRED FOR AUTOFLUSH SYSTEM.

AutoFlush® Shown Fully Assembled

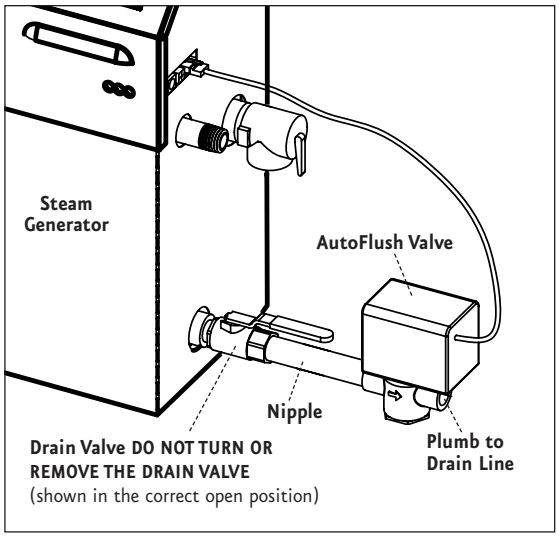

IMPORTANT NOTE: Contact the MrSteam Technical Service Department for installation of any equipment not shown in these instructions. East Coast: (800) 767-8326; West Coast: (800) 727-8326

WARRANTY: To view or download the MrSteam Controls & Accessories Warranty and register your product go to: **blog.mrsteam.com/wr**