IMPORTANT: LEAVE THIS MANUAL WITH THE OWNER/OPERATOR

Installation, Operation & Maintenance Manual

CX Series Steambath Generators

Installation, Operation & Maintenance Manual Models: CX0360 through CX5000

mr.steam® Feel Good Inc.®

READ ME FIRST!

WARNING As you follow these instructions, you will notice warning and caution symbols. This blocked information is important for the safe and efficient installation and operation of this generator. These are types of potential hazards that may occur during installation and operation:

WARNING Indicates a potentially hazardous situation, which, if not avoided, could result in death or serious injury.

CAUTION Indicates a potentially hazardous situation, which, if not avoided may result in minor or moderate injury or product damage.

NOTICE is used to address practices not related to physical injury.

IMPORTANT NOTE: This highlights information that is especially relevant to a problem-free installation.

All information in these instructions is based on the latest product information available at the time of publication. MrSteam reserves the right to make changes at any time without notice. More current instructions may be available at www.mrsteam.com.

When installing and using this electrical equipment, basic safety precautions should always be followed, including the following:

IMPORTANT SAFETY INSTRUCTIONS

1. **READ AND FOLLOW ALL INSTRUCTIONS**
2. WARNING Supervise children at all times.
3. WARNING Steam is hot and can cause injury or death if improperly used. Steam rooms contain steam and elevated temperatures. Please read and observe all warnings in this manual before installing or using a steam room.
4. WARNING To reduce the risk of injury:

A. The wet surfaces of steam enclosures may be slippery. Use care when entering or leaving.

B. The steam head is hot. DO NOT touch the steam head and avoid the steam near the steam head.

C. Prolonged use of the steam system can raise excessively the internal human body tempera-ture and impair the body's ability to regulate its internal temperature (hyperthermia). Limit your use of steam to 10-15 minutes until you are certain of your body's reaction.

D. Excessive temperatures have a high potential for causing fetal damage during the early months of pregnancy. Pregnancy or possibly pregnant women should consult a physician regarding correct exposure.

E. Obese persons and persons with a history of heart disease, low or high blood pressure, circulatory system problems, or diabetes should consult a physician before using a steambath.

F. Persons using medication should consult a physician before using a steambath since some medication may induce drowsiness while other medications may affect heart rate, blood pressure and circulation.

SAVE THESE INSTRUCTIONS

HYPERTHERMIA occurs when the internal temperature of the body reaches a level several degrees above the normal body temperature of 98.6° F. The symptoms of hyperthermia include an increase in the internal temperature of the body, dizziness, lethargy, drowsiness, and fainting. The effects of hyperthermia include:

a) Failure to perceive heat;
b) Failure to recognize the need to exit the steambath;
c) Unawareness of impending risk;
d) Fetal damage in pregnant women;
e) Physical inability to exit the steambath
and
f) Unconsciousness.

WARNING The use of alcohol, drugs, or medication can greatly increase the risk of hyperthermia.

WARNING This placard label is an essential part of providing a safe environment for steam room users. This placard must be applied to the wall outside of the shower or steam enclosure, at a point that is visible to all users. Failure to install this placard may result in serious injury or death.

mr.steam®

STEAM ROOM BENEFITS

Steambathing is a communal activity. Enjoy steam together with friends.

Relax, knowing that steam may be a natural detox. Here are some possible benefits of steambathing:

- Cleanses, nourishes, and hydrates skin.
- Boosts metabolism.
- Provides relief for respiratory ailments such as colds, flu, allergies, and asthma.
- Reduces stress and promotes restful sleep.

Follow your steambath with a refreshing shower.

If you would like your own personal steam bath at home contact us at www.mrsteam.com

WARNING

REDUCE THE RISK OF OVERHEATING AND SCALDING

1. Exit immediately if uncomfortable, dizzy or sleepy. Staying too long in a heated area is capable of causing overheating.
2. Children under the age of 16 should not use the steam bath.
3. Check with a doctor before use if pregnant, diabetic, in poor health or under medical care.
4. Breathing heated air in conjunction with consumption of alcohol, drugs or medication is capable of causing unconsciousness.
5. Do not contact steam head or steam at the steam head.

REDUCE THE RISK OF SLIPPING AND FALL INJURY

Use care when entering or exiting the steam room, floor may be slippery.

Note: For additional safety considerations see owner's manual.

Mr.Steam : 43-20 34th Street, Long Island City, NY 11101, 1-800-76-STEAM, www.mrsteam.com

PUR100626 REV 7.25

mr.steam® hello@mrsteam.com • www.mrsteam.com
43-20 34th Street, Long Island City, NY 11101 TEL: 1 800 76 STEAM
9410 S. La Cienega Blvd. Inglewood, CA 90301 TEL: 1 800 72 STEAM

Table of Contents

Definitions 2
Important Safety Information 4
Warning 4
Important Safety Information 5
Caution 5
Notice 5
Hyperthermia 5
Locating the Steam Generator 6
Warning 6
Caution 6
Notice 6
Steam Generator Clearance Specifications 6
Warning 6
Notice 6
Plumbing 7
General 7
Caution 7
Notice 7
Warning 7
Water Supply (3/8" NPT) 8
Notice 8
Drain (1" NPT) 8
Caution 8
Notice 8
Safety Valve (3/4" NPT) 8
Warning 8
Caution 8
Steam Piping 10
Steamhead Installation 10
Notice 10
Acrylic Shield 11
Notice 11
Control Mounting 12
Flush Mounting 12
Surface Mounting 12
Electrical 12
Warning 12
External Terminal Connections 12
Electrical Chart 13
Control Circuit Wiring Diagram 14
Power Circuit Wiring Diagram 15
Generator Dimensions 16
Control Dimensions 17
Temperature Sensor Installation 17
30 Minute Room Timer 18
Replacement Parts List 19
IP Address Assignment 20
Single Generator System 20
Multi-Generator System 20
Programming 21
Additional Features 22-23
Troubleshooting 24
Troubleshooting Guide 25

MODEL _____

SERIAL NO. _____

Every CX Generator Package is supplier with:
Factory Installed AutoFlush Valve
CX Control
CX Control Cable (30 ft)
CX Control Power Supply
Steam Room Temperature Probe
Temperature Probe Guard
Temperature Probe Cable (30 ft)
Steam Room Warning Sign
Condensation Pan*
Steamhead with Acrylic Shield*

*Multi generator system include one condensation pan, one steam head and one acrylic shield for each generator in the system in addition to and ethernet hub and additional 30 foot control cables to interconnect the generators.

IMPORTANT SAFETY INFORMATION

WARNING Read these instructions before installation, operation or service.

WARNING Never use damaged equipment, doing so may result in an inoperative or hazardous installation.

WARNING Discontinue use of the steam generator and control if the steam generator or control are damaged or otherwise not functioning properly. Using damaged equipment may result in an inoperative or hazardous installation.

WARNING The CX series of steam generators are for commercial use only. Residential or other noncommercial applications void the warranty and may adversely affect product performance and may represent a safety hazard.

WARNING Although the CX steambath generators have been fully qualified for shipment by MrSteam®, the following must be reviewed for proper, safe and enjoyable steam bathing:

a. Verify that the model and accessories specifications are correct for the incoming line voltage.

b. Ensure steambath generator has been correctly sized for the steam room. Pay particular attention to room volume and construction. If any questions, please call MrSteam.

WARNING Supervise children at all times.

WARNING Steam is hot and can cause injury or death if improperly used. Steam rooms contain steam and elevated temperatures. Please read and observe all warnings in this manual before installing or using a steam room.

WARNING Prolonged use of the steam system can raise excessively the internal human body temperature and impair the body's ability to regulate its internal temperature (hyperthermia). Limit your use of steam to 10-15 minutes until you are certain of your body's reaction.

WARNING Excessive temperatures have a high potential for causing fetal damage during the early months of pregnancy. Pregnancy or possibly pregnant women should consult a physician before using a steam bath.

WARNING Obese persons and persons with a history of heart disease, low or high blood pressure, circulatory system problems, or diabetes should consult a physician before using a steambath.

WARNING Persons using medication should consult a physician before using a steambath since some medication may induce drowsiness while other medications may affect heart rate, blood pressure and circulation.

WARNING Electric shock hazard. MrSteam steam generators are connected to high voltage and contain live electrical components. All installation and service to be performed by qualified and licensed electricians and plumbers only. Installation or service by unqualified persons or failure to use MrSteam parts may result in property damage or in a personal injury.

WARNING If you are pregnant, have a coronary condition, are in poor health, are being treated for any other medical condition, or are using medication or drugs, MrSteam recommends that you obtain the approval of a physician before use.

IMPORTANT NOTE REGARDING STEAM PIPING:

CX Generators include two outlets for steam piping. Some jurisdictions, including the State of Texas require that **BOTH** outputs must be piped independently to the steam room. Consult with your local jurisdiction for non-code atmospheric steam generators, if two independent outlets are **NOT** required, one of the outlets may be capped. For mutli-unit systems, steam piping from each generator must be independent.

IMPORTANT SAFETY INFORMATION

CAUTION The wet surfaces of steam enclosures may be slippery. Use care when entering or leaving. To prevent slip and fall hazards non-slip strips or non-slip flooring must be installed on the steam room floor.

CAUTION The steamhead is hot. Do not touch the steamhead and avoid the steam near the steamhead.

CAUTION The information in this manual should be used in conjunction with consultations with an architect, designer and contractor in determining factors necessary in providing a suitable and safe steam room.

CAUTION MrSteam steam generators must be operated with MrSteam controls and accessories only, and are to be installed strictly in accordance with the specific instructions contained in this manual and as supplied in the manuals provided with the controls or accessories.

NOTICE This document contains important safety, operation and maintenance information. Leave this document with the owner. Do not discard this document.

NOTICE Consider any controls and accessories before installation. Read the Installation and Operation Manual of all controls and accessories available at www.mrsteam.com.

NOTICE Record the model and serial number of the steam generator in the space provided in the table of contents of this manual.

NOTICE If acrylic, fiberglass or other non-heat resistant materials are used as part of the steam room enclosure, consult with the material manufacture and see page 10, "Steamhead Installation" for additional details.

NOTICE Carefully inspect the steam generator and packaging for shipping damage. In the event of shipping damage, please contact the carrier for claim information. MrSteam customer service department can assist you with any missing or damaged parts.

NOTICE The physical size of the steam generator, clearance for plumbing servicing, and its distance from the steam room must all be considered before installation.

HYPERTHERMIA

The effects of hyperthermia include:

- **a)** Failure to perceive heat.
- **b)** Failure to recognize the need to exit the steambath.
- **c)** Unawareness of impending risk.
- **d)** Fetal damage in pregnant women.
- **e)** Physical inability to exit the steambath.
- **f)** Unconsciousness.

The use of alcohol, drugs, or medication can greatly increase the risk of hyperthermia.

WATER QUALITY INFORMATION

For optimum results, the water supply should be tested prior to installation. If the mineral content exceeds the following recommended limits, various external treatment processes are recommended to correct the problem.

NOTICE An analysis of the on-site water must be made by a recognized and reliable water treatment company to ascertain the existing condition and treatment required.

Poor water quality can affect efficiency or result in steam generator damage. Water contains impurities in solution and suspension. These impurities concentrate in the generator. The concentration of these impurities increases as more feedwater is introduced into the generator and steam is produced. If the suspended solids are allowed to concentrate beyond certain limits, a deposit or "scale" will form on the generator internal surfaces. This deposit can interfere with the proper generator operation and cause generator failure. The concentration of these impurities is generally controlled by the water quality and by periodic draining of the generator.

RECOMMENDED FEEDWATER QUALITY

Hardness, ppm	8 – 85 (~0.5 – 5 gpg)
P-Alkalinity, ppm	85 – 410 (~5 – 24 gpg)
T. Alkalinity, ppm	200 – 500 (~7 – 0 gpg)
pH (strength of alkalinity)	8.0 – 11.4

Every 2 months, or more often in "hard" water areas, the manual drain valve should be opened fully flushing out accumulated materials, salts and other particles which are natural by-products of boiling water. The supplied AutoFlush system automatically drains the CX generator following each use. The valve will open immediately after the system is turned off either manually or with the timer. The AutoFlush cycle includes a cool water quench. The system drains by gravity.

LOCATING THE STEAM GENERATOR

WARNING Do not run any control wiring inside conduit together with power lines or close to hot water or steam piping. Doing so may result in an inoperative or hazardous installation.

WARNING Installation or operation of the steam generator in an ambient temperature above 113° F (45 °C) may result in a hazardous condition or property damage.

WARNING Do not install the steambath generator or control inside steam room, a shock hazard and/or equipment damage will occur.

WARNING Do not install steambath generator outdoors or wherever environmental conditions may result in a shock hazard and/or equipment damage.

WARNING To prevent a fire hazard, do not install the steambath generator near flammable or corrosive materials or chemicals such as gasoline, paint thinners, or the like.

WARNING Installation in areas having high concentrations of chlorine (such as pool equipment room) must be avoided.

CAUTION Do not install the steambath generator or plumbing line in an unheated attic or any locations where water could freeze and cause pipes to rupture and cause property damage.

CAUTION Steam piping, safety valve, drain valve and plumbing become hot during operation and remain hot after shutdown for a period of time. Provide appropriate protection, including insulating plumbing lines. Avoid plumbing runs and steamhead locations that can come in contact with bathers to prevent a burn hazard.

CAUTION Install the steambath generator on a solid and level surface.

CAUTION Install the steambath generator in an upright position only to prevent damage to the generator, pipes and electrical system. Failure to install in an upright position may result in a leak or shock hazard.

CAUTION Do not hang the CX steam generator on a wall. Hanging the CX generator on a wall may result in a leak, shock hazard or equipment damage.

NOTICE Provide a minimum of 18"on the left side and 21" at the top of the steam generator or as required for servicing. See page 7 for complete information.

NOTICE Select a location as near as practical to the steam room.

NOTICE The standard length of the cable for connecting the Temperature Probe to the steam generator is 30 feet. The steam generator and control must be located accordingly. A longer cable can be purchased by the end user.

NOTICE Install anti-water hammer device as necessary.

NOTICE The control cable should be run in a dedicated 1-inch conduit to facilitate installation and service.

NOTICE Provide unions as required to facilitate installation and removal of the steam generator.

NOTICE The minimum clearance from combustible surfaces is zero all around.

STEAM GENERATOR CLEARANCE SPECIFICATIONS

WARNING Do not install CX series inside a small enclosed space . Do not install under the steam room bench. Installing the CX steam generator in a small enclosed space may result in elevated temperatures and an inoperable steam generator.

WARNING Locate the CX series generator in a room with ventilation as required to prevent an increase in ambient temperature. Failure to provide adequate ventilation may result in elevated temperature and an inoperable steam generator.

NOTICE Minimum Clearance from Combustible Surfaces is zero all around.

NOTICE For ease of servicing and installation, MrSteam recommends a minimum clearance around the steam generator as shown.

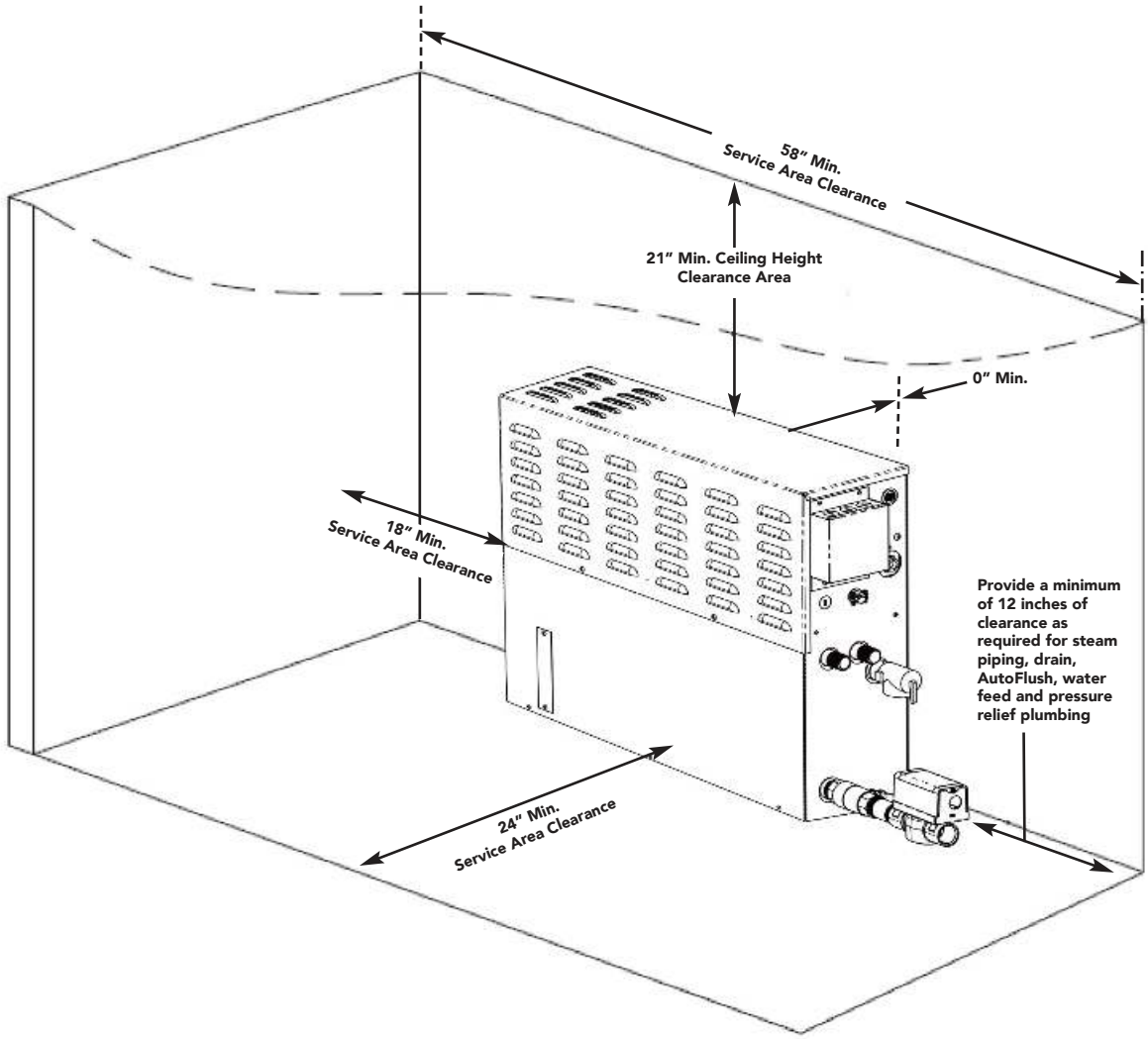

PLUMBING

General

CAUTION All plumbing shall be performed by a qualified licensed plumber and in accordance with applicable National and local codes.

NOTICE Use unions on all pipe connections as required for service and removal of the steam generator.

NOTICE Use only brass piping or rigid copper tubing. Use only piping as permitted by codes.

NOTICE Do not use black, galvanized, PVC pipe or PEX except as noted.

WARNING Water supply and steam piping must be flushed to remove flux and other debris prior to connecting the steam generator. Failure to flush the steam piping may result in blockage or an inoperable system.

(All Drawings for Illustrative Purposes Only.)

WATER SUPPLY (3/8" NPT)

NOTICE Install a shut off valve in the water supply line.

NOTICE It is recommended to install a strainer in the water supply line.

NOTICE Install an anti-water hammer device as required.

NOTICE Install an approved backflow preventer as required by local codes.

NOTICE Connect the generator to a cold water line.

NOTICE Water feed line may be flexible copper tubing, braided hose, PVC or PEX if permissible by local codes.

NOTICE Do not overheat inlet solenoid valve with solder connections. Overheating will damage parts and may result in a water leak.

NOTICE Flush inlet water line thoroughly before making connection to the generator.

NOTICE To reduce operating noise, reduce feed water pressure to between 15 - 20 psi is recommended. Optional pressure reducing valve part number 104198.

DRAIN (1" NPT)

CAUTION Do not connect the generator drain line to an undersink trap.

CAUTION Do not drain into a steam enclosure or any location where accidental contact with drain water may occur.

CAUTION Do not connect the drain valve to the steam piping. Connecting the drain line to the steam piping may allow boiling water to discharge through the steamhead causing a scalding hazard.

NOTICE A drain valve is provided to facilitate maintenance and servicing. Provide a drain line connection from steambath generator drain valve according to National and Local Codes.

NOTICE Check local plumbing code for receptor, trap and vent requirements.

NOTICE Do not connect Drain line and Safety Valve line together.

NOTICE The steam generator drains by gravity. Plumb all drain lines accordingly.

NOTICE See Condensation pan instructions for installation of the optional Condensation Pan.

SAFETY VALVE (3/4" NPT)

Where permitted by local codes, provide an outlet plumbing connection for safety valve.

WARNING To insure proper and automatic safety valve operation do not connect a shut off valve or a plug at safety valve outlet.

WARNING Do not connect a shut off valve or any obstruction to the safety valve.

WARNING Do not connect the safety valve output to the steam piping.

STEAM PIPING (3/4" NPT)

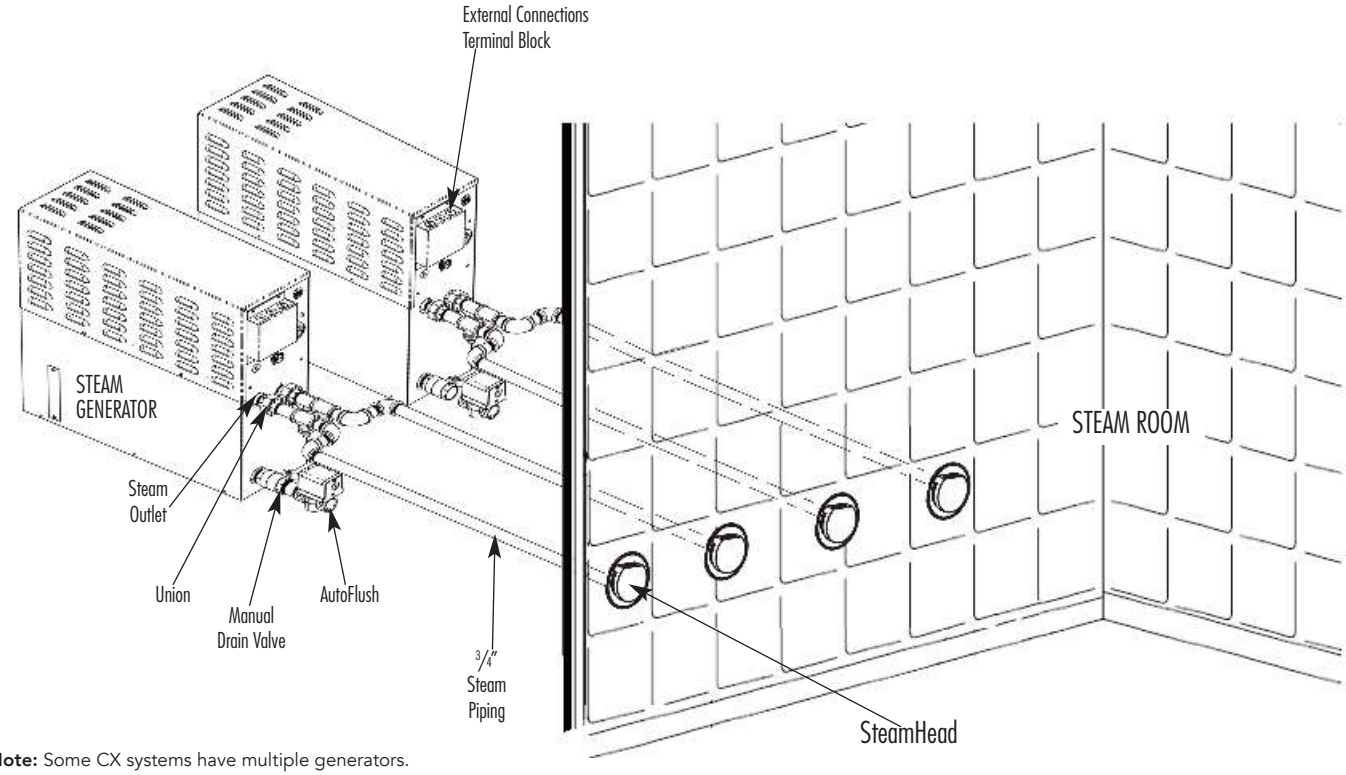

Note: Some CX systems have multiple generators. Each steam generator must be plumbed separately to a dedicated steam lines and dedicated steamheads.

WARNING A steam line must be run from steam outlet nipple and the steam outlet tee as shown. Both steam lines shall be independent from each other to prevent the build up of pressure.

WARNING Do not install any valve in steam piping. The flow of steam must be unobstructed.

WARNING CX Steam Generators must be installed with two or more steamheads per generator. More than two steamheads per generator are recommended and will result in reduced noise. For installations of tandemed CX Steam Generators, each generator must be installed with two or more steamheads.

WARNING Never use less than 3⁄4" steam piping from generator. Using less than 3/4" steam piping will result in increased velocity of steam coming out of the steamheads and may result in scalding and personal injury.

WARNING Install steam piping as required (including routing, fittings and length of pipe) to ensure an equal amount of steam reaches each steamhead. Unequal steam piping will result in too much steam coming out of one steamhead and may result in scalding and personal injury.

CAUTION Use brass pipe or copper tubing from unit to steamhead as permitted by codes.

CAUTION Insulate steam piping with fiberglass pipe insulation or similar insulation rated 212° F or higher.

CAUTION Pitch steam piping 1/4" per foot towards steamhead or steam generator to avoid valleys and trapping of condensate. Running the steam piping down and then up will create a steam trap blocking or restricting the flow of steam.

CAUTION Models CX1600 to CX5000 are made of multiple steam generators. Each steam generator must be plumbed separately to steam lines and dedicated steamheads.

(All Drawings for Illustrative Purposes Only.)

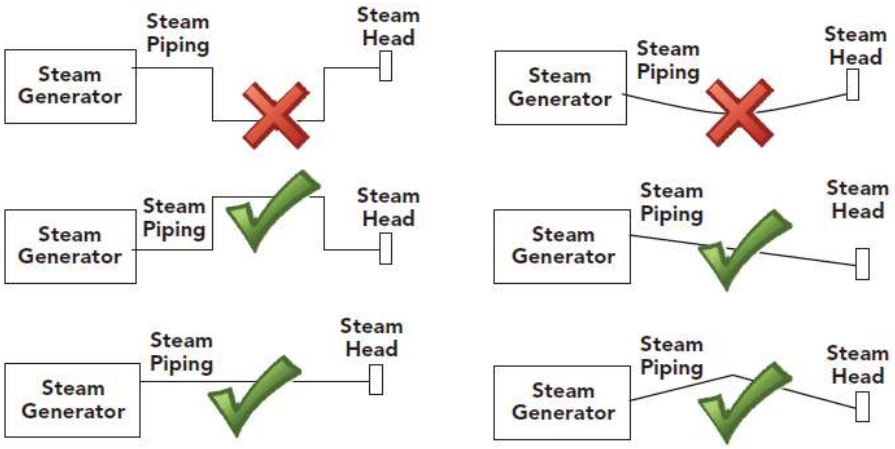

Failure to pitch the steam piping as required for condensate to drain, may cause condensate to block the flow of steam. Blocking the steam flow may cause steam pressure to discharge boiling water through the steamhead, resulting in a scalding hazard. Blocking the flow of steam may cause steam to discharge through the safety valve, resulting in a scalding hazard.

NOTICE For the optimal distribution of steam, steamheads should be spaced evenly throughout the steam room.

STEAMHEAD INSTALLATION

- For steam rooms constructed of tile, marble or similar non-porous heat-resistant materials for the enclosure, locate steamhead 12 inches above steam room floor and install MsSteam PN 103938 acrylic shield on each steamhead.
- Locate each steamhead away from bather seating area and away from traffic patterns as required to prevent incidental contact with steamhead or direct steam emissions.
- Install each steamhead with steam slots facing to the left and right as shown in the diagrams.
- Apply a bead of silicone around the steamhead where it meets the wall as required to prevent moisture damage.

NOTICE To preserve the steamhead finish, do not use wrench or other tools to tighten. Use of proper thread sealant and hand tightening is usually sufficient.

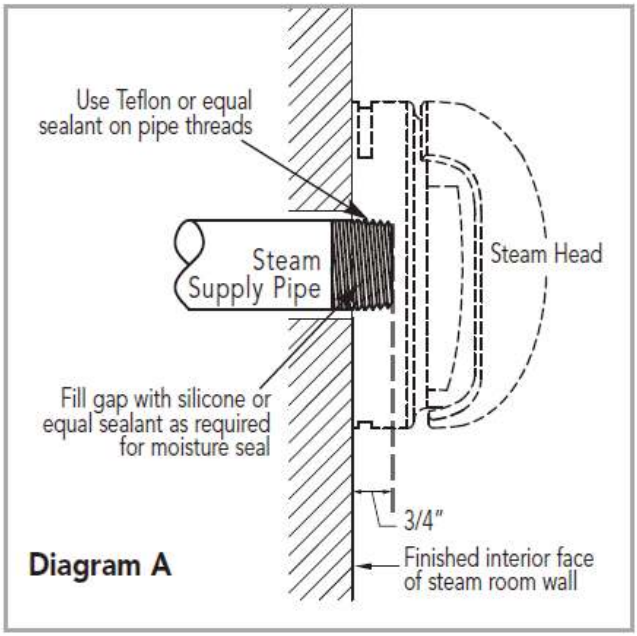

Diagram A

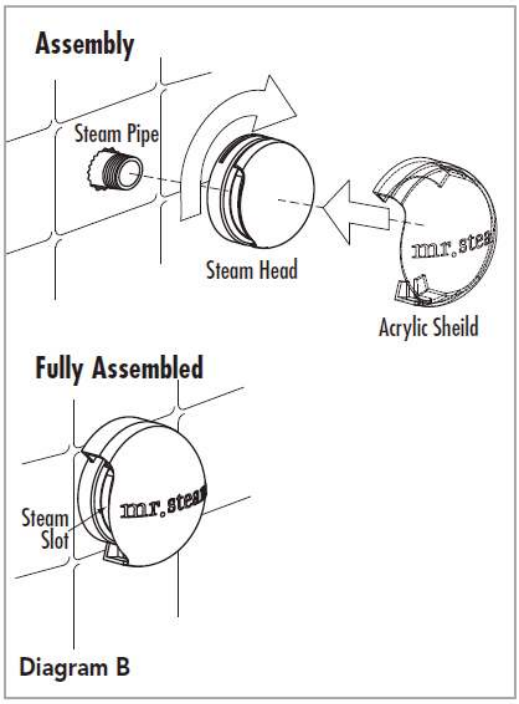

Diagram B

SACRYLIC SHIELD

Apply a small bead of silicone in the grooves on the top and bottom of the steamhead. Place an Acrylic Shield (PN 103985) over the steamhead until the tabs engage the grooves in the steamhead.

NOTICE Do not use with fragrance containing aldehydes. Acrylic Shield damage may result. MrSteam oils are approved for use with this acrylic shield.

(All Drawings for Illustrative Purposes Only.)

CONTROL MOUNTING

- Select the mounting plate or box for either flush or surface mounting respectfully.

FLUSH MOUNTING

- Cut a 5 7/8" wide by 7 5/8" tall hole into the wall.
- Insert the control into the provided mounting plate.
- Insert and tighten each of the 4 provided clips into their respective slots on the sides and top of the control to secure the control to the mounting plate.
- Insert the control into the new hole in the wall.
- Take note that the wire connections and the light on the front face of the control should be facing down.
- Using the provided screws and wall anchors, secure the mounting plate to the wall.

SURFACE MOUNTING

- Insert the control into the provided mounting box. Take note that the wire connections and the light on the front face of the control should be facing down, as does the side of the box which is open.
- Insert and tighten each of the 4 provided clips into their respective slots on the sides and top of the control to secure the control to the mounting box.
- Using the provided screws and wall anchors, secure the mounting box to the wall.

CONTROL ELECTRICAL

- The control must be plugged into a 120 VAC outlet

GENERATOR ELECTRICAL

- Connect power wiring to main terminal block.
- Open the Terminal cover on the right side of the generator.
- Connect the 30 minute room timer, and the emergency stop, diagram below. The 30 minute room timer and the emergency stop are optional. A jumper between the L and S terminals will need to be removed to install the room timer. Please see the appropriate wiring diagram for more details. If this room does not use either options, no changes are needed.
- In the event the CX system has multiple generators, connect the 30 minute room timer, the emergency stop, and the room probe to generator 1.

EXTERNAL TERMINAL CONNECTIONS

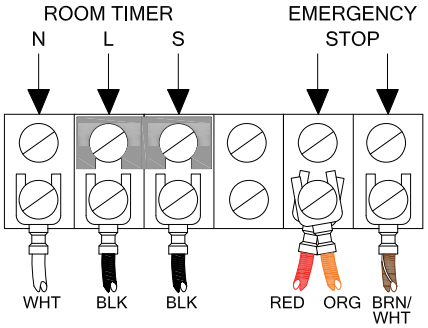

Remove jumper between L and S terminal when using room timer.

WARNING Never use damaged equipment, doing so may result in an inoperative or hazardous installation.

WARNING All electrical wiring installation to be performed by a qualified licensed electrician in accordance with National Electrical Code and Local Electrical Code.

WARNING Connect electrical power supply to the power block only. Do not connect power supply directly to elements. Connecting power directly to the elements may result in a dry fire and result in elevated temperatures and a fire hazard.

WARNING For 208V units do not apply more than 218V service.

WARNING Use minimum 90° rated insulated copper conductors only, sized in accordance with National Electrical Code and Local Electrical Code for the current in Ampere Chart. If allowed by codes, NM cable may require a larger wire size than as listed on the chart.

WARNING Connect suitably sized equipment grounding wire to ground terminal provided. Neutral (white) wire is not required for 208V and 240V units.

WARNING Provide suitable over-current protection (fuses or circuit breaker).

WARNING Provide a power supply disconnect within sight of the steam generator or one that is capable of being locked in the open position as required by code.

WARNING Wire size (AWG) is based on minimum 90° C rated THHN copper conductors. Refer to the National Electric Code for other types of conductors.

Electrical Chart

Model	kW	Room Volume (FT3)	Volts	Phase	Amps	Wire size (AWG) for 25°C
CX0360	9	Up to 360	208	1	44	6
				3	25	8
			240	1	38	8
				3	22	10
			480	3	11	14
CX0500	12	361 - 500	208	1	58	4
				3	34	8
			240	1	50	6
				3	29	8
			480	3	14	12
CX0600	15	501 - 600	208	1	73	4
				3	42	8
			240	1	63	4
				3	37	8
			480	3	19	10
CX0800	20	601 - 800	208	1	97	1
				3	56	4
			240	1	84	3
				3	48	6
			480	3	24	8
CX1000	24	801 - 1000	208	1	116	1/0
				3	67	4
			240	1	100	1
				3	58	6
			480	3	29	8
CX1250	30	1001 - 1250	208	1	145	3/0
				3	84	2
			240	1	125	2/0
				3	73	3
			480	3	36	8
CX1600*	40 (2X 20)	1251 - 1600	208	3	112 (2X 56)	2X 4
			240	3	96 (2X 48)	2X 6
			480	3	48 (2X 24)	2X 8
CX2000*	48 (2X 24)	1601 - 2000	208	3	134 (2X 67)	2X 4
			240	3	116 (2X 58)	2X 6
			480	3	58 (2X 29)	2X 8
CX2500*	60 (2X 30)	2001 - 2500	208	3	168 (2X 84)	2X 2
			240	3	146 (2X73)	2X 3
			480	3	72 (2X 36)	2X 8
CX3000*	72 (3X 24)	2501 - 3000	208	3	201 (3X 67)	3X 4
			240	3	174 (3X 58)	3X 6
			480	3	87 (3X 29)	3X 8
CX5000*	120 (4X 30)	3001 - 5000	208	3	336 (4X 84)	4X 2
			240	3	292 (4X73)	4X 3
			480	3	144 (4X 36)	4X 8

* Models CX1600 - CX2500 are made of two discrete generators, model CX3000 is made of three and model CX5000 CX5000 is made of 4 units

.

CONTROL CIRCUIT WIRING DIAGRAM

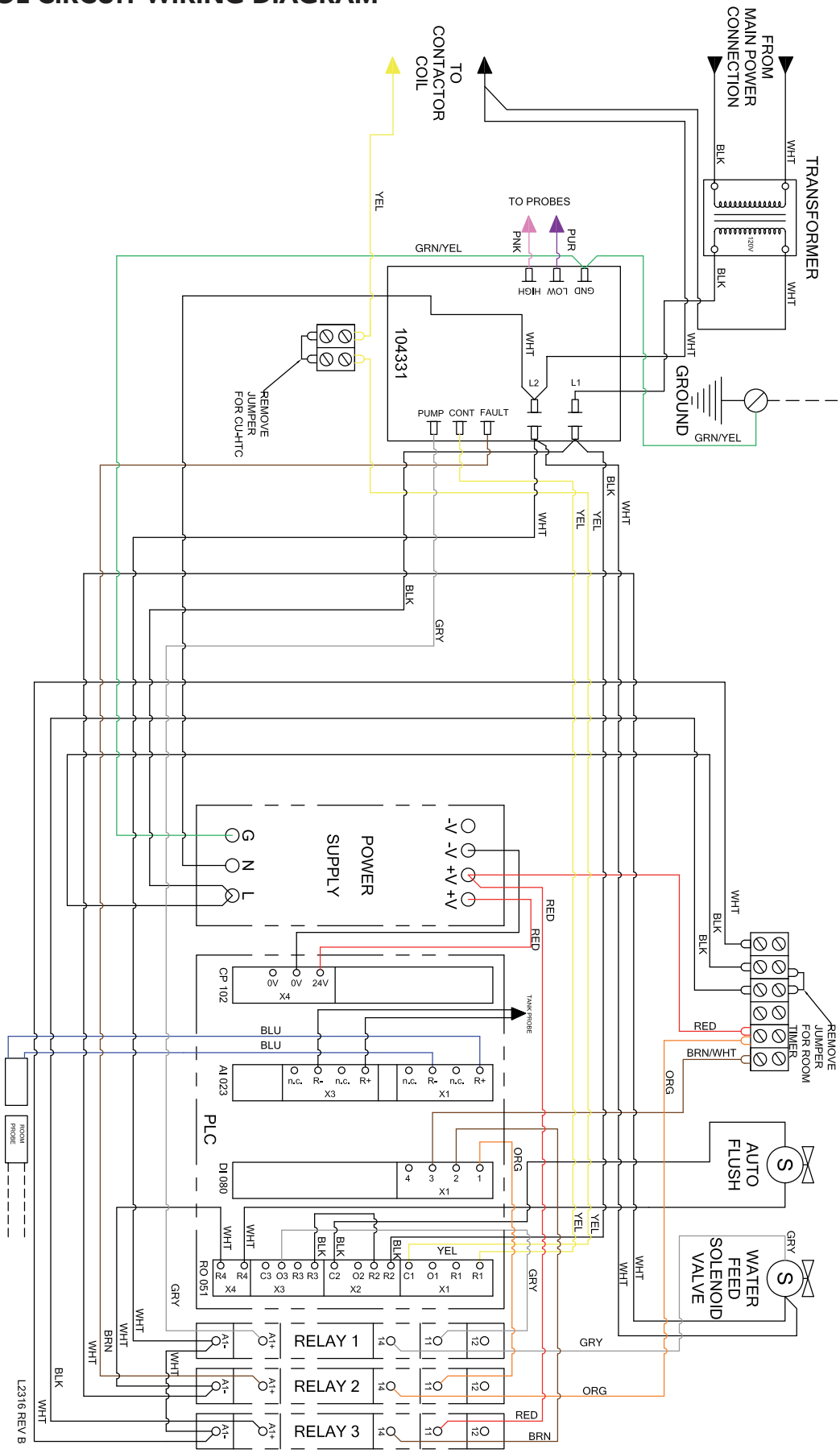

POWER CIRCUIT WIRING DIAGRAM

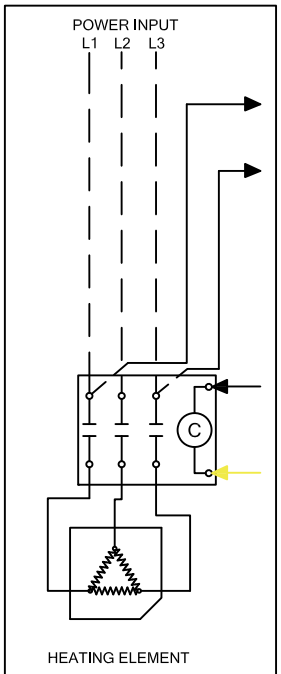

GCX0360, GCX0500
& GCX0600
208-600VAC 3 PHASE

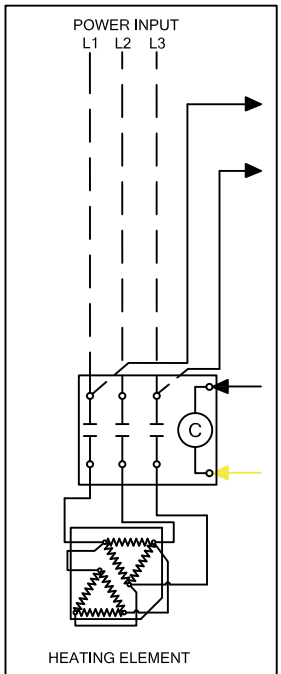

GCX0360 - GCX1250
380-600VAC 3 PHASE

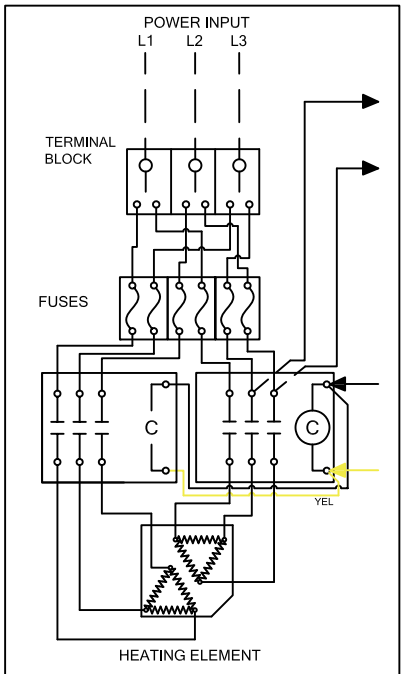

GCX0800, GCX1000, GCX1250
208-240VAC 3 PHASE

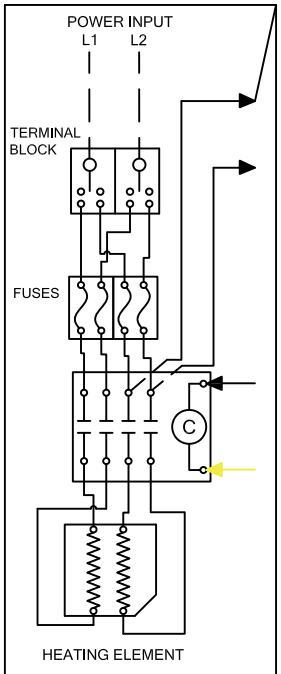

GCX0500 & GCX0600
208-240VAC
SINGLE PHASE

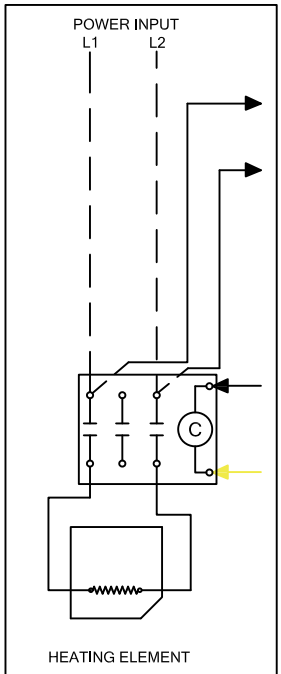

GCX0360
208-240VAC
SINGLE PHASE

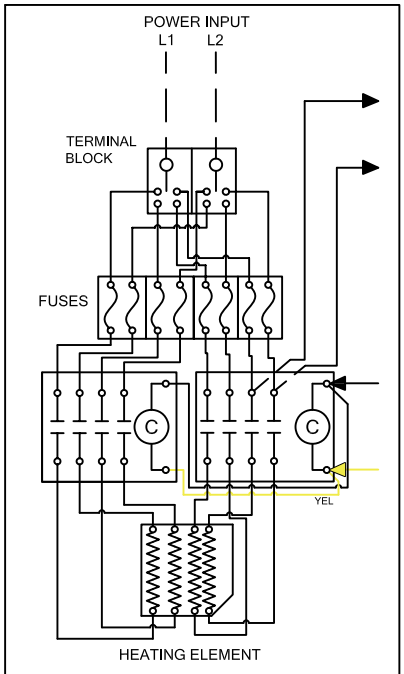

GCX0800, GCX1000, GCX1250
208-240VAC SINGLE PHASE

GENERATOR DIMENSIONS

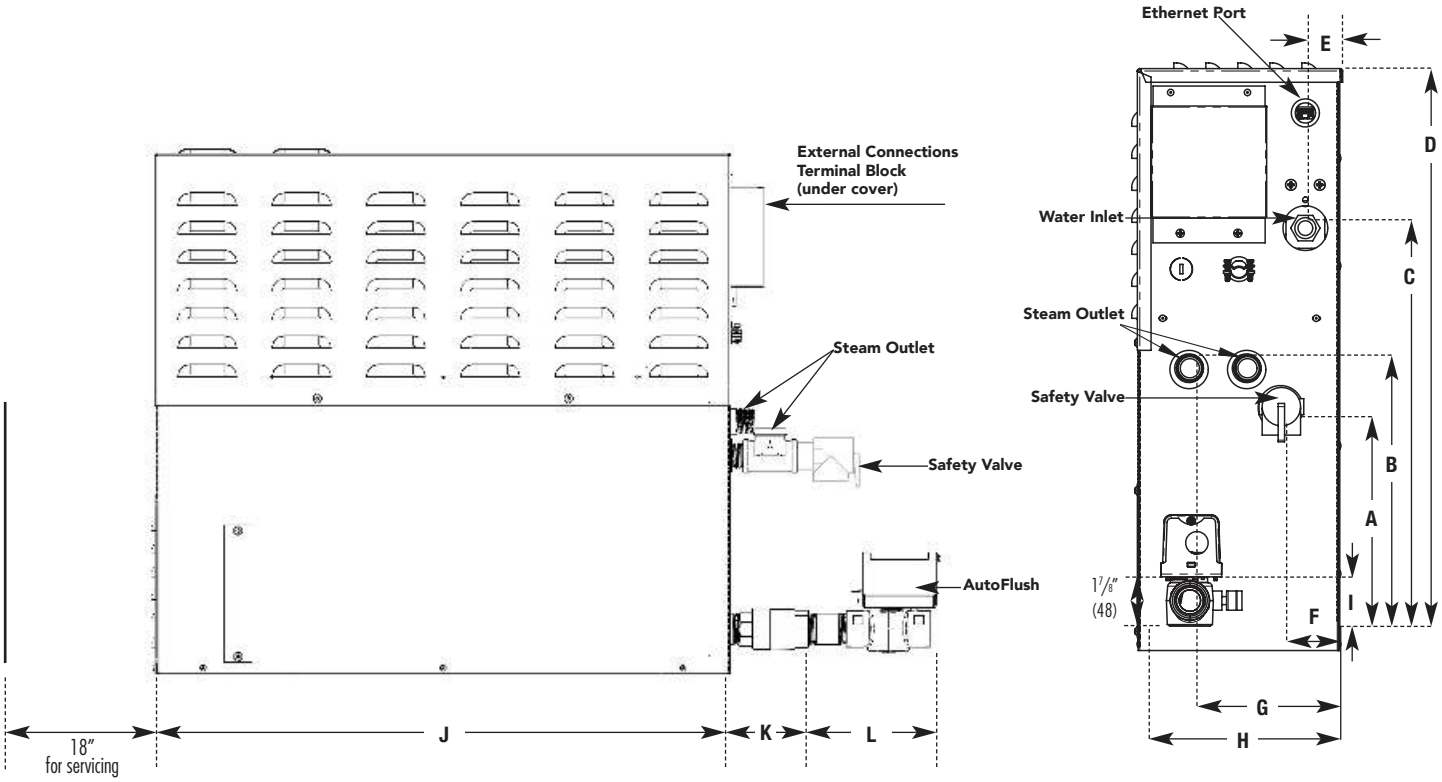

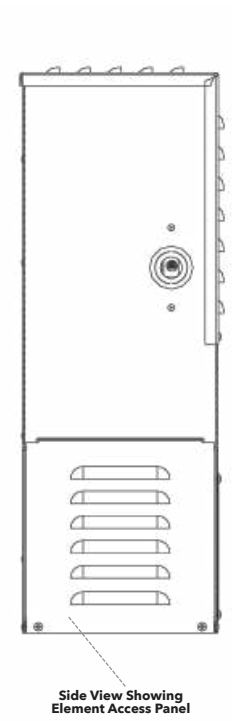

Dimensions

	CX0360-1250
A	9 ¾ (248)
B	11 (280)
C	16 ½ (419)
D	22 (578)
E	1 ⅜ (34)
F	2 ⅜ (60)
G	5 ⅞ (150)
H	7 ⅞ (200)
I	1 ⅞ (48)
J	25⅛ (638)
K	2 ⅜ (60)
L	6 ⅜ (162)

NOTES:
All units in inches (MM)

WARNING

TO AVOID EQUIPMENT DAMAGE DO NOT CONNECT POWER SUPPLY DIRECTLY TO ELEMENTS.

Connecting power directly to the elements will result in a dry fire and result in elevated temperatures and a fire hazard.

(All Drawings for Illustrative Purposes Only.)

CONTROL DIMENSIONS

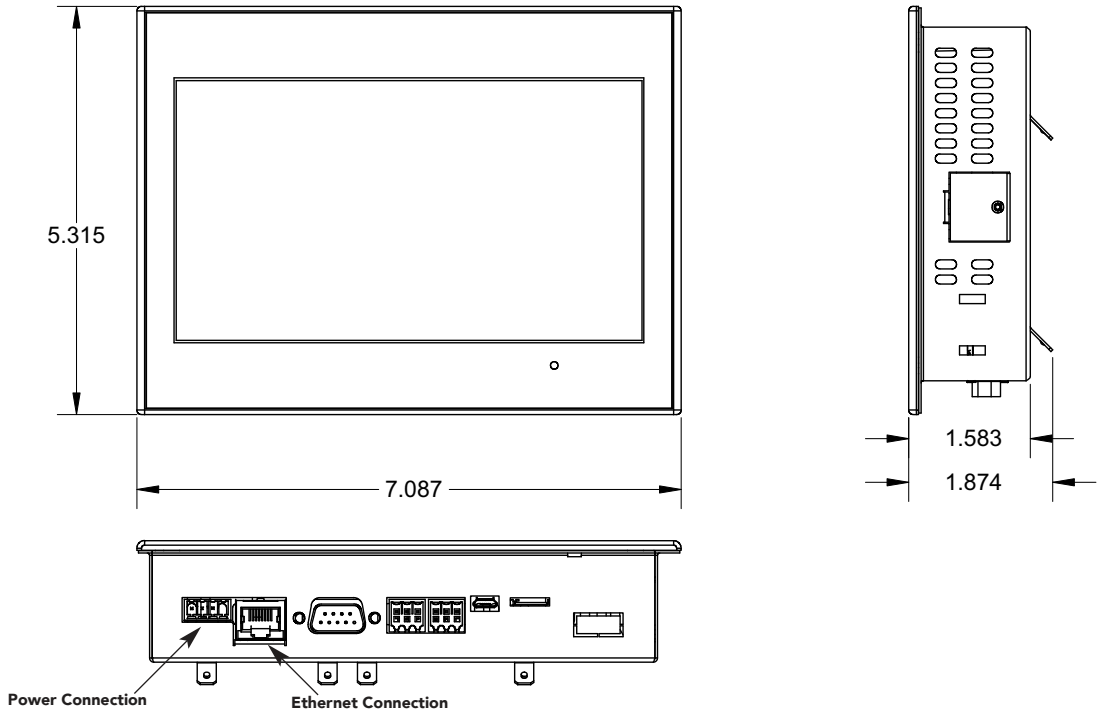

TEMPERATURE SENSOR INSTALLATION

- Locate sensor on a wall inside the steam room five (5) feet above the floor.

DO NOT LOCATE THE SENSORS NEAR OR ABOVE THE STEAMHEAD(S) AS THIS MAY CAUSE DIRECT STEAM EMISSION TO INTERFERE WITH STEAM-ROOM TEMPERATURE REGULATION.

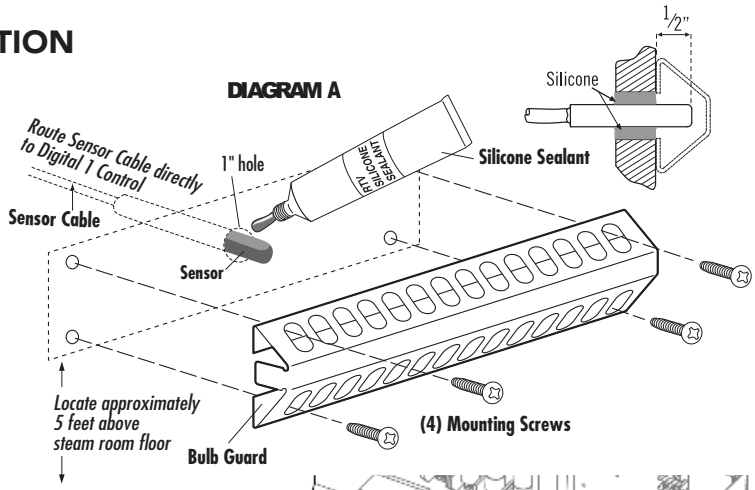

- Route sensor cable directly to PLC in the primary generator as shown.
- Do not route sensor cable with power wiring next to electric motors or any other location subject to electrical noise.
- Seal cable entrance to steam room with silicone.
- Protect sensor with bulb guard provided.

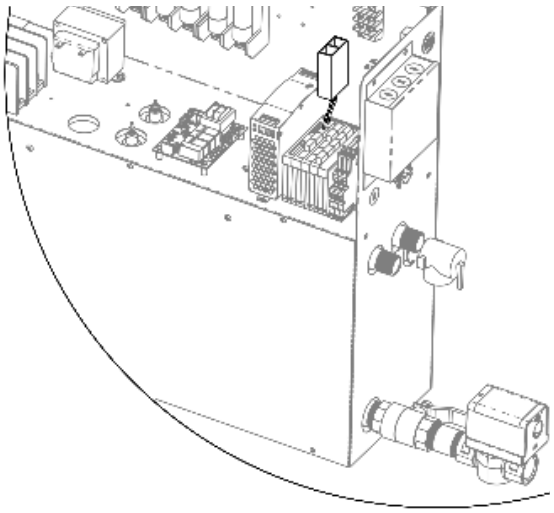

CAUTION Ensure all splices in the sensor cable are securely crimped or soldered and sealed with heat shrink tubing.

30 MINUTE ROOM TIMER

The 30 minute timer provides guests in the steam room an accurate and easy way to safely time their steam sessions. It is available as a Digital (104560) or Mechanical (CU-99216B) timer.

- This timer may only be fitted by a qualified electrician.

WARNING This timer uses the specific supply voltage. Fit the timer appropriately before connecting it to the main supply. Never touch the live contacts or components at the open back of the timer.

- Protection against touch contact must be ensured by a proper mounting. When fitting the timer, make sure that during normal operation it is impossible for the end user of the steam generator it was fitted in to remove the timer by pulling it to the front and exposing the live parts.
- Avoid any contact of the timer with water.
- The 30 minute room timer shall be installed to the external connection terminal block. See page 16 for location. The jumper shall be removed as per the wiring diagram.
- In the event the CX system has multiple generators, connect the 30 minute room timer, the emergency stop, and the room probe to generator 1.
- When connecting the digital timer the timer's neutral connects to the N terminal, the timer's power connects to the L terminal and the switched circuit from the timer connects to the S terminal. When connecting a mechanical timer only the L and S terminals are used

WARNING To prevent a shock hazard the 30 minute timer shall not be installed inside the steam room.

EXTERNAL TERMINAL CONNECTIONS

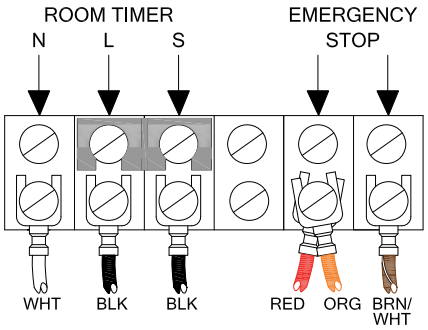

Remove jumper between L and S terminal when using room timer.

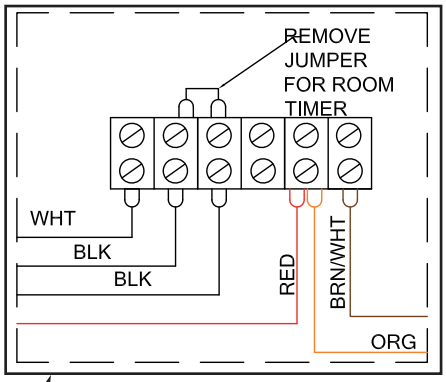

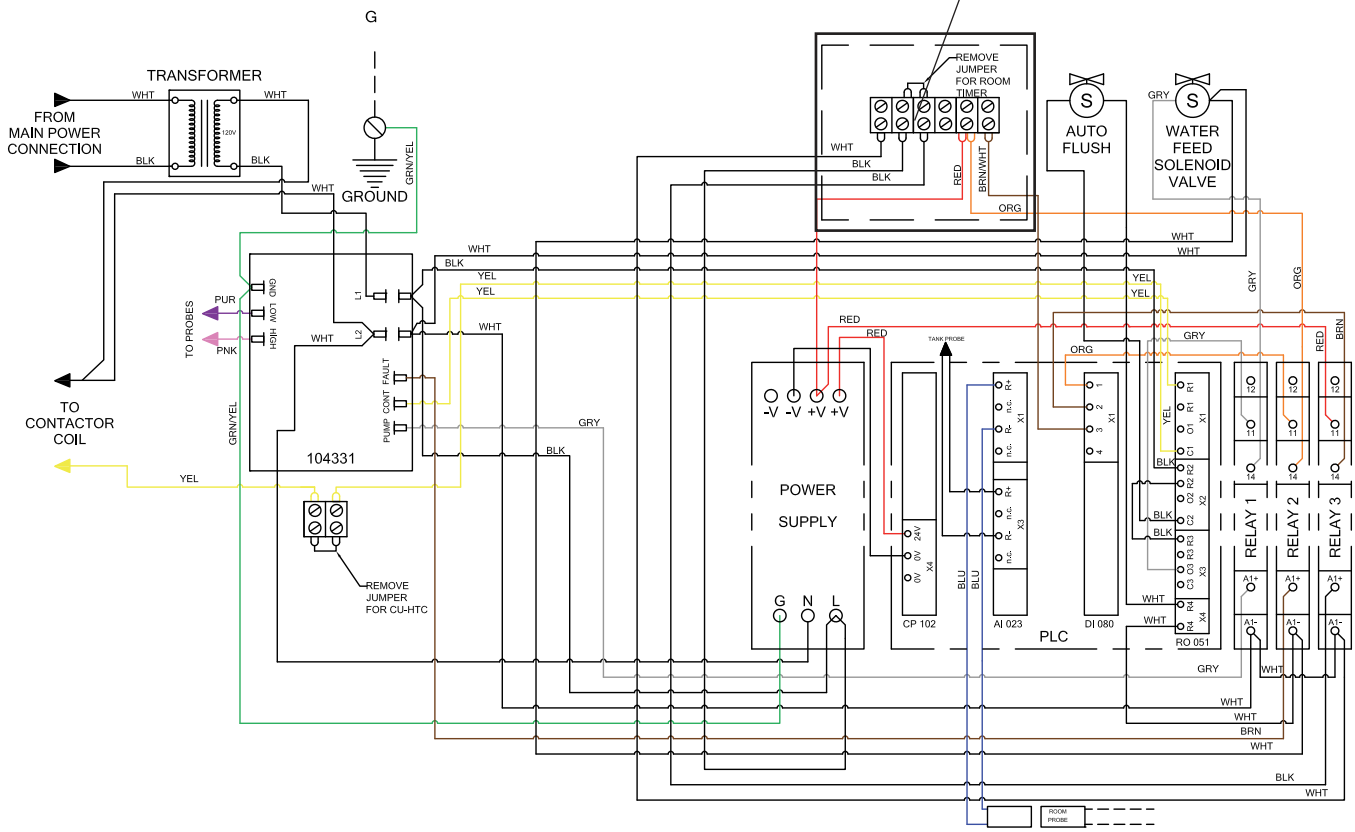

REPLACEMENT PARTS LIST

PART No.	DESCRIPTION	Generator
103036	Manual Drain Valve	ALL MODELS
99297	Safety Valve 15PSI	ALL MODELS
CX81500	CX AutoFlush	ALL MODELS
104423	Liquid Level Probe - Low Water	ALL MODELS
90229-1	Liquid Level Probe - High Water	ALL MODELS
103660	Fuse Block 2-POLE	ALL MODELS
99314	Power Fuse 60A 250V	ALL MODELS
104582	Contactor 50A 4-POLE	ALL 1-PHASE MODELS (EXCEPT CX0360)
104583	Contactor 50A 3-POLE	ALL 3-PHASE MODELS & CX0360 1-PHASE
104580	Transformer 240V-120V 100VA	ALL MODELS
104581	Water Feed Solenoid Valve w/Filter	ALL MODELS
104594	Power Supply, 120VAC TO 24VDC	ALL MODELS
104585	PLC	ALL MODELS
104584	Control	ALL MODELS
104273-30	Ethernet Cable, 30'	ALL MODELS
104637	Ethernet Hub	CX1600-CX5000
104632	Control Power Cable	ALL MODELS
104331	Water level Control Board	ALL MODELS
104593	RelayE, SPDT 6A 120V	ALL MODELS
104067	Room Termperature Probe	ALL MODELS
104596	Tank Temperature Probe	ALL MODELS
99096MS	Heating Element Gasket	CX0360 - CX0500
99096MX	Heating Element Gasket	CX0800 - CX1250
29091BMS	Heating Element 9kW 208V Single Phase	CX0360
29093BMS	Heating Element 9kW 208V Three Phase	CX0360
29091CMS	Heating Element 9kW 240V Single Phase	CX0360
29093CMS	Heating Element 9kW 240V Three Phase	CX0360
29121BMS	Heating Element 12kW 208V Single Phase	CX0500
29123BMS	Heating Element 12kW 208V Three Phase	CX0500
29121CMS	Heating Element 12kW 240V Single Phase	CX0500
29123CMS	Heating Element 12kW 240V Three Phase	CX0500
29123FMS	Heating Element 12kW 480V Three Phase	CX0500
29201BMS	Heating Element 20kW 208V Single Phase	CX0800
29203BMS	Heating Element 20kW 208V Three Phase	CX0800
29201CMS	Heating Element 20kW 240V Single Phase	CX0800
29203CMS	Heating Element 20kW 240V Three Phase	CX0800
29203FMS	Heating Element 20kW 480V Three Phase	CX0800
29241BMS	Heating Element 24kW 208V Single Phase	CX1000
29243BMS	Heating Element 24kW 208V Three Phase	CX1000
29241CMS	Heating Element 24kW 240V Single Phase	CX1000
29243CMS	Heating Element 24kW 240V Three Phase	CX1000
29243FMS	Heating Element 24kW 480V Three Phase	CX1000
29301BMS	Heating Element 30kW 208V Single Phase	CX1250
29303BMS	Heating Element 30kW 208V Three Phase	CX1250
29301CMS	Heating Element 30kW 240V Single Phase	CX1250
29303CMS	Heating Element 30kW 240V Three Phase	CX1250
29303FMS	Heating Element 30kW 480V Three Phase	CX1250

For other voltages and phases contact MrSteam

IP ADDRESS ASSIGNMENT

Each generator needs to be assigned an IP address by the CONTROL.

Single Generator System

1. Take the provided ethernet cable and connect it to the ethernet port on the right side of the generator as well as the ethernet port on the bottom of the CONTROL.
2. Power on both the generator and the CONTROL.
3. When the CONTROL powers up, it will tell you that at least one steam unit is offline
4. Click on "Steam Unit 1".
5. On the window that pops up, click on "**CONTINUE**".
6. The CONTROL will reboot.

Multi-Generator System

1. Take one of the provided ethernet cables and connect it to the ethernet port on the right side of the first generator as well as the ethernet port on the router.
2. Take another of the provided cables and connect it to the ethernet port on the bottom of the CONTROL as well as another ethernet port on the router.
3. Power on both the generator, the CONTROL, and the router.
4. When the CONTROL powers up, it will tell you that at least one steam unit is offline.
5. When the CONTROL powers up, use the buttons at the bottom of the screen to select the total number of generators in this system.
6. click on the first offline "Steam Unit" button.
7. On the window that pops up, click on "CONTINUE".
8. The CONTROL will reboot.
9. While the CONTROL is rebooting, connect the next generator to the router using another ethernet cable and turn on power to that generator.
10. Repeat steps 6-9 until all the CONTROL is rebooting and all generators have been connected.

PROGRAMMING

1. On the main page, tap the three horizontal line button in the upper left corner.
2. On the menu that comes up, select "Date\Time".
3. Adjust the date and time as necessary.
4. Press the "OK" button to return to the main page.
5. Repeat step 1, and select "Temp Setting".
6. Adjust the set temperature as necessary.
7. Press the "OK" button to return to the main page.
8. Repeat step 1, and select "Start\Stop Time".
9. There are 7 available settings, which can be toggled through using the arrows on the upper right. For each desired setting, select the days which is applies to and the start and stop time on those days.

   Note: These times act as triggers rather than ranges of operation. The generator will start up when the next set "start time" is.

   Note: If two settings have overlapping times, the setting with the lower number will be used.

10. Once all settings have been entered, press the back button in the lower left corner.

11. If you would like the system to start immediately, press "Manual Start" button on the main page. It will run until the next "Stop Time" preset.

ADDITIONAL FEATURES

Main Page

The generator can be manually started or stopped on this page. This button will also override any presets.

Status Page

This screen shows the status of generator and the steam room itself. In addition, Steam Status "SS", Water Level Status "WL", and Auto Flush Status "AF" can be seen in the bottom right corner of every screen. Green and White indicates a normal condition. Orange indicates a standby mode. Red indicates an error or off. With the Auto Flush, white indicates it is off, and green indicates it is on.

Alarms Page

This screen shows any alarms that may have occurred. Alarms colored red are still active while grayed out ones are resolved themselves. The aqua colored alarm is the currently selected one. If the button is pressed, more details about the alarm will appear in a new window. The button clears the list of all resolved alarms.

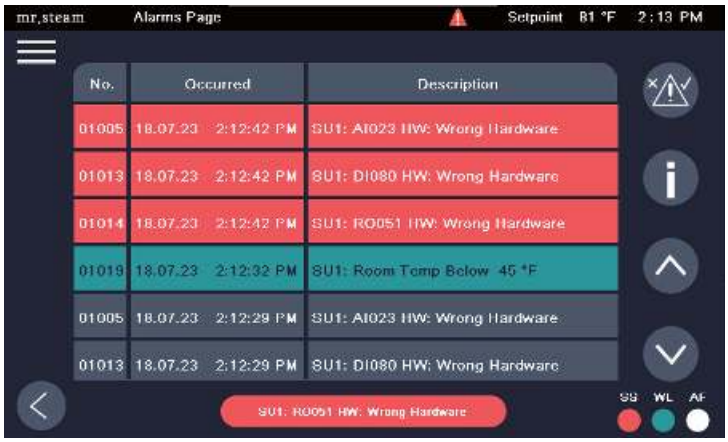

ADDITIONAL FEATURES

Settings Page

Some settings specific to the CONTROL can be set from this page. The aligns with the cleaning time. This feature disables the touch screen for that period of time so it can be cleaned. The recalibrates the touch screen. "Start Mode" determines how the system starts when a timer is connected. When the start mode is set to "Steam" the generator will create steam and heat the the room to the set point for the first 45 minutes of operation, even if the timer is off. When the start mode is set to standby the system will maintain the water temperature in the unit but not create steam until the timer is turned on.

IOM

A digital version of the IOM is available on the CONTROL

About Page

This page has software information. In addition, if the system needs to change the number of generators, that can be done from this page. When multiple generators are present the "Steam Unit No." will have toggle buttons which will allow the user to scroll through the different software versions of each generator.

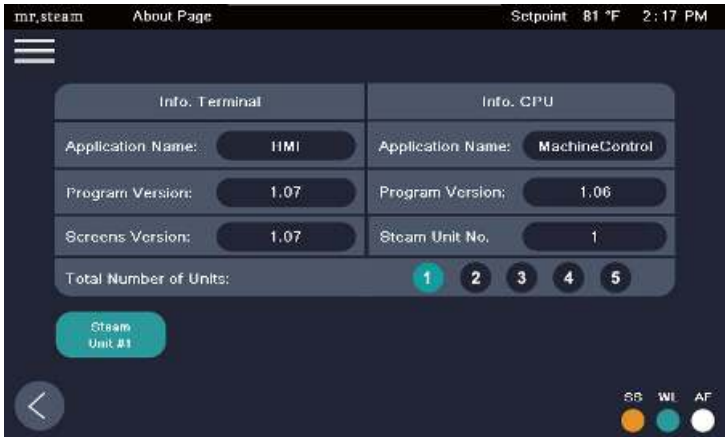

AutoFlush Operation:

- Each time the CX steam generator is turned off (either manually or by a programmed off time), the AutoFlush sequence will begin
- The AutoFlush valve will open to drain the sediment rich water from the tank, and the feed solenoid valve will open to bring in fresh water to quench the drain water.
- The system will drain and flush for 10 minutes, after 10 minutes the valve will close and the unit will refill with water

CAUTION Scalding hazard, the CX unit drains at 140 *F, do not drain into a steam enclosure or any location where accidental contact with drain water may occur

TROUBLESHOOTING

WARNING Applies to 1-2

1. Electric shock hazard. MrSteam steam generators are connected to high voltage and contain live electrical components. All installation and service to be performed by qualified and licensed electricians only. Installation or service by unqualified persons or failure to use MrSteam parts may result in property damage or in a personal injury.
2. Do not disassemble or service any components. Internal components contain no serviceable parts.

NOTICE The model and serial number is printed on the data plate on the front of the steam bath generator. Please have this information available when contacting Technical Services.

Note: Disconnect all connections going to the steam generator. When disconnecting the AutoFlush connector, close manual drain valve.

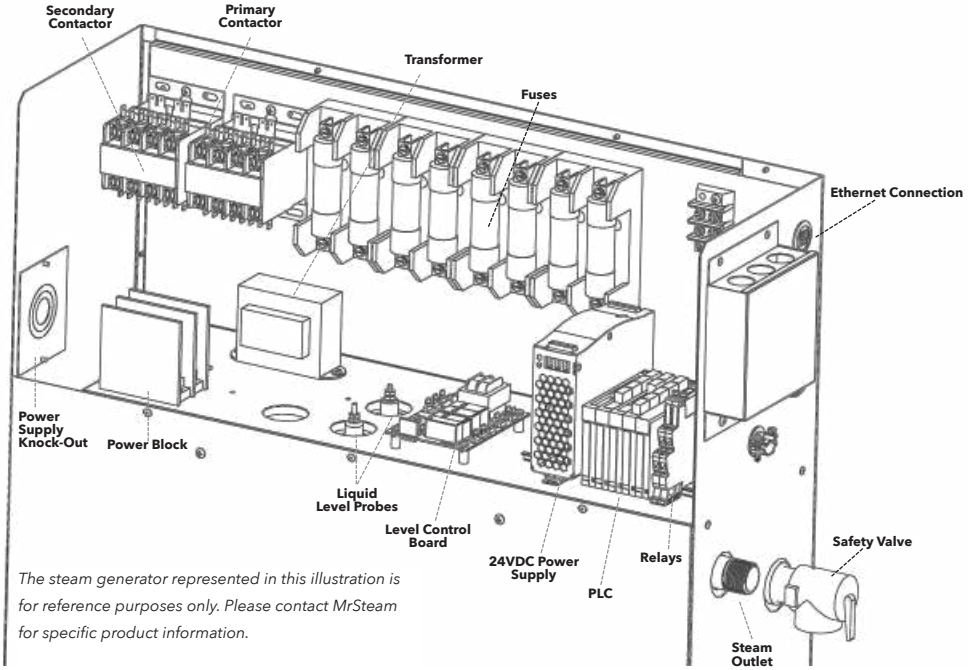

The steam generator represented in this illustration is for reference purposes only. Please contact MrSteam for specific product information.

Step 1 Check main incoming power to the unit.

Step 2 Ensure the wires from the primary side of the transformer are connected to the quick connect tabs on the line side of the contactor.

Step 3 Verify that 120 VAC is coming out of the transformer, BLACK & WHITE wires, into the circuit board.

Step 4 Push the manual ON button on the CONTROL to run the generator. Make sure the steam room is empty.

Step 5 Verify 120 VAC to the water feed solenoid, GRAY & WHITE wires (will fill when needed).

Step 6 Temporarily short out the WLS (Purple wire) and GROUND (Green wire) terminals and verify that the contactor engages.

Step 7 Check main voltage on the load side of the contactor when it is engaged.

Contactor Test Points

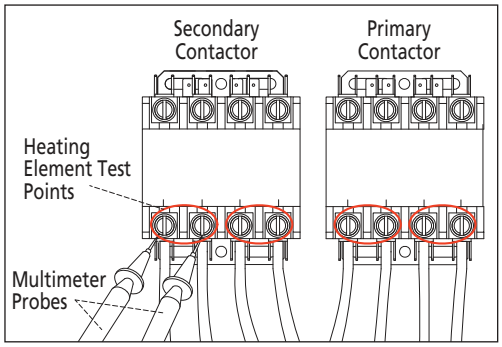

Note: For illustrative purposes only. Number and configuration of contactors in CX Steam Generators varies by model.

(All Drawings for Illustrative Purposes Only.)

TROUBLESHOOTING GUIDE

FAULTY WATER FEED SOLENOID & HEATING ELEMENT

ERROR	PROBABLE CAUSE	SUGGESTED REMEDY
Emergency Stop Is Active	The emergency stop button has been pressed	Disengage emergency stop switch
Steam Unit X: Communication to CONTROL Interrupted	There is an issue with the ethernet cables or their connections	Check to make sure the connections are secure
		Replace cable
		Replace router
Steam Unit X: Has a Hardware Error	Damage to the PLC	Replace PLC
Steam Unit X: Check X Voltage Supply	Damage to the 24VDC power supply	Replace 24VDC power supply
Steam Unit X: X Has A Cable Break At Input 1	Room Probe Disconnected	Check to make sure the connections are secure
		Replace cable
Steam Unit X: X Has A Cable Break At Input 2	Tank Temperature Probe Disconnected	Check to make sure the connections are secure
		Replace cable
Start\Stop Time Settings X: Invalid	Start\Stop Time Setting X has a start time which is after the stop time	Adjust the setting
Start\Stop Time Settings Day X: Overlap	Multiple Start\Stop Time Settings have Day X activated	Adjust the setting
Steam Unit X: Low Water Level Fault	Heating Element scaling or possible failure	Remove Heating Element, check for scaling or failure. Remove any scaling or replace element.

mr.steam®

Feel Good Inc.®

www.mrsteam.com

Products, information and specifications are subject to change without notice. For more information call Sales & Support at 1.800.767.8326 (East Coast) or 1.800.727.8326 (West Coast) for more information.

mr.steam® hello@mrsteam.com • www.mrsteam.com

43-20 34th Street, Long Island City, NY 11101 1.800.76.STEAM
9410 S. La Cienega Blvd. Inglewood CA 90301 1.800.72.STEAM

2021 © Mr.Steam and des., AirTempo, AromaFlo, AutoFlush, AutoSteam, AudioWizard, Butler Package, ChromaSteam, Clean Steam...Every Time, Club Therapy, Digital 1, Express Steam, From Bathroom to Spa, HomeWizard, iButler, iTempo, iTempo/Plus, iGenie, iSizing, iSteam, Linear Steamhead, Making Wellness a Way of Life, MusicTherapy, SmartSizing, Spa Package, Steam Genie, Steam@Home, SteamStart, SteamTherapy, Tala, Tala Bath & Body Therapy The Intelligent Steambath, Valet Package, and Virtual Spa System are registered trademarks of Mr.Steam.

PUR100626 REV 7.25