Installation, Operation and Maintenance Manual

Steambath Generator Systems

Residential Models: MS90R-MS400R and MSSUPER1R - 3R

IMPORTANT: Leave this Material with the home owner

mr.steam® | Feel Good Inc.®

READ ME FIRST!

WARNING As you follow these instructions, you will notice warning and caution symbols. This blocked information is important for the safe and efficient installation and operation of this generator. These are types of potential hazards that may occur during installation and operation:

WARNING Indicates a potentially hazardous situation, which, if not avoided, could result in death or serious injury.

CAUTION Indicates a potentially hazardous situation, which, if not avoided may result in minor or moderate injury or product damage.

IMPORTANT NOTE: This highlights information that is especially relevant to a problem-free installation.

All information in these instructions is based on the latest product information available at the time of publication. MrSteam reserves the right to submit changes at anytime without notice. More current instructions may be available at www.mrsteam.com.

When installing and using this electrical equipment, basic safety precautions should always be followed, including the following:

IMPORTANT SAFETY INSTRUCTIONS

1. READ AND FOLLOW ALL INSTRUCTIONS

2. **WARNING** Supervise children at all times

3. **WARNING** Steam is hot and can cause injury or death if improperly used. Steam rooms contain steam and elevated temperatures. Please read and observe all warnings in this manual before installing or using a steam room.

4. **WARNING** To reduce the risk of injury:

A. The wet surfaces of steam enclosures may be slippery. Use care when entering or leaving.

B. The steam head is hot. DO NOT touch the steam head and avoid the steam near the steam head.

C. Prolonged use of the steam system can raise excessively the internal human body temperature and impair the body's ability to regulate its internal temperature (hyperthermia). Limit your use of steam to 10-15 minutes until you are certain of your body's reaction.

D. Excessive temperatures have a high potential for causing fetal damage during the early months of pregnancy. Pregnancy or possibly pregnant women should consult a physician regarding correct exposure.

E. Obese persons and persons with a history of heart disease, low or high blood pressure, circulatory system problems, or diabetes should consult a physician before using a steambath.

F. Persons using medication should consult a physician before using a steambath since some medication may induce drowsiness while other medications may affect heart rate, blood pressure and circulation.

SAVE THESE INSTRUCTIONS

HYPERTHERMIA occurs when the internal temperature of the body reaches a level several degrees above the normal body temperature of 98.6° F. The symptoms of hyperthermia include an increase in the internal temperature of the body, dizziness, lethargy, drowsiness, and fainting. The effects of hyperthermia include:

a) Failure to perceive heat;
b) Failure to recognize the need to exit the steambath;
c) Unawareness of impending risk;
d) Fetal damage in pregnant women;
e) Physical inability to exit the steambath; and
f) Unconsciousness.

WARNING The use of alcohol, drugs, or medication can greatly increase the risk of hyperthermia.

WARNING

REDUCE THE RISK OF OVERHEATING AND SCALDING

1. EXIT IMMEDIATELY IF UNCOMFORTABLE, DIZZY OR SLEEPY. STAYING TOO LONG IN A HEATED AREA IS CAPABLE OF CAUSING OVERHEATING.
2. SUPERVISE CHILDREN AT ALL TIMES.
3. CHECK WITH A DOCTOR BEFORE USE IF PREGNANT, DIABETIC, IN POOR HEALTH OR UNDER MEDICAL CARE.
4. BREATHING HEATED AIR IN CONJUNCTION WITH CONSUMPTION OF ALCOHOL, DRUGS, OR MEDICATION IS CAPABLE OF CAUSING UNCONSCIOUSNESS.
5. DO NOT CONTACT STEAM HEAD OR STEAM AT THE STEAM HEAD.

REDUCE THE RISK OF SLIPPING AND FALL INJURY

1. USE CARE WHEN ENTERING OR EXITING THE STEAM ROOM. FLOOR MAY BE SLIPPERY

NOTE: FOR ADDITIONAL SAFETY CONSIDERATIONS SEE OWNER"S MANUAL WHICH IS KEPT:_____
THE OWNER'S MANUAL CAN BE FOUND AT WWW.MRSTEAM.COM

USE OF STEAM ROOM IN CONJUNCTION WITH CONSUMPTION OF ALCOHOL CAN BE DANGEROUS AND CAN RESULT IN INJURY THROUGH SLIP AND FALL OR OTHERWISE.

mr.steam® 43-20 34th Street , Long Island City NY 11101 1 800 76 STEAM www.mrsteam.c PUR100378 3.22

Not Actual Size

The manual supplied with the generator includes a peel and stick warning label. Its proper use is an essential part of providing a safe environment for steam room users. The peel and stick warning label must be applied to the wall of the shower or steam enclosure, at a point that is visible to all users. Failure to install this sticker may result in serious injury or death. The location where this owner's manual is kept shall be written in the space provided on the label using permanent ink. For a replacement warning label contact MrSteam customer service at 1-800-76-STEAM or hello@mrsteam.com.

RESIDENTIAL STEAMBATH GENERATOR SYSTEMS

INSTALLATION, OPERATION & MAINTENANCE MANUAL

MODELS: MS90R, MS150R, MS225R, MS400R, MSSUPER1R, MSSUPER2R, MSSUPER3R

MODEL _____

SERIAL NO. _____

TABLE OF CONTENTS

Important Safety Instructions 1
Select Your MrSteam Model 3
Generator Specification Chart 3

INSTALLER SECTION

Before Installing 4
Steam Room Guidelines 4
Water Quality Information 5
Locating the Steam Generator 5
Typical Installation Instructions 6
Typical Multi-Unit Installation 7
Installation: Plumbing, Water Supply, Drain, Steam Outlet
Safety Valve, Drip Pan, AromaSteam 8
AromaSteam Steamhead Installation 9
Steam Generator Dimensions 10
Electrical Specifications & Field Power Wiring 11
Wiring Diagrams 12-13
Optional Tandem Cable Diagram 13
Initial Start-Up & Checkout 14
Optional & Accessary Equipment 14
Troubleshooting 14
System Status Codes 15
Liquid Level Control Board 15
Optional AutoFlush System 16
Optional Drip Pan 17
Optional Express Steam 17
Parts Identification Diagrams 18
Replacement Parts List 19

CONTROL INSTALLATION

Before Installing 20
Control Rough-In 20

HOMEOWNER SECTION

Important Safety Instructions 21
Setting Steam Bath Temperature & Duration 22
Safety & Operating Info 22
Care Tips for Controls and Generator Maintenance 22
Using the AromaSteam Essential Oils 23
Warranty 23

mr.steam® hello@mrsteam.com • www.mrsteam.com
43-20 34th Street, Long Island City, NY 11101 TEL: 1 800 76 STEAM
9410 S. La Cienega Blvd. Inglewood, CA 90301 TEL: 1 800 72 STEAM

c UL us LISTED NOM 596 CE Designed, Engineered and Assembled in the USA

PUR 100597A REV 8.25

SELECT YOUR MrSteam

MrSteam @ Your Fingertips:
Start working smarter with MrSteam's mobile sizing app, now available for the iPad®, iPod® and most smart phones. Visit **mrsteam.com** to size your generator automatically or go directly to: **http://isizing.mrsteam.com**

Materials of construction, room size and special design features such as large glass areas, all affect the steam generator model selection.	
1. Measure length, width & height in feet of the steam/shower or tub/shower	
Multiply the length ____ x Width ____ x Height ____ =	ROOM VOLUME
2. Construction Materials:	
For ceramic or porcelain tile on cement board or mortar bed	Add 0%
For natural stones: natural marble, stone, shale, glass block or concrete	Add 50%
For acrylic or fiberglass subtract	Subtract 40%
3. Ceiling Height: For each foot above 8 feet (max 10 Feet)	Add 15% to the volume with material adjustment
4. Total Room Volume	

Compare your **Room Volume** to the **Chart** below and select the appropriate model.

WARNING In considering the purchase or use of this steambath system, please note that if you are pregnant, have a coronary condition, are in poor health, are being treated for any other medical condition, or are using medication or drugs, MrSteam recommends that you obtain the approval of a physician before use.

For information about this product and safety issues, please call 1.800.76.STEAM

IMPORTANT NOTES:
For steam rooms constructed of acrylic or synthetic materials, select next lower-rated MS model.

The MrSteam Sizing Chart allows for up to 60 feet of insulated steam piping from the MS generator to the steam room. If the 60 foot steam piping is exceeded consult with factory. The steam generator control locations must be taken into account. A 30 foot cable is standard. Contact MrSteam to purchase an optional 60 ft. cable PN 104678-60. The maximum cable length is 60 feet.

RESIDENTIAL STEAM GENERATORS SPECIFICATION CHART

	Model No.	KW	Amps (for 240v/1PH)†	Wire Size‡	Total Adj. Room Vol.	Water Usage Gallons††	Dimensions*	Shipping Wt. (lbs)**
	MS90R	5	21	10	0-71	0.67	14½" L x 14¾"H x 6¾" D	27
	MS150R	6	25	8	72-107	0.80	14½" L x 14¾"H x 6¾" D	27
	MS225R	7.5	32	8	108-161	1.0	14½" L x 14¾"H x 6¾" D	27
	MS400R	9	38	8	162-257	1.2	14½" L x 14¾"H x 6¾" D	27
	MSSUPER1R	10	42	8	258-339	1.4	17" L x 18½"H x 7⅞" D	39
	MSSUPER2R	12	50	6	340-411	1.6	17" L x 18½"H x 7⅞" D	39
	MSSUPER3R	15	63	4	412-482	2.0	17" L x 18½"H x 7⅞" D	39

IMPORTANT NOTES:
- Add 2401 suffix to Model No. for 240V/1Ph; Add B1 suffix to Model No. for 208V/1Ph
- All MrSteam MS Models are cULus Listed and CE approved

NOTICE

All MS Generators available in 240v/1PH, 208v/1PH and other voltages/phases
† Amps are for 240/1PH rated units
‡ Wire size (AWG) based on minimum 90°C rated THHN copper conductors
Refer to the National Electrical Code for other types of conductors
See MrSteam Installation and Operation Manual for complete dimensional and installation information

* **Dimensions are for generator only, without AutoFlush® or plumbing features**
** Shipping weight & pricing are for generator only, without control or steamhead
†† Water usage based on 20 minutes of operation

BEFORE INSTALLING

Carefully inspect the Steam Generator and packaging for shipping damage. In the event of shipping damage, please contact the carrier for claim information. Our customer service department can assist you with any missing or damaged parts.

Read these instructions before installation or service. Although this MS steambath generator has been fully qualified for shipment by MrSteam®, the following must be reviewed for proper, safe and enjoyable steam bathing:

1. Verify that the model and accessories specifications are correct for the incoming line voltage.
2. Insure steambath generator has been correctly sized for the steambath room. Pay particular attention to room volume and construction. If any questions, please refer to MrSteam sizing and selection guide on page 3.
3. Marble or glass walls or ceilings. "ENLARGE" the room's size, requiring a generator larger than one based only on the room's cubic foot (L x H x W) volume.
4. The physical size of the unit, clearance for plumbing servicing, and its distance from the steam room must all be considered before final installation.
5. Consider any controls and accessories before initiating installation. Read the Installation and Operation Manual of all controls and accessories available at www.mrsteam.com technical downloads.

6. **NOTICE** Record the serial number of the steam generator in the space provided in the table of contents of this manual.

STEAM ROOM GUIDELINES

1. Steam room must be completely enclosed, with full walls, door, floor and ceiling.
2. It is recommended that a gasketed door is used for steam containment.

3. **WARNING** To prevent slip and fall hazard, nonslip flooring, nonslip floor strips, or tiles designed for floors must be installed in the steam room.
4. Check the suitability of any materials with the manufacturer. Walls and ceilings must be constructed of water-resistant, non-corrosive surface, such as tile, marble, molded acrylic, or other non-porous material.
5. The ceiling should be sloped to prevent dripping of condensate.
6. Provide a floor drain.
7. No heating, venting or air conditioning devices should be installed inside the steam room.
8. Steam room tile construction information is available from the Tile Council of America, Inc. by purchasing the TCA Handbook for Ceramic Tile Installation. Tel. (864) 646-8453 or www.tileusa.com.
9. Windows that are part of the steam room should be double paned and tempered safety glass.
10. Limit steam room ceiling height to 8 feet. Exceeding 8 feet may require a higher-rated steam generator.

WARNING The peel and stick warning label located in this manual is an essential part of providing a safe environment for steam room users. The peel and stick warning label must be applied to the wall of the shower or steam enclosure, at a point that is visible to all users. Failure to install this sticker may result in serious injury or death. The location where this owner's manual is kept shall be written in the space provided on the label using permanent ink. For a replacement warning label contact MrSteam customer service at 1-800-76-STEAM or hello@mrsteam.com

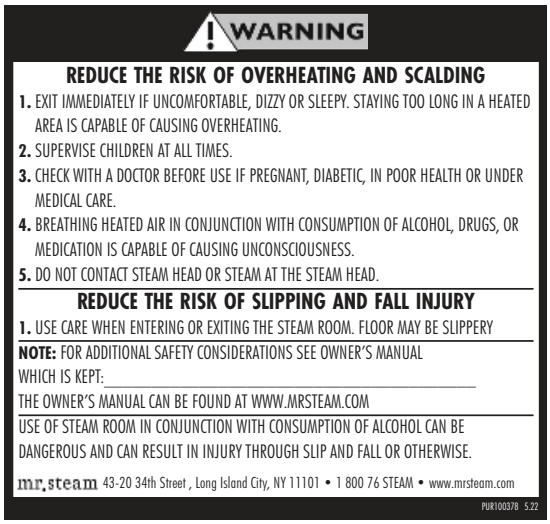
WARNING

REDUCE THE RISK OF OVERHEATING AND SCALDING

1. EXIT IMMEDIATELY IF UNCOMFORTABLE, DIZZY OR SLEEPY. STAYING TOO LONG IN A HEATED AREA IS CAPABLE OF CAUSING OVERHEATING.
2. SUPERVISE CHILDREN AT ALL TIMES.
3. CHECK WITH A DOCTOR BEFORE USE IF PREGNANT, DIABETIC, IN POOR HEALTH OR UNDER MEDICAL CARE.
4. BREATHING HEATED AIR IN CONJUNCTION WITH CONSUMPTION OF ALCOHOL, DRUGS, OR MEDICATION IS CAPABLE OF CAUSING UNCONSCIOUSNESS.
5. DO NOT CONTACT STEAM HEAD OR STEAM AT THE STEAM HEAD.

REDUCE THE RISK OF SLIPPING AND FALL INJURY

1. USE CARE WHEN ENTERING OR EXITING THE STEAM ROOM. FLOOR MAY BE SLIPPERY

NOTE: FOR ADDITIONAL SAFETY CONSIDERATIONS SEE OWNER'S MANUAL
WHICH IS KEPT:_____
THE OWNER'S MANUAL CAN BE FOUND AT WWW.MRSTEAM.COM

USE OF STEAM ROOM IN CONJUNCTION WITH CONSUMPTION OF ALCOHOL CAN BE DANGEROUS AND CAN RESULT IN INJURY THROUGH SLIP AND FALL OR OTHERWISE.

mr.steam 43-20 34th Street , Long Island City, NY 11101 • 1 800 76 STEAM • www.mrsteam.com

PUR100378 5.22

Not actual size

WARNING Never use damaged equipment, doing so may result in an inoperative or hazardous installation.

- Discontinue use of the steam generator and control if the steam generator or control are damaged or otherwise not functioning properly. Doing so may result in an inoperative or hazardous installation
- **ELECTRICAL SHOCK HAZARD.** MrSteam steam generators are connected to 208V or 240V line voltage and contain live electrical components. All installation and service to be performed by qualified and licensed electricians and plumbers only. Installation or service by unqualified persons or failure to use MrSteam parts may result in property damage or in a hazardous condition.
- The MS series of steam generators are for residential use only. Commercial or other nonresidential applications void the warranty and may adversely affect product performance and may represent a safety hazard.

CAUTION If acrylic, fiberglass or other non-heat resistant materials are used as part of the steam room enclosure. Consult with the material manufacture and see pg. 9, "Installing the Steamhead" for additional details.

IMPORTANT NOTES:

This document contains important safety, operation and maintenance information. Leave this document with the homeowner. Do not discard this document.

The following general information should be used in conjunction with consultations with an architect, designer and contractor in determining factors necessary in providing a suitable and safe steam room. MrSteam steam generators are intended to be operated with MrSteam TempoTouch®, TempoFlex®, iSteam®, AirTempo®, iTempo/Plus® and iTempo® controls only, and are to be installed strictly in accordance with the specific instructions contained in this manual and as supplied in the manuals provided with the controls or accessories.

WATER QUALITY INFORMATION

For optimum results, the water supply should be tested prior to installation. If the mineral content exceeds the following recommended limits, various external treatment processes are recommended to correct the problem.

NOTICE An analysis of the on-site water must be made by a recognized and reliable water treatment company to ascertain the existing condition and treatment required.

Poor water quality can affect efficiency or result in steam generator damage. Water contains impurities in solution and suspension. These impurities concentrate in the generator. The concentration of these impurities increases as more feedwater is introduced into the generator and steam is produced. If the suspended solids are allowed to concentrate beyond certain limits, a deposit or "scale" will form on the generator internal surfaces. This deposit can interfere with the proper generator operation and cause generator failure. The concentration of these impurities is generally controlled by the water quality and by periodic draining of the generator.

RECOMMENDED FEEDWATER QUALITY

Hardness, ppm 8 – 85 (~0.5 – 5 gpg)
P-Alkalinity, ppm 85 – 410 (~5 – 24 gpg)
T. Alkalinity, ppm 200 – 500 (~7 – 0 gpg)
pH (strength of alkalinity) 8.0 – 11.4

Every 2 months, or more often in "hard" water areas, the manual drain valve should be opened fully flushing out accumulated materials, salts and other particles which are natural by-products of boiling water. The optional AutoFlush System feature automatically drains the MrSteam® generator following each use. A time delay allows the water to cool down (about two hours) before it drains by gravity for a safe and gentle operation.

LOCATING THE STEAM GENERATOR

Select a location as near as practical to the steam room. Typical locations include: closet, vanity cabinet, heated attic or basement.

NOTICE

The standard length of the cable for connecting the control to the steam generator is 30 feet. The steam generator and control must be located accordingly. A 60 foot cable is available as a special order part for all controls PN 104678-60. The maximum cable length is 60 feet.
IMPORTANT NOTE: The control cable should be run in a dedicated 1" conduit to facilitate installation and service.

WARNING **DO NOT** route TempoTouch®, TempoFlex®, iSteam®, AirTempo®, iTempo/Plus® and iTempo® control wiring inside conduit together with power lines or close to hot water or steam piping. Doing so may result in an inoperative or hazardous installation.

WARNING **(Items 1-4)**

1. **DO NOT** install steambath generator inside steam room, a shock hazard will occur
2. **DO NOT** install steambath generator outdoors or wherever environmental conditions may result in a shock hazard or affect performance of the generator.
3. To prevent damage to the steam generator or a fire hazard **DO NOT** install steambath generator near flammable or corrosive materials or chemicals such as gasoline, paint thinners, or the like. Installation in areas having high concentrations of chlorine (such as pool equipment room) must be avoided.
4. Burn Hazard. Steam piping, safety valve, drain valve and plumbing become hot during operation and remain hot after shutdown for a period of time. Provide appropriate protection, including insulating plumbing lines. Avoid plumbing runs and steamhead locations that can come in contact with bathers.

CAUTION **(Items 5-7)**

5. **DO NOT** install steambath generator or plumbing lines in unheated attic or any locations where water could freeze and cause pipes to rupture and cause property damage.
6. Install steambath generator on a solid and level surface. Provide supports under steam generator when wall mounting. Keyhole slots are provided for wall mounting. Insure the steam generator is properly secured and level when mounting with keyhole slots to prevent damage to the steam generator.
7. Install steambath generator in an upright position only to prevent damage to the generator.

IMPORTANT NOTES: (Items 8-12)

8. Install anti-water hammer device as necessary.
9. Provide a minimum of 12 inches at both ends and top of the steam generator or as required for servicing. See page 10.
10. Provide unions as required to facilitate installation and disconnection of piping.
11. MrSteam controls can be located inside the steam room or on the outside of the steam room. See the Control Installation Manual for your specific control package for specific details.
12. The MS series of steam generators are for residential use only. Commercial or other nonresidential applications void the warranty and may adversely affect product performance and may represent a safety hazard.

NOTICE MrSteam Generators (inclusive Controls) are CE and UL listed.

WARNING

Suitable for operation in ambient not exceeding 45 °C (113° F)

TYPICAL MrSteam INSTALLATION

NOTICE **Drawings for illustrative purposes only.**
Consult with qualified designer, architect or contractor for steam room construction details.

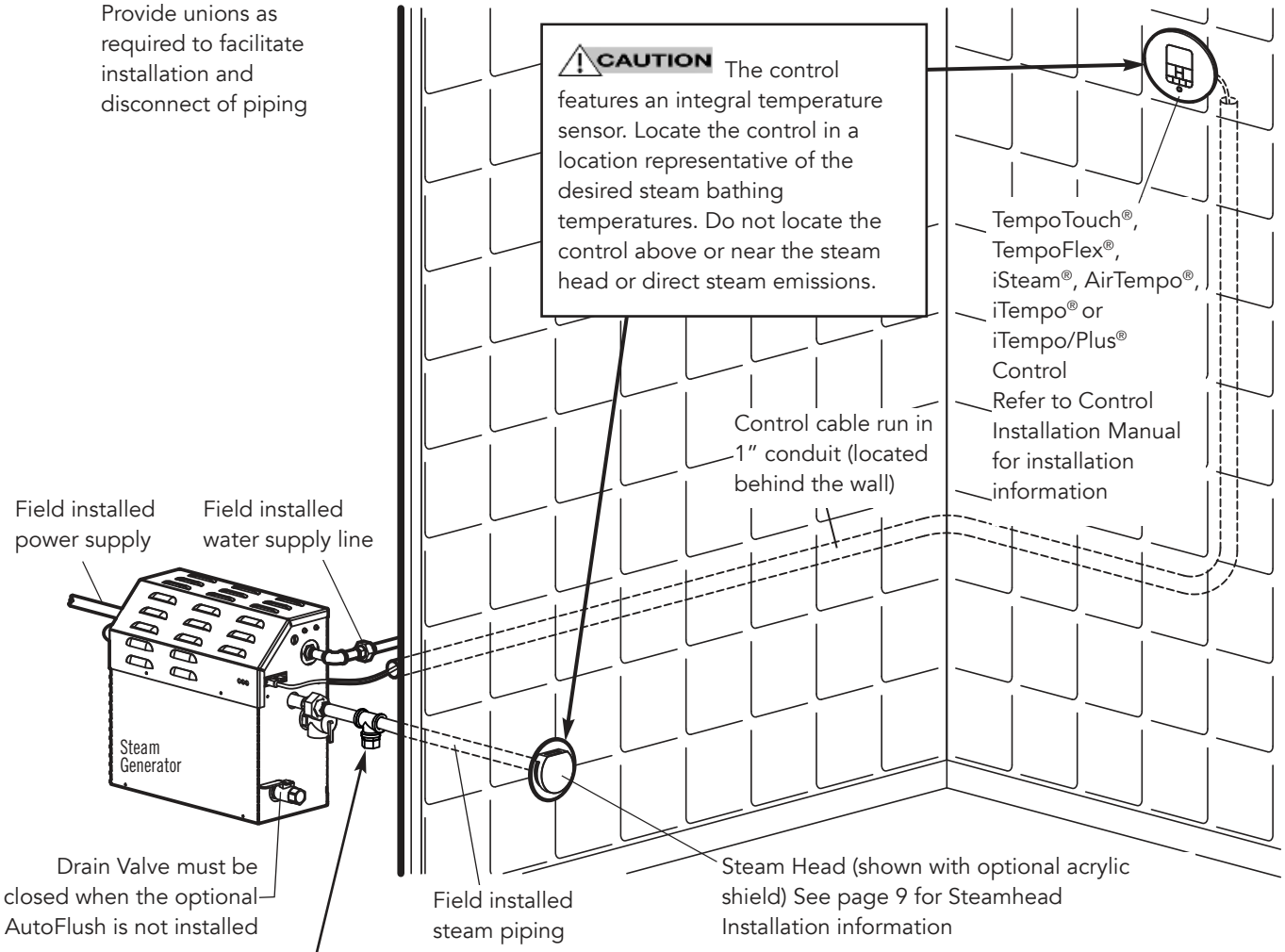

When installing the optional AromaSteam, install a 90-degree T in the steam piping. See the AromaSteam Installation Manual for complete information.

CAUTION To avoid unintentional steambath operation, do not locate the control where other controls, accessories, shower heads, valves, body sprays or similar within the shower could cause confusion or interfere with the MrSteam control's intended use and function.

All drawing are for illustrative purposes only

TYPICAL MULTI-UNIT INSTALLATION

(shown with optional AutoFlush)

1. Install each steam generator as in a single installation. Install generators as close as practical to each other, not exceeding 10 feet. The interconnecting cable length is 12 feet.

2. ⚠ **WARNING** Shock Hazard. Power must be disconnected at the main electrical supply. Remove steam generator covers. Retain screws and covers for reuse.

3. Connect the TempoTouch®, TempoFlex®, iSteam®, iTempo®, iTempo/Plus® or AirTempo® control to either unit as per the Installation Manual supplied with each control. The control must be connected to the primary unit.

4. Remove one knock-out on each generator as shown. Insert the ends of interconnecting cable provided (PN 103904) through the knock-outs as shown in diagram. Connect each end to the printed circuit board connector labeled "TANDEM" as shown.

5. Prevent the interconnecting cable from contacting hot surfaces such as steam outlet, safety valve and the like.

6. Connect separate plumbing and power supplies for each unit. Replace covers with cover screws.

7. Provide unions as required to facilitate installation and disconnection of piping

NOTICE

The secondary unit will de-energize when the steam room reaches steam bathing temperature resulting in a more gentle and energy efficient operation.

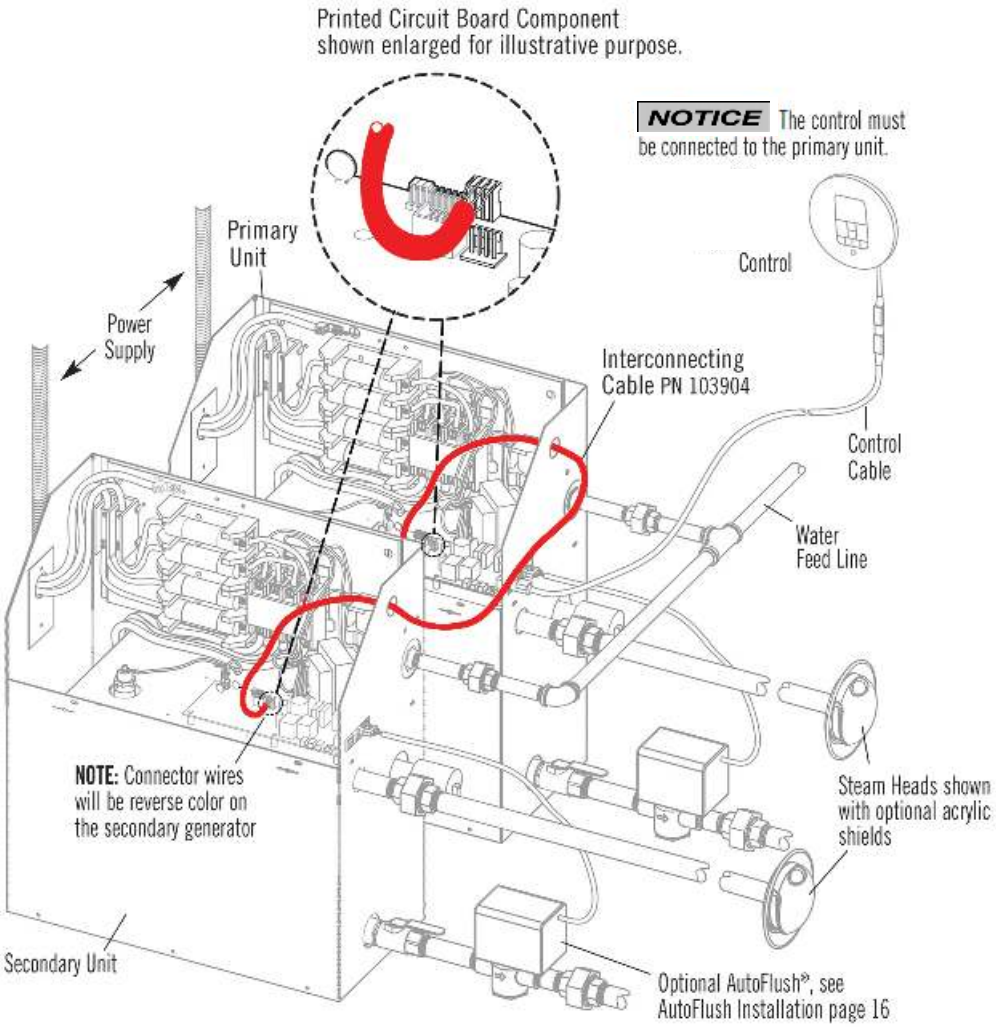

All drawing are for illustrative purposes only

INSTALLATION

PLUMBING

All plumbing shall be performed by a qualified licensed plumber and in accordance with applicable National and local codes.

1. Use unions on all pipe connections.
2. Use only brass piping or rigid copper tubing as permitted by codes.
3. **DO NOT** use black, galvanized, PVC pipe or PEX except as noted below.

WARNING Water supply and steam piping must be flushed to remove flux and other debris prior to connecting the steam generator. Failure to flush the steam piping may result in flux poisoning or a hazardous condition. Failure to flush the steam piping may result in blockage or an inoperable system.

WATER SUPPLY (3/8" NPT)

1. Connect to cold water line.

NOTICE Water feed line may be flexible copper tubing, braided hose, PVC or PEX if permissible by local codes.

2. Provide a shut off valve in the water supply line upstream of the steambath generator.
3. **DO NOT** overheat inlet solenoid valve with solder connections. Overheating will damage parts.
4. Flush inlet water line thoroughly before making connection to unit.
5. Strainer recommended upstream of feed water connection.
6. In order to reduce operating noise, reducing feed water pressure to between 15 - 20 psi is recommended. Optional pressure reducing valve part number 104198.
7. Provide anti-water hammer device as required.
8. Install an approved backflow preventer as required by local codes.

DRAIN (1/2" NPT)

CAUTION The drain from the generator should not share an under sink trap, unless the generator is mounted higher than the sink to prevent damage to the generator if the drain backs up.

NOTICE A drain valve is provided to facilitate servicing. Provide a drain line connection from steambath generator drain valve according to National and local Codes. Check local plumbing code for receptor, trap and vent requirements. **DO NOT** connect Drain line and Safety Valve line together. Unit drains by gravity.

NOTICE **DO NOT** plumb the generator drain and drip pan drain together in such a way that will cause drain water to back into drip pan. **DO NOT** drain into a steam enclosure or any location where accidental contact with drain water may occur. In the event of a power failure the AutoFlush System valve will open and may discharge boiling water causing a scalding hazard.

WARNING

DO NOT connect the drain valve to the steam piping.

AROMASTEAM

If the optional AromaSteam Electronic Oil Delivery System (PN: MS AROMA) is to be installed, a 90 degree T plumbing fitting must be installed at a designated location on the steam piping. See the MrSteam AromaSteam Operation and Instruction Manual for installation information before the steam piping is installed at the technical downloads section of www.mrsteam.com

STEAM PIPING (3/4"NPT)

1. **DO NOT** install any valve in steam piping. Flow of steam must be unobstructed.
2. Use 3/4-inch brass pipe or copper tubing from unit to steam head as permitted by codes.
3. Insulate steam piping with fiberglass pipe insulation or similar insulation rated 212° F or higher.
4. Pitch steam piping1/4" per foot towards steam head or steam generator to avoid valleys and trapping of condensate.

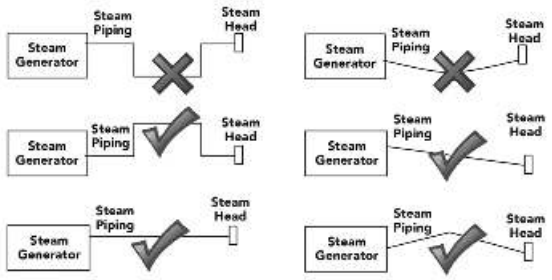

WARNING Failure to pitch the steam piping as required for condensate to drain, may cause condensate to block the flow of steam. Blocking the steam flow may cause steam pressure to discharge boiling water through the steamhead, resulting in a scalding hazard. Blocking the flow of steam may cause steam to discharge through the safety valve, resulting in a scalding hazard.

NOTICE To reduce noise 45° elbows are preferred over 90° elbows.

NOTICE A 1.5" hole in the steam room is required to mount the steamhead. For Linear steamhead, please refer to the installation instructions.

SAFETY VALVE (3/4" NPT)

Where permitted by local codes, provide an outlet plumbing connection for safety valve.

WARNING To insure proper and automatic safety valve operation: **DO NOT** connect a shut off valve or a plug at safety valve outlet. **DO NOT** connect a shut off valve or any obstruction in steam supply pipe. **DO NOT** connect the safety-valve output into the steam piping.

DRIP PAN

MrSteam strongly recommends the use of a drip pan in the unlikely event of a plumbing leak. Check local plumbing codes for receptor, trap and vent requirements. Drip pans drain by gravity. The drip pan is equipped with an integral 3/4" fitting. See page 17 for additional drip pan installation information.

NOTICE Do not plumb the generator drain and drip pan drain together in such a way that will cause drain water to back into drip pan.

INSTALLING THE ROUND OR SQUARE AROMASTEAM STEAMHEAD (3/4" NPT)

NOTICE A 1 1/2" clearance hole around the steam pipe is needed to mount the steamhead.

STEP 1
Locate steam head 6-12 inches above floor, except for:
1. Tub/shower enclosures, install 6 inches above tub top edge.
2. For enclosures with acrylic or other non-heat resistant flooring install Acrylic Shield Part Number 103938.
3. To prevent door seals from deteriorating do not locate the steam head where direct steam emission would contact door seals.
4. To reduce noise, do not locate steamhead within 12" from a wall.

STEP 2
Install steamhead with the oil well facing up as shown. Hand tightening is sufficient when teflon or equal pipe thread sealing compound is used.

STEP 3
Secure a bronze drop ear fitting to a header and run 3/4" copper steam piping from the steam generator to the drop ear fitting. Install a temporary nipple (6" or longer) in the drop ear fitting to locate the steamhead after the wall is finished.

STEP 4
After the wall has been finished, mark on the nipple where the surface of the wall is. Remove the nipple and measure the portion that was in the wall (the end to your mark). Subtract 1/4" from that dimension and select a brass nipple of that length to finish the installation.

STEP 5
Wrap teflon tape around the threads of the new nipple and screw the nipple into the steamhead. **DO NOT** use wrenches or tools which would damage the steamhead's finish. Wrap teflon tape around the threads of the nipple and screw the nipple and steamhead assembly you just made into the drop ear fitting in the wall. The steamhead should be flush with the wall and the well must be facing up.

IMPORTANT NOTE: DO NOT disassemble steamhead. MrSteam's steamhead is shipped fully assembled and requires no additional assembly. To preserve steam head finish, **DO NOT** use wrench or other tools to tighten. **DO NOT** use abrasive cleansers or chemicals. Use only water with mild soap and a non-abrasive sponge.

CAUTION Because the steam head and direct steam emissions are very hot, locate the steam head where incidental contact by bather with the steam head or direct steam emission cannot occur.

Consult with supplier of acrylic, fiberglass and other non-heat resistant enclosures for recommended steamhead location. Use Acrylic Shield PN 103938 (round) or PN 103938SQ (square). See instructions provided with steam shield.

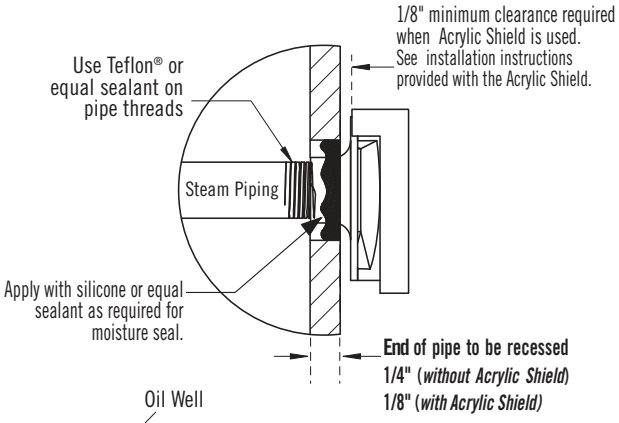

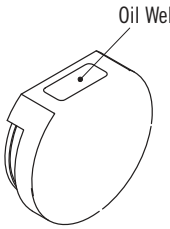

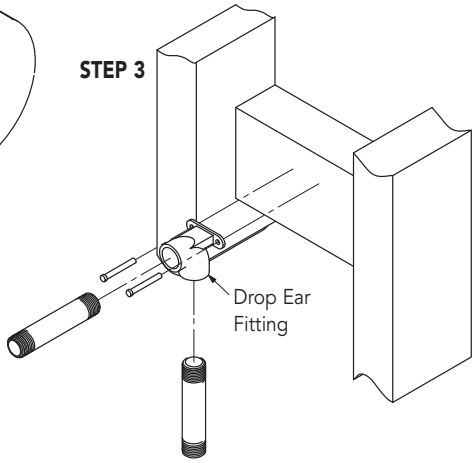

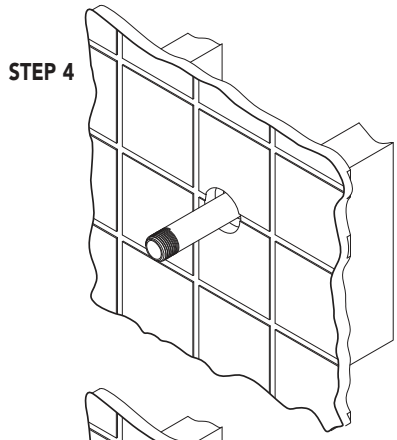

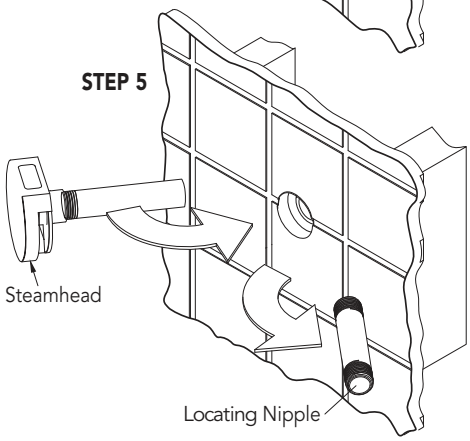

All drawing are for illustrative purposes only

GENERATOR DIAGRAM

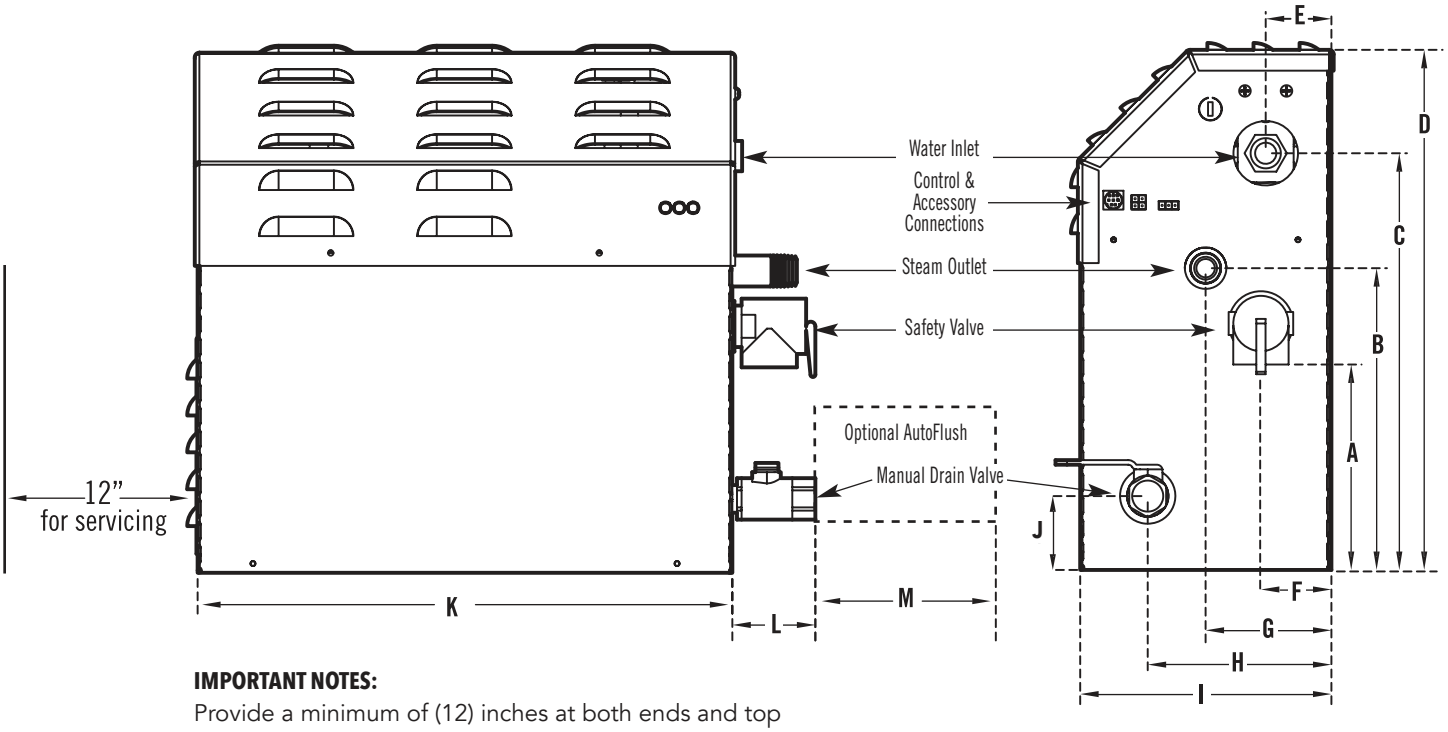

IMPORTANT NOTES:
Provide a minimum of (12) inches at both ends and top of the steam generator or as required for servicing. Alternately, provide unions as required to facilitate installation and disconnection of the steam generator.

The minimum clearance from combustible surfaces is zero all around.

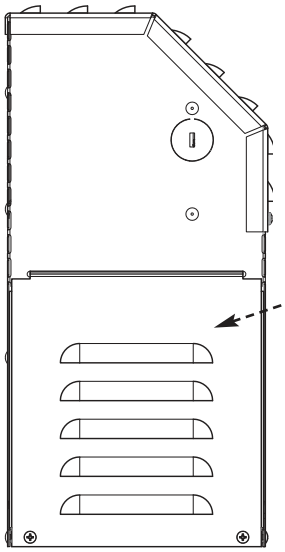

TO AVOID EQUIPMENT DAMAGE DO NOT CONNECT POWER SUPPLY DIRECTLY TO ELEMENTS !!!

	MS90R - 400R		MSSUPER1R - 3R	
A	5	(127)	7¼	(184)
B	8⅛	(206)	9⅞	(251)
C	11¼	(392)	15½	(394)
D	14¼	(392)	18¾	(476)
E	1⅞	(48)	1¼	(32)
F	2	(51)	2¼	(57)
G	5⅞	(149)	6	(152)
H	5	(127)	4⅞	(124)
I	6⅞	(175)	7⅞	(200)
J	2	(51)	2	(51)
K	14½	(368)	17	(432)
L	2½	(64)	2½	(64)
M	6⅜	(162)	6⅜	(162)

NOTICE

1. M = Optional AutoFlush
2. All units in inches (MM)

WATER INLET	3/8" NPT
STEAM OUTLET	3/4" NPT
SAFETY VALVE	3/4" NPT
MANUAL DRAIN VALVE	1/2" NPT
AUTOFLUSH VALVE	1/2" NPT

All drawing are for illustrative purposes only

ELECTRICAL

WARNING All electrical wiring to be installed by a qualified licensed electrician in accordance with National Electrical Code and local electrical code.

POWER WIRING

See "Field Power Wiring" Diagrams (below)

1. Check power voltage. Use 240V rated unit when supply is greater than 208V. (Most homes have 240V, 1PH service). Use 208V rated unit for 208V power.
2. Use minimum 90° C/300V rated insulated copper conductors only, sized in accordance with National Electrical Code and local electrical code for the current in Ampere Chart. If allowed by codes, NM cable may require a larger wire size than as listed on the chart.
3. Connect suitably sized equipment grounding wire to ground terminal provided.
4. Install a separate circuit breaker between supply and unit. Provide a power supply disconnect within sight of the steam generator or one that is capable of being locked in the open position.
5. For single phase units, use two-wire supply source and equipment grounding wire. Neutral (white) wire is not required.

WARNING

PROVIDE A POWER SUPPLY DISCONNECT WITHIN SIGHT OF THE STEAM GENERATOR OR ONE THAT IS CAPABLE OF BEING LOCKED IN THE OPEN POSITION AS REQUIRED BY CODE.

ELECTRICAL CHART

Model No	Vol (Cu. Ft.)	Max Room KW	Volts†	Phase	Amps	Wire Size (AWG) for 40°C Ambient	Wire Size (AWG) for 45°C Ambient
MS90R	71	5.0	208	1	24	10	8
				3	14	12	12
			240	1	21	10	10
				3	12	12	12
MS150R	107	6.0	208	1	29	8	8
				3	17	10	10
			240	1	25	8	8
				3	14	12	12
MS225R	161	7.5	208	1	36	8	8
				3	21	10	10
			240	1	32	8	8
				3	18	10	10
MS400R	257	9.0	208	1	44	8	6
				3	25	8	8
			240	1	38	8	8
				3	22	10	10
MSSuper 1R	339	10.0	208	1	49	6	6
				3	28	8	8
			240	1	42	8	6
				3	24	8	8
MSSuper 2R	411	12.0	208	1	58	6	4
				3	34	8	8
			240	1	50	6	6
				3	29	8	8
MSSuper 3R	482	15.0	208	1	73	4	3
				3	42	8	6
			240	1	63	4	4
				3	36	8	8

** See page 3 for room sizing.*

† All specifications shown are for 208V and 240V Consult factory for other voltage specifications.

FIELD POWER WIRING

1. **TO AVOID EQUIPMENT DAMAGE DO NOT CONNECT POWER SUPPLY DIRECTLY TO ELEMENTS!!!**
2. L1, L2, Ground to be field wired
3. Super 1R 240/1 models are not supplied with internal fusing.
4. All Drawings are for illustrative purposes only. Consult with qualified licensed electrician for electrical installation.

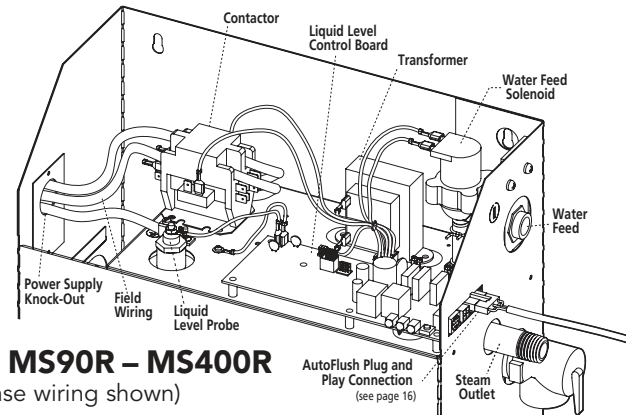

Models MS90R – MS400R
(single phase wiring shown)

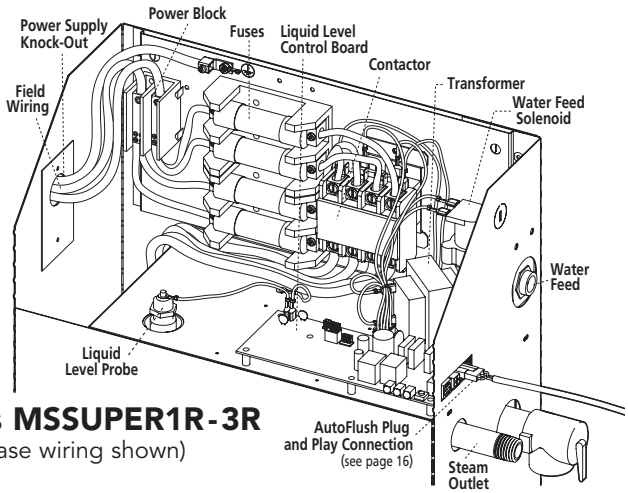

Models MSSUPER1R-3R
(single phase wiring shown)

All drawing are for illustrative purposes only

SINGLE PHASE 208/240 VOLT WIRING DIAGRAMS

MODELS MS90R, MS150R, MS225R, MS400R

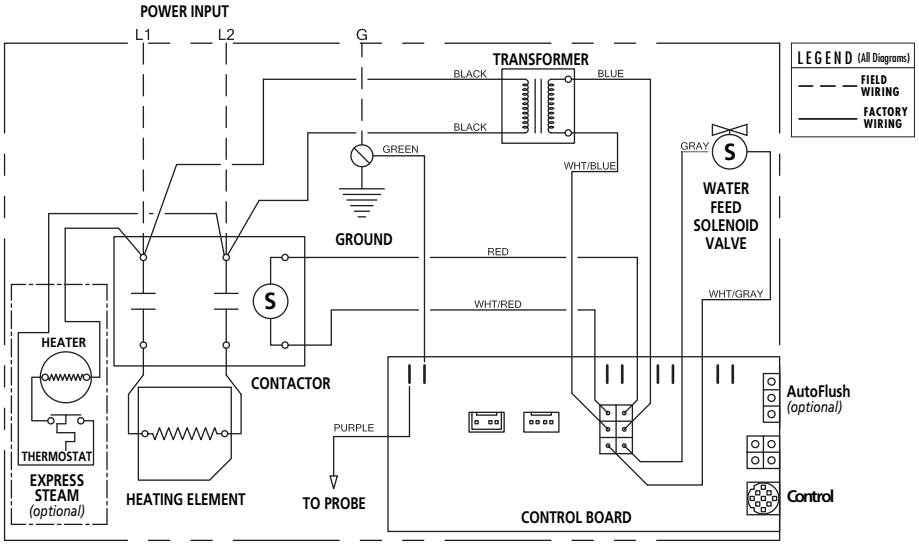

MODELS MSSUPER1R, MSSUPER2R, MSSUPER3R
(Note: Super1R 240V does not have fuses)

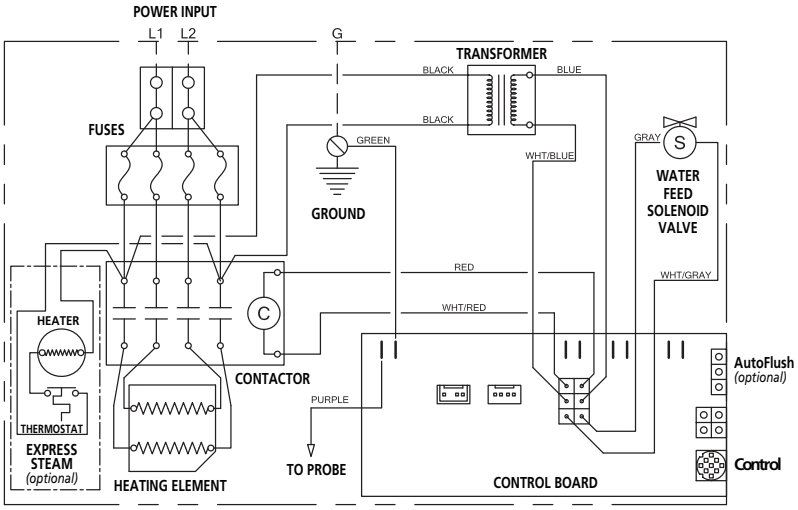

THREE PHASE 208/240 VOLT WIRING DIAGRAM

MODELS MS90R, MS150R, MS225R, MS400R, MSSUPER1R, MSSUPER2R, MSSUPER3R

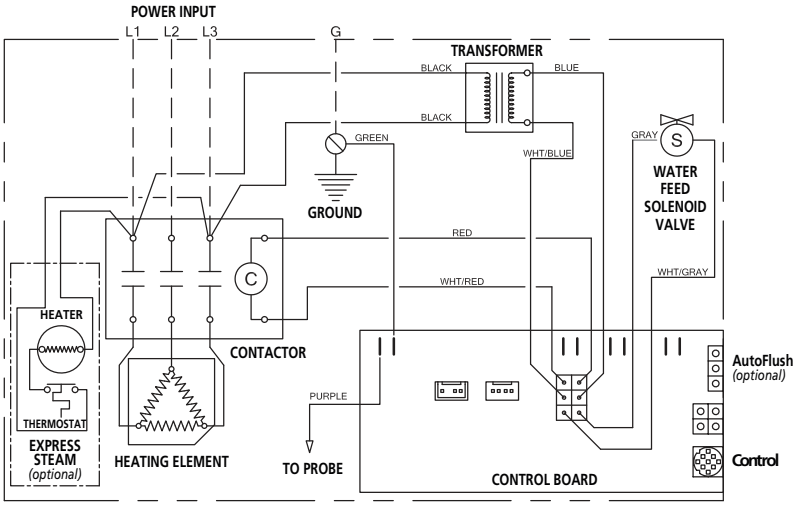

All drawing are for illustrative purposes only

MULTI-INSTALLATION INSTRUCTIONS

1. Install each unit as in a single installation. Install the two generators as close to each other as possible.

2. ⚠ **WARNING** Shock Hazard. Power must be disconnected at the main electrical supply before removing steam generator covers.

3. Connect the TempoTouch®, TempoFlex®, iSteam®, AirTempo®, iTempo or iTempo/Plus® control to either generator per the control instructions.

NOTICE The control must be connected to the primary unit.

4. Insert the ends of interconnecting cable provided (PN 103904) through the knock-outs as shown in the Diagram on page 7. Connect each end to the printed circuit board as shown.

5. Connect separate plumbing and power supplies for each unit.

Wiring Diagram

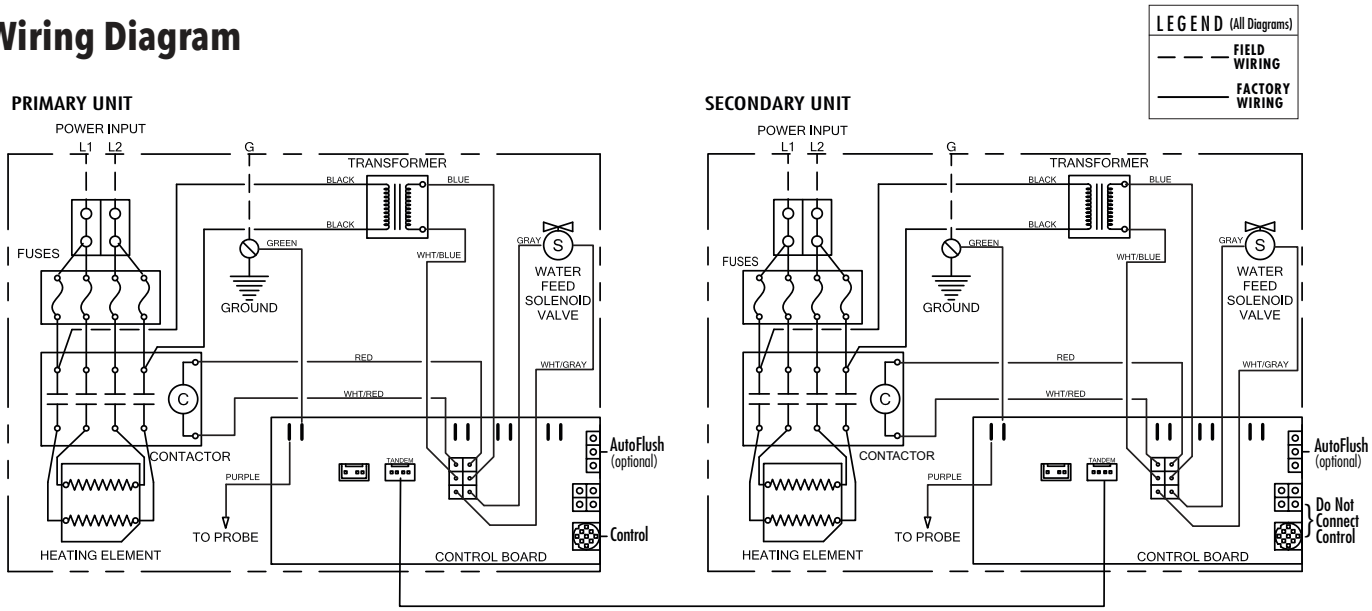

OPTIONAL TANDEM CABLE

For connecting more than 2 steam generators in tandem

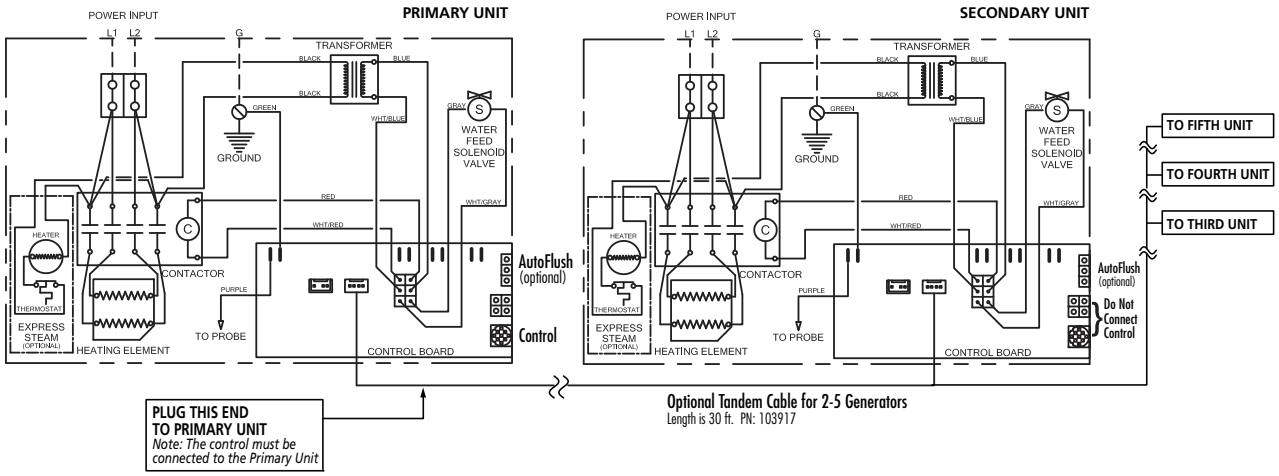

All drawing are for illustrative purposes only

INITIAL START-UP & CHECKOUT

1. Turn on control. Follow specific instructions provided with controls.
2. Steam will begin to appear in approximately 5 minutes (unless equipped with factory-installed Express Steam option) at the steam head. Steam will shut off when desired temperature is reached and will automatically resume when room temperature drops below set point.
3. Steam will shut off automatically when control counts down to zero. To shut steam off manually, turn control OFF. To clear steam from enclosure area, turn shower on before opening door.
4. If unit does not start and control does not turn ON (control display does not light up) then turn breaker off for 20 seconds and try again.
5. Check all internal and external plumbing fittings for leaks while the steam is on.

OPTIONAL & ACCESSORY EQUIPMENT

Refer to specific instruction manual for installation, operation and maintenance of optional equipment and accessories such as TempoTouch®, TempoFlex®, iSteam®, AirTempo®, iTempo/Plus® and MSTS.

TROUBLESHOOTING

WARNING All electrical troubleshooting to be performed by a qualified licensed electrician

IMPORTANT NOTE: The model and serial number is printed on the data plate on the front of the steam bath generator.

Step 1 Check main incoming power to the unit.

Step 2 Verify power on secondary side of all fuses.(Model MSSUPER1R-3R only)

Step 3 Ensure the black wires from the primary side of the transformer are connected to the quick connect tabs on the line side of the contactor.

Step 4 Verify that you have 24VAC coming out of the transformer, WHT & WHT/BLU wires, into the board.

Step 5 Verify that you have the green light on the PC board.

Step 6 Push the white test button to run the generator for 10 minute test cycle. Make sure the steam room is empty.

Step 7 Verify that you have 24 VAC to the water feed solenoid, GRY & WHT/GRY wires (will fill when needed).

Step 8 Temporarily short out the WLS (Purple wire) and GND (Green wire) terminals and verify the contactor engages.

Step 9 When the red light is on, verify 24 VAC, RED & WHT/RED wires, to the contactor.

Step 10 Check main voltage on the load side of the contactor when it is engaged.

Step 11 If all steps on the power path were verified, turn off power to the unit and pull the heating element via the left hand access panel for inspection.

DO NOT disassemble internal components, internal components contain no serviceable parts.

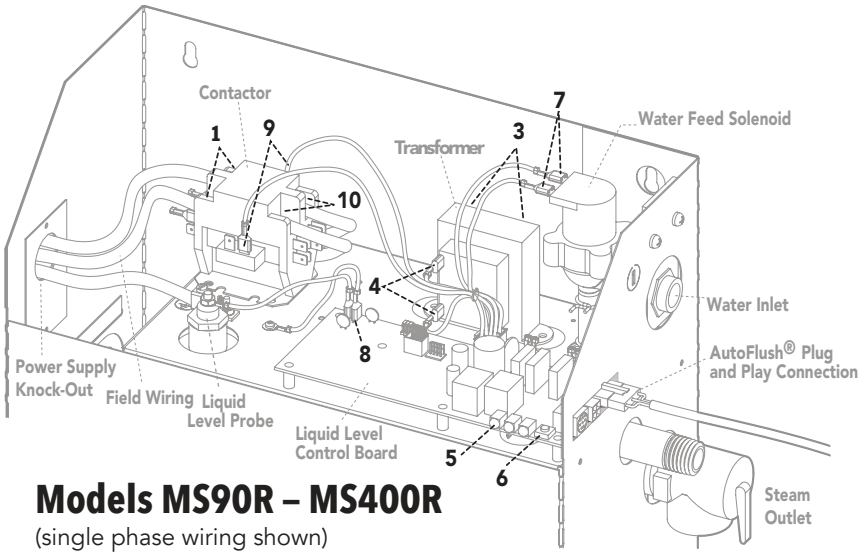

Models MS90R – MS400R
(single phase wiring shown)

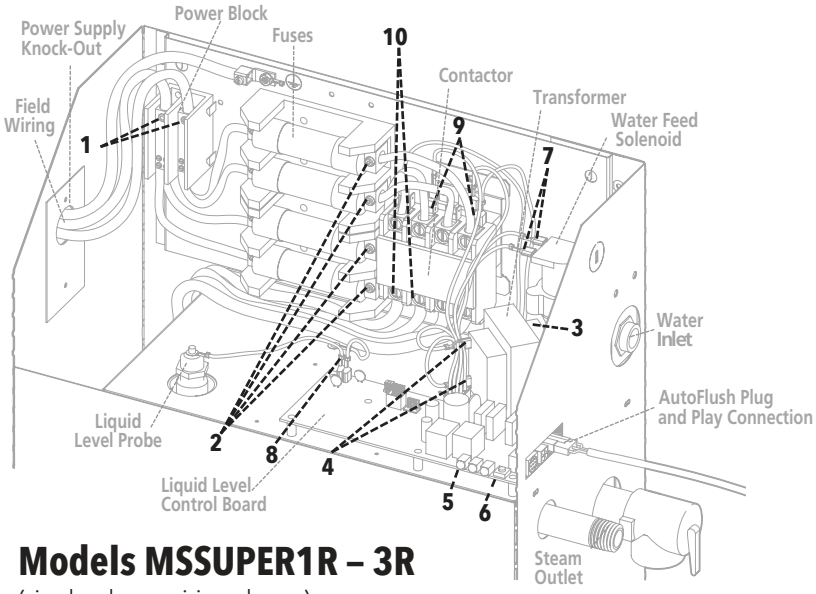

Models MSSUPER1R – 3R
(single phase wiring shown)

All drawing are for illustrative purposes only

SYSTEM STATUS CODES

The control (iTempo/Plus®) may display a status code if the steam generator is not functioning properly.

Code	Code Meaning	Probable Cause	Suggested Remedy
H20	Water level is not satisfied within 6 min.	Water Supply is off	Turn on Water Supply
		Defective water feed solenoid Water	Check/replace water solenoid valve
		feed probe not functioning	Check/clean probe. Check probe wiring.
		Drain Valve Open AutoFlush not functioning	Check/Close drain valve Check/Replace AutoFlush
Prr1 or Prr2	Temperature Probe Error	Control cable/MSTS cable cut Internal problem with control/MSTS	Replace control cable / MSTS Replace control / MSTS
Err1	Incorrect Field Supply Voltage (green light on liquid level control board will be oft)	Incorrect voltage supplied to Generator	Supply steam generator with the correct voltage noted on the data plate label.
Err2	Button on control is pressed for more than 5 minutes	Control cover misalignment	Remove and reinstall control cover
		Debris behind control cover	Remove control cover and clean cover, control and keypad with a damp cloth
Err7	Liquid Level Control Board malfunction	Memory error in LLCB	Press ON/OFF to clear. Replace control if code remains.

LIQUID LEVEL CONTROL BOARD Explanation of LED Indicators

GREEN	LED is ON when there is 208/240 Volt incoming power connected, 24 Volt transformer secondary output and on-board 5 Volt DC control power are present.
YELLOW	Water level indicator-LED is OFF when no water is detected (for more that 5 seconds). ON when water level is satisfactory. For units with AutoFlush, if more than five hours have elapsed since last usage and this LED is ON it is indicative of an AutoFlush or water level probe circuit malfunction.
RED	Contactor relay indicator-LED is ON when relay is closed and sending 24 Volts to the contactor coil. (This LED comes ON if the generator is ON.)
FORCE ON BUTTON	Press this button to operate the generator. This button is for trouble shooting only and will operate TEST if a control is connected or not. Pressing the button again will shut the generator OFF. The test button will only allow the generator to operate for 10 minutes.

Liquid Level Control Board
PN 104724
(shown without wiring)

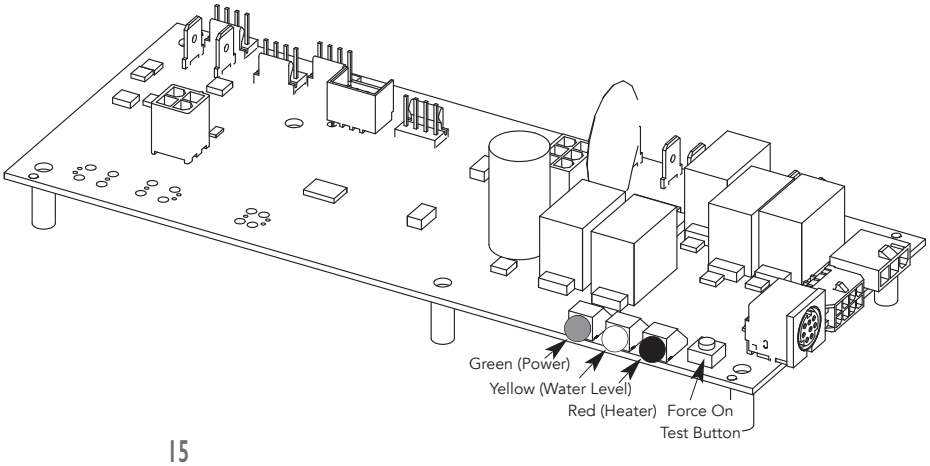

All drawing are for illustrative purposes only

OPTIONAL AUTOFLUSH®

Box Contents
AutoFlush Valve with Cord
Installation Instructions

OPERATION
The optional AutoFlush System feature automatically drains the MrSteam generator following each use. A time delay allows the water to cool down (about two hours) before it drains by gravity for a safe and gentle operation.

NOTICE If the Express Steam® option has been installed, the AutoFlush will drain for ten minutes then refill with fresh water to begin the pre-heat cycle.

INSTALLATION INSTRUCTIONS

1. Plumbing to be performed by a qualified plumber and shall be in accordance with applicable national and local codes. Unit drains by gravity. A drain line that is lower than the AutoFlush® assembly must be available. The AutoFlush System valve outlet is 1/2" NPT. Check plumbing code for receptor, trap and vent requirements.

2. Use copper or brass nipple 1/2" NPT x 31/2" or longer (not supplied) to connect AutoFlush valve to the Drain Valve (follow arrow on AutoFlush valve for flow direction, arrow should point away from generator's drain valve).

WARNING **DO NOT REMOVE THE DRAIN VALVE** Removal may cause equipment and property damage. If there is not enough room for the valve, an elbow and a short nipple (not provided) can be added.

3. Open Drain Valve (handle must be aligned with brass nipple).

4. Connect the AutoFlush System cord connector to the three pin connector as shown.

5. The AutoFlush valve must be installed within the orientation range shown.**DO NOT** drain into a steam enclosure or any location where accidental contact with drain water may occur. In the event of a power failure the AutoFlush System valve will open and may discharge boiling water causing a scalding hazard.

SWEAT FITTINGS
When using sweat fittings use only tin base solder with a melting point below 600 degrees F. **DO NOT** overheat. Ends of water supply tubing must be thoroughly clean for a minimum distance of 1" from ends. **DO NOT** remove valve cover.

TO CHECK OPERATION
1. Turn on MrSteam and allow tank to fill with water.
2. Turn off MrSteam control. Water should stay in tank.
3. Turn off power at the panel box. Water should discharge from tank.
4. Turn on power at panel box.
5. Repeat

CAUTION
PROVIDE DRAIN PLUMBING ACCORDING TO LOCAL CODES. PLUMB AS REQUIRED FOR AUTOFLUSH SYSTEM.

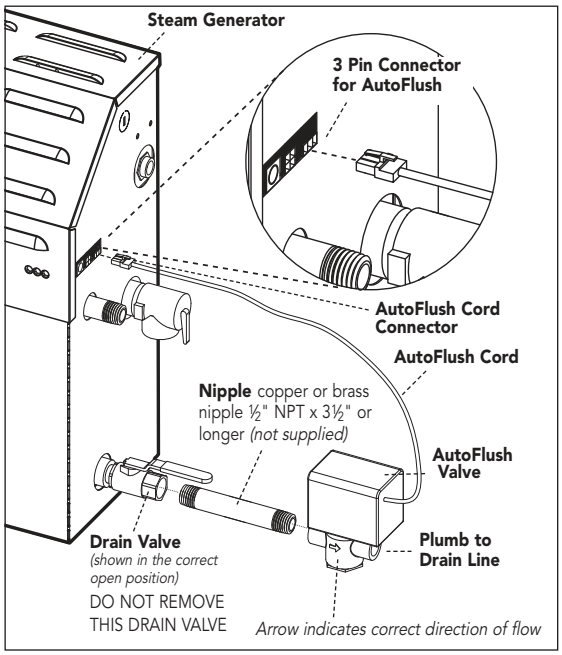

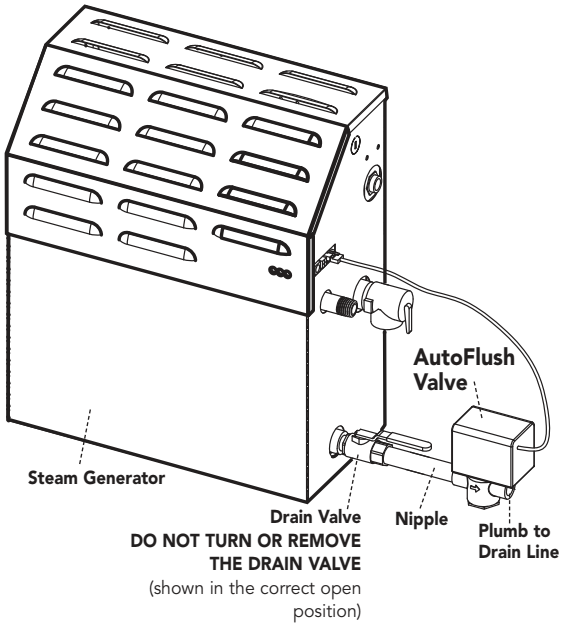

AutoFlush Shown Fully Assembled

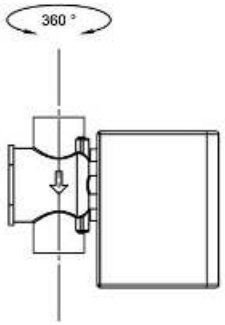

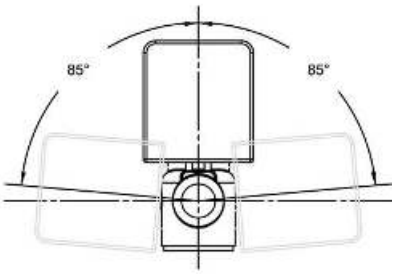

All drawing are for illustrative purposes only

OPTIONAL DRIP PAN

MrSteam strongly recommends the use of a drip pan in the unlikely event of a plumbing leak.

Locate the drip pan on a solid level surface and place the steam generator inside the drip pan. Insure the steam generator is level (see page 5 for locating the steam generator).

All plumbing shall be performed by a qualified licensed plumber and in accordance with applicable national and local codes. Check local plumbing code for receptor, trap and vent requirements. Drip pans drain by gravity.

The drip pan is equipped with an integral female 3⁄4" NPT fitting.

NOTICE Do not plumb the generator drain and drip pan drain together in such a way that will cause drain water to back into drip pan.

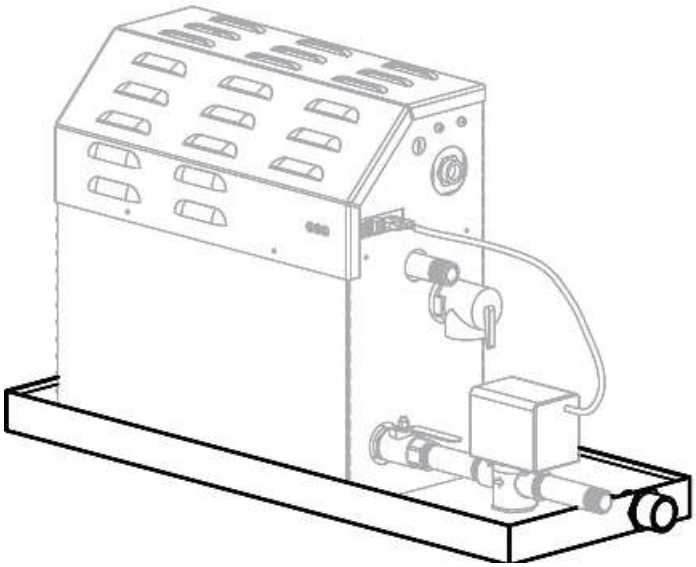

OPTIONAL EXPRESS STEAM®

(only available factory installed)

Available for all MS Models. Express Steam generators are equipped with a low power heating element and thermostat to keep the water in the tank warm enough to bring up steam quicker. All Express Steam components and wiring are installed at the factory. No additional wiring or plumbing is required by installers.

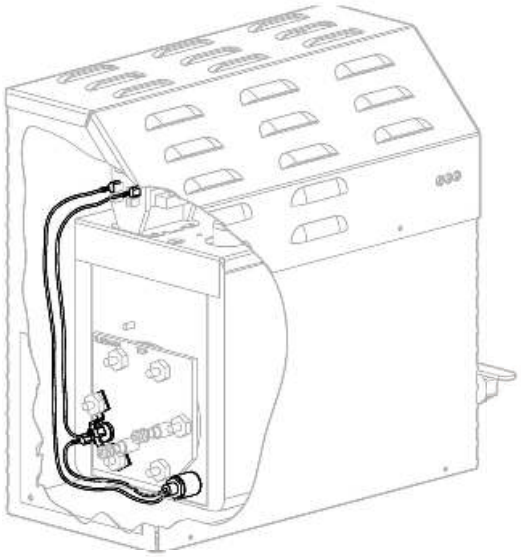

All drawing are for illustrative purposes only

PARTS IDENTIFICATION DIAGRAMS

MS REGULAR MODELS: MS90R - MS400R

(with AutoFlush®)
shown with cover removed

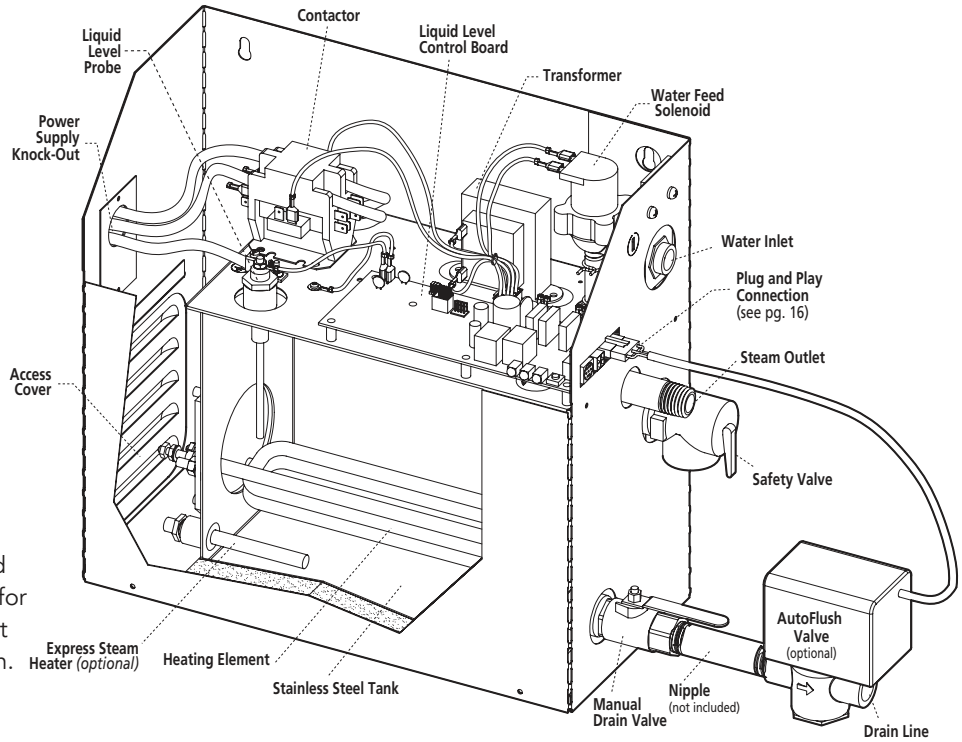

NOTICE

FOR ILLUSTRATIVE PURPOSES ONLY.
Some components may be omitted or altered for clarity. **DO NOT** use for wiring, repair or other purposes not related to component identification.

MS SUPER MODELS: MSSUPE1R - MSSUPER3R

(with AutoFlush®)
shown with cover removed

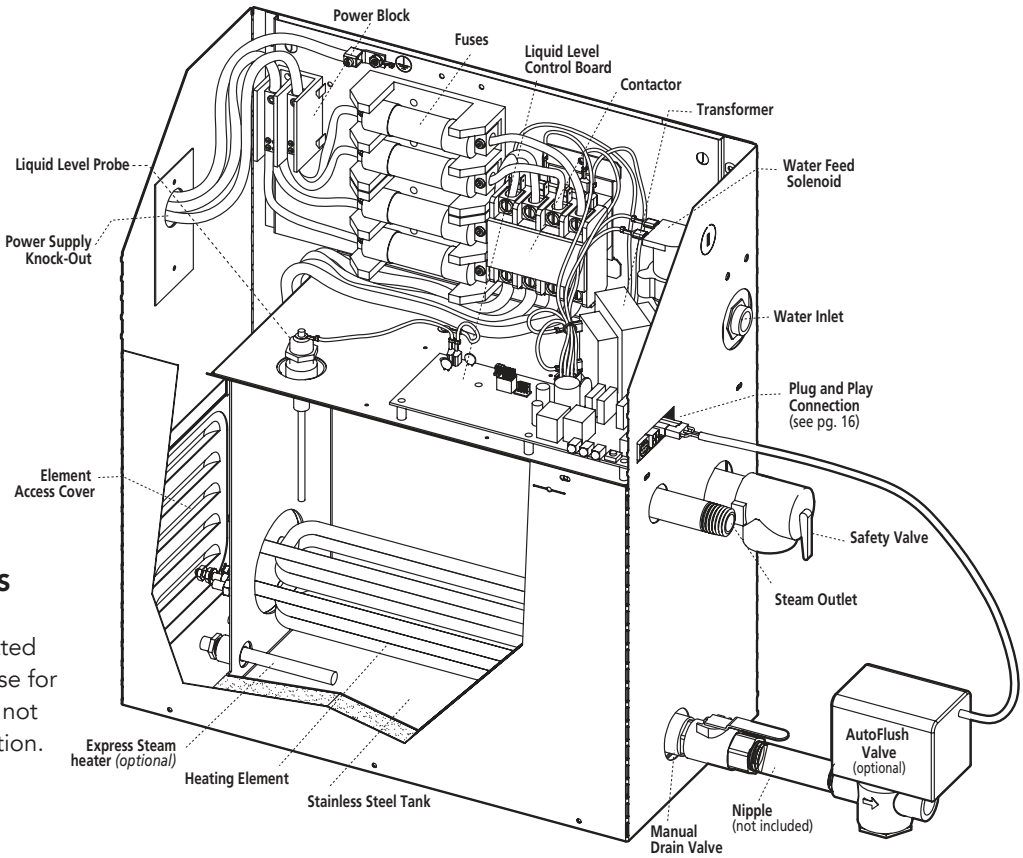

NOTICE

Super1R 240/1 models are not supplied with internal fusing.

NOTICE

FOR ILLUSTRATIVE PURPOSES ONLY.
Some components may be omitted or altered for clarity. **DO NOT** use for wiring, repair or other purposes not related to component identification.

All drawing are for illustrative purposes only

REPLACEMENT PARTS LIST

Part No.	Description	Generator
99178MS	Drain Valve	All Models
99297	Safety Valve 15PSI	All Models
100479	Water Feed Solenoid Valve w/filter	All Models
10477-3	Transformer 24VAC	All Models
104724	Liquid Level Control Board	All Models
103904	Tandem Cable for 2 generators (12 ft.)	All Models
103917	Tandem Cable for up to 5 generators (30 ft.)	All Models
104117-30	Cable for iSteam®, AirTempo® & iTempo/Plus® (30 ft.)	All Models
104678-60	60ft Control Cable	All Models
MSTS	Remote Temperature Probe (integral 30ft cable)	All Models
MSTS-60	Remote Temperature Probe (integral 60ft cable)	All Models
100476-2	Contactor 50A 2-pole	MS90R-400R, Single phase
99012	Contactor 50A 3-pole	All 3-Phase Models
103453	Contactor 50A 4-pole	MSSuper1R–3R
100471-2	Probe Assembly	All Models
99096MS	Heating Element Gasket	All Models
103938RD	Acrylic Shield for Round Steamhead	All Models
103938SQ	Acrylic Shield for Square Steamhead	All Models
99314	Power Fuse 60A 250V	MSSuper2R–3R
29051BMS	Heating Element 5 KW 208V Single Phase	MS90R
29051CMS	Heating Element 5 KW 240V Single Phase	MS90R
29061BMS	Heating Element 6 KW 208V Single Phase	MS150R
29061CMS	Heating Element 6 KW 240V Single Phase	MS150R
29071BMS	Heating Element 7.5 KW 208V Single Phase	MS225R
29071CMS	Heating Element 7.5 KW 240V Single Phase	MS225R
29091BMS	Heating Element 9 KW 208V Single Phase	MS400R
29091CMS	Heating Element 9 KW 240V Single Phase	MS400R
29101BMS	Heating Element 10 KW 208V Single Phase	MSSUPER1R
29101CMS	Heating Element 10 KW 240V Single Phase	MSSUPER1R
29121BMS	Heating Element 12 KW 208V Single Phase	MSSUPER2R
29121CMS	Heating Element 12 KW 240V Single Phase	MSSUPER2R
29151BMS	Heating Element 15 KW 208V Single Phase	MSSUPER3R
29151CMS	Heating Element 15 KW 240V Single Phase	MSSUPER3R

For other voltages and phases contact MrSteam

CONTROL INSTALLATION

Refer to Control Manual for specific installation requirements

BEFORE INSTALLING

Turn power to the steam generator **OFF** before connecting the control to the generator. Failure to turn the power off will result in an inoperable control.

⚠CAUTION To avoid unintentional steambath operation, **DO NOT** locate the control where other controls, accessories, shower heads, valves, body sprays or similar within the shower could cause confusion or interfere with the MrSteam control's intended use and function.

⚠CAUTION **DO NOT** use any TempoTouch®, TempoFlex®, iSteam®, AirTempo®, iTempo/Plus® or iTempo controls without reading and understanding its own manual and the MrSteam steam generator Installation and Operation Manual. Failure to read and understand these instructions may result in an inoperative or hazardous installation.

⚠WARNING A peel and stick warning sticker must be read and permanently affixed in a conspicuous location near the steam room. Failure to read and affix this warning sticker in a conspicuous location may result in serious injury or death. .

Install the TempoTouch®, TempoFlex®, AirTempo®, iTempo® or iTempo/Plu®s controls according to installation instructions. Failure to install according to instructions will result in an inoperative control or hazardous overheating or inadequate heating of the steam room.

If an TempoTouch®, TempoFlex®, iSteam®, AirTempo®, iTempo® or iTempo/Plus® control is installed outside the steam room a Remote Temperature Probe (PN MSTS) must be installed inside the steam room per installation instructions supplied with the Remote Temperature Probe. Failure to install according to instructions will result in an inoperative control and overheating of the steam room.

⚠WARNING **DO NOT** route TempoTouch®, TempoFlex®, iSteam®, AirTempo®, iTempo/Plus® or iTempo control wiring inside conduit together with power lines or close to hot water or steam piping. Doing so may result in an inoperative or hazardous installation.

DO NOT alter or modify any MrSteam product. Doing so may result in an inoperative or hazardous installation and will void the UL listing and warranty.

IMPORTANT NOTES:

1. Turn power to the steam generator **OFF** before connect-ing the control to the generator. Failure to turn the power off will result in an inoperable control.
2. **DO NOT** operate TempoTouch®, TempoFlex®, iSteam®, AirTempo®, iTempo/Plus®or iTempo controls with other than a MrSteam TempoTouch®, TempoFlex®, iSteam®, AirTempo®, or iTempo® compatible steam generator. MrSteam residential steam generators with serial numbers lower than 900000, or any other brand of steam generator are not to be operated with iTempo® controls. Doing so may result in an inoperative or hazardous installation. If iSteam® is used with a generator having serial number less than 1174000, contact MrSteam technical support for an upgraded PC board.
3. This document contains important safety, operation and maintenance information. Leave this document with the homeowner. **DO NOT** discard this document.
4. Discontinue use of the steam generator or control if the steam generator is damaged or otherwise not functioning properly. Operating a damaged steam generator may result in an inoperative or hazardous installation

CONTROL ROUGH IN

Refer to Installation Instructions for the specific control

IMPORTANT NOTE: The control cable should be run in a dedicated 1" conduit to facilitate installation and service.

1. Determine the desired installation location of the control. The TempoTouch®, TempoFlex®, iSteam®, AirTempo®, iTempo® and iTempo/Plus® controls are designed to be installed inside or outside the steam room as a matter of personal preference. If the control is installed inside the steam room the control must be located:
2. 4 - 5 feet above the floor near the bather seating area

⚠CAUTION

3. The control features an integral temperature sensor. Locate the control in a location representative of the desired steam bathing temperatures. **DO NOT** locate the control above or near the steam head or direct steam emissions.
4. **On a vertical wall**
   The iSteam® and iTempo® control cable length is 30 feet. Insure that the control and/or steam generator are located accordingly. An optional 60 foot cable is available, PN 104678-60 for iSteam®. Contact a MrSteam technical service representative if a 60 foot cable is required. Excess control cable should be neatly coiled and twisted into a figure 8. The AirTempo dongle is provided with a 3 foot cable. The maximum cable length is 60 feet.

IMPORTANT NOTES:

- If the control is installed outside the steam room a Remote Temperature Probe Part Number MSTS must be installed inside the steam room, depending on the control.
- Insure MrSteam steam generator is TempoTouch®, TempoFlex®, iSteam®, AirTempo® or iTempo® compatible and has a serial number 900000 or high-er. If iSteam® is used with a generator having serial number less than 1174000, contact MrSteam technical support for an upgraded PC board.
- See instructions for the MSTS Temperature Probe (located in the Control Installation Manual related to your specific control package) before rough-in or installation of control.

HOMEOWNER SECTION

READ ME FIRST!

WARNING As you follow these instructions, you will notice warning and caution symbols. This blocked information is important for the safe and efficient installation and operation of this generator. These are types of potential hazards that may occur during installation & operation:

WARNING Indicates a potentially hazardous situation, which, if not avoided, could result in death or serious injury.

CAUTION Indicates a potentially hazardous situation, which, if not avoided may result in minor or moderate injury or product damage.

NOTICE is used to address practices not related to physical injury.

IMPORTANTNOTE: This highlights information that is especially relevant to a problem-free installation.

All information in these instructions is based on the latest product information available at the time of publication. MrSteam reserves the right to make changes at any time without notice. More current instructions may be available at www.mrsteam.com.

When installing and using this electrical equipment, basic safety precautions should always be followed, including the following:

IMPORTANT SAFETY INSTRUCTIONS

1. READ AND FOLLOW ALL INSTRUCTIONS

2. **WARNING** Supervise children at all times.

3. **WARNING** Steam is hot and can cause injury or death if improperly used. Steam rooms contain steam and elevated temperatures. Please read and observe all warnings in this manual before installing or using a steam room.

4. **WARNING** To reduce the risk of injury:
A. The wet surfaces of steam enclosures may be slippery. Use care when entering or leaving.
B. The steam head is hot. DO NOT touch the steam head and avoid the steam near the steam head.
C. Prolonged use of the steam system can raise excessively the internal human body temperature and impair the body's ability to regulate its internal temperature (hyperthermia). Limit your use of steam to 10-15 minutes until you are certain of your body's reaction.
D. Excessive temperatures have a high potential for causing fetal damage during the early months of pregnancy. Pregnancy or possibly pregnant women should consult a physician regarding correct exposure.
E. Obese persons and persons with a history of heart disease, low or high blood pressure, circulatory system problems, or diabetes should consult a physician before using a steambath.
F. Persons using medication should consult a physician before using a steambath since some medication may induce drowsiness while other medications may affect heart rate, blood pressure and circulation.

SAVE THESE INSTRUCTIONS

HYPERTHERMIA occurs when the internal temperature of the body reaches a level several degrees above the normal body temperature of 98.6° F. The symptoms of hyperthermia include an increase in the internal temperature of the body, dizziness, lethargy, drowsiness, and faint-ing. The effects of hyperthermia include:
a) Failure to perceive heat;
b) Failure to recognize the need to exit the steambath;
c) Unawareness of impending risk;
d) Fetal damage in pregnant women;
e) Physical inability to exit the steambath and
f) Unconsciousness.

WARNING The use of alcohol, drugs, or medication can greatly increase the risk of hyperthermia.

WARNING The peel and stick warning label located in this manual is an essential part of providing a safe environment for steam room users. The peel and stick warning label must be applied to the wall of the shower or steam enclosure, at a point that is visible to all users. Failure to install this sticker may result in serious injury or death.

The location where this owner's manual is kept shall be written in the space provided on the label using permanent ink.

For a replacement warning label contact MrSteam customer service at 1-800-76-STEAM or hello@mrsteam.com

Not actual size

WARNING

REDUCE THE RISK OF OVERHEATING AND SCALDING

1. EXIT IMMEDIATELY IF UNCOMFORTABLE, DIZZY OR SLEEPY. STAYING TOO LONG IN A HEATED AREA IS CAPABLE OF CAUSING OVERHEATING.
2. SUPERVISE CHILDREN AT ALL TIMES.
3. CHECK WITH A DOCTOR BEFORE USE IF PREGNANT, DIABETIC, IN POOR HEALTH OR UNDER MEDICAL CARE.
4. BREATHING HEATED AIR IN CONJUNCTION WITH CONSUMPTION OF ALCOHOL, DRUGS, OR MEDICATION IS CAPABLE OF CAUSING UNCONSCIOUSNESS.
5. DO NOT CONTACT STEAM HEAD OR STEAM AT THE STEAM HEAD.

REDUCE THE RISK OF SLIPPING AND FALL INJURY

1. USE CARE WHEN ENTERING OR EXITING THE STEAM ROOM. FLOOR MAY BE SLIPPERY

NOTE: FOR ADDITIONAL SAFETY CONSIDERATIONS SEE OWNER'S MANUAL
WHICH IS KEPT: _____
THE OWNER'S MANUAL CAN BE FOUND AT WWW.MRSTEAM.COM

USE OF STEAM ROOM IN CONJUNCTION WITH CONSUMPTION OF ALCOHOL CAN BE DANGEROUS AND CAN RESULT IN INJURY THROUGH SLIP AND FALL OR OTHERWISE.

mr.steam 43-20 34th Street , Long Island City, NY 11101 • 1 800 76 STEAM • www.mrsteam.com

PUR100378 5.22

SETTING THE STEAM BATH TEMPERATURE AND DURATION

WARNING Set the steam bathing temperature according to personal preference, however it is highly recommended to begin steam bathing at a low temperature setting to gauge comfort and safety levels. Set duration to a maximum of 10 minutes to gauge comfort and safety levels. This will allow the steam generator to heat up and begin producing steam.

SAFETY AND OPERATING INFORMATION

WARNING **DO NOT** install or use any TempoTouch®, TempoFlex®, iSteam®, AirTempo®, iTempo/Plus® or iTempo controls without reading and understanding the MrSteam steam generator Installation and Operation Manual. Failure to read and understand these instructions may result in an inoperative or hazardous installation.

WARNING The peel and stick warning sticker located in this manual must be read and permanently affixed in a conspicuous location near the steam room. Failure to read and affix this warning sticker in a conspicuous location may result in serious injury or death.

If an TempoTouch®, TempoFlex®,iSteam®, AirTempo®, iTempo® or iTempo/Plus® control is installed outside the steam room a Remote Temperature Probe (PN MSTS) must be installed inside the steam room per-installation instructions supplied with the Remote Temperature Probe. Failure to install according to instructions will result in an inoperative control and overheating of the steam room.

WARNING To prevent slip and fall hazards non-skip strips must be installed on the steam room floor. **DO NOT** alter or modify any MrSteam product. Doing so may result in an inoperative or hazardous installation and will void the UL listing and warranty.

IMPORTANT NOTES: Malfunction due to power spikes, lightning, fire, freezing or flooding is not covered under the warranty.

Discontinue use of the steam generator or control if the steam generator is damaged or otherwise not functioning properly. Doing so may result in an inoperative or hazardous condition.

CARE TIPS FOR ALL CONTROLS AND STEAMHEADS

1. Use only mild soap and water on a soft cloth to clean
the control and steamhead.
2. **DO NOT** use abrasive cleansers.
3. If the decorative cover is damaged on the iTempo or iTempo/Plus call MrSteam technical service for replacement parts.

NOTICE Replacement of the decorative covers requires removal and reinstallation of the control from the mounting
surfaces.

STEAM GENERATOR MAINTENANCE

MrSteam steambath generators require little maintenance. Other than periodic draining, maintenance procedures are minimal. Every 2 months, or more often in “hard” water areas, the manual drain valve should be opened fully flushing out accumulated materials, salts and other particles which are natural byproducts of boiling water.

CAUTION Flush a minimum of two-three hours after the control has been turned off to insure that the water has cooled.

WARNING Draining immediately after a steam cycle may expose PVC and other piping to high temperature water. Check local codes. The unit will refill automatically when the control is activated again. In areas of hard water, a MrSteam AutoFlush® system is recommended for generator longevity.

WARNING Failure to allow the water to cool will expose the equipment and user to scalding water and cause property and personal injury.

IMPORTANT NOTE: The model and serial number is printed on the data plate on the front of the steam bath generator.

USING MrSteam ESSENTIAL OILS

Enjoy AromaSteam essential oils by placing a drop or two into an unheated AromaSteam steamhead as shown in the illustration. Only use MrSteam AromaSteam essential oils in the MrSteam AromaSteam steamhead.

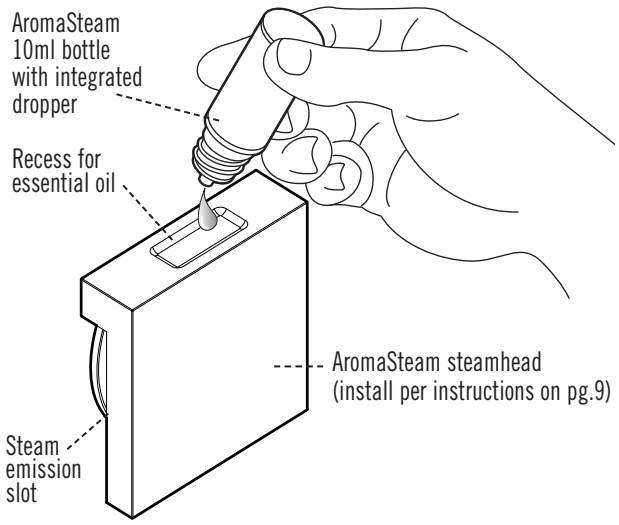

WARNING Essential oils and/or aroma therapy can cause inflammation, burns, headache, nausea and allergic reactions. Consult a physician before using aromatherapy.

CAUTION (Items 1-4)

1. Use essential oils with caution. Essential oils are for external use only. Keep out of reach of children. Essential oils are highly concentrated and are potent substances and should not be applied directly to the skin as they can be irritants. Use essential oils with caution.
2. Place the drops into the MrSteam AromaSteam steamhead recess prior to turning on the steambath. **DO NOT** place drops in a hot steam head as serous injury can result if you do not follow this warning.
3. Start with one drop to gauge strength and suitability. Limit to a maximum of a few drops for a steam bathing session.
4. The bather should exit the steambath **IMMEDIATELY** if dizziness occurs. If skin irritation occurs stop using the oils immediately. Remove any excess oil by washing in mild soap and water. If ingested, rinse mouth with water. Administer water or milk to dilute. Contact a physician immediately.

CAUTION Aromatic oils should be added to steamhead before turning on the steambath unit. **DO NOT** add oil during steam bathing or when the steam head is heated.

Tightly close bottles when storing oils.
Keep bottles away from sources of ignition.

WARRANTY

To view or download the MrSteam Residential Generator Warranty and register your Product go to: **blog.mrsteam.com/wr**

All drawing are for illustrative purposes only

NOTES

NOTES

mr.steam®

Feel Good Inc.®

www.mrsteam.com

Products, information and specifications are subject to change without notice.

Please call Sales & Support at 1.800.76.STEAM (East Coast) or 1.800.72.STEAM (West Coast) for more information.

mr.steam® hello@mrsteam.com | www.mrsteam.com

43-20 34th Street, Long Island City, NY 11101 1 800 76 STEAM | 9410 S. La Cienega Blvd. Inglewood CA 90301 1 800 72 STEAM

2025 © MrSteam and des., A Lifetime of Pleasure, AirTempo, AromaFlo, AudioWizard, AutoFlush, AutoSteam, Butler Package, ChromaSteam, Clean Steam...Every Time, Club Therapy, CT Day Spa, Digital 1, Express Steam, Feel Good Inc., From Bathroom to Spa, iButler, iGenie, iSpa Package, iSteam, iTempo, iTempo/Plus, TempoTouch, TempoFlex, Linear Steamhead, Making Wellness a Way of Life, Music Therapy, My Steam, SmartSizing, Spa Package, Steam Genie, Steam on Demand, Steam in a Box, Steam@Home, SteamStart, SteamTherapy, Tala, Tala Bath & Body, Tempo, The Intelligent Steambath, Valet Package, and Virtual Spa System are registered trademarks of MR.STEAM.

PUR 100597A REV 8.25