Installation, Operation and Maintenance Manual

xDream Package

mr.steam® | Feel Good Inc.

Installation, Operation & Maintenance Manual

iSteamX

mr.steam® | Feel Good Inc.®

READ ME FIRST!

WARNING As you follow these instructions, you will notice warning and caution symbols. This blocked information is important for the safe and efficient installation and operation of this generator. These are types of potential hazards that may occur during installation and operation:

WARNING Indicates a potentially hazardous situation, which, if not avoided, could result in death or serious injury.

CAUTION Indicates a potentially hazardous situation, which, if not avoided may result in minor or moderate injury or product damage.

NOTICE This highlights information that is especially relevant to a problem-free installation.

All information in these instructions is based on the latest product information available at the time of publication. Mr.Steam reserves the right to make changes at any time without notice.

When installing and using this electrical equipment, basic safety precautions should always be followed, including the following:

IMPORTANT SAFETY INSTRUCTIONS

1. **READ AND FOLLOW ALL INSTRUCTIONS**

2. **WARNING** Do not permit children under the age of 16 to use this steambath.

3. **WARNING** Steam is hot and can cause injury or death if improperly used. Steam rooms contain steam and elevated temperatures. Please read and observe all warnings in this manual before installing or using a steam room.

4. **WARNING** To reduce the risk of injury:

   A. The wet surfaces of steam enclosures may be slippery. Use care when entering or leaving.

   B. The steam head is hot. Do not touch the steamhead and avoid the steam near the steamhead.

   C. Prolonged use of the steam system can raise excessively the internal human body temperature and impair the body's ability to regulate its internal temperature (hyperthermia). Limit your use of steam to 10-15 minutes until you are certain of your body's reaction.

   D. Excessive temperatures have a high potential for causing fetal damage during the early months of pregnancy. Pregnancy or possibly pregnant women should consult a physician regarding correct exposure.

   E. Obese persons and persons with a history of heart disease, low or high blood pressure, circulatory system problems, or diabetes should consult a physician before using a steambath.

   F. Persons using medication should consult a physician before using a steambath since some medication may induce drowsiness while other medications may affect heart rate, blood pressure and circulation.

SAVE THESE INSTRUCTIONS

HYPERTHERMIA occurs when the internal temperature of the body reaches a level several degrees above the normal body temperature of 98.6° F. The symptoms of hyperthermia include an increase in the internal temperature of the body, dizziness, lethargy, drowsiness, and fainting. The effects of hyperthermia include:

a) Failure to perceive heat;
b) Failure to recognize the need to exit the steambath;
c) Unawareness of impending risk;
d) Fetal damage in pregnant women;
e) Physical inability to exit the steambath; and
f) Unconsciousness.

WARNING
The use of alcohol, drugs, or medication can greatly increase the risk of hyperthermia.

Table of Contents:

Important Safety Instructions 1

INSTALLER INFORMATION

Installation Template 1

Box Content 2

Dimensional Information 2

Before Installing 3

Locating the Control 4

iSteamX® Installation 5-6

USER/HOMEOWNER INFORMATION 7

Operating Instructions

Stand-By, Start, Program 8

Steam Settings, ChromaSteam, AromaSteam 9

Apps, User Profiles & Setting, User Programs 10

System Log: Passcode 11

AutoStart 11

SPAH20 12-15

Care Tips, Safety & Operating Info 16

Warranty 16

FCC Statement 17

Description of Operation 18

Box Contents:

- iSteamX Control
- iSteamX Hub
- Power Supply
- Control Cable w/Mini-Din (30ft)
- iSteamX cable w/Screw connector (30ft)
- Steamhead
- Tube of silicone sealant
- Owner's manual

Dimensional Information

iSteamX

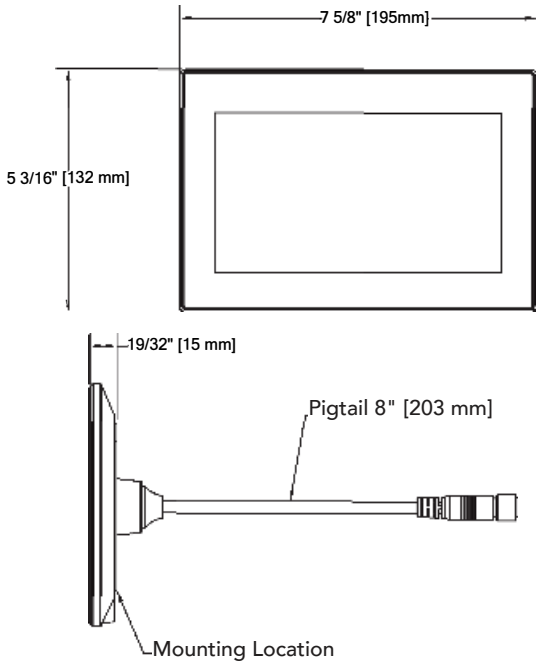

iSteamX Hub

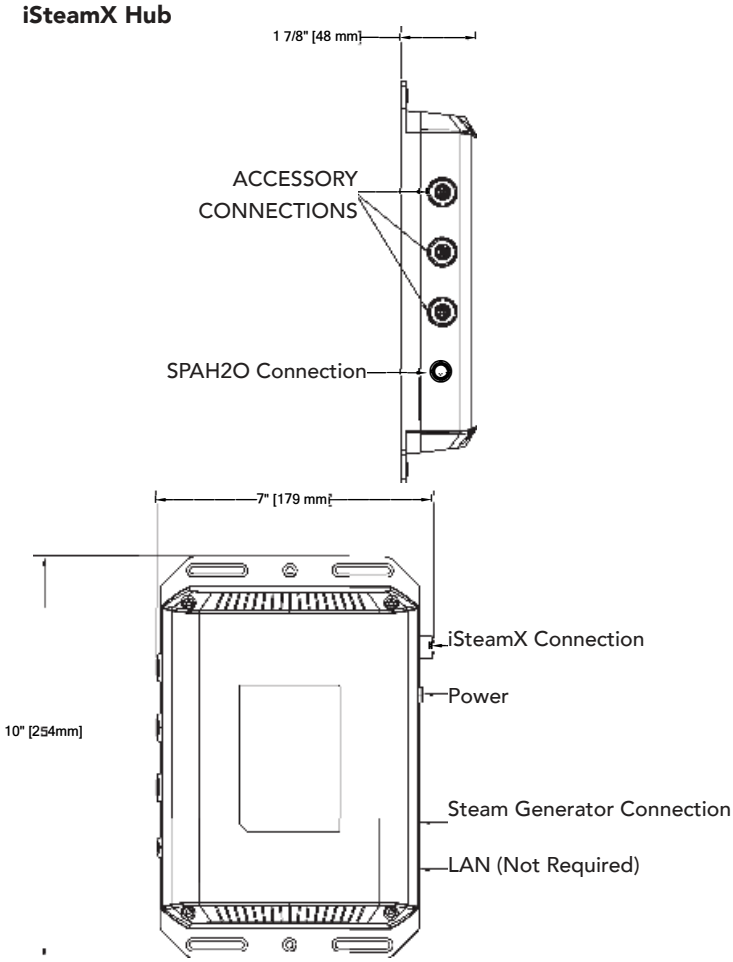

WARNING To avoid unintentional steambath operation, do not locate the control where other controls, accessories, shower heads, valves, body sprays or similar within the shower could cause confusion or interfere with the Mr.Steam control's intended use and function.

CAUTION

- To prevent possible injury Do Not use the iSteamX control without reading and understanding the Mr.Steam steam generator Installation and Operation Manual.
- A peel and stick warning sticker is provided in the Mr.Steam steam generator Installation, Operation and Maintenance Manual. This manual is provided with every steam generator. The warning sticker must be read and permanently affixed in a conspicuous location near the steam room. Failure to read and affix this warning sticker in a conspicuous location may result in serious injury or death. Please call Mr.Steam at 800 767-8326 for a free replacement or if you have any questions regarding the warning sticker.

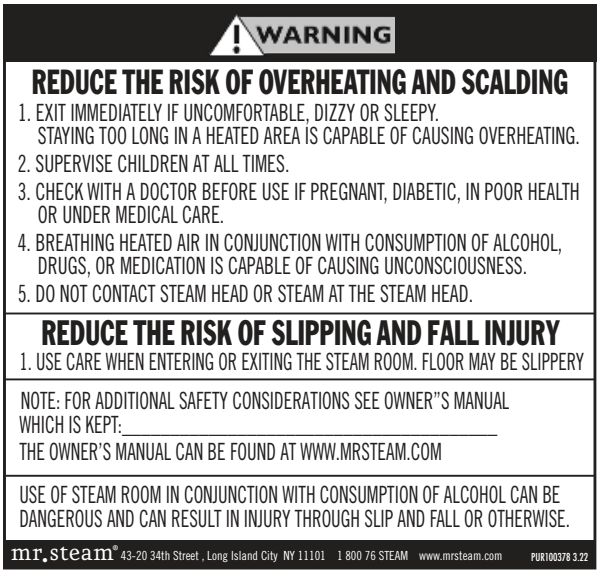
WARNING

REDUCE THE RISK OF OVERHEATING AND SCALDING

1. EXIT IMMEDIATELY IF UNCOMFORTABLE, DIZZY OR SLEEPY. STAYING TOO LONG IN A HEATED AREA IS CAPABLE OF CAUSING OVERHEATING.
2. SUPERVISE CHILDREN AT ALL TIMES.
3. CHECK WITH A DOCTOR BEFORE USE IF PREGNANT, DIABETIC, IN POOR HEALTH OR UNDER MEDICAL CARE.
4. BREATHING HEATED AIR IN CONJUNCTION WITH CONSUMPTION OF ALCOHOL, DRUGS, OR MEDICATION IS CAPABLE OF CAUSING UNCONSCIOUSNESS.
5. DO NOT CONTACT STEAM HEAD OR STEAM AT THE STEAM HEAD.

REDUCE THE RISK OF SLIPPING AND FALL INJURY

1. USE CARE WHEN ENTERING OR EXITING THE STEAM ROOM. FLOOR MAY BE SLIPPERY

NOTE: FOR ADDITIONAL SAFETY CONSIDERATIONS SEE OWNER"S MANUAL WHICH IS KEPT:_____
THE OWNER'S MANUAL CAN BE FOUND AT WWW.MRSTEAM.COM

USE OF STEAM ROOM IN CONJUNCTION WITH CONSUMPTION OF ALCOHOL CAN BE DANGEROUS AND CAN RESULT IN INJURY THROUGH SLIP AND FALL OR OTHERWISE.

mr.steam® 43-20 34th Street , Long Island City NY 11101 1 800 76 STEAM www.mrsteam.com PUR100378 3.22

Not actual size

- If an iSteamX control is installed outside the steam room a Remote Temperature Probe (PN MSTS) must be installed inside the steam room per installation instructions supplied with the Remote Temperature Probe. Failure to install according to instructions will result in an inoperative control and overheating of the steam room.

CAUTION Do not route iSteamX control wiring inside conduit together with power lines or close to hot water or steam piping. Doing so may result in an inoperative or hazardous installation. Do not alter or modify any Mr.Steam products including the steam generator or iSteamX control. Doing so may result in an inoperative or hazardous installation and will void the warranty.

IMPORTANT NOTES:

- Turn power to the steam generator OFF before connecting the control to the generator. Failure to turn the power off will result in an inoperable control.
- Do not operate the iSteamX control with other than a Mr.Steam iSteamX compatible steam generator. Mr.Steam residential steam generators with serial numbers lower than 1174000, or any other brand of steam generator are not to be operated with iSteamX controls. Doing so may result in an inoperative installation. If your generator's serial number is lower than 1174000 contact Mr.Steam Technical Service for up-grade options and components to enable your steam generator to function with iSteamX.
- This document contains important safety, operation and maintenance information. Leave this document with the homeowner. Do not discard this document.
- Discontinue use of the steam generator or control if the steam generator is damaged or otherwise not functioning properly. Doing so may result in an inoperative or hazardous installation
- Refer to the Steambath Generator Installation, Operation and Maintenance Manual for locating and installing the steamhead.

WARNING Do Not alter or modify any Mr.Steam products. Doing so may result in an inoperable or hazardous installation and will void the warranty.

Locating the Control

Determine the desired installation location of the control. The iSteamX controls are designed to be installed inside or outside the steam room as a matter of personal preference. If the control is installed inside the steam room:

- Locate the control 4-5 feet above the floor near the bather seating area.
- The control features an integral temperature sensor. Locate the control in a location representative of the desired steam bathing temperatures. Do not locate the control above or near the steam head or direct steam emissions.
- Locate the control on a vertical wall.
- The control cable is 30 feet. Insure that the control and steam generator are located accordingly.

IMPORTANT NOTES:

- If required, contact Mr.Steam to purchase an optional 60' iSteamX control cable part number 104541-60.
- If the control is installed outside the steam room a Remote Temperature Probe Part Number MSTS must be installed inside the steam room. Refer to the MSTS installation manual before installing the control.
- Ensure Mr.Steam steam generator is iSteamX compatible and has a serial number 1174000 or higher.

STEP 1
Make a 1-1/4" diameter hole in the desired control location.

STEP 2
Route the control cable from the wall cutout to the iSteamX Hub. Plug in and thread the connector collar into the Hub at the location marked Control.

IMPORTANT NOTE: The connector is keyed, it will only connect one way.

IMPORTANT NOTE: The control cable should be in a dedicated 1" conduit to fucilitate installation and service. Be careful not to strain, staple, pinch or otherwise damage the control cable. Route cable as required to permit replacement. Do not route cable inside conduit together with power lines or close to hot water or steam piping.

Finish the iSteamX installation using the instructions on page 7.

Installation Instructions for iSteamX

STEP 1.
Mount the hub securely. The hub may be mounted in any orientation.

Plug the 30 foot generator cable into the generator and into the hub.

CAUTION Do not force or twist cable ends together. Forcing or twisting cable ends may damage the connectors.

Plug the 30 foot control cable into the hub and into the iSteamX. Thread to connector collars together.

Plug the hub's power supply into an outlet.

Important Note: iSteamX must have an Internet connection for some functions. iSteamX may be connected to Wi-Fi. If iSteamX is located in an area with a poor Wi-Fi signal, a LAN connection from the router can be plugged into the iSteamX HUB.

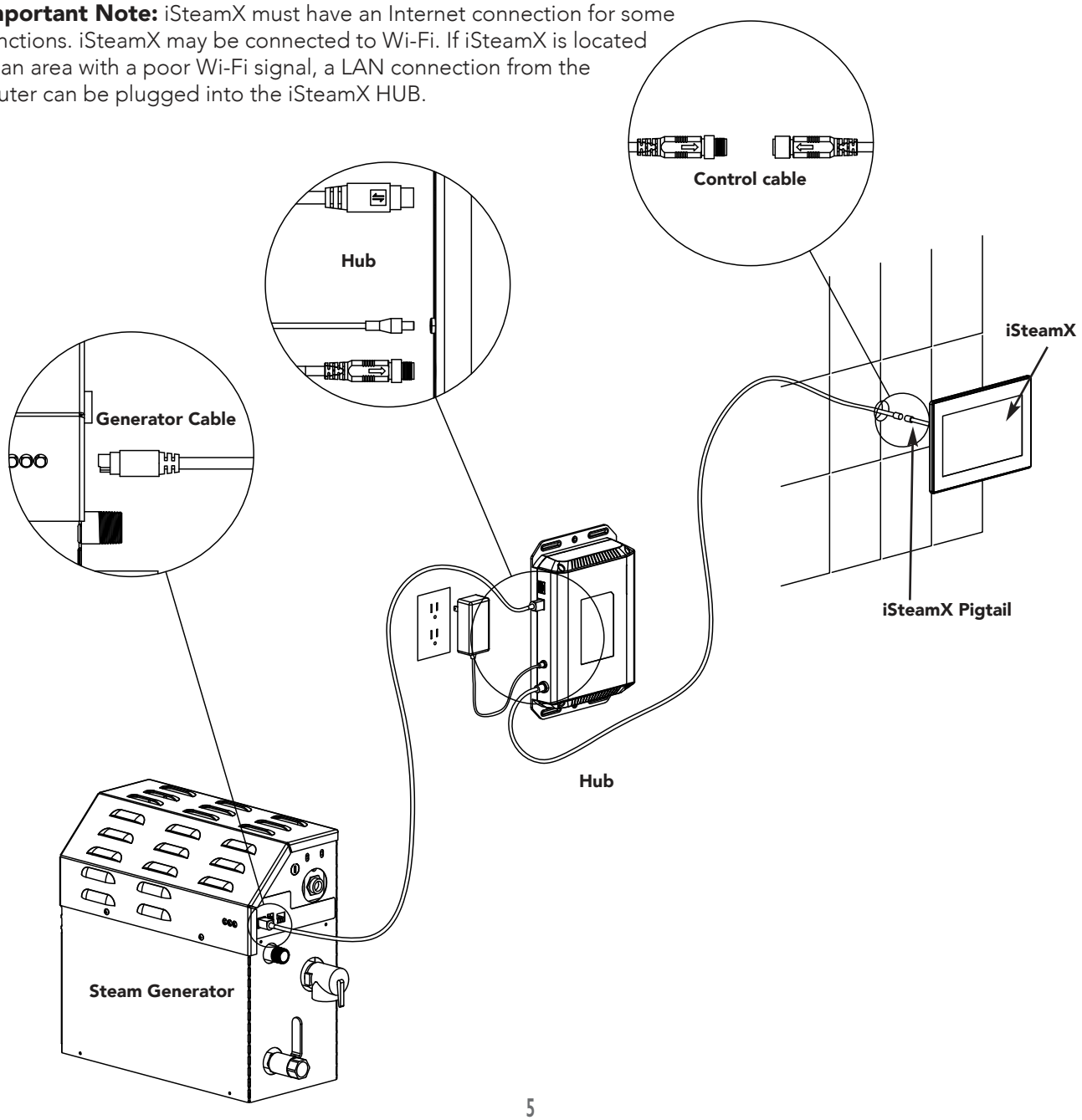

Installation Instructions for iSteamX (cont.)

STEP 2
Peel the double stick adhesive off the back of the iSteamX control (2a). Apply a bead of silicone around the rear of the iSteamX control to create a moisture seal (2b). Care must be taken to not pinch the cables. Ensure the control is level.

IMPORTANT NOTE: The control must be installed.

NOTE: The silicone supplied by Mr.Steam can be used to meet a variety of sealing and gasketing. It cures to silicone rubber and adheres to glass, wood, metal, porcelain, ceramic tile, painted surfaces, many plastics and rubber. Surfaces must be clean and dry. Apply thin layer of product. Fit together and support if necessary. Allow excess material to cure, then trim with a sharp blade. Sealant "skins" in 5 minutes, dries to touch in 1 hour. Fully cures and bonds in 24 hrs.

IMPORTANT NOTE: Do not apply excessive amounts of silicone. Do not apply silicone to any other parts of the control including the adhesive gasket. Ensure the mounting surface is clean and dry as required for good adhesion. Hold the control with the arrow on the screen protector facing up and press the control against the wall until the adhesive sticks and holds firmly. Control may have to be supported or secured until the silicone has cured for 24 hours.

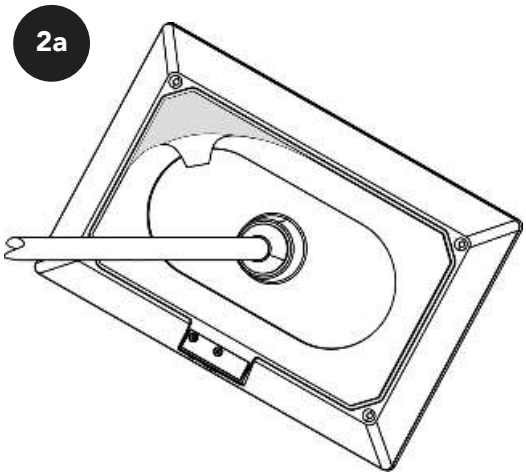

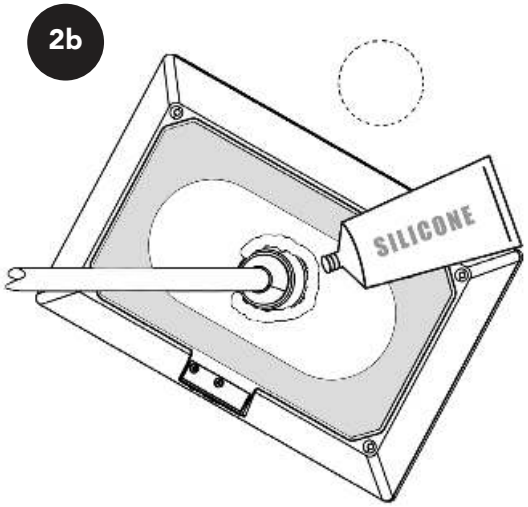

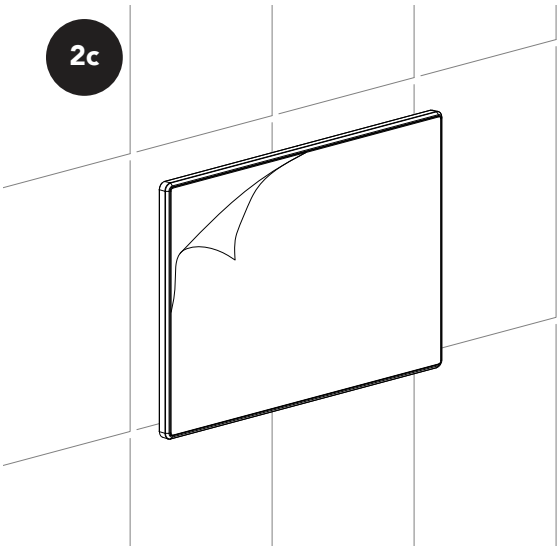

mr.steam®

HOMEOWNER SECTION

READ ME FIRST!

WARNING As you follow these instructions, you will notice warning and caution symbols. This blocked information is important for the safe and efficient installation and operation of this generator. These are types of potential hazards that may occur during installation and operation:

WARNING Indicates a potentially hazardous situation, which, if not avoided, could result in death or serious injury.

CAUTION Indicates a potentially hazardous situation, which, if not avoided may result in minor or moderate injury or product damage.

IMPORTANT NOTE: This highlights information that is especially relevant to a problem-free installation.

All information in these instructions is based on the latest product information available at the time of publication. Mr.Steam any time without notice.

When installing and using this electrical equipment, basic safety precautions should always be followed, including the following:

IMPORTANT SAFETY INSTRUCTIONS

1. **READ AND FOLLOW ALL INSTRUCTIONS**
2. **WARNING** Do not permit children under the age of 16 to use this steambath.
3. **WARNING** Steam is hot and can cause injury or death if improperly used. Steam rooms contain steam and elevated temperatures. Please read and observe all warnings in this manual before installing or using a steam room.
4. **WARNING** To reduce the risk of injury:
   - **A.** The wet surfaces of steam enclosures may be slippery. Use care when entering or leaving.
   - **B.** The steam head is hot. Do not touch the steamhead and avoid the steam near the steamhead.
   - **C.** Prolonged use of the steam system can raise excessively the internal human body temperature and impair the body's ability to regulate its internal temperature (hyperthermia). Limit your use of steam to 10-15 minutes until you are certain of your body's reaction.
   - **D.** Excessive temperatures have a high potential for causing fetal damage during the early months of pregnancy. Pregnancy or possibly pregnant women should consult a physician regarding correct exposure.
   - **E.** Obese persons and persons with a history of heart disease, low or high blood pressure, circulatory system problems, or diabetes should consult a physician before using a steambath.
   - **F.** Persons using medication should consult a physician before using a steambath since some medication may induce drowsiness while other medications may affect heart rate, blood pressure and circulation.

SAVE THESE INSTRUCTIONS

HYPERTHERMIA occurs when the internal temperature of the body reaches a level several degrees above the normal body temperature of 98.6° F. The symptoms of hyperthermia include an increase in the internal temperature of the body, dizziness, lethargy, drowsiness, and fainting. The effects of hyperthermia include:

a) Failure to perceive heat;

b) Failure to recognize the need to exit the steambath;

c) Unawareness of impending risk;

d) Fetal damage in pregnant women;

e) Physical inability to exit the steambath; and

f) Unconsciousness.

WARNING The use of alcohol, drugs, or medication can greatly increase the risk of hyperthermia.

WARNING The peel and stick warning label located in the steam bath generator manual is an essential part of providing a safe environment for steam room users. The peel and stick warning label must be applied to the wall of the shower or steam enclosure, at a point that is visible to all users. Failure to install this sticker may result in serious injury or death.

The location where this owner's manual is kept shall be written in the space provided on the label using permanent ink.

For a replacement warning label contact MrSteam customer service at 1-800-76-STEAM or hello@mrsteam.com

WARNING

REDUCE THE RISK OF OVERHEATING AND SCALDING

1. EXIT IMMEDIATELY IF UNCOMFORTABLE, DIZZY OR SLEEPY. STAYING TOO LONG IN A HEATED AREA IS CAPABLE OF CAUSING OVERHEATING.
2. SUPERVISE CHILDREN AT ALL TIMES.
3. CHECK WITH A DOCTOR BEFORE USE IF PREGNANT, DIABETIC, IN POOR HEALTH OR UNDER MEDICAL CARE.
4. BREATHING HEATED AIR IN CONJUNCTION WITH CONSUMPTION OF ALCOHOL, DRUGS, OR MEDICATION IS CAPABLE OF CAUSING UNCONSCIOUSNESS.
5. DO NOT CONTACT STEAM HEAD OR STEAM AT THE STEAM HEAD.

REDUCE THE RISK OF SLIPPING AND FALL INJURY

1. USE CARE WHEN ENTERING OR EXITING THE STEAM ROOM. FLOOR MAY BE SLIPPERY

NOTE: FOR ADDITIONAL SAFETY CONSIDERATIONS SEE OWNER"S MANUAL WHICH IS KEPT:_____

THE OWNER'S MANUAL CAN BE FOUND AT WWW.MRSTEAM.COM

USE OF STEAM ROOM IN CONJUNCTION WITH CONSUMPTION OF ALCOHOL CAN BE DANGEROUS AND CAN RESULT IN INJURY THROUGH SLIP AND FALL OR OTHERWISE.

mr.steam® 43-20 34th Street , Long Island City NY 11101 1 800 76 STEAM www.mrsteam.com PUR100378 3.22

Not actual size

Operating Instructions

WARNING Set the steam bathing duration and temperature according to personal preference, however it is highly recommended to begin steam bathing at a low temperature setting to gauge comfort and safety levels. Set the duration at 10 minutes maximum to gauge comfort and safety levels. This will allow the steam generator to heat up and begin producing steam.

Stand-By Screen

Touch anywhere on the clock screen to wake up the control

Start Screen

Press the **START** button to turn the steam generator on. If you had selected a user profile and program when the control was woken up they system will start with the saved parameters. Steam will begin to slow a few minutes after the START button is pressed. The time required for the steam room to reach steam bathing temperature depends on the steam room construction and steam generator specifications

Program Selection

User settings can be adjusted two ways, while steam is running drag the dashboard up from the bottom of the screen. AromaSteam can be turned **ON/OFF**, ChromaSteam can be turned **ON/OFF** and color adjusted and the room temperature can be adjusted.

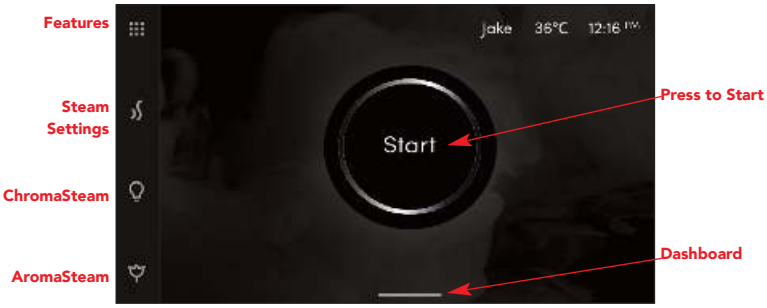

Steam Settings

Steam settings can also be adjusted by tapping the Steam Settings icon on the main screen. From the steam setting screen select either Temperature or Duration. To adjust temperature use the + and – buttons. To adjust duration swipe the time up and down. To return to the main screen tap the **X** in the upper right.

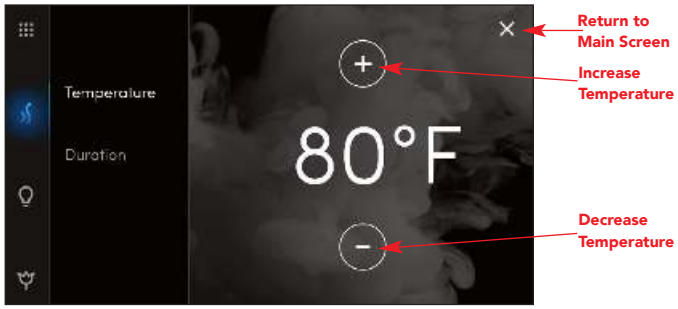

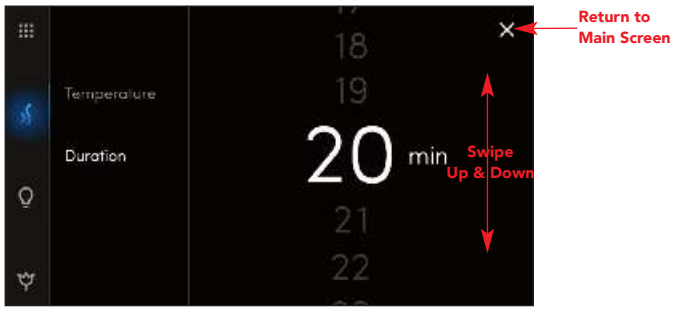

ChromaSteam

The ChromaSteam is an optional accessory that activates colored lights in the steam room. Press the ChromaSteam button to access the dashboard. The light is turned **ON/OFF** from the interface. Touch anywhere on the color wheel to select that color. To adjust brightness, use the slider on the bottom of the ChromaSteam dashboard. *(Note: Brightness cannot be adjusted in automatic color changing modes)*

Press the discrete color selection button to pick from a preselected set of colors or one of the two color changing modes.

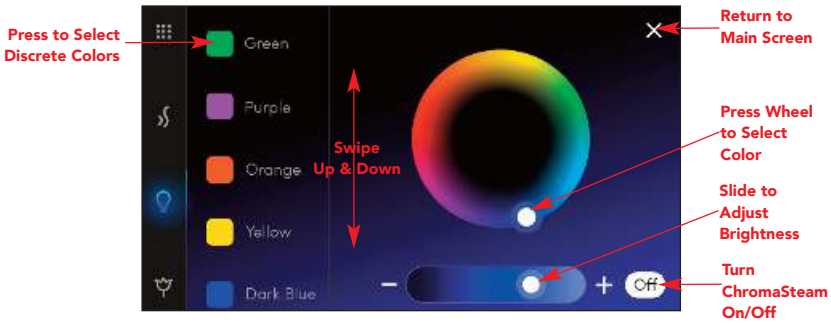

AromaSteam

The AromaSteam is an optional accessory that automatically infuses aromatic oils into the steam flow. Press the AromaSteam button to bring up that AromaSteam dashboard

Apps

iSteamX must be connected to WiFi to use apps
iSteamX must be paired with a Mr.Steam Audio@Home to hear audio from apps iSteamX includes a preinstalled selection of popular entertainment apps. Apps cannot be added or removed from iSteamX. The user interface of the preinstalled Apps may differ slightly from those apps installed on Smartphones. User accounts for the 3rd party apps are required to use some/ all of their features.

Access Apps by pressing the Features icon.

When apps are running they can be closed by pressing the X icon or minimized by pressing the <.

Only one App can run at a time. An open app will automatically close if another app is opened.

User Profiles & Setting

User profiles are found in the features menu. Press Add Profile to create a user profile. Once a user profile is created, it can be made active by tapping the profile name. User profiles can be deleted by pressing the trashcan.

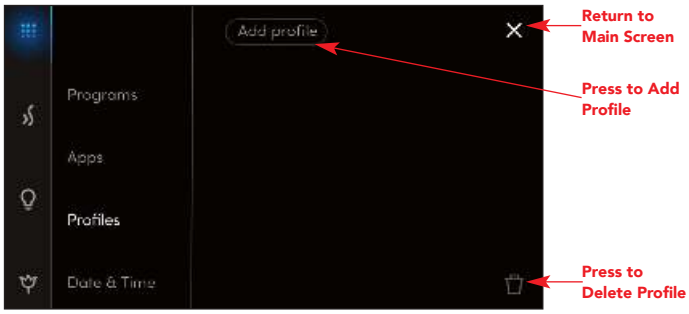

User Programs

In the features menu select a profile before creating a program. To create a program press the add program button. A keyboard will open and the user will be prompted to name a program.

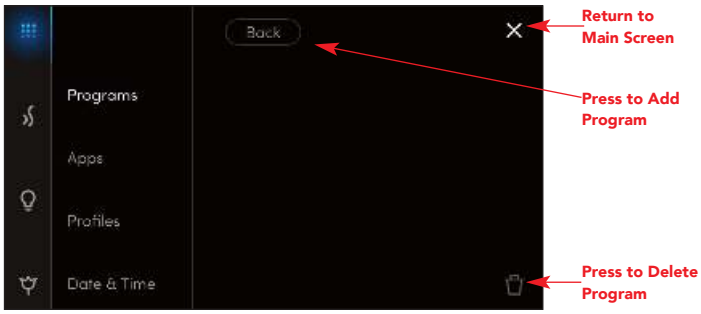

Each program can include a setting for steam and if equipped color of ChromaSteam. Select which options to include in the program by checking the box. Navigate through the set up by pressing the **NEXT** button

System Settings

Password Lock

The password lock can help prevent unintentional use of the steambath. Please refer to the steam generator installation, operation and maintenance manual before using the steambath. The passcode lock cannot ensure unintentional use of the steambath

To turn the password lock on, press **ON** and then enter a number when prompted and confirm to save. The next time iSteamX is turned on the user will be prompted to enter the password.

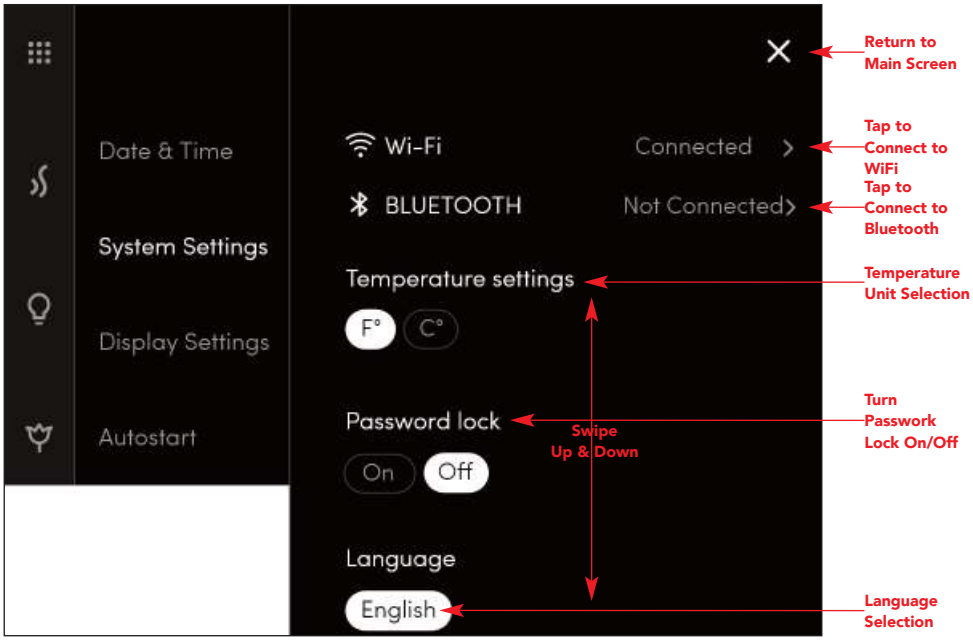

AutoStart

AutoStart will automatically turn the steam generator on at your preset time. Activating the steam in an occupied room may subject persons to hazards described in this manual. Only activate the steambath if the steam room door is closed. Activating or using the steambath with an open door may cause property damage or injury to persons outside of the steam bath.

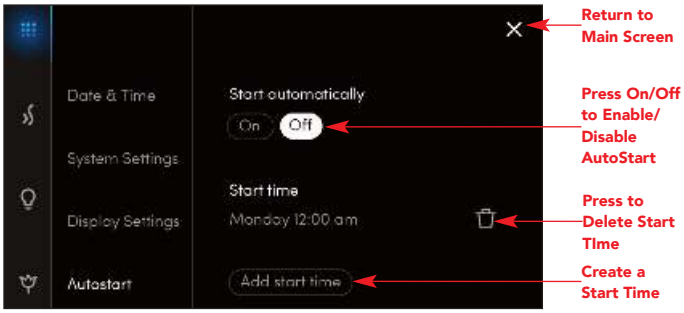

The AutoStart feature can be used to turn on the steambth at a predetermined time. Select the day(s) of the week and the time of day you would like to turn the steam bath on.

When AutoStart starts your steambath it will allow the steambath to run for only 10 minutes. To continue steam bathing press the continue button. If the continue button is pressed AutoStart will remain active.
To stop the steam bath press the **STOP** button

If the **STOP** button or 10 minute time out turns the steam generator off. AutoStart will automatically be deactivated.

To create an AutoStart time tap the Add Start Time button. Select the start time and day(s) of the week for AutoStart. A maximum of 8 start times can be programmed. To delete a start time, press the trash icon.

To turn AutoStart on press the **ON** button.

SPAH2O

START UP OPERATION

CAUTION For proper operation, a learning mode bust be initiated from the iSteamX prior to using SPAH2O.

CAUTION Ensure any unused shower valve outlets are capped prior to using the learning mode

SPAH2O is compatible with iSteamX controls with software version 1.7.70 and higher. Contact MrSteam Technical Service at 1-800-767-8326 Ext. 1120 regarding software updates.

Shower Learning

From the start screen, navigate to the features menu by pressing the features icon

Navigate to Shower Setup in features menu and press Shower Learning. The hot and cold supply must be on and the shower fixtures MUST be connected. The control will display a message that says the shower learning is in progress. While the learning is taking place the outputs will open and close to learn the flow characteristics of each fixture.

All drawing are for illustrative purposes only

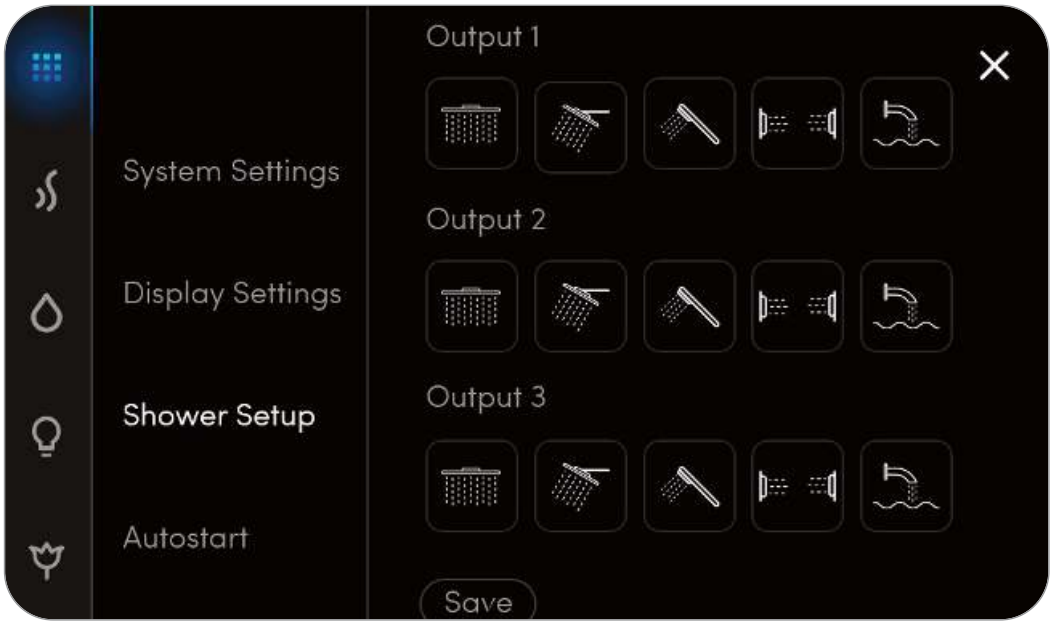

Once the shower leaning has been completed, each output can be assigned a fixture icon (note each may only be used once) Select the icon the corresponds to the output, once the selections are made press SAVE. Note: If an output is not plumbed you will not be able to make a selection for it

OPERATION

Navigate to the shower user interface using the steam / shower toggle

OPERATION

Press the ON/OFF button to start and stop the shower. The shower value will always start output 1.

Press the water droplet icon to navigate to the temperature/flow adjustment screen

SPAH20 can have 2 outlets open at a time. To open a second outlet press the icon representing that output. Pressing the icon of an active outlet will turn it off. If two outlets are open, pressing the icon for a 3rd outlet will close the two open outlets and open the third

To turn the SPAH2O off, turn off the individual outlets or press the ON/OFF button.

IMPORTANT NOTE: SPAH2O automatically turns off after 20 minutes

All drawing are for illustrative purposes only

OPERATION

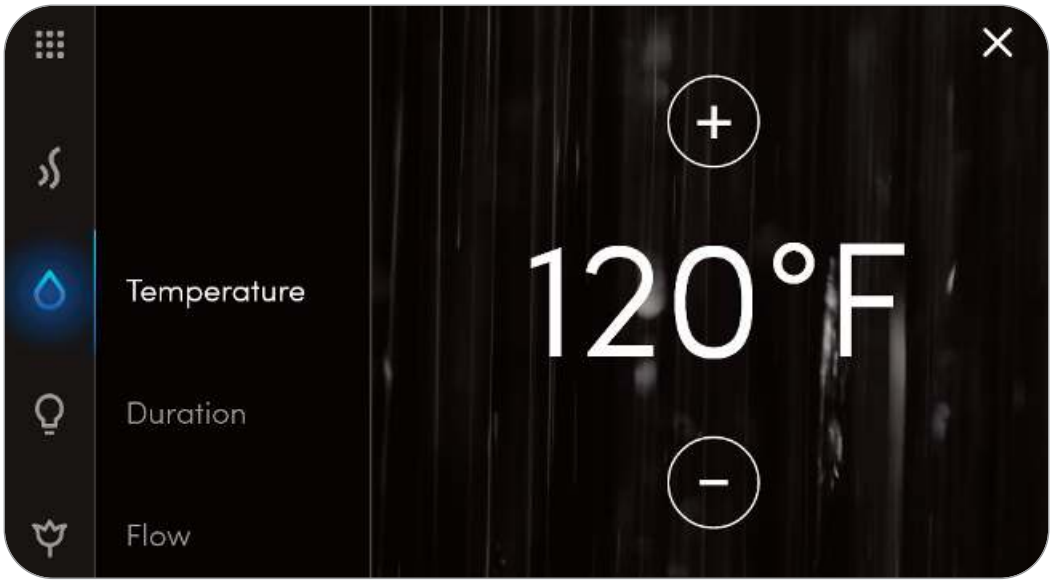

Tap Temperature to adjust the temperature of the shower. Use the + and – buttons to adjust the temperature.
NOTE: The maximum allowable set point temperature is 118 *F. iSteamX will not allow a temperature to be set above what the valve is capable of based on water supply temperatures and fixtures flowrates.

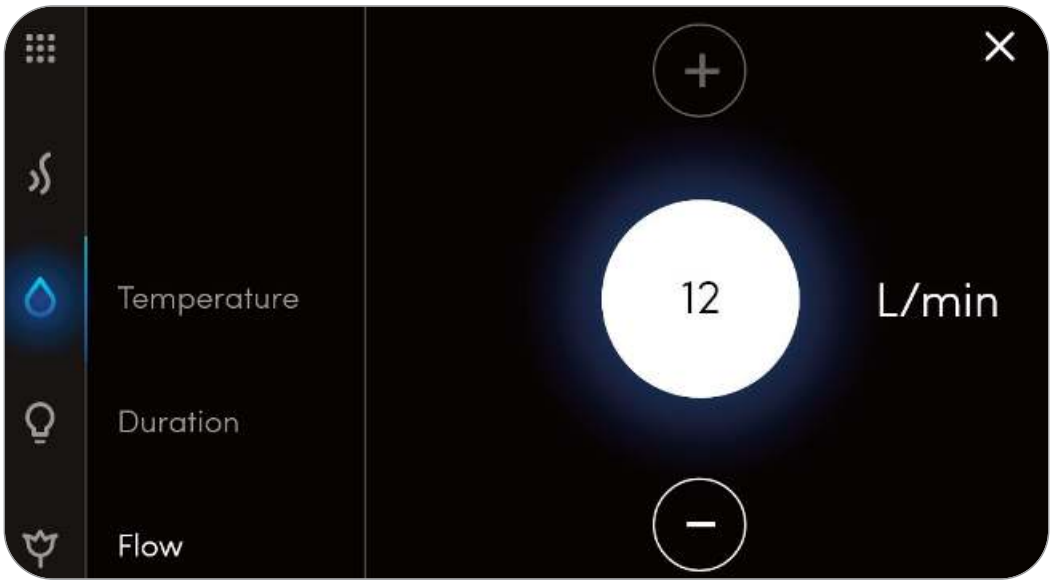

Tap Flow to adjust the volume of the shower. Use the + and – buttons to adjust the volume.

Note: maximum allowable flow rate is 5.5 gpm (21 L/min) for one output and a total of 7.4 gpm (28 L/min) when two outputs are open iSteamX will not allow the user to set a flow rate higher than the rating of the fixture. iSteamX will not allow a flow rate which is not achievable based on the temperature setting and in supply temperatures and flow rates.

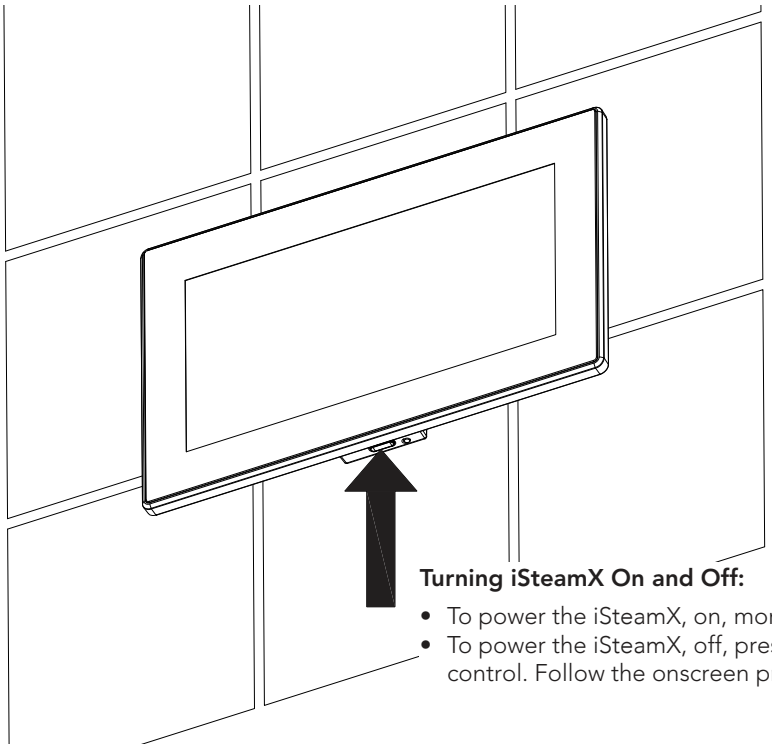

Turning iSteamX On and Off:

- To power the iSteamX, on, momentarily press the button on the bottom edge.
- To power the iSteamX, off, press and hold the button on the bottom edge of the control. Follow the onscreen prompts for power the iSteamX, off

Care Tips

Use only mild soap and water on a soft cloth to clean the control. Do not use abrasive cleansers.

Safety & Operating Information

WARNING A peel and stick warning sticker is provided in the Mr.Steam steam generator Installation, Operation and Maintenance Manual. This manual is provided with every steam generator. The warning sticker must be read and permanently affixed in a conspicuous location near the steam room. Failure to read and affix this warning sticker in a conspicuous location may result in serious injury or death. Please call Mr.Steam at 800 767-8326 for a free replacement or if you have any questions regarding the warning sticker.

WARNING Set the steam bathing duration and temperature according to personal preference, however it is highly recommended to begin steam bathing at a low temperature setting to gauge comfort and safety levels. Set the duration at 10 minutes max. to gauge comfort and safety levels. This will allow the steam generator to heat up and begin producing steam.

CAUTION Do not use any iSteamX control without reading and understanding the Mr.Steam steam generator Installation and Operation Manual (PN 100472). Failure to read and understand these instructions may result in an inoperative or hazardous installation.

CAUTION If an iSteamX control is installed outside the steam room a Remote Temperature Probe (PN MSTS) must be installed inside the steam room per installation instructions supplied with the Remote Temperature Probe. Failure to install according to instructions will result in an inoperative control and overheating of the steam room.

Warranty

To view or download the MrSteam Control Warranty and register your product go to: **blog.mrsteam.com/wr**

FCC Statement:

Any Changes or modifications not expressly approved by the party responsible for compliance could void the user's authority to operate the equipment.

This device complies with part 15 of the FCC Rules. Operation is subject to the following two conditions:

1. This device may not cause harmful interference, and
2. This device must accept any interference received, including interference that may cause undesired operation.

Note: This equipment has been tested and found to comply with the limits for a Class B digital device, pursuant to part 15 of the FCC Rules. These limits are designed to provide reasonable protection against harmful interference in a residential installation. This equipment generates uses and can radiate radio frequency energy and, if not installed and used in accordance with the instructions, may cause harmful interference to radio communications. However, there is no guarantee that interference will not occur in a particular installation. If this equipment does cause harmful interference to radio or television reception, which can be determined by turning the equipment off and on, the user is encouraged to try to correct the interference by one or more of the following measures:

- Reorient or relocate the receiving antenna.
- Increase the separation between the equipment and receiver.
- Connect the equipment into an outlet on a circuit different from that to which the receiver is connected.
- Consult the dealer or an experienced radio/TV technician for help.

This transmitter must not be co-located or operating in conjunction with any other antenna or transmitter. This equipment complies with FCC radiation exposure limits set forth for an uncontrolled environment. This equipment should be installed and operated with minimum distance 20cm between the radiator & your body.

ISED Statement:

This device contains licence-exempt transmitter(s)/receiver(s) that comply with Innovation, Science and Economic Development Canada's licence-exempt RSS(s). Operation is subject to the following two conditions:

1. This device may not cause interference.
2 This device must accept any interference, including interference that may cause undesired operation of the device.

L'émetteur/récepteur exempt de licence contenu dans le présent appareil est conforme aux. CNR d'Innovation, Sciences et Développement économique Canada applicables aux appareils radio exempts de licence. L'exploitation est autorisée aux deux conditions suivantes:

1. L'appareil ne doit pas produire de brouillage;
2. L'appareil doit accepter tout brouillage radioélectrique subi, même si le brouillage est susceptible d'en compromettre le fonctionnement.

This transmitter must not be co-located or operating in conjunction with any other antenna or transmitter. Cet émetteur ne doit pas être colocalisé ou fonctionner en conjonction avec une autre antenne ou un autre émetteur. The device meets the exemption from the routine evaluation limits in section 2.5 of RSS-102 and compliance with RSS-102 RF exposure, users can obtain Canadian information on RF exposure and compliance. This equipment should be installed and operated with a minimum distance of 20 centimeters between the radiator and your body.

Le dispositif rencontre l'exemption des limites courantes d'évaluation dans la section 2.5 de RSS 102 etla conformité à l'exposition de RSS-102 rf, utilisateurs peut obtenir l'information canadienne surl'exposition et la conformité de rf. Cet émetteur ne doit pas être Co-placé ou ne fonctionnant en même temps qu'aucune autre antenne ouémetteur. Cet équipement devrait être installé et actionné avec une distance minimum de 20 centimètres entre le radiateur et votre corps.

Description of Operation

Description

The product is a 7" Panel-PC based on Rockchip PX30 Cortex 35 chipset platform with Android 10.

The central processor units include the CPU, DDR memory and flash.

The PX30 is the main application processor, and SAMSUNG 2GB DDR3 system memory at PCBA. The SAMSUNG 16G eMMC is the system internal storage for OS or other data. The wireless unit includes WIFI/BT. The 6221A-SRC module provides the highest level of integration for a mobile or handheld wireless system with integrated IEEE 802.11 a/b/g/n/ac standard and Bluetooth® 4.2.

The panel-PC will starting up automatically when powered on, the panel PC will display the boot up logo.

The system will discontinue transmission automatically and make the module enter standby mode with no connection. It cannot send and receive any data to preclude the transmission of control or signaling information or the use of repetitive codes used by certain digital technologies to complete frame or burst intervals.

Technical Specifications

WIFI Module

- Operation frequency: 2.412 GHz ~ 2.462 GHz (2.4 GHz ISM Band), 5.180 GHz ~ 5.240 GHz, 5.745 GHz ~ 5.825 GHz (5.0 GHz ISM Band).
- WLAN function: Supports 802.11a, 802.11b, 802.11g/n, 802.11ac
- Modulation Type: Supports DBPSK/DQPSK/CCK(DSSS), BPSK/QPSK/16QAM/64QAM(OFDM), BPSK/QPSK/16QAM/64QAM/256QAM(OFDM)
- Modulation type Transfer Rate (Mbps):
  - o 802.11a : 6, 12, 54Mbps
  - o 802.11b : 1, 11Mbps
  - o 802.11g : 6, 12, 54Mbps
  - o 802.11n: 6.5, 13, 19.5, 26, 39, 52, 58.5, 65Mbps
- Antenna Type: PCB
- Gain: 1.3dBi for 2.4G and 1.3dBi for 5G.

Bluetooth Features

- Compliant with Bluetooth4.2 specification
- Operation frequency: 2402MHz~2480MHz
- Modulation Type: GFSK, π/4DQPSK, 8DPSK
- Antenna Type: PCB
- Gain: 1.3dBi

Crystal

Main board: 24MHz for CPU, 32.768KHz for PMU, 25MHz for PHY.

www.mrsteam.com

Products, information and specifications are subject to change without notice.
Please call Technical Support at 1.800.76.STEAM (East Coast) or 1.800.72.STEAM (West Coast) for more information.

NOTICE The model and serial number is printed on the data plate on the front of the steam bath generator. Have this information available when contacting Technical Service.

mr.steam® | hello@mrsteam.com | www.mrsteam.com

43-20 34th Street, Long Island City, NY 11101 TEL: 1 800 76 STEAM I 9410 S. La Cienega Blvd. Inglewood CA 90301 TEL: 1 800 72 STEAM

2020 © MrSteam and des., A Lifetime of Pleasure, AirTempo, AromaFlo, AudioWizard, AutoFlush, AutoSteam, Butler Package, ChromaSteam, Clean Steam...Every Time, Club Therapy, CT Day Spa, Digital 1, Express Steam, Feel Good Inc., From Bathroom to Spa, HomeWizard, iButler, iGenie, iSpa Package, iSteam, iTempo, iTempo/Plus, Linear Steamhead, Making Wellness a Way of Life, Music Therapy, My Steam, SmartSizing, Spa Package, Steam Genie, Steam on Demand, Steam in a Box, Steam@Home, SteamStart, SteamTherapy, MrSteam, Tala, Tala Bath & Body, Tempo, The Intelligent Steambath, Valet Package, and Virtual Spa System are registered trademarks of MrSteam.

INSTALLATION INSTRUCTIONS

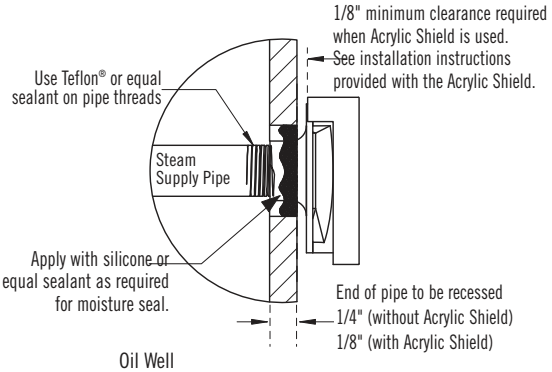

IMPORTANT: See the Installation and Operation Manual provided with the steam generator for additional important steamhead & control installation and operation information.

Installation: Steam Head (3/4" NPT)

CAUTION **INSTALLER:** Because the steam head and direct steam emissions are very hot, locate the steam head where incidental contact by bather with the steam head or direct steam emission cannot occur.

STEP 1 Locate steam head 6-12 inches above floor, except for:

1. Tub/shower enclosures, install 6 inches above tub top edge.
2. For enclosures with acrylic or other non-heat resistant flooring install Acrylic Shield Part Number 103938.
3. To prevent door seals from deteriorating do not locate the steam head where direct steam emission would contact door seals.

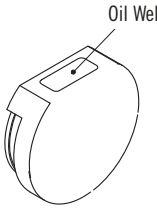

STEP 2 Install steamhead with the oil well facing up as shown. Hand tightening is sufficient when teflon or equal pipe thread sealing compound is used.

IMPORTANT NOTE: to preserve steam head finish, do not use wrench or other tools to tighten. **DO NOT** use abrasive cleansers or chemicals. Use only water with mild soap and a non-abrasive sponge.

CAUTION Consult with supplier of acrylic, fiberglass and other non-heat resistant enclosures for recommended steamhead location. Use Acrylic Shield part number MS-103938. See instructions provided with steam shield.

STEP 3 Secure a bronze drop ear fitting to a header and run a 3/4" copper steamline from the steam generator to the drop ear fitting. Install a temporary nipple (6" or longer)in the drop ear fitting to locate the steamhead after the wall is finished.

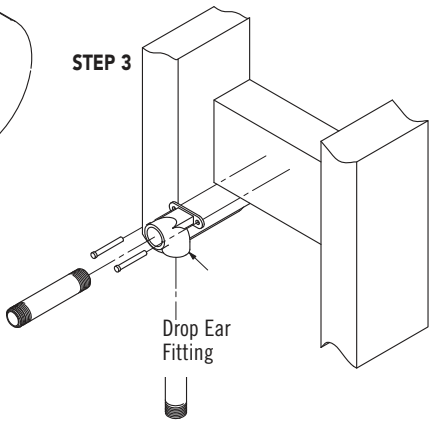

STEP 4 After the wall has been finished, mark on the nipple where the surface of the wall is. Remove the nipple and measure the portion that was in the wall (the end to your mark). Subtract 1/4" from that dimension and select a brass nipple of that length to finish the installation.

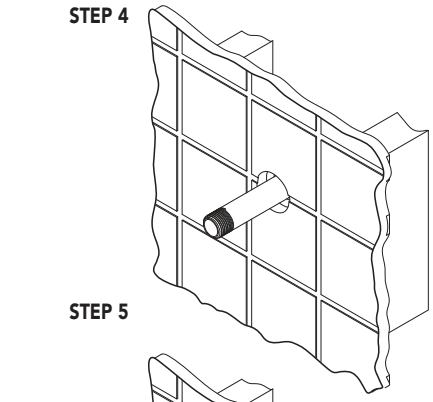

STEP 5 Wrap teflon tape around the threads of the new nipple and screw the nipple into the steamhead. Do not use wrenches or tools which would damage the steamhead's finish. Wrap teflon tape around the threads of the nipple and screw the nipple and steamhead assembly you just made into the drop ear fitting in the wall. The steamhead should be flush with the wall and the well must be facing up.

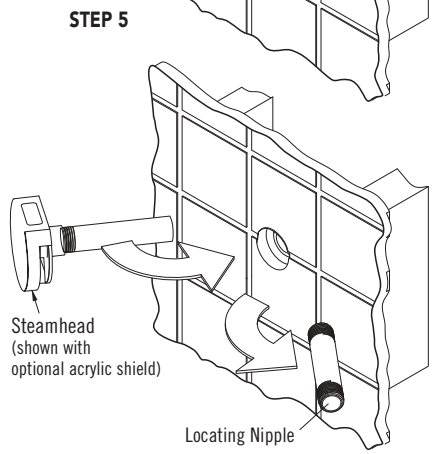

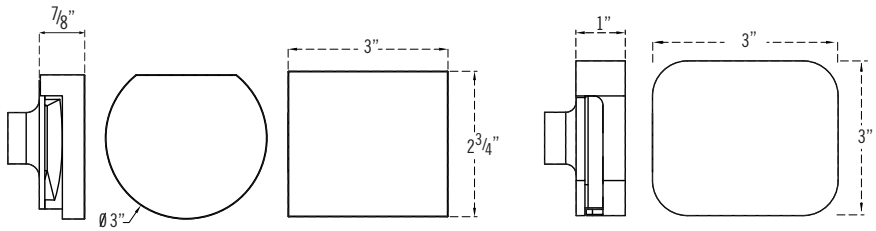

All drawings are for illustrative purposes only

mr.steam® hello@mrsteam.com www.mrsteam.com
43-20 34th Street, Long Island City, NY 11101 tel: 1 800 76 STEAM
9410 S. La Cienega Blvd. Inglewood CA 90301 tel: 1 800 72 STEAM

Installation, Operation and Maintenance Manual

Linear Steam Head

Residential Model: 104480

IMPORTANT: Leave this material with the homeowner.

mr.steam® | Feel Good Inc.®

TABLE OF CONTENTS

Important Safety Information 1-2

Installer Section:

Box Contents 3

Dimensional Information 3

General Installation 4

Faceplate 5

Installer and Home Owner Section:

Steam Emission Zone 6

Diverter 7

AromaTray 8

Replacement Parts 9

Warranty 9

Essential Oils 10

mr.steam® hello@mrsteam.com • www.mrsteam.com

43-20 34th Street, Long Island City, NY 11101 tel: 1 800 76 STEAM

9410 S. La Cienega Blvd. Inglewood CA 90301 tel: 1 800 72 STEAM

Linear Steam Head®

mr.steam®

Installer Section

Model 104480

READ ME FIRST! As you follow these instructions, you will notice **CAUTION** and **NOTICE** symbols. This information is important for the proper, safe and trouble free installation of the Linear Steam Head. These are types of potential hazards that may occur if installation instructions are not carefully followed:

CAUTION This signals a situation where injury or property damage may occur if you do not follow instructions.

NOTICE This highlights information that is especially relevant to a problem free installation.

All information in these instructions is based on the latest information available at the time of publication. MrSteam reserves the right to make changes at any time without notice.

CAUTION The following general information should be used in conjunction with consultations with a qualified architect, designer and contractor in determining factors necessary in providing a suitable and safe steam room.

CAUTION This document contains important safety, operation and maintenance information. After installation leave these instructions with the homeowner. Do not discard this instructions. Failure to leave the instructions with the homeowner may result in property damage or personal injury.

CAUTION Use one or more Linear Steam Heads for MrSteam steam generator models MS90 – MS400 and MSSUPER1–MSSUPER3, SAH3000-SAH6000.

CAUTION Use two or more Linear Steam Heads for MrSteam steam generators Models MX4, MX5 and MX6. Failure to use two or more steam heads may result in steam head operation where incidental contact by the bather with direct steam emission may occur. Failure to use two or more steam heads may result in a leak within the wall cavity and cause problems associated with leaks, moisture and property damage from leaks. Failure to use two or more steam heads may result in a hazardous condition, scalding or personal injury.

CAUTION Do not use Linear Steam Head for any MrSteam steam generator that is not one of the following models: MS90 –MS400, MSSUPER1–MSSUPER3, SAH3000-SAH6000 or MX4 –MX6. Failure to follow these instructions may result in a leak within the wall cavity and cause problems associated with leaks, moisture and property damage from leaks. Failure to follow these instructions may result in a hazardous condition, scalding or personal injury.

CAUTION Do not use the Linear Steam Head with any steam system that is not a MrSteam steam system. Failure to follow these instructions may result in a leak within the wall cavity and cause problems associated with leaks, moisture and property damage from leaks. Failure to follow these instructions may result in a hazardous condition, scalding or personal injury.

CAUTION Because the steam head and direct steam emission are very hot, locate the steam head(s) where incidental contact by the user with the steam head(s) or direct steam emission cannot occur. Do not locate the steam head(s) in any location where the steam emission zone is near a seat,bench or any space occupied by any persons. Failure to following these directions may result in a hazardous condition, scalding or personal injury.

CAUTION Linear Steam Heads are for residential use only. Do not use any Linear Steam Heads for commercial installations or with commercial steam generators (including Day Spas). Using Linear Steam Heads for commercial installations or installations with commercial steam generators may result in a leak within the wall cavity and cause problems associated with leaks, moisture and property damage from leaks. Using Linear Steam Heads for commercial installations or installations with commercial steam generators may result in a hazardous condition, scalding or personal injury.

CAUTION Do not use the Linear Steam Head with any steam system that includes equipment or devices not supplied by MrSteam, including but not limited to water softeners. Failure to follow these instructions may result in a leak within the wall cavity and cause problems associated with leaks, moisture and property damage from leaks. Failure to follow these instructions may result in a hazardous condition, scalding or personal injury.

CAUTION Only install the linear steam head in a horizontal orientation as shown in fig 3. Failure to follow these instructions may result in a leak within the wall cavity and cause problems associated with leaks, moisture and property damage from leaks. Failure to follow these instructions may result in a hazardous condition, scalding or personal injury.

CAUTION Insulate the linear steam head and piping as required to prevent elevated temperatures, including within the wall cavity. Do not locate the steam head or plumbing near any materials, including wiring, devices, or products that may be adversely affected by elevated temperatures. Check with the manufacturer of materials, wiring, devices, or products for suitability for operation at elevated temperatures. Use only insulation rated for 212F or higher steam applications. Failure to follow these instructions may result in the damage or failure of materials, wiring, devices, or products. Failure to follow these instructions may result in leaks, and cause problems associated with leaks, moisture and property damage from leaks. Failure to follow these instructions may result in a hazardous condition, scalding or personal injury.

CAUTION Steambath controls feature an integral or remote temperature sensor that senses room temperature. Install the linear steam head in a location where steam emission will not come in direct contact with the control or remote temperature sensor. Failure to follow these instructions may result in poor temperature control, a hazardous condition, scalding or personal injury.

CAUTION Only use the supplied high temperature silicone sealant as required to create a permanent moisture seal. Do not seal the steam head with grout or any other material. Failure to follow these instructions may result in leaks, and cause problems associated with leaks, moisture and property damage from leaks.

CAUTION The linear steam head must be installed by a qualified and licensed plumber. Failure to use a qualified and licensed plumber may result in a leak within the wall cavity and cause problems associated with leaks, moisture and property damage from leaks. Failure to follow these instructions may result in elevated temperatures, a hazardous condition, scalding or personal injury.

CAUTION Do not use black iron, galvanized, or plastic pipe for the steam line. Use only properly rated brass pipe or copper tubing in accordance with national and local plumbing codes. Using any piping material other than properly rated brass or copper piping may cause linear steam head damage and problems associated with leaks, moisture and property damage from leaks or steam.

CAUTION Plumb rigid copper tubing or brass pipe from the steam generator to the linear steam head. Plumbing must not form traps or valleys. Failure to follow these instructions may result in leaks, and cause problems associated with leaks, moisture and property damage from leaks. Failure to follow these instructions may result in a hazardous condition, scalding or personal injury.

CAUTION Do not modify or alter the linear steam head. Do not cover, block or insert any product that is not a MrSteam supplied linear steam head accessory with the linear steam head. Failure to follow these instructions may result in a leak within the wall cavity and cause problems associated with leaks, moisture and property damage from leaks. Failure to follow these instructions may result in a hazardous condition, scalding or personal injury.

CAUTION Do not disassemble the steam head. The steam head is shipped fully assembled and requires no additional assembly. Failure to follow these instructions may result in a leak within the wall cavity and cause problems associated with leaks, moisture and property damage from leaks.

CAUTION Before installing the linear steam head, read and follow the Installation and Operation Manual(s) provided with all system components (generator, controls, accessories...etc.). If the installation and operation manuals are not available go to www.mrsteam.com for an online copy, or contact MrSteam Customer or Technical Services at 800-767-8326 or 800-727-8326 for free copies. Failure to read and follow all the Installation and Operation Manuals may result in a leak within the wall cavity and cause problems associated with leaks, moisture and property damage from leaks. Failure to follow these instructions may result in inoperable system components, a hazardous condition, scalding or personal injury.

CAUTION Consult with the manufacturer of any non-heat resistant enclosures for elevated temperatures, steam, moisture compatibility or for suitability for use with steam. Failure to follow these instructions may result in the damage or failure of materials or products. Failure to follow these instructions may result in leaks, and cause problems associated with leaks, moisture and property damage from leaks. Failure to follow these instructions may result in a hazardous condition, scalding or personal injury.

CAUTION Do not install a Linear Steam Head in an acrylic/fiberglass tub or shower enclosure. Failure to follow these directions may cause problems associated with leaks, moisture and property damage from leaks. Failure to follow these instructions may result in elevated temperatures, a hazardous condition, scalding or personal injury.

CAUTION Do not locate the steam head where steam, elevated temperatures, moisture or water can contact any products, wall surfaces, materials, door seals, devices, electronics that are not designed for use with steam, elevated temperatures, moisture or water. Failure to follow these instructions may result in damage or improper operation of the products, wall surfaces, materials, door seals, devices or electronics.

CAUTION The optional diverter reduces the steam emission zone by redirecting steam up the wall above the steam head (see page 6). Installation of the diverter may result in the following:

- Changes to the steam distribution in the room
- Increase of the temperature of the wall and devices above the steam head
- Surface condensation patterns on the walls and ceiling

Always test the diverter to insure proper safety, installation and comfort.

NOTICE Carefully inspect the Linear Steamhead and packaging for shipping damage. In the event of shipping damage, please contact the carrier for claim information. Our customer service department can assist you with product replacement.

NOTICE Do not use abrasive cleansers or chemicals to clean the linear steam head. Use only water with mild soap and a non-abrasive sponge. The use of abrasive cleansers or chemicals will damage the finish on the linear steam head.

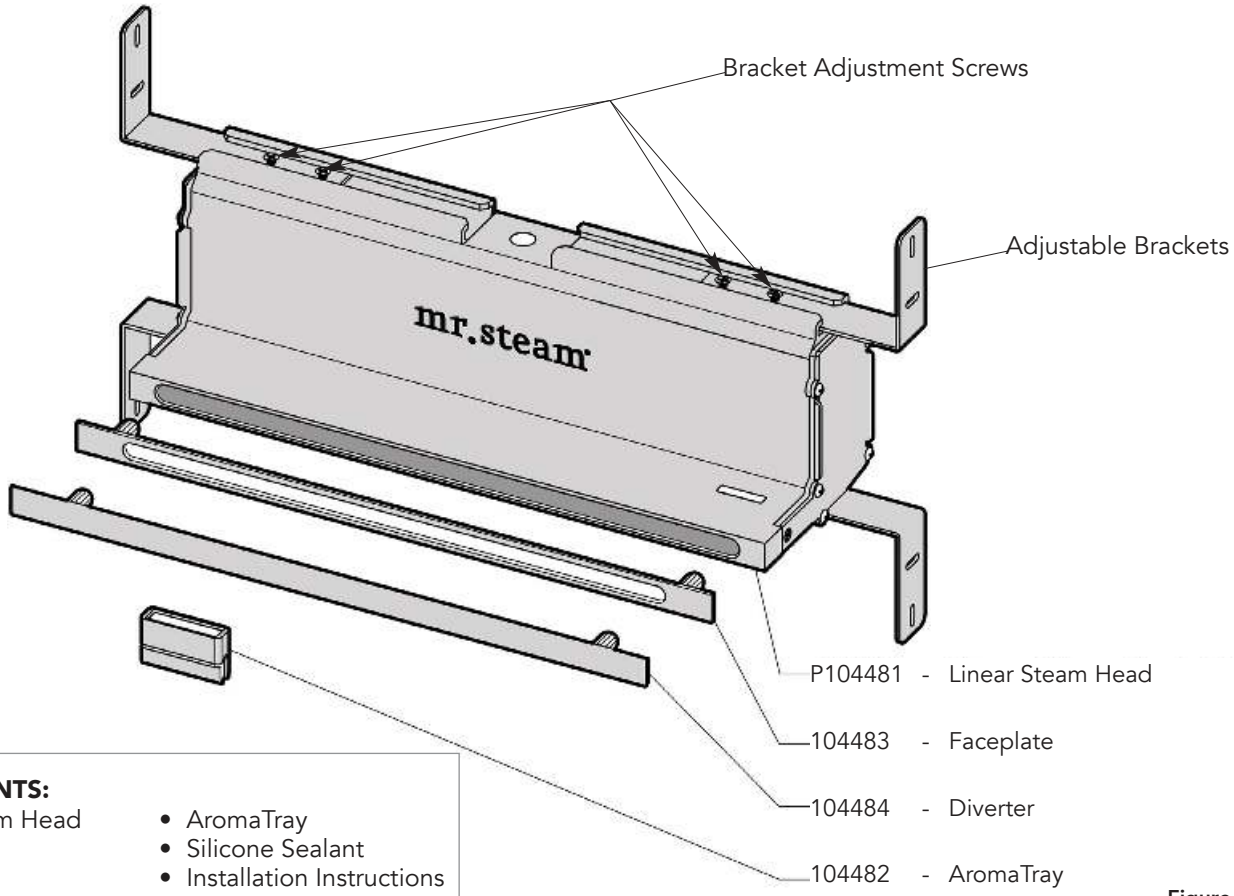

BOX CONTENTS:

- Linear Steam Head
- Faceplate
- Diverter
- AromaTray
- Silicone Sealant
- Installation Instructions

Figure 1

Dimensional Information

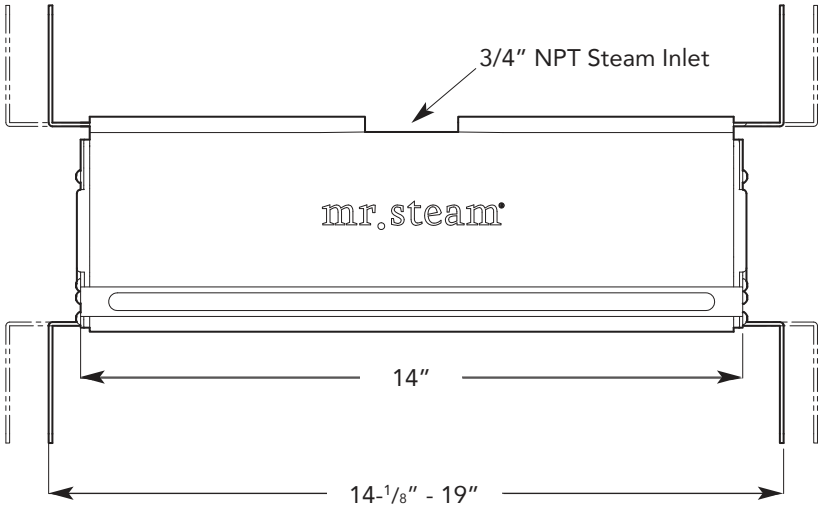

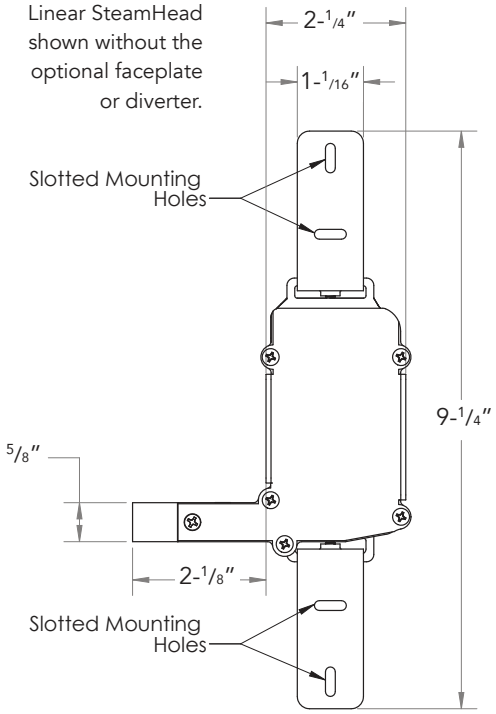

Figure 2

NOTE: ***Drawings are for illustrative purposes only.*** *Consult with qualified designer, architect or contractor for steam room construction.*

Steam Head Installation

STEP 1. Confirm proper stud spacing: The studs must have a minimum spacing of 14-1/8" and a maximum spacing 19". If the stud spacing is outside the required range then shim or otherwise reposition the studs as required.

CAUTION Installing the steam head between incorrectly spaced studs may result in damage to the steam head and result in a leak within the wall cavity and cause property damage.

STEP 2. Locate the steam head 6-12" above the finished floor. Locate the steam head where a steam bather can not come into contact with direct steam emissions. See page 6 for information on the steam emission zone.

CAUTION Steam is hot. Locate the steam head where a steam bather can not come into contact with direct steam emissions. Failure to follow these directions may result in a hazardous condition, scalding or personal injury.

STEP 3. Position the steam head between 2 properly spaced studs. Extend the adjustable brackets as required so the steam head fits snugly between two studs. Use a level to ensure the steam head is level (see Fig. 3). Tighten the eight bracket adjustment screws (supplied).

STEP 4. If the optional decorative faceplate is used, see the installation instructions for the optional faceplate on page 5. If the optional decorative faceplate is not used, position the steam head so that the steam head face will be flush with the finished wall face (see Fig. 4).

STEP 5. With the stem head properly positioned, with or without a decorative faceplate, provide eight screws as required to securely mount the steam head brackets to the studs.

CAUTION Failure to position the steam head face as instructed may result in improper steam head alignment, or a leak within the wall cavity and cause problems associated with leaks, moisture and property damage from leaks.

STEP 6. Plumb rigid copper tubing or brass pipe from the steam generator to the steam head. Use a ¾" NPT fitting appropriate for the steam piping used. Plumbing must not form traps or valleys. Thread sealant must be used as required to ensure a leak free joint between the piping and steam head.

STEP 7. Before continuing or closing the wall, test the installation, piping and steam head for leaks, traps, position, steam emission zone and for general proper installation.

CAUTION Failure to test the steam head installation may result in leaks, and cause problems associated with leaks, moisture and property damage from leaks.

Linear SteamHead shown without the optional faceplate or diverter.

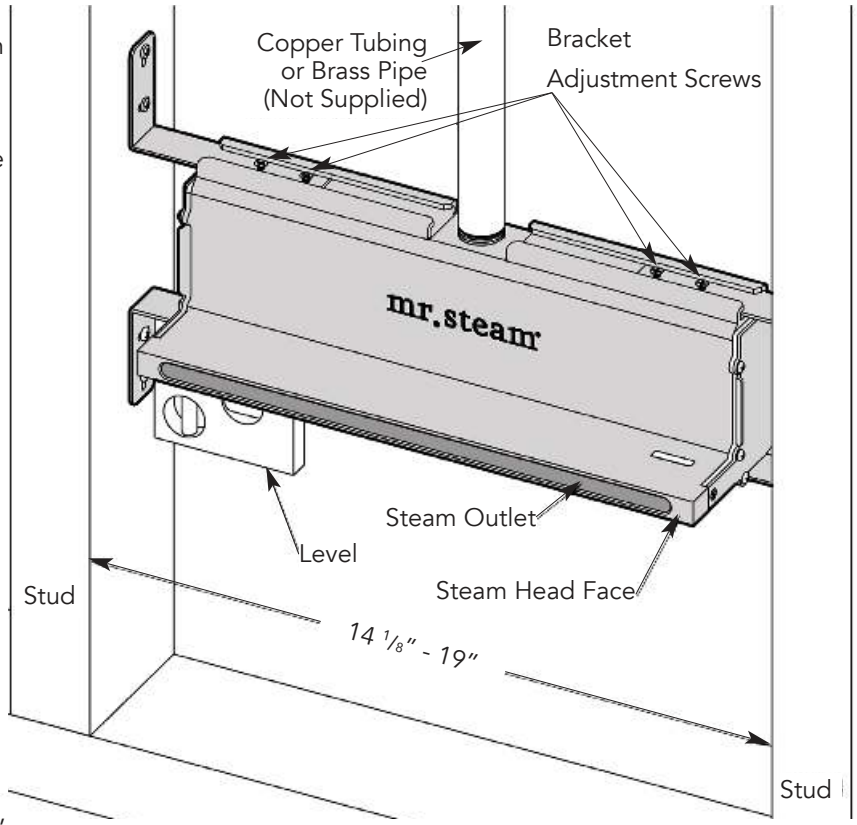

Figure 3

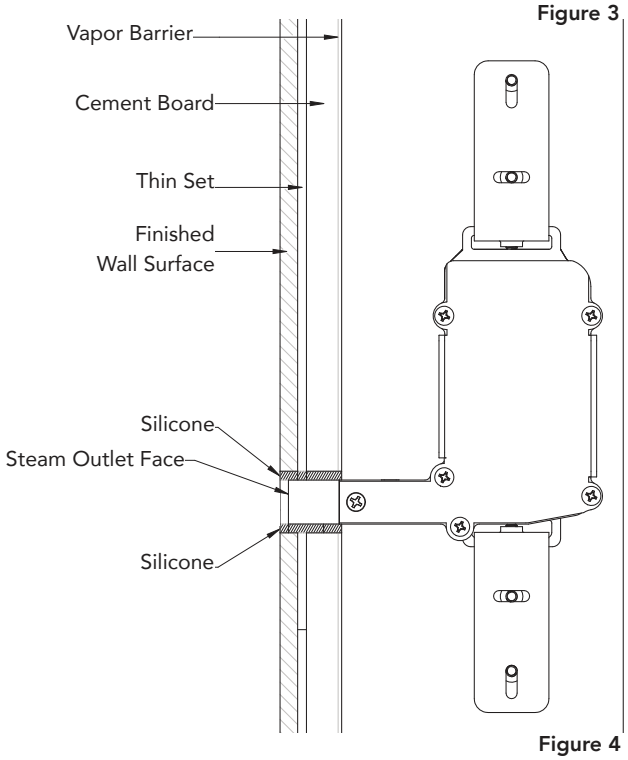

Figure 4

NOTE: ***Drawings are for illustrative purposes only.*** *Consult with qualified designer, architect or contractor for steam room construction.*

Optional Faceplate Installation

The steam head is supplied with an optional faceplate. It is not required for the functional operation of the steam head. The faceplate is a decorative accessory and is available in (8) finishes.

An optional Escutcheon (remodel plate) is available for purchase, it's larger than faceplate and is available in (8) finishes.

In **STEP 4**, instead of positioning the steam head face to be flush with the finished wall face, position the steam head so that the steam head face will be 1/8" recessed with the finished wall (see Fig. 4). This will provide clearance for the faceplate.

Apply silicone to the front of Linear Steam Head and firmly press the faceplate against the face of the steam head. Secure the faceplate as required until the silicone sets.

Return to **STEP 5** on page 4 to complete the installation.

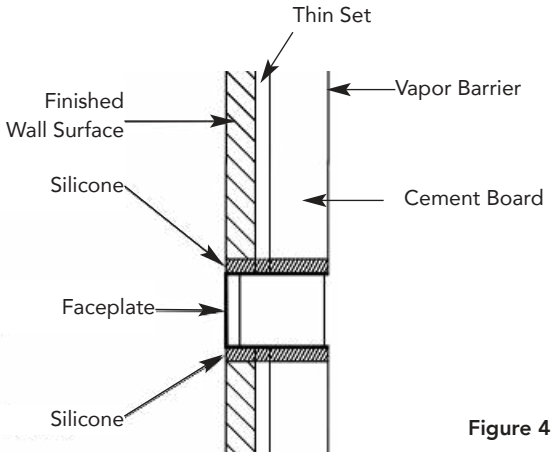

Figure 4

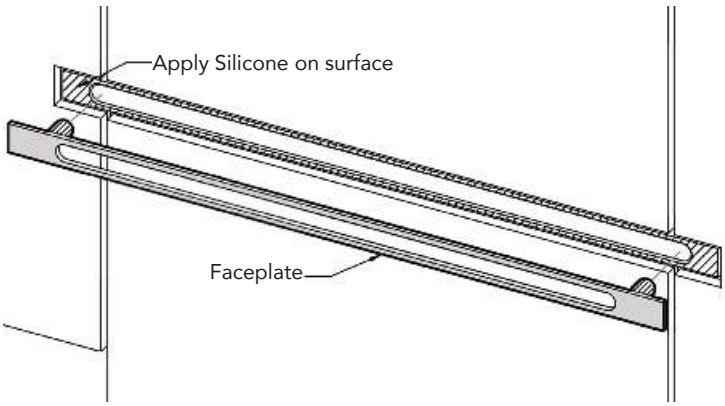

Figure 5

1. Determine the desired installation location of the control. The iSteam®, iTempo™ and iTempo/Plus™ controls are designed to be installed inside or out-side the steam room as a matter of personal prefer-ence. If the control is installed inside the steam room the control must be located:
2. 4-5 feet above the floor near the bather seating area

⚠ CAUTION

3. The control features an integral temperature sensor. Locate the control in a location representative of the desired steambathing temperatures.
   Do not locate the control above or near the steam head or direct steam emissions.
4. On a vertical wall

The control cable length is 30 feet. Insure that the control and/or steam generator are located accordingly. An optional 60 foot cable is available, PN 103990-60 for iTempo and PN 104117-60 for iSteam. Contact a MrSteam technical service representative if a 60 foot cable is required.

IMPORTANT NOTE: If the control is installed outside the steamroom a Remote Temperature Probe Part Number MSTS must be installed inside the steam room, depending on the control. Insure MrSteam steam generator is iSteam or iTempo compatible and has a serial number 900000 or higher. If iSteam is used with a generator having serial number less than 1174000, contact MrSteam technical support for an upgraded PC board.

See instructions for the MSTS Temperature Probe (located in the Control Installation Manual related to your specific control package) before rough-in or installation of control.

Steam Emission Zone

The Steam Emission Zone is the area in front of the steam head that contains dense, hot steam as it exits the steam head. Steam dissipates as it moves away from the steam head, and becomes less hot. The steam zone is the area where contact with steam presentees a scalding hazard. The steam head must be installed in a location to ensure that a steam bather will not be near the steam emission zone. The diverter reduces the steam emisson zone.

Steam Head without Optional Diverter

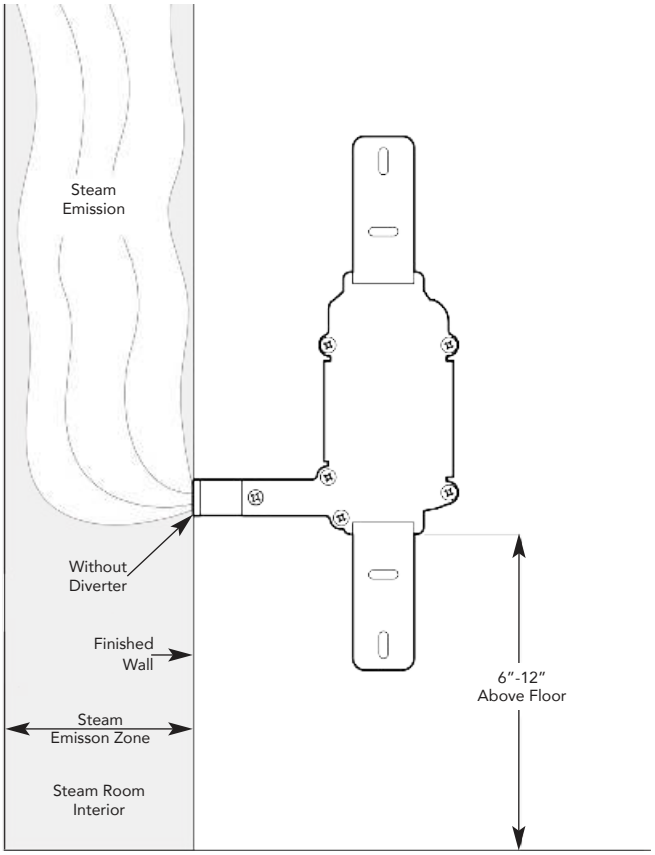

Steam Head with Optional Diverter

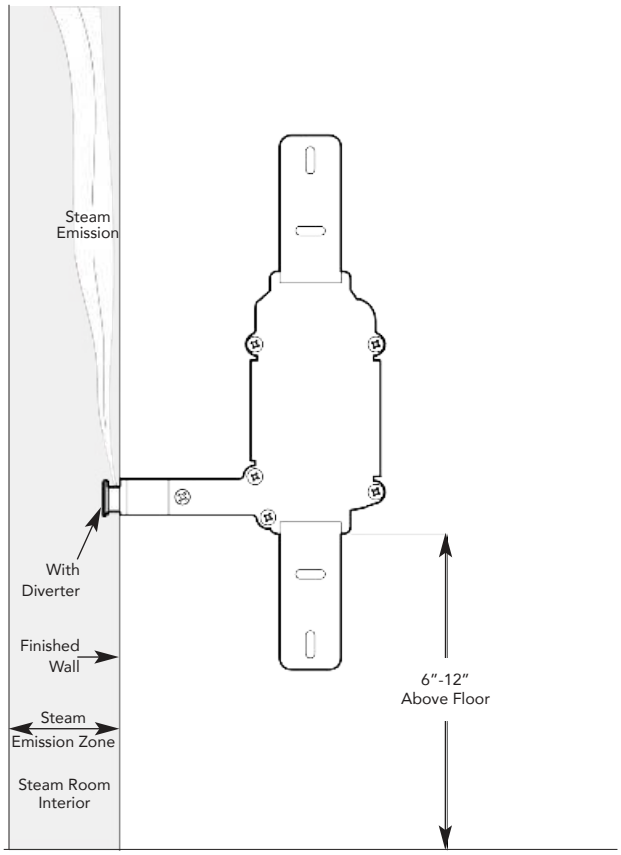

Generator Model	Minimum # of Linear Steam Heads	Steam Emission Zone with Diverter	Steam Emission Zone without Diverter
MS90-MS400 SAH3000-SAH6000	1	2”	10”
Super1-Super3	1	2”	24”
MX4-MX6	2	2”	24”

CAUTION The steam emission zone may vary with each installation. Always test the steam emission zone to insure safety.

NOTE: ***Drawings are for illustrative purposes only.*** *Consult with qualified designer, architect or contractor for steam room construction.*

Diverter

The Linear SteamHead is supplied with an optional steam diverter. The steam diverter is used to reduce the steam emission zone as required to avoid contact between a steam bather and direct steam emissions.

Supplied steam diverter does not have decorative finish. Steam diverters with decorative finish are available for purchase.

CAUTION Always use the diverter if any steam bather may come into contact with direct steam emissions. Contact MrSteam if a replacement diverter is required. Failure to use a diverter to reduce the steam emission zone as required to avoid contact between a steam bather and direct steam emissions may cause personal injury.

CAUTION Because direct steam is very hot, the diverter will be hot during the steam session, and will remain hot for a period of time after steam session. Never install, remove or adjust a diverter when the steam head is hot or if steam generator is turned on. Installing, removing or adjusting the diverter when the steam head is hot or if the steam generator is turned on may cause a burn hazard and personal injury.

CAUTION The optional diverter reduces the steam emission zone by redirecting steam up the wall above the steam head (see page 6). Installation of the diverter may result in the following:

- Changes to the steam distribution in the room
- Increase of the temperature of the wall and devices above the steam head
- Surface condensation patterns on the walls and ceiling

Always test the diverter to insure proper safety, installation and comfort.

STEP 1. Securely press the two rubber extensions into the opening of Linear Steam Head and push in firmly until the diverter is securely in place. (see Fig. 7).

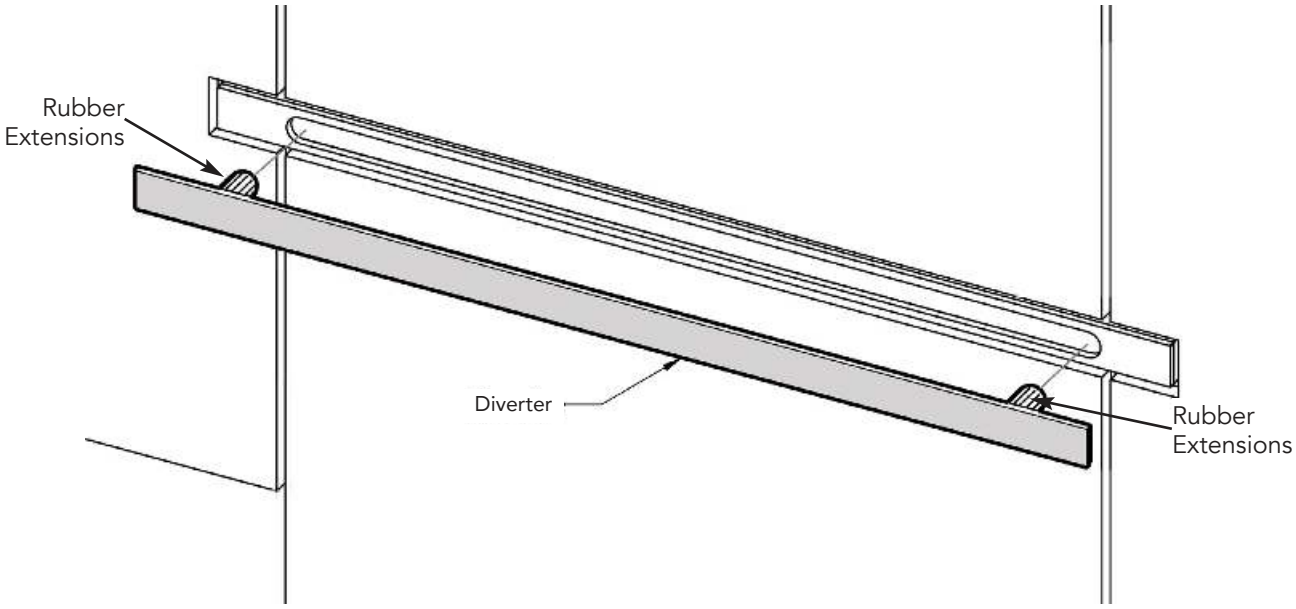

Figure 7

NOTE: ***Drawings are for illustrative purposes only.*** *Consult with qualified designer, architect or contractor for steam room construction.*

AromaTray

The AromaTray is for use with MrSteam Essential Oils. Place a few drops of Essential Oils in the AromaTray as shown to provide a fragrant steam bath experience. Read the instructions provided with the MrSteam Essential oils to insure a pleasant and safe aromatic steam bathing experience.

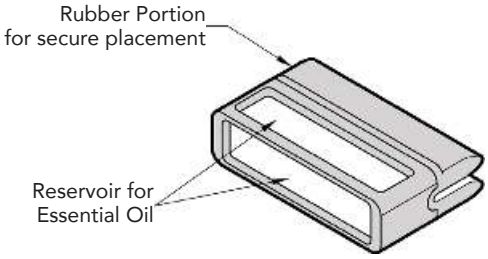

⚠ CAUTION Steam emissions, the linear steam head and AromaTray will all be hot during a steam bath session, and will remain hot for a period of time after the steam bath session. To avoid contact with the steam head and steam emissions, never install the AromaTray during a steam bath session or for a period of time after the steam bath session. Touching the AromaTray during a steam bath session, or for a period of time after the steam bath session, may result in burns, scalding or personal injury.

⚠ CAUTION Failure to first read the instructions provided with the MrSteam Essential oils may result in personal injury. If you do not have the instructions provided with the MrSteam Essential oils please call MrSteam customer or technical at 80076STEAM for a free copy, or go online at www.mrsteam.com.

AromaTray placement with the steam head or optional face plate

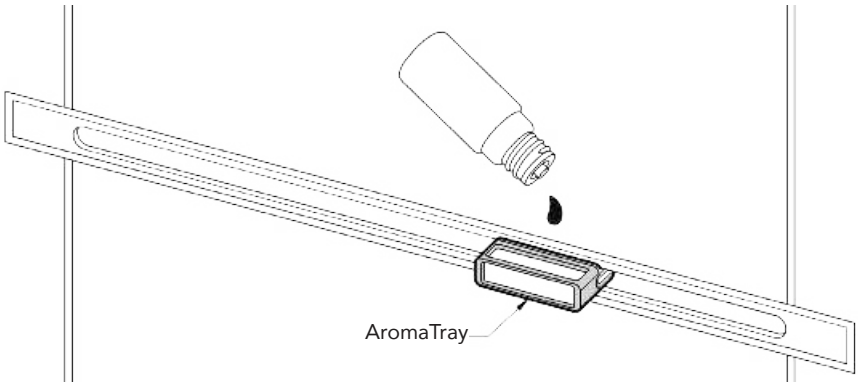

Firmly insert the rubber portion of the AromaTray into the steam outlet of Linear Steam Head with the oil reservoir facing up. Place a drop or two of AromaSteam essential oil in AromaTray. (see fig. 8)

Figure 8

AromaTray placement with the optional diverter

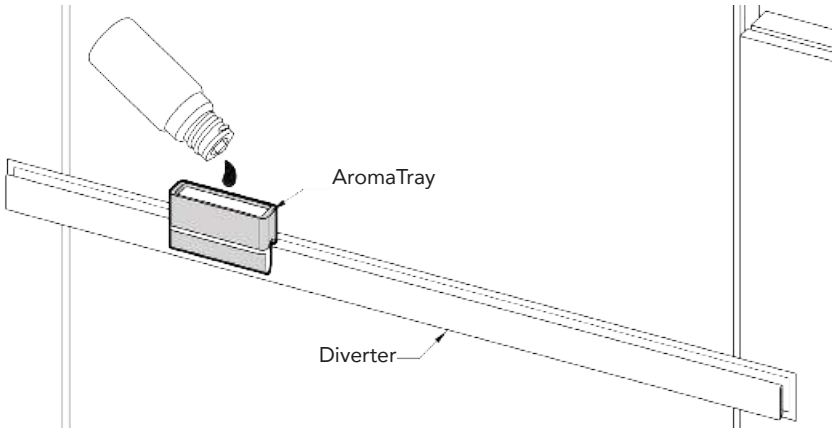

If a diverter is being used, firmly insert the rubber portion of the AromaTray onto the diverter with the oil reservoir facing up. Place a drop or two of AromaSteam essential oil in AromaTray. (see fig. 9)

Figure 9

NOTE: ***Drawings are for illustrative purposes only.*** *Consult with qualified designer, architect or contractor for steam room construction.*

Using MrSteam Essential Oils

Model 104480

Enjoy Mr.Steam essential oils by placing a drop or two, into your Mr.Steam AromaTray as shown in the illustration. Only use Mr.Steam essential oils in a Mr.Steam AromaTray. Contact a MrSteam customer or technical Service representative for essential oil Manufacturer Safety Data Sheets (MSDS).

⚠ CAUTION Start with one drop to gauge strength and suitability. Limit to a maximum of a few drops during a steambathing session.

⚠ CAUTION Use essential oils with caution. Essential oils are for external use only. Keep out of reach of children. Essential oils are highly concentrated and are potent substances and should not be applied directly to the skin as they can be irritants. Use essential oils with caution.

⚠ CAUTION Place the drops into the Mr.Steam AromaTray recess prior to turning on the steambath. Do not place drops in a hot steamhead as serious injury can result if you do not follow this warning.

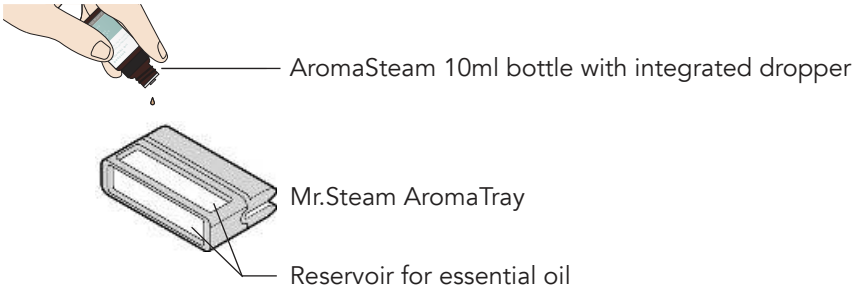

⚠ CAUTION Some people may find that the aroma makes them dizzy. In the event of dizziness, the user should exit the steambath immediately and breathe in fresh air. If skin irritation occurs stop using the oils right away. Remove any excess oil by washing in mild soap and water

⚠ CAUTION In case of contact with eyes, rinse immediately with plenty of water and seek medical advice. If ingested, rinse mouth with water. Administer water or milk to dilute. Contact a physician immediately. Tightly close containers when storing oils. Keep away from sources of ignition.

Warranty

To view or download the MrSteam Residential Generator Warranty and register your product go to: **blog.mrsteam.com/wr**

For Installation assistance please call Customer or Technical support:
East Coast 1-800-767-8326 West Coast 1-800-727-8326
To view an installation video please go to: www.mrsteam.com. This video is for added visual assistance only.
Do not install the Linear Steam Head using the video. Use only these installation instructions for a safe and problem free installation.

NOTE: ***Drawings are for illustrative purposes only.*** *Consult with qualified designer, architect or contractor for steam room construction.*

Model 104480

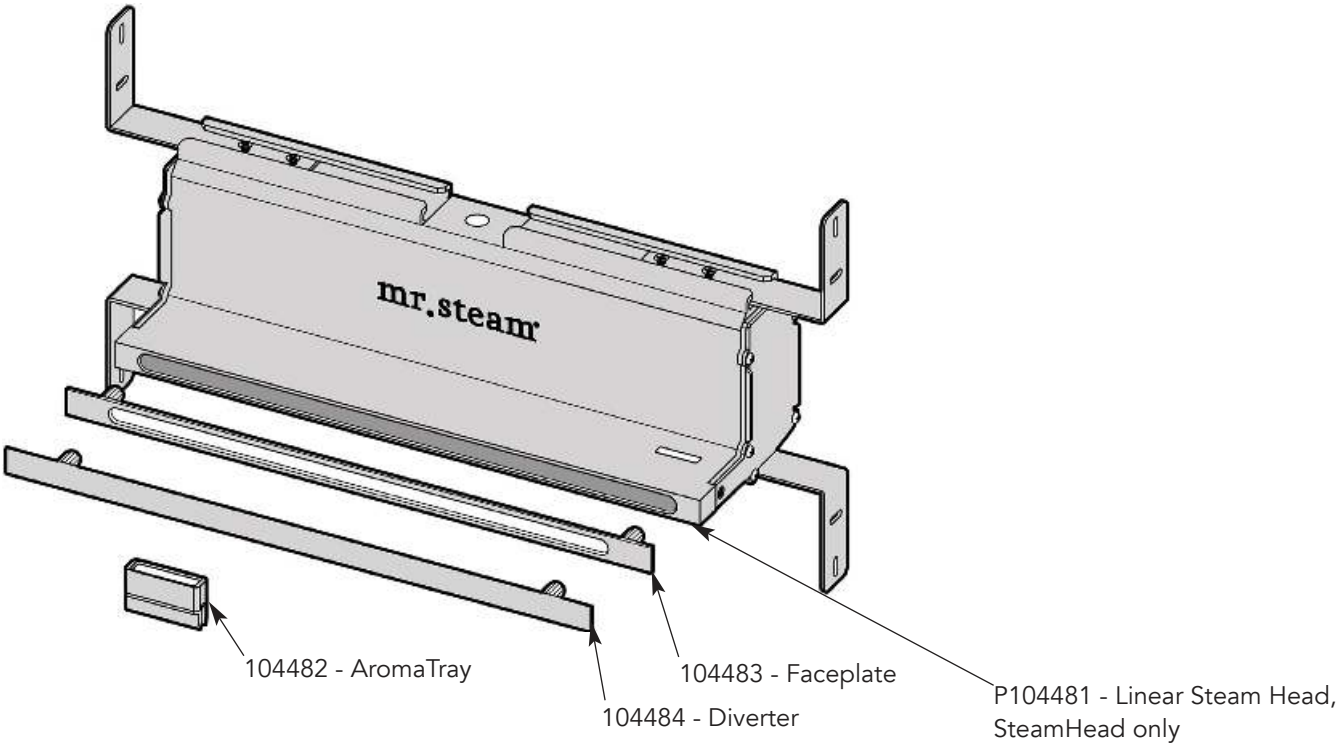

Replacement Parts

Part Number	Description
104482BB	AromaTray for LSH, Brush Bronze
104482BN	AromaTray for LSH, Brush Nickel
104482MB	AromaTray for LSH, Matte Black
104482ORB	AromaTray for LSH, Oil Rubbed Bronze
104482PB	AromaTray for LSH, Polish Brass
104482PC	AromaTray for LSH, Polish Chrome
104482PN	AromaTray for LSH, Polish Nickel
104482SB	AromaTray for LSH, Satin Brass
104483BB	LSH Faceplate Brush Bronze
104483BN	LSH Faceplate Brush Nickel
104483MB	LSH Faceplate Matte Black
104483ORB	LSH Faceplate Oil Rubbed Bronze
104483PB	LSH Faceplate Polish Brass
104483PC	LSH Faceplate Polish Chrome
104483PN	LSH Faceplate Polish Nickel
104483SB	LSH Faceplate Satin Brass

Optional Accessories

Part Number	Description
104485BB	LSH Escutcheon Brush Bronze
104485BN	LSH Escutcheon Brush Nickel
104485MB	LSH Escutcheon Matte Black
104485ORB	LSH Escutcheon Oil Rubbed Bronze
104485PB	LSH Escutcheon Polish Brass
104485PC	LSH Escutcheon Polish Chrome
104485PN	LSH Escutcheon Polish Nickel
104485SB	LSH Escutcheon Satin Brass
104486BB	LSH Diverter Brush Bronze
104486BN	LSH Diverter Brush Nickel
104486MB	LSH Diverter on Matte Black
104486ORB	LSH Diverter Oil Rubbed Bronze
104486PB	LSH Diverter Polish Brass
104486PC	LSH Diverter Polish Chrome
104486PN	LSH Diverter Polish Nickel
104486SB	LSH Diverter Satin Brass

mr.steam® hello@mrsteam.com | www.mrsteam.com

43-20 34th Street, Long Island City, NY 11101 TEL: 1 800 76 STEAM I 9410 S. La Cienega Blvd. Inglewood CA 90301 TEL: 1 800 72 STEAM

2020 © MrSteam and des., A Lifetime of Pleasure, AirTempo, AromaFlo, AudioWizard, AutoFlush, AutoSteam, Butler Package, ChromaSteam, Clean Steam...Every Time, Club Therapy, CT Day Spa, Digital 1, Express Steam, Feel Good Inc., From Bathroom to Spa, HomeWizard, iButler, iGenie, iSpa Package, iSteam, iTempo, iTempo/Plus, Linear Steamhead, Making Wellness a Way of Life, Music Therapy, My Steam, SmartSizing, Spa Package, Steam Genie, Steam on Demand, Steam in a Box, Steam@Home, SteamStart, SteamTherapy, Tala, Tala Bath & Body, Tempo, The Intelligent Steambath, Valet Package, and Virtual Spa System are registered trademarks of MrSteam.

PUR103936 Rev 05/22

INSTALLATION INSTRUCTIONS

Model Audio XBK & Audio XWH

PACKAGE CONTENTS:

1x AudioX [pair of speakers]
1x Installation Instructions
2x Templates
1x power cable
1x audio cable

SPEAKER RATINGS:

60 watt peak/25 watt RMS/8 ohm impedance/5" depth
Operating Temperature 0 °C – 60 °C (32 °F – 140 °F)

SUPPLY RATING:

100-240 VAC, 50/60 Hz, 1.0 A max.

1. Cut a 6 9⁄16" x 6 9⁄16" (167 mm x 167 mm) hole to mount each speaker. The maximum distance between each speaker is 15 feet.

CAUTION All audio wiring shall be installed in accordance with National Electric Code and local electrical codes.

2. Connect power supply and audio cable to the primary AudioX speaker and to wall outlet.

3. Connect to the speaker and test speakers before securing to ceiling.

4. Remove the front grill of the AudioX by gently rotating out any two opposite brackets by hand as shown in the installed view and pressing them down to pop the grill off. Return the brackets to the original position before installing AudioX.

CAUTION Failure to engage mounting brackets correctly or improper installation may result in a falling object hazard.

5. Apply a bead of silicone RTV (not supplied) around the edge of the AudioX as shown in the diagram as required to obtain a watertight seal.

6. Fit the AudioX into the speaker-mounting hole.

7. Secure the AudioX in place using the integral mounting brackets. The mounting brackets will rotate out and tighten when the 4 large screws are turned clockwise.

NOTE: DO NOT OVER TIGHTEN SCREWS.

8. Gently tug on speakers to ensure they are secure in the ceiling.

9. Carefully replace the AudioX grills by pressing them in place.

10. Let the silicone cure per manufacture's instructions before using steam room.

11. Connect the secondary AudioX speaker to the other end of the audio cable and repeat steps 4-10.

IMPORTANT: Do not place AudioX in contact with direct water or steam emission.

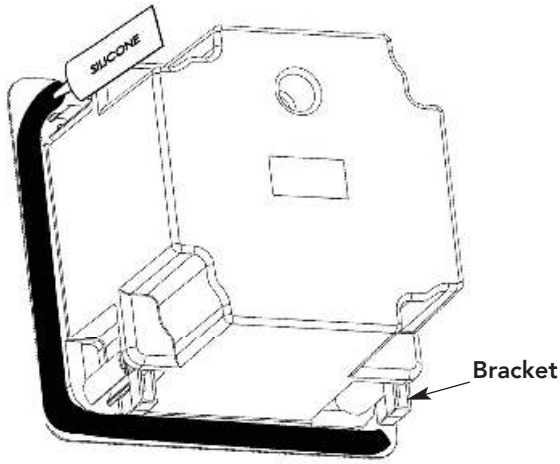

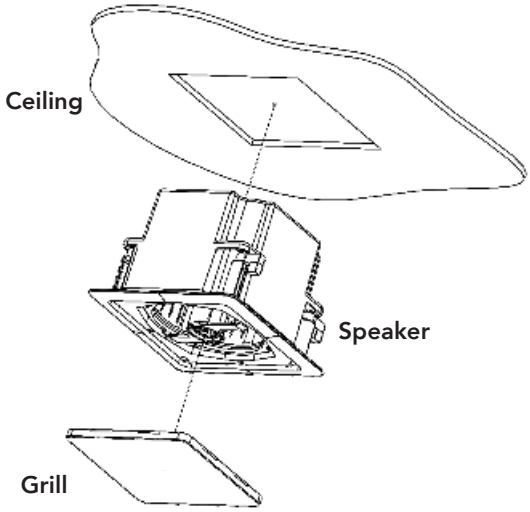

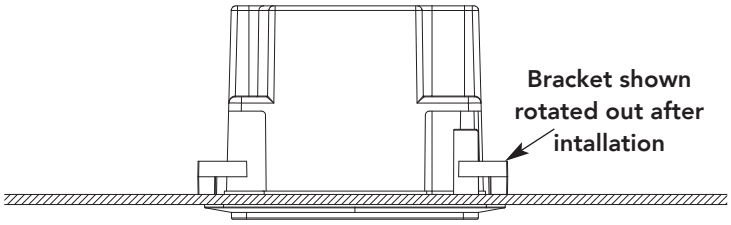

Connecting to AudioX

1. On your iSteamX, go the system settings page and select bluetooth
2. Tap pair new device and look for MrSteam
3. **When prompted, enter the default password: 1234**

mr.steam hello@mrsteam.com www.mrsteam.com
43-20 34th Street, Long Island City, NY 11101 TEL: 1 800 76 STEAM
9410 s. La Cienega Blvd. Inglewood, CA 90301 TEL: 1 800 72 STEAM

PUR 100581 2.24

WIRING DIAGRAM

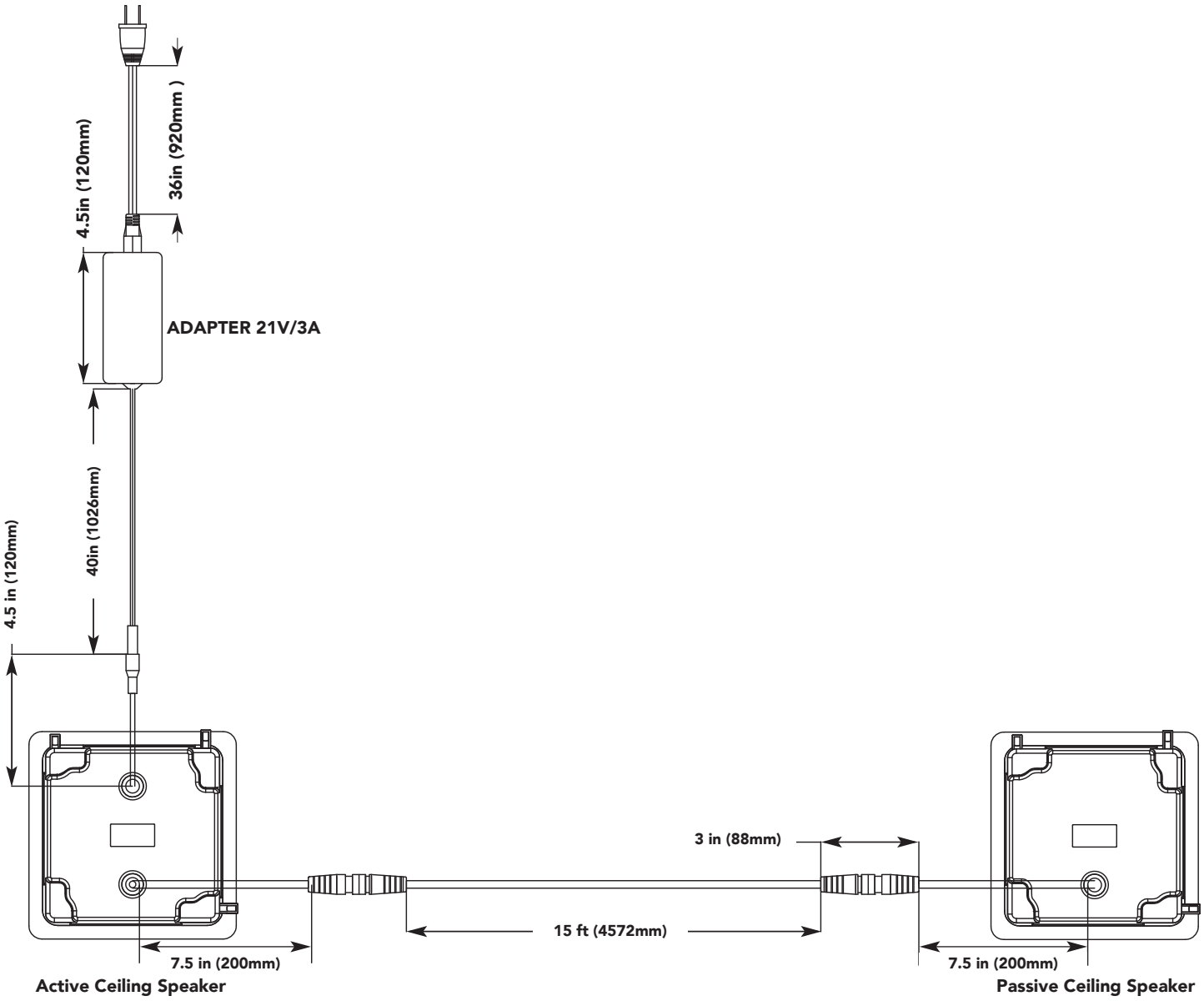

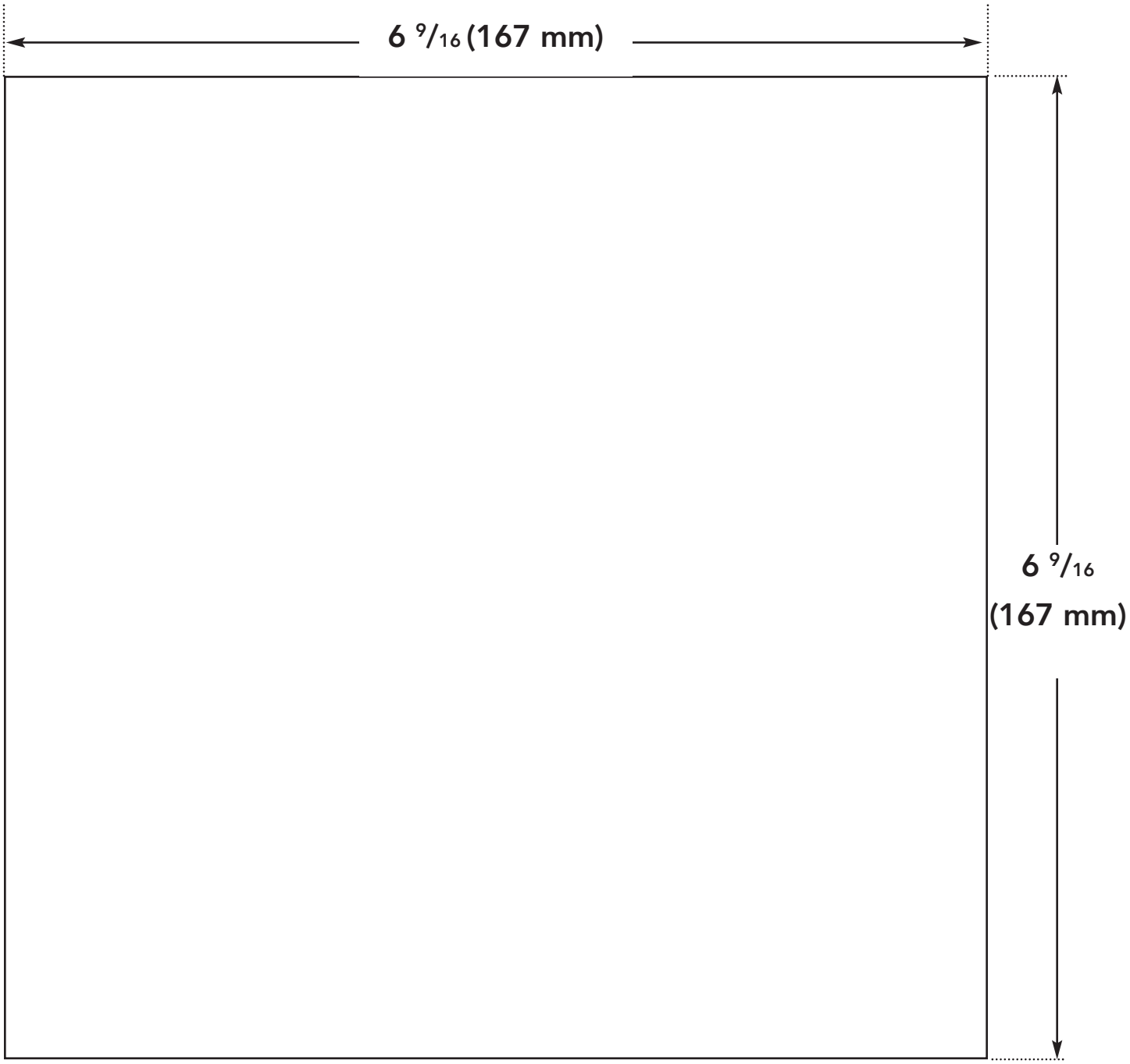

WARRANTY: To view or download the MrSteam Controls & Accessories Warranty and register your product go to: **blog.mrsteam.com/wr**

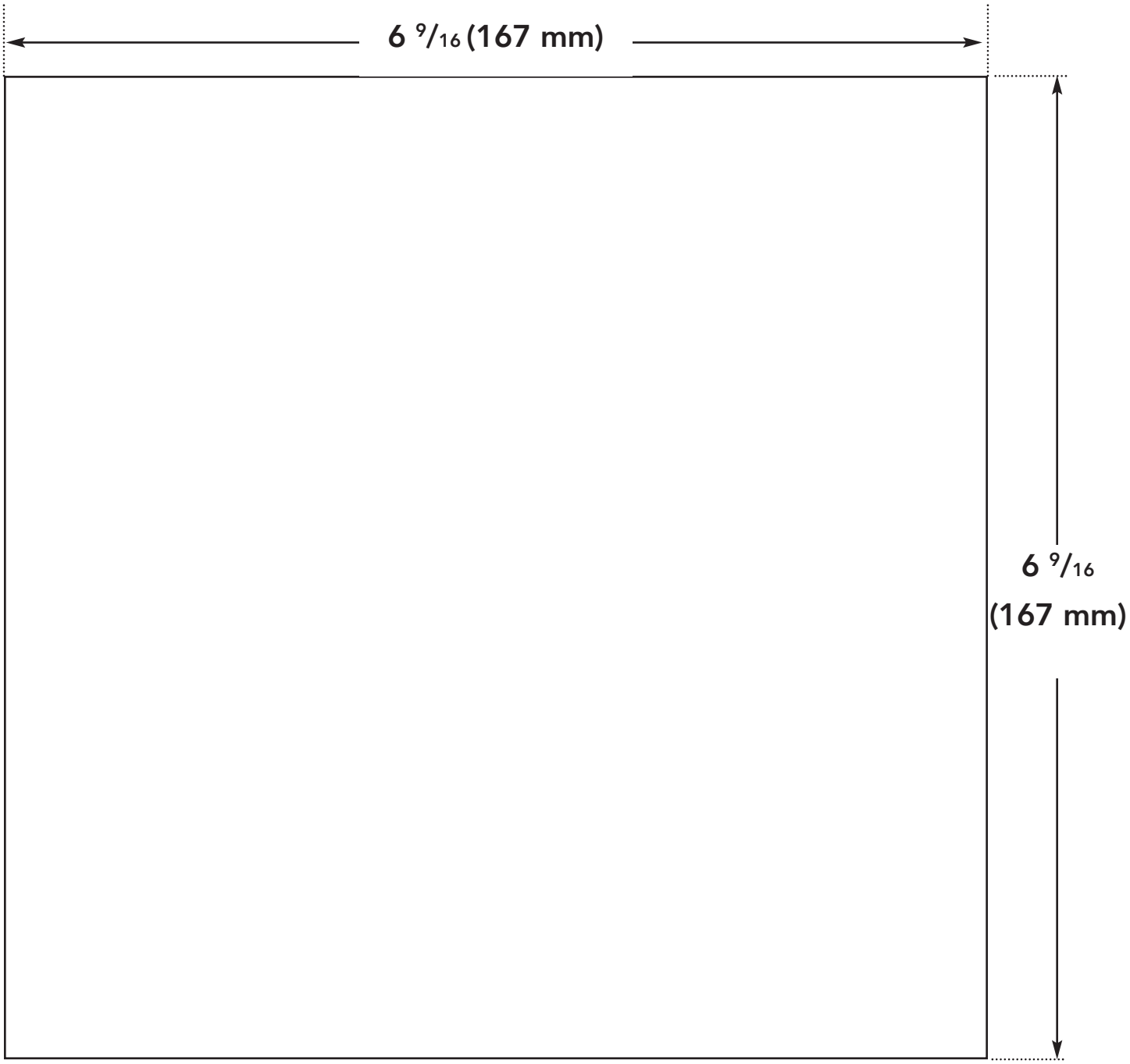

WARRANTY: To view or download the MrSteam Controls & Accessories Warranty and register your product go to: **blog.mrsteam.com/wr**

WARNING

Model Audio XBK & Audio XWH

FCC Warning:

Any Changes or modifications not expressly approved by the party responsible for compliance could void the user's authority to operate the equipment.

This device complies with part 15 of the FCC Rules. Operation is subject to the following two conditions:

1. This device may not cause harmful interference, and
2. this device must accept any interference received, including interference that may cause undesired operation.

Note: This equipment has been tested and found to comply with the limits for a Class B digital device, pursuant to part 15 of the FCC Rules. These limits are designed to provide reasonable protection against harmful interference in a residential installation. This equipment generates uses and can radiate radio frequency energy and, if not installed and used in accordance with the instructions, may cause harmful interference to radio communications. However, there is no guarantee that interference will not occur in a particular installation. If this equipment does cause harmful interference to radio or television reception, which can be determined by turning the equipment off and on, the user is encouraged to try to correct the interference by one or more of the following measures:

- Reorient or relocate the receiving antenna.
- Increase the separation between the equipment and receiver.
- Connect the equipment into an outlet on a circuit different from that to which the receiver is connected.
- Consult the dealer or an experienced radio/TV technician for help.

This transmitter must not be co-located or operating in conjunction with any other antenna or transmitter.

This equipment complies with FCC radiation exposure limits set forth for an uncontrolled environment. This equipment should be installed and operated with minimum distance 20cm between the radiator & your body.

ISED Warning:

This device contains license-exempt transmitter(s)/receiver(s) that comply with Innovation, Science and Economic Development Canada's license-exempt RSS(s). Operation is subject to the following two conditions:

1. This device may not cause interference.
2. This device must accept any interference, including interference that may cause undesired operation of the device.

L'émetteur/récepteur exempt de licence contenu dans le présent appareil est conforme aux deux conditions suivantes:

1. L'appareil ne doit pas produire de brouillage;
2. L'appareil doit accepter tout brouillage radioélectrique subi, même si le brouillage est susceptible d'en compromettre le fonctionnement.

This transmitter must not be co-located or operating in conjunction with any other antenna or transmitter. Cet émetteur ne doit pas être colocalisé ou fonctionner en conjonction avec une autre antenne ou un autre émetteur.

The device meets the exemption from the routine evaluation limits in section 2.5 of RSS-102 and compliance with RSS-102 RF exposure, users can obtain Canadian information on RF exposure and compliance. This equipment should be installed and operated with a minimum distance of 20 centimeters between the radiator and your body.

Le dispositif rencontre l'exemption des limites courantes d'évaluation dans la section 2.5 de RSS 102 etla conformité à l'exposition de RSS-102 rf, utilisateurs peut obtenir l'information canadienne surl'exposition et la conformité de rf.

Cet émetteur ne doit pas être Co-placé ou ne fonctionnant en même temps qu'aucune autre antenne ouémetteur. Cet

mr.steam®

Feel Good Inc.®

www.mrsteam.com

Products, information and specifications are subject to change without notice.
Please call Technical Support at 1.800.76.STEAM (East Coast) or 1.800.72.STEAM (West Coast) for more information.

mr.steam® | hello@mrsteam.com | www.mrsteam.com

43-20 34th Street, Long Island City, NY 11101 TEL: 1 800 76 STEAM I 9410 S. La Cienega Blvd. Inglewood CA 90301 TEL: 1 800 72 STEAM

2020 © MrSteam and des., A Lifetime of Pleasure, AirTempo, AromaFlo, AudioWizard, AutoFlush, AutoSteam, Butler Package, ChromaSteam, Clean Steam...Every Time, Club Therapy, CT Day Spa, Digital 1, Express Steam, Feel Good Inc., From Bathroom to Spa, HomeWizard, iButler, iGenie, iSpa Package, iSteam, iTempo, iTempo/Plus, Linear Steamhead, Making Wellness a Way of Life, Music Therapy, My Steam, SmartSizing, Spa Package, Steam Genie, Steam on Demand, Steam in a Box, Steam@Home, SteamStart, SteamTherapy, MrSteam, Tala, Tala Bath & Body, Tempo, The Intelligent Steambath, Valet Package, and Virtual Spa System are registered trademarks of MrSteam.

PUR 100581 Rev 3.24

IMPORTANT: LEAVE THIS MANUAL WITH THE OWNER/OPERATOR OR ATTENDANT

Installation, Operation, and Maintenance Manual

ChromaSteam® X

mr.steam® | Feel Good Inc.®

IMPORTANT SAFETY INFORMATION

READ ME FIRST:

1. Read and follow all instructions within this technical manual.
2. Heed all warnings, cautions, notices, and important notes.
3. Save this technical manual and leave with the homeowner.

ABOUT WARNINGS, CAUTIONS, NOTICES, AND IMPORTANT NOTES:

As you follow the instructions in this technical manual, you will see four types of callouts: **WARNINGS, CAUTIONS, NOTICES**, and **IMPORTANT NOTES.** This blocked information is important for the safe and efficient installation, operation, and maintenance of the ChromaSteamX. These callouts are described as follows:

WARNING Indicates a potentially hazardous situation, which, if not avoided, may result in death or serious injury.

CAUTION Indicates a potentially hazardous situation, which, if not avoided, may result in minor or moderate injury.

NOTICE Indicates a situation, which, if not avoided, may result in property damage.

IMPORTANT NOTE: Indicates information that is especially relevant to a problem-free installation.

SAFETY INSTRUCTIONS:

To prevent personal injury and/or product damage, please read the following important safety instructions carefully before installing the ChromaSteamX:

- Do not install the ChromaSteamX controller near any heat sources.
- Clearance and minimum distance between the various components of the ChromaSteamX and the surrounding structure are not specified as long as they are sufficient so that the ambient temperature around the apparatus does not exceed 140 °F (60 °C).
- Do not defeat the safety purpose of the polarized and/or grounding type plug. A polarized plug has two blades, with one wider than the other. A grounding type plug has two blades and a third grounding prong. The wide blade or the third prong are provided for your safety. If the provided plug does not fit into your outlet, consult an electrician for replacement of the obsolete outlet.
- Protect the power cords from being walked on or pinched, particularly at plugs, convenience receptacles, and at the point where the cords exit from the apparatus.
- Only use attachments/accessories specified by the manufacturer.
- All servicing to be performed by qualified service personnel. Servicing is required when the ChromaSteamX is damaged in any way, including when the power-supply cord or plug is damaged, liquid is spilled into or objects fall into the controller, the controller is exposed to rain or moisture, the fixture or controller does not operate normally, or the fixture or controller is dropped.
- Do not disassemble or alter the ChromaSteamX fixture or controller in any way.
- Clean the ChromaSteamX fixture and controller with a dry cloth only. Beware of the application of some products commonly used against corrosion (such as WD-40® family products), as some industrial oils can have negative chemical reactions and damage the housing materials of the ChromaSteamX fixture and controller. Any other materials that may come in contact with the ChromaSteamX must be carefully evaluated under end-use conditions for compatibility.

WARNING These instructions are for use by qualified service personnel only. To reduce the risk of electric shock, do not perform any servicing, other than that contained in these instructions.

NOTE: All information in this technical manual is based on the latest product information available at the time of publication. MrSteam reserves the right to make changes at any time without notice.

TABLE OF CONTENTS:

INSTALLER INSTRUCTIONS

General Information

Box Contents 3

General Installation 4

Installing the ChromaSteamX Control Box

Control Box Dimensions 5

Locating the Control Box 5

Installing the Control Box 5

Installing the ChromaSteamX Fixture

Fixture Dimensions. 6

Installing the Junction Box 7-8

Installing the Fixture 9

Connecting the ChromaSteamX Fixture to the Control Box 10

Connecting the ChromaSteamX Control Box to the iSteamX Hub 11

Connecting The ChromsteamX to Power 12

ChromaSteamX Specifications 12

HOMEOWNER/END-USER INSTRUCTIONS

About ChromaSteamX & Warranty 13

Operating ChromaSteamX 14

IMPORTANT NOTE:

The ChromaSteamX fixture has been designed for use in wet locations. ChromaSteamX is not designed to be submerged.

INSTALLER INSTRUCTIONS

General Information

ChromaSteamX Box Contents:

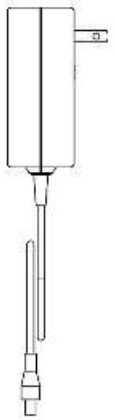

Power Suppy

Junction Box

ChromaSteamX Fixture

Led Power (30 Ft) Cable

Control Box

Tube of Silicone

Accessory Communication Cable (30Ft)

ChromaSteamX Duo Box Contents:

Power Suppy

(2) Junction Box

(2) ChromaSteamX Fixture

(2) Led Power (30 Ft) Cable

Control Box

(2) Tube of Silicone

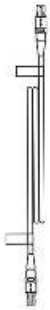

Accessory Communication Cable (30Ft)

All drawings are for illustrative purposes only.

General Installation

Figure 3 shows how the ChromaSteamX fixture and control box interconnect with each other, and with the steam generator and iSteamX.

IMPORTANT NOTES:

- The included ChromaSteamX accessory communication cable and LED power cable are each 30 ft long. Ensure that the ChromaSteamX fixture and control box are located accordingly. Contact MrSteam to purchase optional 60-foot cables.
- ChromaSteamX Duo comes with an additional LED cluster and LED power cabel. The LED power cable plugs into the control box.
- ChromaSteamX only works with iSteamX.

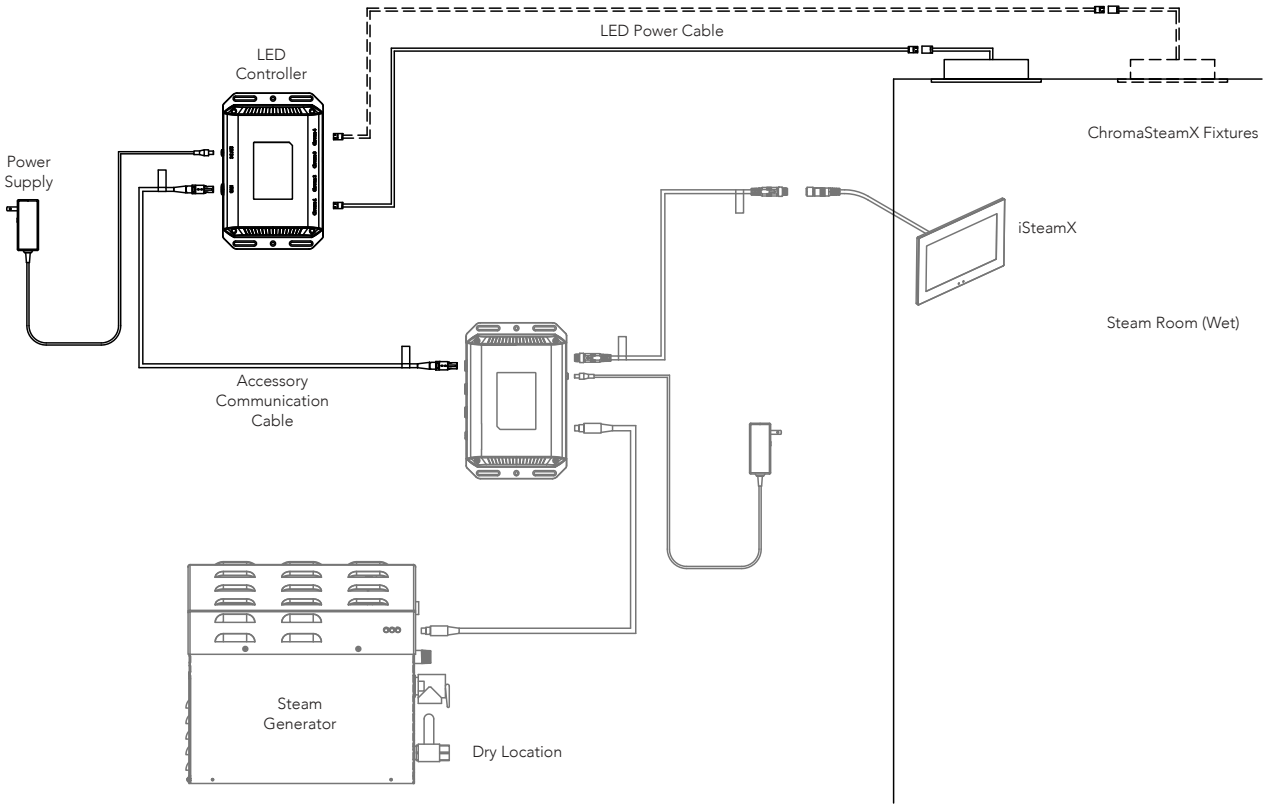

Figure 3

IMPORTANT NOTE: A Maximum of 4LED Clusters can be plugged into a ChromaSteamX centrol box

All drawings are for illustrative purposes only.

Installing the ChromaSteamX Control Box

Control Box Dimensions

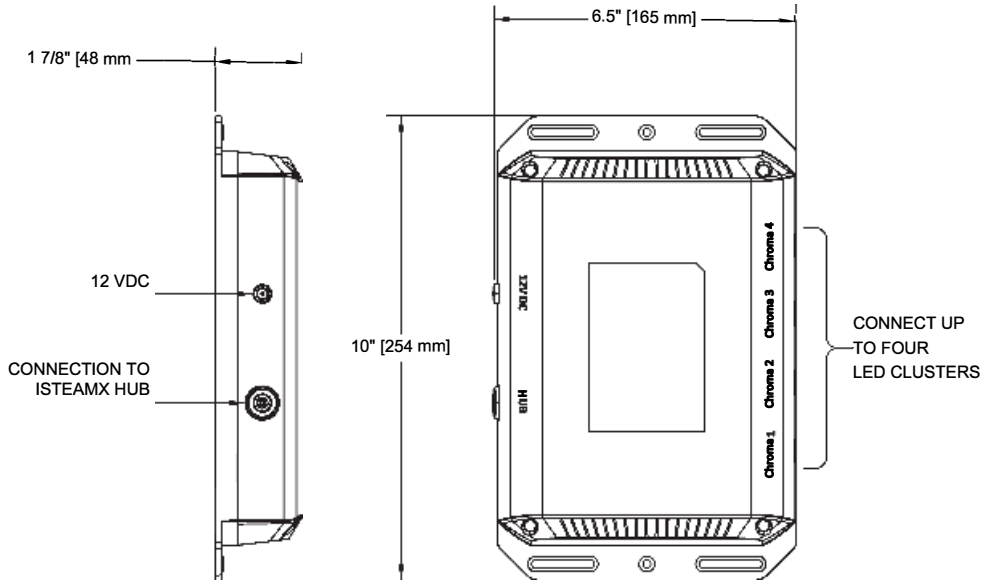

Figure 4

NOTICE

- To prevent product or property damage, do not expose control box to temperatures above 140 °F (60 °C). Do not locate control box in an attic or any location where ambient temperatures may exceed 140 °F (60 °C).
- Do not locate control box next to heat sources, such as hot air registers, air conditioner condensers, etc.
- The control box powers the ChromaSteamX fixture with 5VDC.

Locating the Control Box

Determine the desired location of the ChromaSteamX control box outside the steam room in a dry location.

WARNING **Shock hazard.** Do not place the control box in a location where it can get wet.

IMPORTANT NOTES:

- The included ChromaSteamX accessory communication cable and LED power cab le are each 30 ft long. Ensure that the ChromaSteamX fixture and control box are located accordingly. Contact MrSteam to purchase optional 60-foot cable.
- ChromaSteamX Duo comes with an additional LED cluster and LED power cabel. The LED power cable plugs into the control box.
- ChromaSteamX only works with iSteamX.

Installing the Control Box

Using screws affix the control box to a stable surface (e.g., stud) using the mounting holes on either side of the control box
(Figure 4). The control box can be mounted in any orientation.

NOTICE

- To prevent product or property damage, do not expose control box to temperatures above 140 °F (60 °C). Do not locate control box in an attic or any location where ambient temperatures may exceed 140 °F (60 °C).
- In the event the control box requires servicing, ensure that it is installed in an accessible location.

IMPORTANT NOTE: The following materials (not included) are recommended to install the ChromaSteamX control box:

- Two #10 screws of appropriate length with round, truss, or pan heads.

All drawings are for illustrative purposes only.

Installing the ChromaSteamX Fixture

Fixture Dimensions

Figure 5

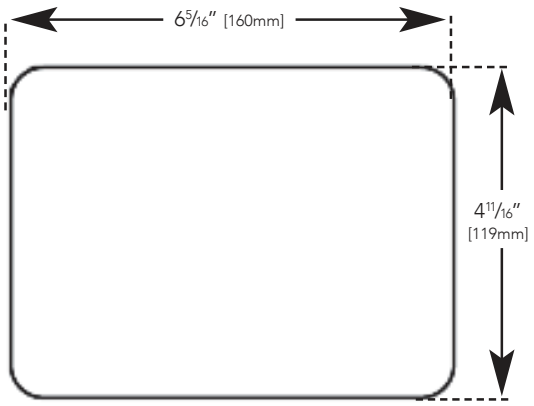

Figure 6

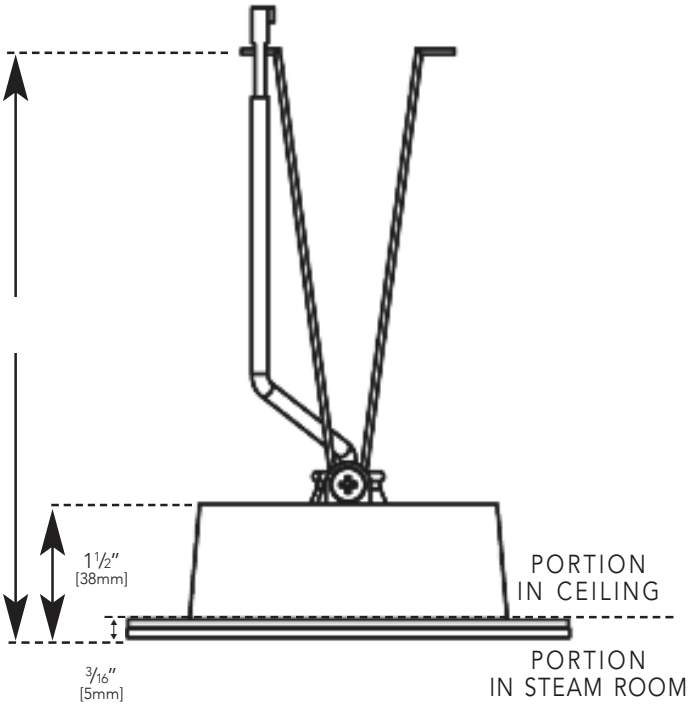

All drawings are for illustrative purposes only.

Installing the Junction Box

Functions of the Junction Box:

1. Allows precisely location of the ChromaSteamX fixture within the steam room ceiling.
2. Provides a secure and easily identifiable holder for the control cable while the steam room is being constructed.
3. Works with the ChromaSteamX fixture's retention springs to prevent the fixture from falling and injuring a person in the enclosure.

Locating the Fixture:

1. Locate the fixture for optimal lighting within the enclosure.
2. ChromaSteamX is for mood lighting only. Not to be used as a primary lighting source.
3. Do not locate the fixture in direct shower spray, near direct steam emission, or in any location where a lighting fixture may be damaged.

To Install the Junction Box:

1. Remove the two screws from the interior clips of the junction box, and hand-screw them into the wings of the junction box **(Figure 7)**.
2. Remove one of the four knockouts from the junction box **(Figure 7)**. the resulting hole will allow routing of the 30-foot LED power cable.
3. Locate the two tabs on the junction box, and line them up against a ceiling joist. The tabs locate the junction box slightly raised from the joist. Screw the two screws into the ceiling joist to secure the junction box **(Figure 8)**.
4. Route one end of the 30-foot LED power cable through the knockout into the junction box, and fasten it to one of the interior clips to hold it in place **(Figure 9)**. Note that both ends of the 30-foot LED power cable are the same.

IMPORTANT NOTE: Contact MrSteam to purchase an optional 60-foot cable (Part No. 104268-60).

NOTICE

- Be careful not to strain, staple, pinch, or otherwise damage the cable.
- Route cable as required to permit replacement.
- Cable should be run in dedicated conduit to facilitate installation, service, and replacement.
- To prevent damage to the cable, do not route cable close to hot water, steam piping, or any heat source.

5. After the junction box is completely installed, ensure that you create an opening in the steam room ceiling that aligns with the junction box **(Figure 10)**.

⚠ WARNING

- Installation to be performed by a qualified and licensed electrician.
- **Shock Hazard.** Ensure that power is turned off during installation. Turn off power at breaker panel.

⚠ CAUTION

Failure to use the junction box with correctly installed retention springs may result in the ChromaSteamX fixture falling and causing injury.

NOTICE

- To prevent leaks, do not install the ChromaSteamX fixture where direct contact with steam emission or water spray could occur.
- The ChromaSteamX fixture is not intended to be installed underwater. To prevent leaks, do not install the ChromaSteamX fixture in a location where it could become submerged.
- The ChromaSteamX fixture is not rated for insulation contact. Insulation must be a minimum of 3" away from all sides of the ChromaSteamX fixture assembly to prevent damage to the fixture.

All drawings are for illustrative purposes only.

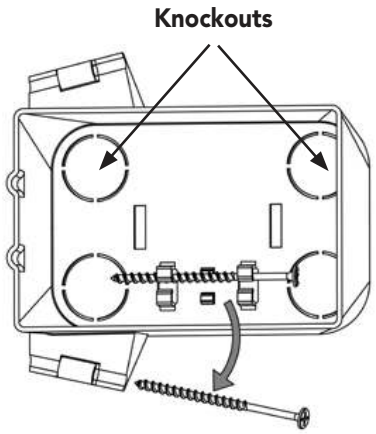

Figure 7

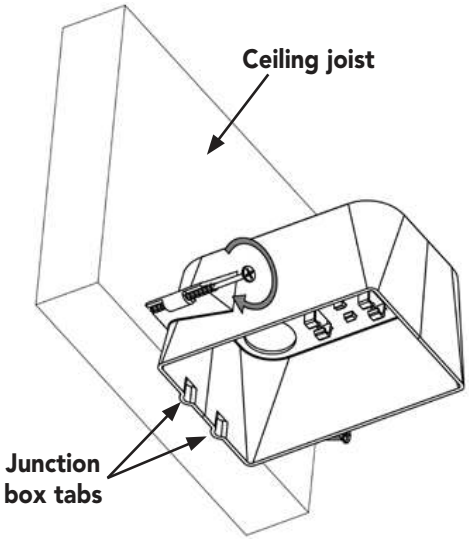

Figure 8

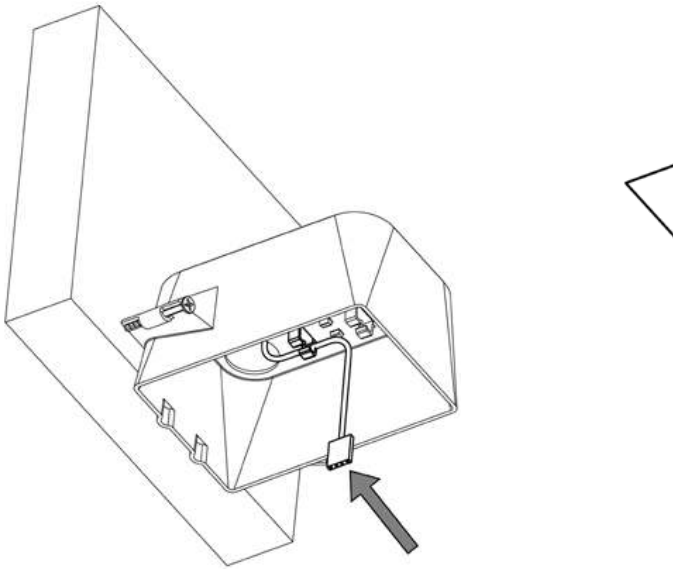

Figure 9

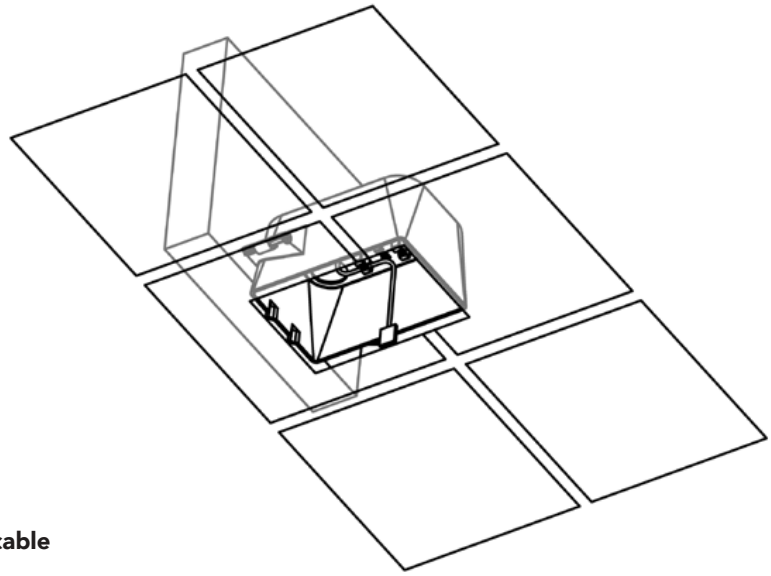

Figure 10

All drawings are for illustrative purposes only.

Installing the Fixture

To Install the Fixture:

1. Connect the ChromaSteamX fixture's pigtail to the 30-foot LED power cable in the junction box **(Figure 11).**

IMPORTANT NOTE: Test that the fixture operates correctly prior to continuing with the following steps.

2. Clean the surface of the ceiling to ensure the double-stick adhesive of the fixture bonds completely to the ceiling.
3. Peel off and discard the protective layer from the fixture's double-stick adhesive **(Figure 12)**.
4. Squeeze the retention springs on the back of the fixture and fit them into the junction box **(Figure 13)**. Insert the fixture into the junction box and affix it to the ceiling, being careful not to pinch the pigtail/LED power cable (note that the pigtail/control LED power cable is not shown in **Figure 13**. Press firmly around edges of the fixture to ensure adhesion to ceiling.
5. Apply a bead of silicone around the perimeter of the fixture **(Figure 14)** as required to create a moisture seal between the fixture and the steam room ceiling. Use tape or other means as required to keep the fixture in position as the silicone cures, for 24 hours.

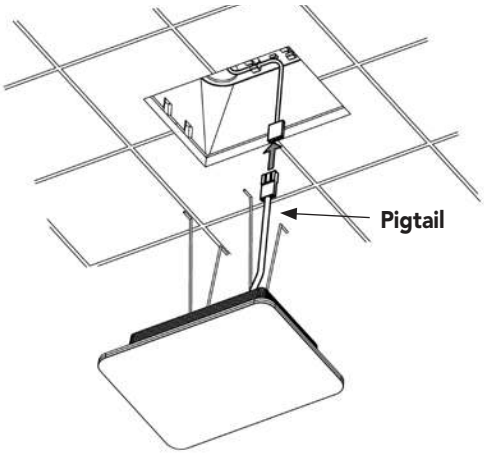

Figure 11

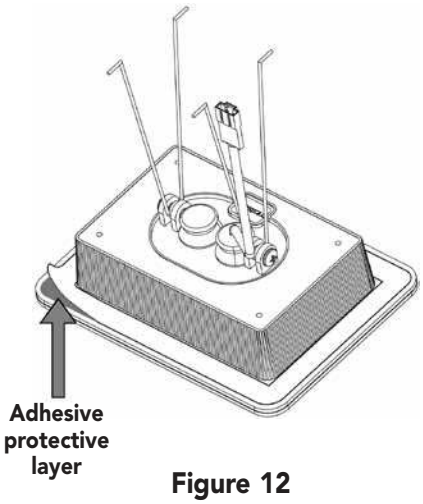

Figure 12

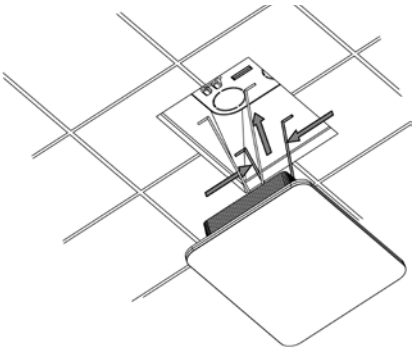

Figure 13

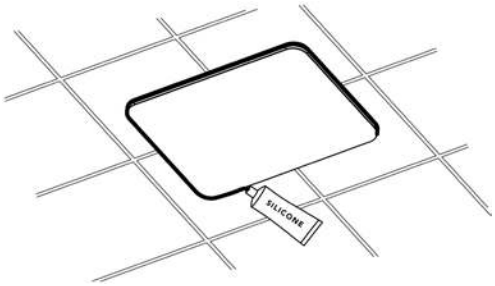

Figure 14

All drawings are for illustrative purposes only.

Connecting the ChromaSteamX

Fixture to the ChromaSteamX Control Box

WARNING

- **Shock Hazard.** Ensure that power is turned off during installation. Turn off power at breaker panel.
- **Shock Hazard.** To prevent electric shock, do not remove the screws on the back of the control box. No user-serviceable parts inside. Refer servicing to qualified service personnel only.

At this point in the installation:

- Each of the LED cluster's pigtail has been connected to one end of the 30-foot LED power cable (see page 9), and the other end has been routed through conduit so that it is located for connection to the control box.

1. Connect the free end of the LED power cable(s) to any of the ports labeled Chroma1 through Chroma4 **(Figure 15)**

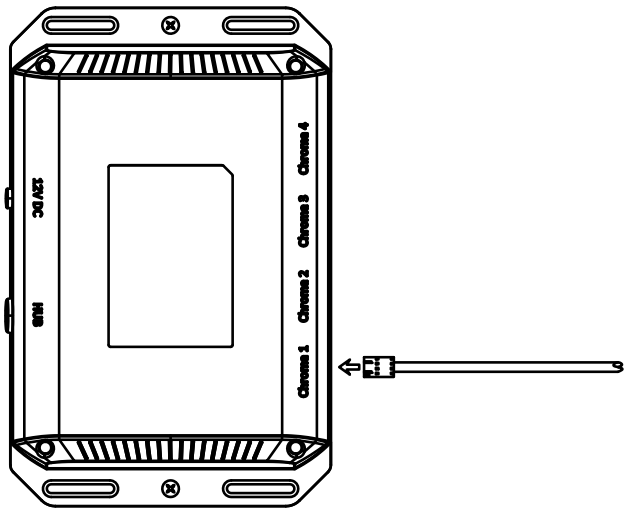

Connecting LED Power Cable
Figure 15

All drawings are for illustrative purposes only.

Connecting the ChromaSteamX Control Box to iSteamX Hub

.

1. Plug the accessory communication cable into the port labeled Hub on the LED controller. **(Figure 16)**

2. Plug the FREE END of the accessory communication cable into any of the accessory ports on the iSteam Hub. **(Figure 17)**

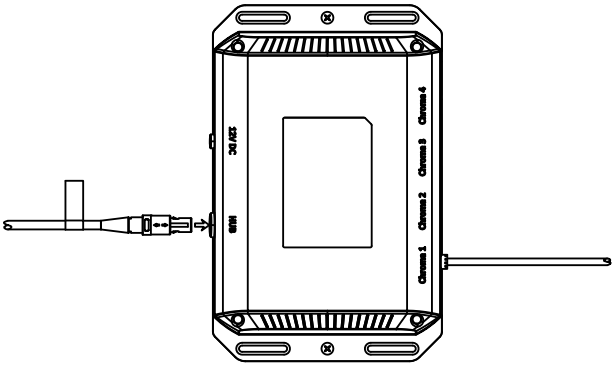

Connecting LED Power Cable
Figure 16

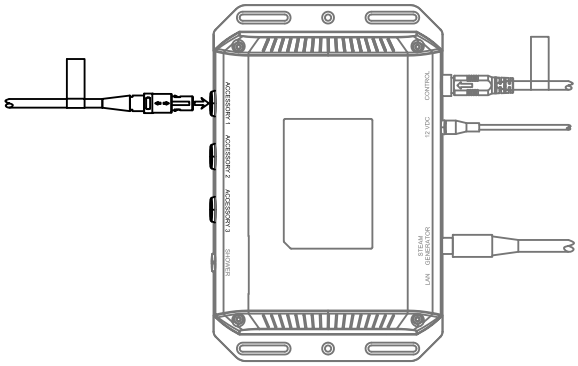

Connect LED Controller to iSteamX HUB
Figure 17

All drawings are for illustrative purposes only.

Connecting the ChromaSteamX to Power

Before specs, finish up installation

1. Plug in the power supply provided with ChromaSteamX into the **(Figure 18)** ChromaSteamX control box port marked 12 VDC.
2. Plug the power supply into a standard outlet.

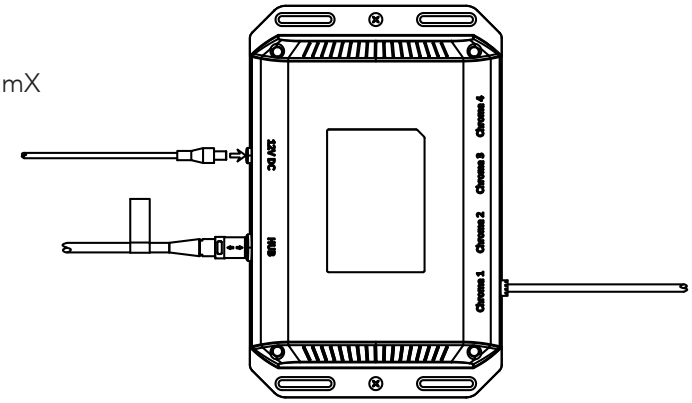

Connecting Control Box to Power
Figure 18

ChromaSteamX Specifications

ENVIRONMENTAL RATINGS	CONTROL BOX	FIXTURE
Operating temperature:	-4 °F (-20 °C) to 140 °F (60 °C)	-4 °F (-20 °C) to 140 °F (60 °C)
Storage temperature:	-22 °F (-30 °C) to 185 °F (85 °C)	-22 °F (-30 °C) to 185 °F (85 °C)
Humidity:	N/A	100%, condensing
Water resistance:	N/A	Designed to IP67

MECHANICAL	CONTROL BOX	FIXTURE
Weight:	7 lb (0.45 Kg)	1 lb (0.45 Kg)
Dimensions (W x H x D):	10″ x 7″ x 1 7/8″	6 5/16″ x 4 11/16″ x 1 1/2″
	(179 mm x 156 mm x 57 mm)	(161 mm x 120 mm x 38 mm)

LINE INPUT	CONTROL BOX
Input voltage:	100-240 VAC 50/60Hz (Power Supply)

LED OUTPUTS	CONTROL BOX
	5 VDC SA Max
	up to 78,000 colors
	2 transition effects

All drawings are for illustrative purposes only.

HOMEOWNRE/END-USER INSTRUCTIONS

About ChromaSteamX

Like water and heat, light is a fundamental life force and may improve your physical and mental state. The Mr.Steam ChromaSteam®X system integrates light with steam, creating chromatherapy environments rich with color, mood, and warmth:

- ChromaSteamX suffuses the steam shower with a spectrum of color from airy blue to sensual red.
- Vapor-sealed, low voltage LED module yield long-lasting high performance and cool operation.
- ChromaSteamX offers a wide range of 78,000 different colors.

ChromaSteamX Warranty

To view or download the **MrSteam® Accessory Warranty** and register your product, go to: **blog.mrsteam.com/wr**

Operating ChromaSteamX

You can control the ChromaSteamX LED module from within your steam room using the iSteamX control. Select from 78,000 different colors — and control the brightness of the light — all from a simple interface.

To operate the ChromaSteamX using iSteamX:

1. Turn on iSteamX and wait for the iSteamX home screen to appear.
2. Turn on the ChromaSteamX fixture **(Figure 21)** by tapping the **LIGHT BULB** icon (**A**) to enter the Chroma user interface.
3. Tap anywhere on the color wheel or the on button, to turn ChromaX on.
4. Tap anywhere in the color wheel (**A**) to choose the desired color. Slide the brightness control (**B**) left or right to choose the desired intensity of light.
5. Turn on preset colors by tapping on any color in the preset list, scroll to find more colors.
6. Turn off ChromaSteamX by tapping the off button.
7. Exit the Chroma interface by tapping the X in the corner of the screen.

⚠ CAUTION

Note that ChromaSteamX is for mood lighting only, and does not substitute for general shower illumination.

NOTICE

ChromaSteamX only works with iSteamX.

IMPORTANT NOTE: For complete instructions on operating the iSteamX, refer to the iSteam technical manual (see www.mrsteam.com).

Figure 21

Figure 22

Figure 23

Figure 24

Figure 25

Figure 26

All drawings are for illustrative purposes only.

mr.steam®

Feel Good Inc.®

www.mrsteam.com

Products, information and specifications are subject to change without notice.
Please call Technical Support at 1.800.76.STEAM (East Coast) or 1.800.72.STEAM (West Coast) for more information.

NOTICE The model and serial number is printed on the data plate on the front of the steam bath generator. Have this information available when contacting Technical Service.

---

mr.steam® hello@mrsteam.com | www.mrsteam.com

43-20 34th Street, Long Island City, NY 11101 TEL: 1 800 76 STEAM I 9410 S. La Cienega Blvd. Inglewood CA 90301 TEL: 1 800 72 STEAM

2020 © MrSteam and des., A Lifetime of Pleasure, AirTempo, AromaFlo, AudioWizard, AutoFlush, AutoSteam, Butler Package, ChromaSteam, Clean Steam...Every Time, Club Therapy, CT Day Spa, Digital 1, Express Steam, Feel Good Inc., From Bathroom to Spa, HomeWizard, iButler, iGenie, iSpa Package, iSteam, iTempo, iTempo/Plus, Linear Steamhead, Making Wellness a Way of Life, Music Therapy, My Steam, SmartSizing, Spa Package, Steam Genie, Steam on Demand, Steam in a Box, Steam@Home, SteamStart, SteamTherapy, Tala, Tala Bath & Body, Tempo, The Intelligent Steambath, Valet Package, and Virtual Spa System are registered trademarks of MrSteam.

PUR100580 Rev 6.23

Installation, Operation & Maintenance Manual

AromaSteam

Fragrance Metering Pump for Residential and Day Spa Steam Rooms

Part Number MS AROMA (104496)

IMPORTANT: Leave this material with the home owner.

mr.steam® | Feel Good Inc.®

INSTALLER SECTION

BEFORE INSTALLING

Carefully inspect the AromaSteam and packaging for shipping damage. In the event of shipping damage, please contact the carrier for claim information. Our customer service department can assist you with product replacement.

Read these instructions before installation or service. Although the AromaSteam has been fully qualified for shipment by MrSteam, the following must be reviewed for proper, safe and enjoyable steam bathing:

1. Verify that the model and accessories specifications are correct for the application.
2. The physical size of the unit, clearance for plumbing servicing, its distance from the steam room and fragrance location must all be considered before final installation.
3. Consider any controls and accessories before initiating installation. Read the Installation and Operation Manual of all controls and accessories available at www.mrsteam.com technical downloads.

IMPORTANT NOTES:

This document contains important safety, operation and maintenance information. After installation leave this document with the homeowner. Do not discard this document.

The information in this manual should be used in conjunction with consultations with an architect, designer and contractor in determining factors necessary in providing a suitable and safe steam room. The MrSteam AromaSteam is intended to be operated with MrSteam iSteam®, AirTempo® or iTempoPlus® controls only. The controls are to be installed strictly in accordance with the specific manuals provided with the controls or accessories.

WARNING

This room is equipped with a fragrance dispensing system.

Leave the room immediately if you have any adverse or allergic reactions, including difficulty breathing or eye, nasal, throat, or skin irritation and seek medical attention.

mr.steam®
43-20 34th Street, Long Island City NY 111011-800-76 STEAM
www.mrsteam.com

IMPORTANT NOTES:
This "peel and stick" warning label shall be posted in a conspicuous location next to the steam room door.

TABLE OF CONTENTS

Installer's Section:

Box Contents 3
Dimensions 3
Important Safety Information 4
Warning Sticker 5
AromaSteam Overview 6
General System Dimensions 7
Installation 8-14
Troubleshooting 15
Replacement Parts 16

Homeowner's Section

Fragrances 17
Important Safety Information 18
Locating the AromaSteam 19
AromaSteam Operation 19-20

INSTALLER SECTION

Box Contents

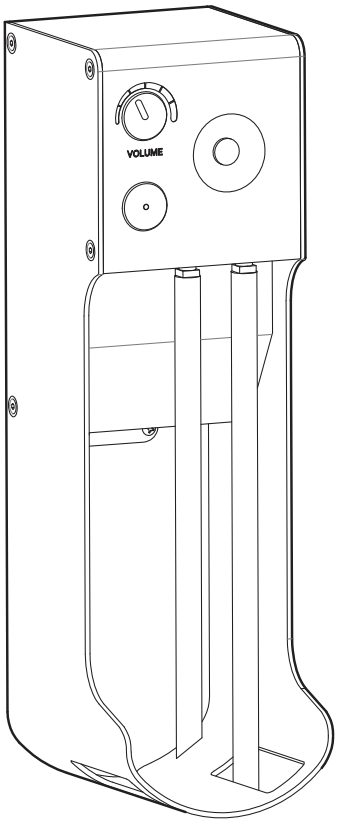

AromaSteam Pump

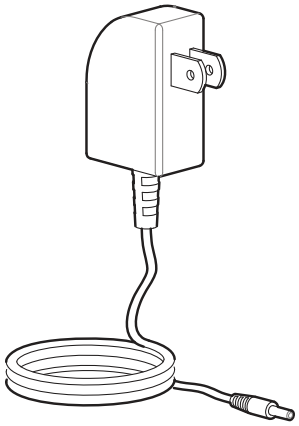

Power Adapter

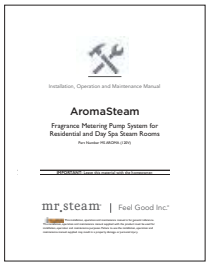

Installation & Operation Manual with peel and stick Warning label

Additional Items included but not shown:
4x Mounting Screws and Anchors for Aromasteam

All Drawings for Illustrative Purposes Only

Dimensions

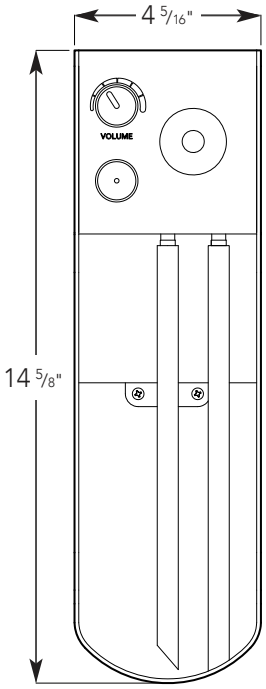

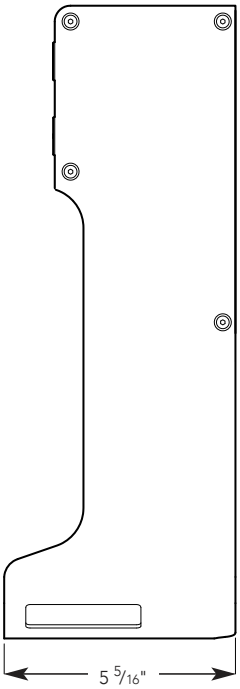

INSTALLER SECTION

IMPORTANT NOTE: As you follow these instructions, you will notice warning and caution symbols. This blocked information is important for the safe and efficient installation and use of fragrance and AromaSteam. These are types of potential hazards that may occur during installation and operation:

WARNING Signals a Hazard that may cause serious injury or death if precautions are not followed.

CAUTION Signals a hazard that may cause minor injury or product damage if precautions are not followed.

IMPORTANT NOTE: This highlights information that is especially relevant to a problem-free installation.

All information in these instructions is based on the latest product information available at the time of publication. MrSteam reserves the right to make changes at any time without notice.

WARNING

- Keep the AromaSteam and fragrance away from heat, sparks, electrical outlets, open flames such as candles and hot surfaces.
- No smoking.
- Keep Out of the Reach of Children.
- Use only non-sparking tools. Take precautionary measures against static discharge.
- Contains denatured ethyl alcohol
- In case of fire: Use CO2, dry chemical, alcohol foam, and water spray for extinction.
- Always store the MrSteam Aroma fragrances in a secure location. Keep container tightly closed and store in a cool, dry and well-ventilated place.

CAUTION

- Avoid fragrance contact with eyes. May cause mild eye irritation. Ingestion may cause irritation, nausea, vomiting.
- Fragrance vapors may cause drowsiness, allergic reactions, difficulty breathing or skin irritation. If condition persists get medical attention.
- The Fragrance Safety Data Sheet provides comprehensive information about MrSteam Aroma fragrances. Contact 1-800-767-8326 or go online at www.mrsteam. com for a copy of the Safety Data Sheet.
- MrSteam fragrances (MS-OIL1 through MS-OIL5) are only for use with the MrSteam AromaSteam. Never use MrSteam fragrances in any other pump, spray or dispensing device. The use of MrSteam fragrances in any other device may cause personal injury.
- The use of any fragrances other than MrSteam fragrances with a MrSteam AromaSteam may introduce excessive concentration of fragrances into the steam room, resulting in personal injury.
- Keep out of the reach of children.
- Always install the supplied Check Valve. Failure to install the Check Valve may result in excessive fragrance delivery into the steam room and cause dizziness and/or personal injury.
- The AromaSteam has been factory set to deliver a suitable amount of fragrance into a typical sized residential or Day Spa steam room. Start with the AromaSteam volume at a very low setting. Gradually increase the volume setting until a comfortable fragrance level is reached. Do not exceed the "Recommended Setting" indicated on the AromaSteam volume.
- Do Not alter or modify any MrSteam product. Doing so may result in a personal injury.
- Discontinue use of the steam generator and control if the steam generator or control are damaged or otherwise not functioning properly. Doing so may result in an inoperative or hazardous installation
- **ELECTRICAL SHOCK HAZARD.** The AromaSteam pump is connected to 120V or 240V line voltage and contains live electrical components. All installation and service to be performed by qualified and licensed electricians and plumbers only. Installation or service by unqualified persons or failure to use MrSteam parts may result in property damage, a hazardous condition or an electrical shock hazard.
- Install according to Local and National plumbing and electrical codes.

INSTALLER SECTION

CAUTION

1. Keep the AromaSteam away from heat, sparks, electrical outlets, open flames such as candles and hot surfaces.
2. Locate the Fragrance and AromaSteam to monitor the consumption of fragrance and for easy replacement.
3. The AromaSteam should not be installed in areas accessible to children. A locked room is strongly recommended (i.e. utility room)
4. The AromaSteam is designed and intended for indoor use only and is to be located indoors in a dry clean location and not subject to moisture, condensation or similar high humidity environments.
5. Do not install the AromaSteam outdoors.
6. Do not install the AromaSteam in a location where water could freeze.
7. Do not install the AromaSteam near corrosive materials and chemicals. Installation in areas having high concentrations of chlorine (such as pool equipment room) should be avoided.
8. Attach the AromaSteam onto a secure vertical surface.
9. Use only non-sparking tools. Take precautionary measures against static discharge.

Important Notes

- MrSteam Aroma fragrances are only for use in residential and day spa installations. Do Not use MrSteam Aroma fragrances in commercial installations.
- Not for use in acrylic or fiberglass rooms. Check with the room manufacturer to determine compatibility of these fragrances with room construction materials.
- Do Not alter or modify any MrSteam product. Doing so will void the warranty.
- MrSteam Aroma fragrances must be disposed of as hazardous waste.

First Aid

IN CASE OF EYE CONTACT: Rinse the eyes immediately with plenty of water, also under the eyelids, for at least 15 minutes. If eye irritation persists: Get medical attention.

IN CASE OF SKIN CONTACT: Remove/Take off immediately all contaminated clothing. Rinse skin with soap and water or shower. If skin irritation persists, get medical attention.

IF SWALLOWED: Do not induce vomiting. Rinse mouth thoroughly with water. If conscious, give large amounts of water. If symptoms persist, call a physician.

Warning Sticker

The "peel & stick" warning label (supplied on page 2) shall be posted in a conspicuous location next to the steam room door.

WARNING

This room is equipped with a fragrance dispensing system. Leave the room immediately if you have any adverse or allergic reactions, including difficulty breathing or eye, nasal, throat, or skin irritation and seek medical attention.

mr.steam®
43-20 34th Street, Long Island City NY 111011-800-76 STEAM
www.mrsteam.com

INSTALLER SECTION

AromaSteam Overview

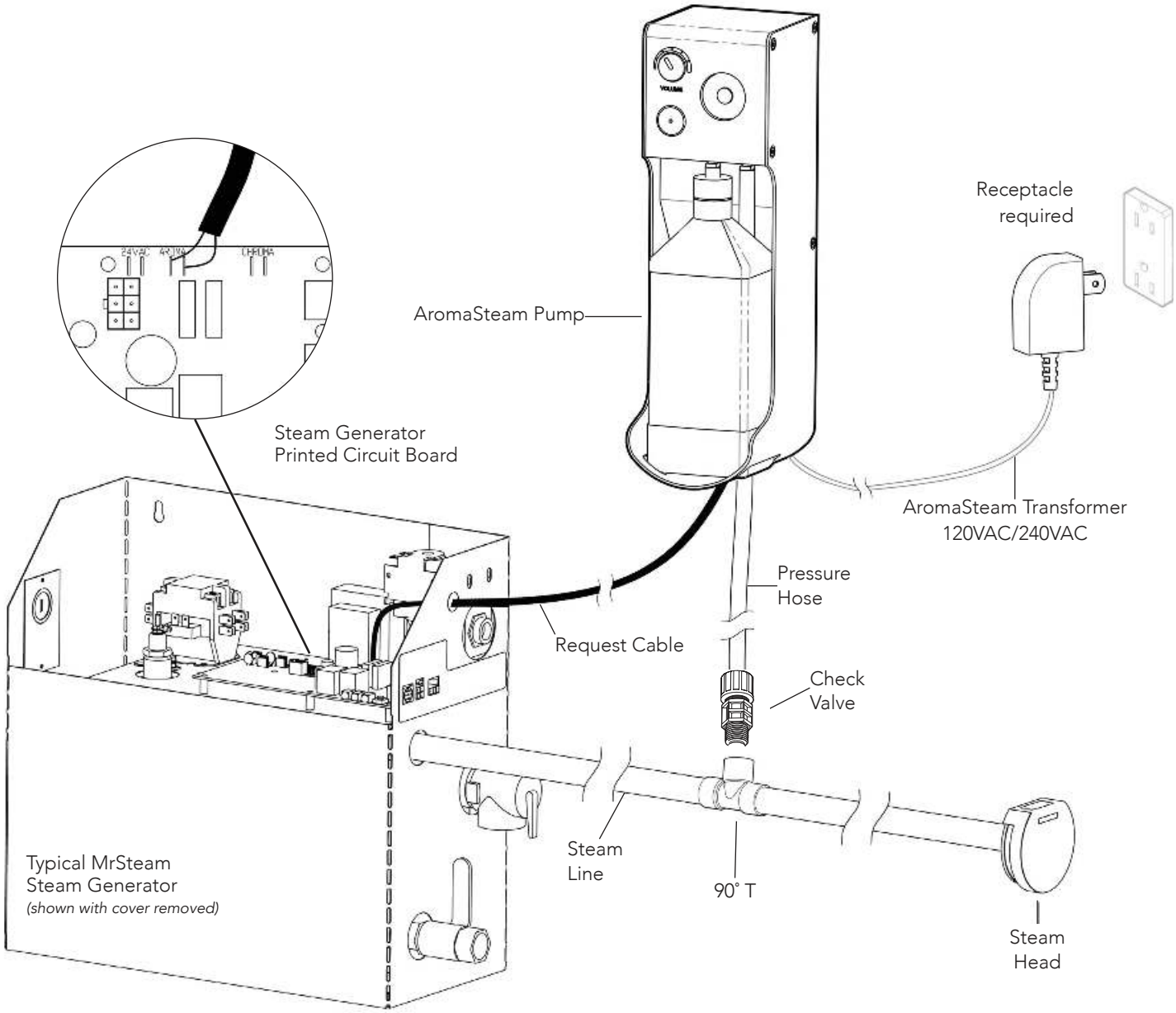

All Drawings for Illustrative Purposes Only

INSTALLER SECTION

General System Dimensions

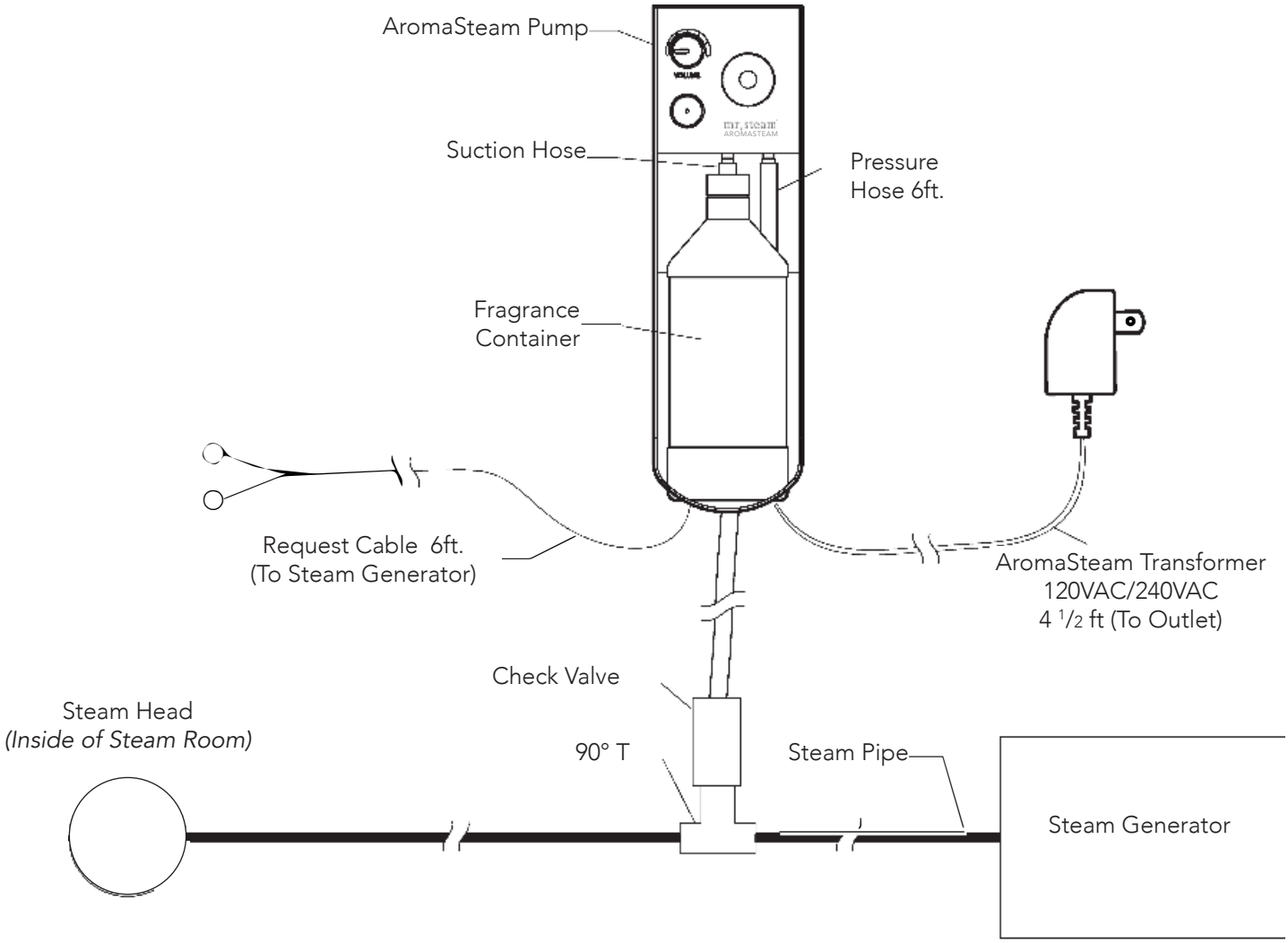

AromaSteam Pump Specs

Dimensions:	4.3"W x 14.8"H x 5.4"D
Weight:	5 pounds
Supply Voltage:	120VAC/240VAC, 50/60 Hz
Max Current Draw:	0.1 Amps

INSTALLER SECTION

Installing the AromaSteam

Tools required:

- Cordless drill with a Phillips bit
- Level

CAUTION

Use only non-sparking tools. Take precautionary measures against static discharge

Locating the AromaSteam:

1. Place in a location that allows visual monitoring of the fragrances level.
2. Place in a location that allows for easy replacement of the fragrance container.
3. Locate the AromaSteam within 6' of the steam generator as required to route the request cable in a safe and secure manner. See the system dimensions on page 7.
4. Locate the AromaSteam within 4' of a grounded outlet as required to route the electrical cord in a safe and secure manner. See the system dimensions on page 7.
5. Locate the AromaSteam within 6' of the steam supply line as required to route the pressure hose in a safe and secure manner. See the system dimensions on page 7.
6. Do not install in an unheated location where water could freeze.
7. Locate in a area where the ambient temperature does not exceed 88°F.

Mounting the AromaSteam on a Wall

1. Pre-drill as required and install the two screws provided. They must be 2 -1/2" inches apart and level as required to securely mount the AromaSteam keyhole slots. Use Drill Template on following page if necessary.
2. Use a level to make sure the screws are level.
3. Mount the AromaSteam keyholes onto the screws. Tighten screws as required to firmly secure the AromaSteam.
4. Use the two mounting screw provided to secure the AromaSteam using the two mounting hole at the middle of the AromaSteam (Diagram 3).
5. Use anchors or other hardware as required for secure mounting. Test the AromaSteam for secure mounting.

Back of Pump

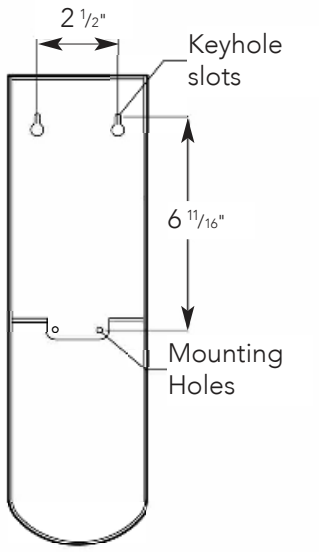

Diagram 1

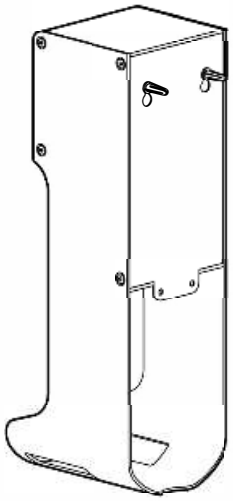

Diagram 2

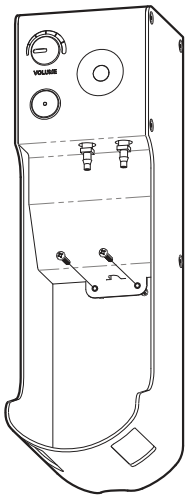

Diagram 3

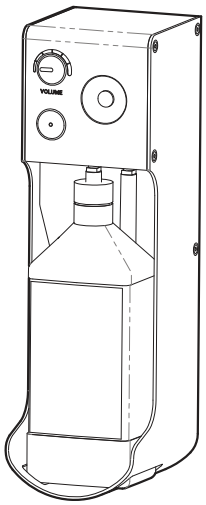

Diagram 4

All Drawings for Illustrative Purposes Only

INSTALLER SECTION

Drill Template

IMPORTANT NOTE: Do no scale template. Template must be printed at 1:1 scale.

WARNING

Failure to print template at 1:1 scale will result in wrong mounting hole locations.

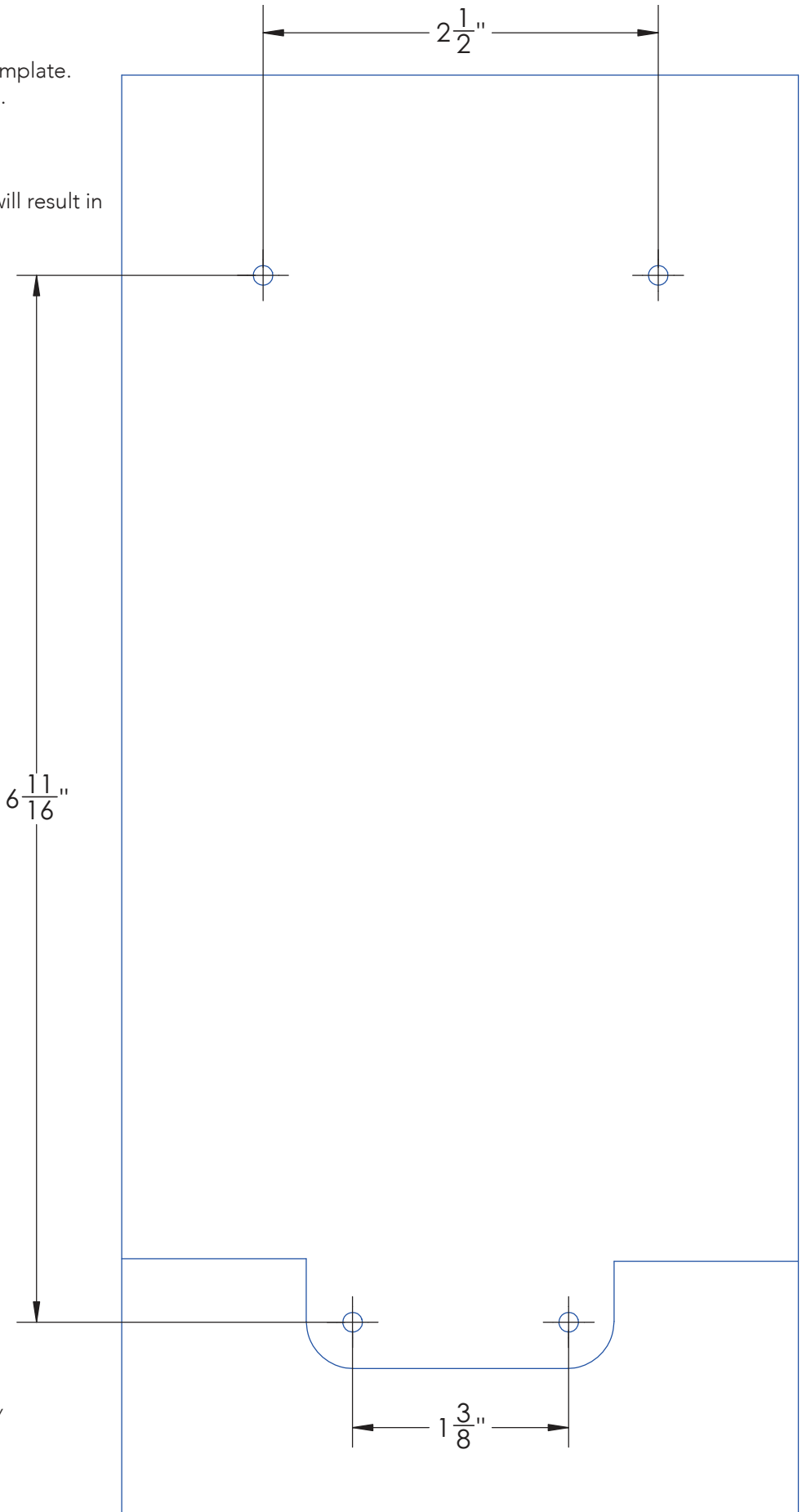

All Drawings for Illustrative Purposes Only

INSTALLER SECTION

Installing the 90 degree T

For optimal results locate a brass 90 degree T (not provided) in the steam supply line within 5-10 feet of the steam head. If using copper tubing for steam lines, install a female 1/2 NPT Tee in the steam line facing upward.

IMPORTANT NOTE: Follow the installation instructions for the steam pipeline in the MrSteam Steam Bath Installation and Operation Manual. Visit www.mrsteam.com to download this document.
Install Check Valve into 90° T/adaptor.

WARNING

Failure to install the supplied Check Valve may result in excessive fragrance delivery into the steam room and cause dizziness and/or personal injury.
The supplied Check Valve prevents excessive amounts of fragrance from entering the steam line and steam room. Never install the AromaSteam without the supplied Check Valve.

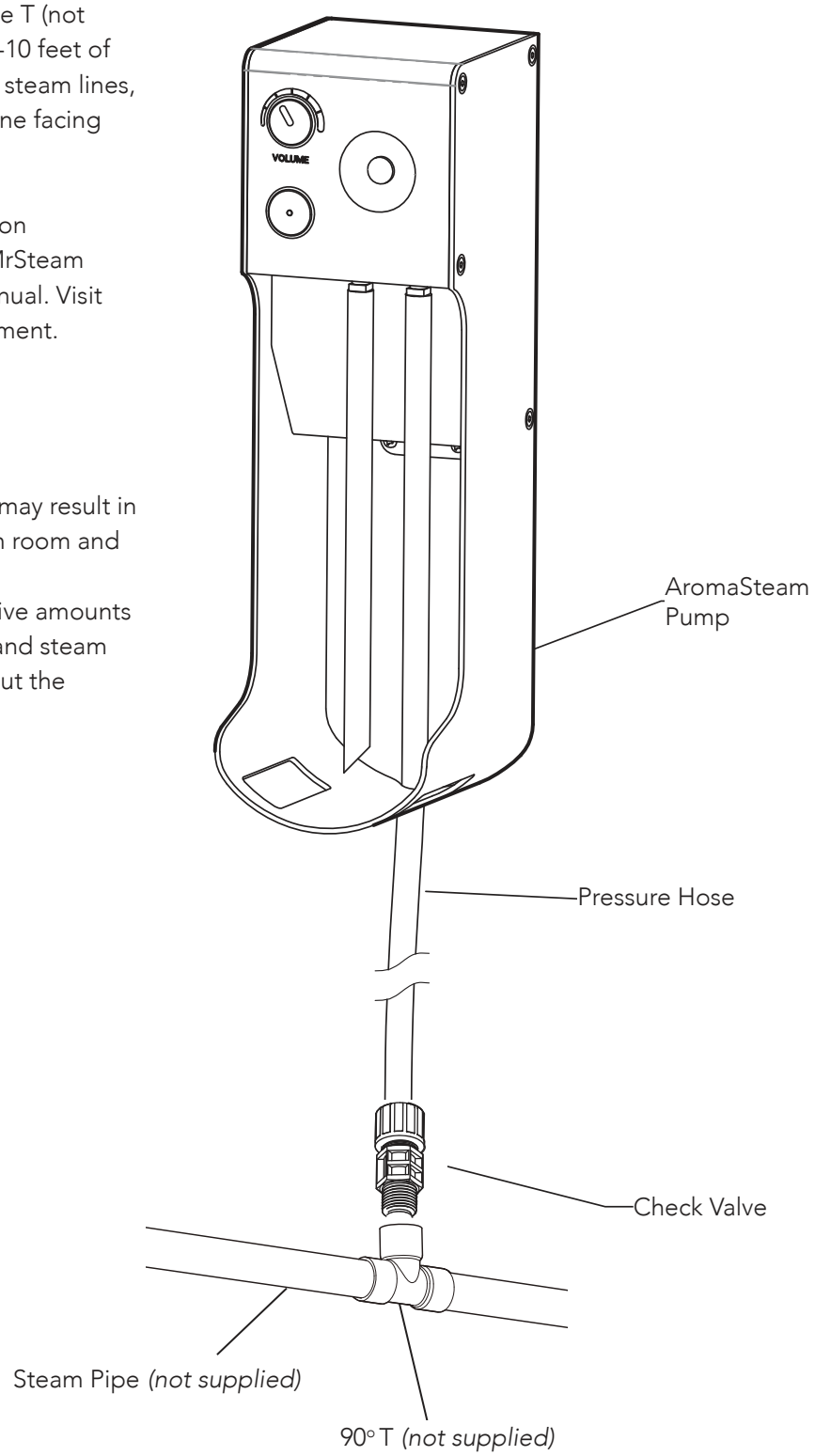

All Drawings for Illustrative Purposes Only

INSTALLER SECTION

Installation of the fragrance container

1. Locate the container cap with the hole that is included with the bottle of fragrance. Replace the fragrance container cap with the cap with the hole. Hand tighten only.
2. Insert the suction hose through the hole in the container cap.
3. Place the fragrance container into AromaSteam's open cavity, ensure both bottom corner of the fragrance container are seated in rectangular openings on the bottom of the AromaSteam.
4. Insert the fragrance container with its label facing outward, so it is visible at all times. This label contains important information (Bottom Diagram).

IMPORTANT NOTE: To prevent damage, do not use tools to tighten the container cap.

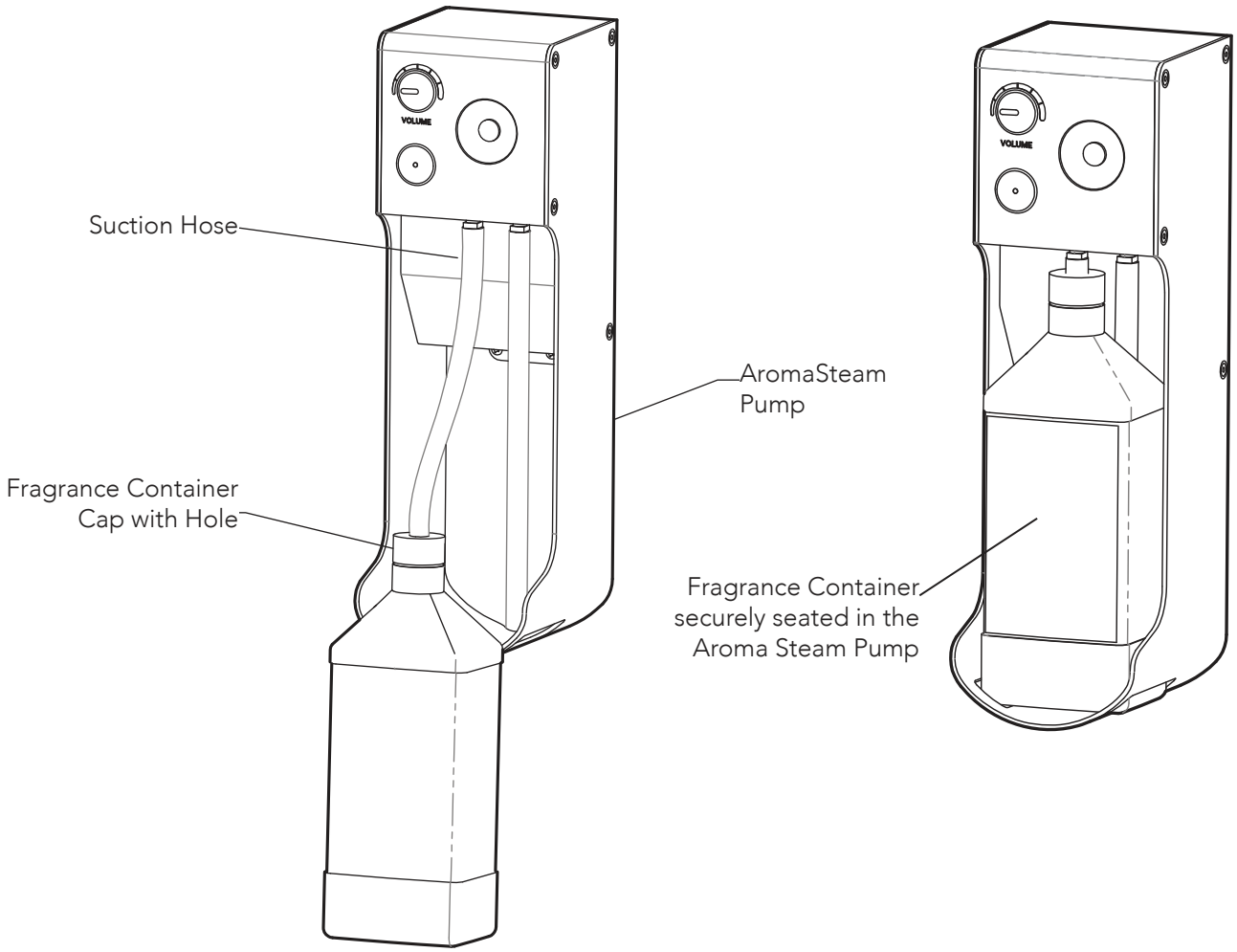

All Drawings for Illustrative Purposes Only

INSTALLER SECTION

Electrical Connection of AromaSteam

IMPORTANT NOTE: AromaSteam is for use with AirTempo® iSteam® and iTempoPlus® controls only.

1. Disconnect all power to the MrSteam steam generator.

CAUTION

Failure to disconnect power may result in an electrocution hazard.

2. Remove the top cover.
3. Run the request cable from the AromaSteam through one of the knock outs in the side of the steam bath generator. Use a strain relief bushing or grommet to prevent chafing.
4. Locate the two quick connect tabs labeled "AROMA" on the printed circuit board in the location shown.
5. Connect the request cable to the terminals. The terminals are not polarized.
6. Connect AromaSteam's transformer into a 120VAC/240VAC wall outlet.

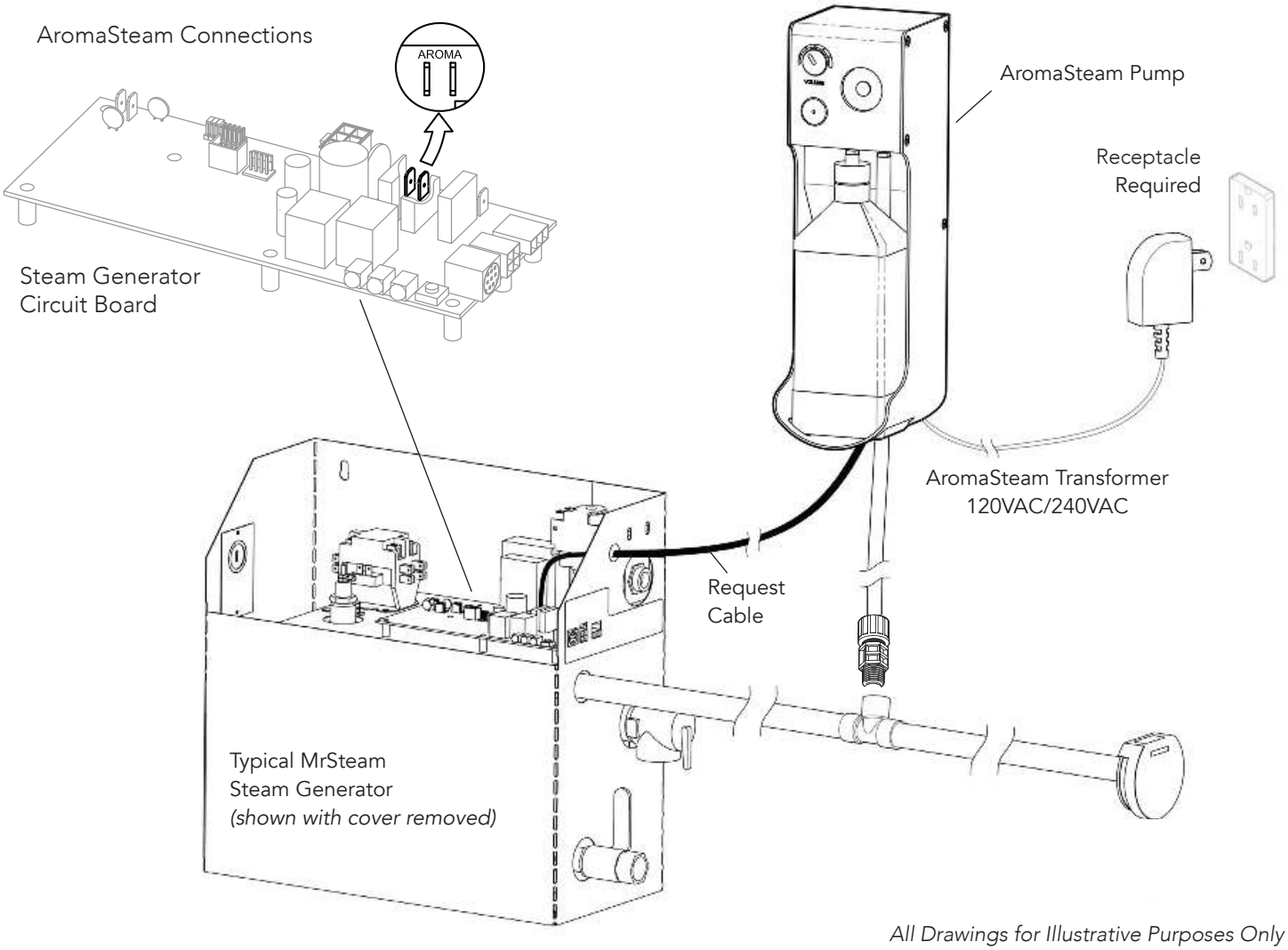

All Drawings for Illustrative Purposes Only

INSTALLER SECTION

Priming the AromaSteam

1. Ensure MrSteam fragrance container is full
2. Press and hold the priming button until liquid fills the suction hose all the way to pump head in AromaSteam.
3. Liquid will automatically enter pressure hose when pump is activated from steam room control. It might take multiple steam sessions to reach steam head, based on length of pressure hose and location of 90^0 T.

IMPORTANT NOTE: If liquid is not filling tubing in AromaSteam head, release priming button and check if suction hose is securely installed onto barb fitting below AromaSteam head and check valve.

IMPORTANT NOTE: If an extended pressure hose is needed, please contact MrSteam Technical Service.

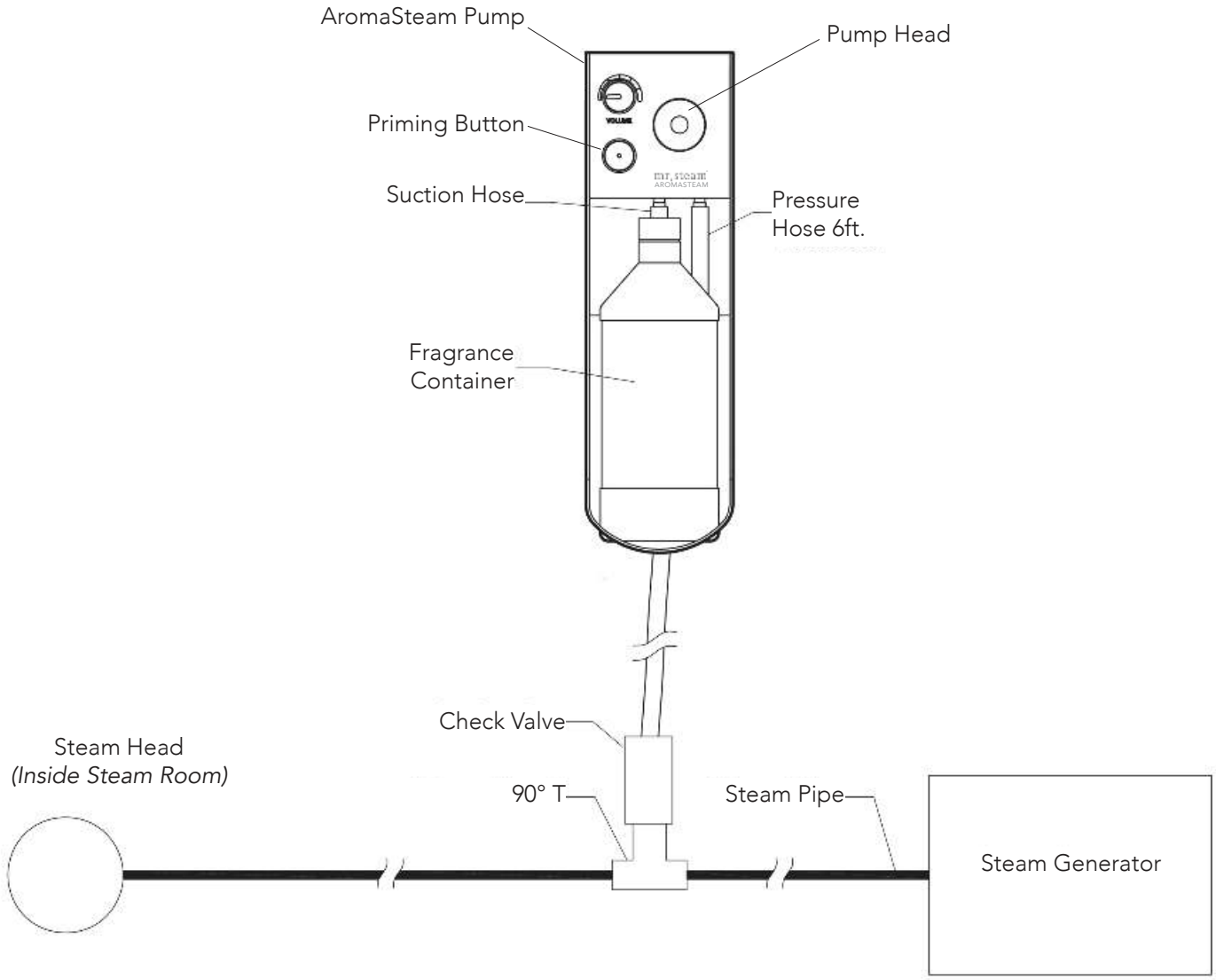

INSTALLER SECTION

Adjusting the Amount of Fragrance Delivery

The AromaSteam has been factory set to deliver a suitable amount of aromatic fragrance into a typical sized steam room. Do not exceed the maximum setting. Please contact the MrSteam Technical Service Department before changing this setting.

Contact the MrSteam Technical Service Dept. at (800) 76-STEAM (West Coast) or (800) 72-STEAM (East Coast) for assistance or additional information.

WARNING

Increasing the settings may introduce excessive concentration of fragrance into the steam room, resulting in a health hazard.

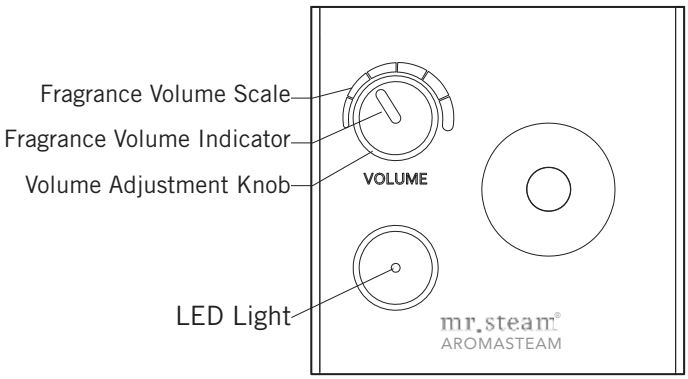

Activating the AromaSteam from a AirTempo® Control

1. Press the ON/OFF button to turn the steam generator ON.
2. Press the AromaSteam button, AROMA will be displayed on the screen when AromaSteam is on.
3. Aroma fragrance will automatically be pumped into the steam line at preset intervals.

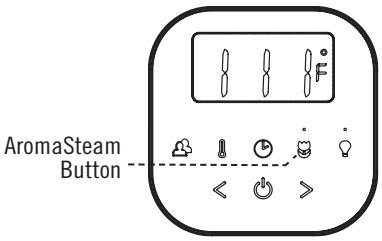

Activating the AromaSteam from an iSteamX® Control

1. Press the START button to turn the steam generator on.
2. In the dashboard press the AromaSteam icon (flower) on the left, then press the On Button to start or Off button to stop.
3. Aroma fragrance will automatically be pumped into the steam line at preset intervals.

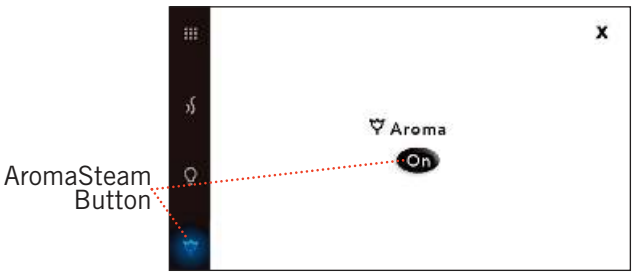

Activating the AromaSteam from iTempo/Plus® Control

1. Press the ON/OFF button to turn the steam generator ON.
2. Press the AromaSteam button, AROMA will be displayed on the screen when AromaSteam is on.
3. Aroma fragrance will automatically be pumped into the steam line at preset intervals.

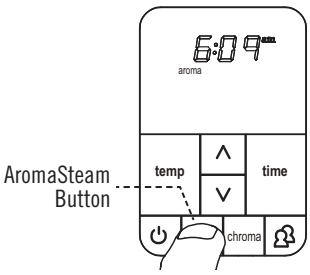

INSTALLER SECTION

Troubleshooting

WARNING

TO AVOID ELECTRIC SHOCK, DISCONNECT POWER TO AROMASTEAM BEFORE SERVICING

AromaSteam does not prime

1. Check if correct voltage is available.
2. Check liquid level in fragrance container. Replenish liquid, if necessary.
3. Check for air bubbles in the suction hose or the AromaSteam head. To eliminate air bubbles see: Priming AromaSteam.
4. Check valves for contamination. Clean valve with compressed air if necessary.

AROMASTEAM DOES NOT INJECT FRAGRANCE INTO STEAM ROOM

1. Check if voltage is available.
2. Check liquid level in fragrance container. Replenish fragrance if necessary.
3. Check for air bubbles in the suction hose or the AromaSteam head. To eliminate air bubbles see: Priming AromaSteam. See page 13.
4. Check valves for contamination. Clean valves if necessary.
5. Check fragrance container for contamination.
6. Check the pressure hose for kinking or jamming. Straighten or replace.
7. Check if fragrance is freely flowing through the Check Valve when the AromaSteam is energized. Apply compressed air through the Check Valve. Attach the compressed air at the point of connection of the pressure hose.
8. Ensure the AromaSteam has been powered up.

AromaSteam fragrance delivery too much or too little

WARNING

The AromaSteam has been factory set to deliver a suitable amount of aromatic fragrance into a typical sized steam room. Please contact the MrSteam Technical Service Department before changing this setting. See page 13 for instructions on adjusting the amount of fragrance delivery.

Contact the MrSteam Technical Service Dept. at (800) 76-STEAM {East coast) or (800) 72-STEAM (West Coast) for assistance or additional information.

Electrical Shock Hazard

WARNING

MrSteam AromaSteam's are connected to 120V/240V line voltage and contain live electrical components. All installation and service to be performed by qualified and licensed electricians and plumbers only. Installation or service by unqualified persons or failure to use MrSteam parts may result in property damage or in a hazardous condition.

INSTALLER SECTION

Replacement Parts

CAUTION

This AromaSteam is factory wired. If the power cord of the AromaSteam is damaged it must be replaced by the MrSteam service department or similarly qualified personnel in order to avoid an electric shock hazard. All electrical connections to be made by a licensed, qualified electrician. Disconnect all power to the steam generator before making power connections.

All items listed below are field serviceable.

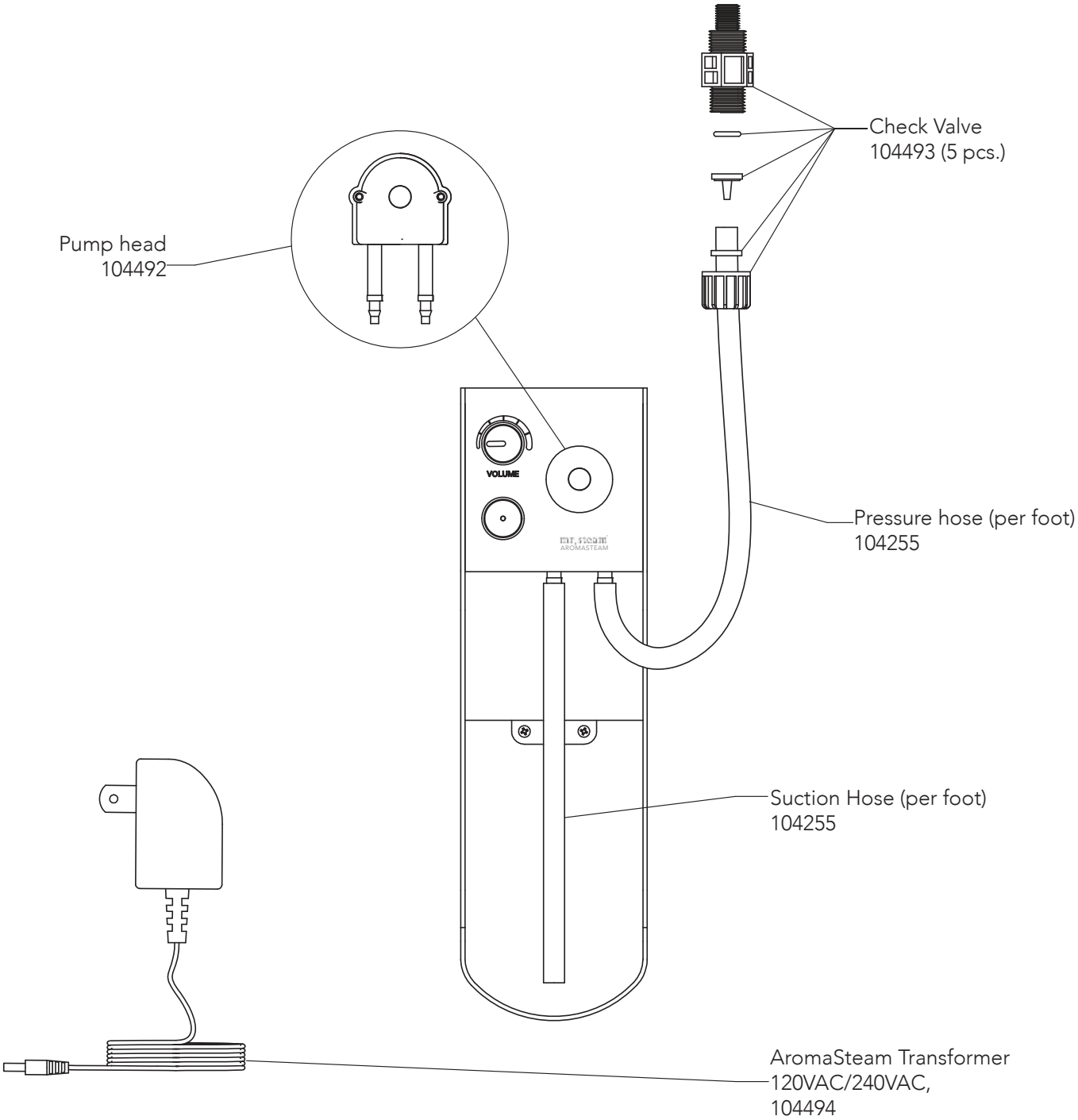

HOMEOWNER SECTION

The AromaSteam's state-of-the-art AromaSteam introduces fragrance into the steam pipe and into your steam shower. MrSteam Aroma is Available in These Five Fragrances:

MrSteam Aroma Fragrances (MS OIL 1-5)

FRAGRANCE	PART NO.	CONTAINER VOLUME.
Eucalyptus	(MS-OIL1)	1 liter /33 fl.oz ..

A deeply refreshing aroma with cleansing effects, eucalyptus may help open air passageways.

Lavender	(MS-OIL2)	1 liter /33 fl.oz.

A sweet, lightly floral scent, lavender may help soothe anxiety with its calming & restorative properties.

Evergreen	(MS-OIL3)	1 liter /33 fl.oz.

A refreshing blend of spruce, fir and pine reminiscent of a forest on a crisp morning.

Energizing Mint	(MS-OIL4)	1 liter /33 fl.oz.

A blend of mint, citrus and herbs that may stimulate and energize.

Breathe	(MS-OIL5)	1 liter /33 fl.oz.

A tropical combination that may help clear chest, nose and sinuses.

The Safety Data Sheet provides comprehensive information about MrSteam Aroma fragrances. Contact 1-800-767-8326 or go online at www.mrsteam.com for a copy of the Safety Data Sheet.

READ ME FIRST!

WARNING As you follow these instructions, you will notice warning and caution symbols. This blocked information is important for the safe and efficient installation and operation of this generator. These are types of potential hazards that may occur during installation and operation:

WARNING Indicates a potentially hazardous situation, which, if not avoided, could result in death or serious injury.

CAUTION Indicates a potentially hazardous situation, which, if not avoided may result in minor or moderate injury or product damage.

IMPORTANT NOTE: This highlights information that is especially relevant to a problem-free installation.
All information in these instructions is based on the latest product information available at the time of publication. Mr.Steam reserves the right to make changes at any time without notice.

HOMEOWNER SECTION

IMPORTANT SAFETY INSTRUCTIONS
READ AND FOLLOW ALL INSTRUCTIONS

WARNING

FLAMMABLE LIQUID AND VAPOR

- Keep away from heat, sparks, open flames, & hot surfaces
- No smoking
- Keep container tightly closed
- Ground/bond container and receiving equipment
- Use only non-sparking tools
- Take precautionary measures against static discharge
- Use explosion-proof equipment
- Wear protective gloves, protective clothing, eye protection or face protection
- Store in a well-ventilated place
- Keep cool
- Dispose of contents and container at an approved waste disposal plant
- To prevent spillage always use with the caddy provided with the pump
- Keep away from children

WARNING

- Avoid fragrance contact with eyes. May cause mild eye irritation. Ingestion may cause irritation, nausea, vomiting.
- Fragrance vapors may cause drowsiness, allergic reactions, difficulty breathing or skin irritation. If condition persists get medical attention.
- The Fragrance Safety Data Sheet provides comprehensive information about MrSteam Aroma fragrances. Contact 1-800-767-8326 or go online at www.mrsteam. com for a copy of the Safety Data Sheet.
- MrSteam fragrances (MS OIL 1-5) are only for use with the MrSteam AromaSteam (part number MS AROMA and MS AROMAC). Never use MrSteam fragrances in any other AromaSteam, spray or dispensing device. The use of MrSteam fragrances in any other device may cause personal injury.
- The use of any fragrances other than MrSteam fragrances with a MrSteam AromaSteam may introduce excessive concentration of fragrances into the steam room, resulting in personal injury.
- Keep out of the reach of children.
- The AromaSteam has been factory set to deliver a suitable amount of fragrance into a typical sized residential or Day Spa steam room. Start with the AromaSteam volume at a very low setting. Gradually increase the volume setting until a comfortable fragrance level is reached. Do not exceed the "Recommended Setting" indicated on the AromaSteam volume.
- Do Not alter or modify any MrSteam product. Doing so may result in a personal injury.

First Aid

In case of Eye Contact

Rinse immediately with plenty of water, also under the eyelids, for at least 15 minutes. If eye irritation persists: Get medical advice/attention.

In case of Skin Contact

Remove/Take off immediately all contaminated clothing. Rinse skin with water/shower. If skin irritation persists, call a physician.

In case of Inhalation

Remove exposed individual(s) to fresh air for 20 minutes. Consult a physician/poison center if individual's condition declines or if symptoms persist.

In case of Ingestion

Rinse mouth thoroughly with water. Do NOT induce vomiting. If conscious give large amounts of water. If symptoms persist, call a physician.

Important Notes:

- Not for use in acrylic or fiberglass rooms. Check with the room manufacturer to determine compatibility of these fragrances with room construction materials.
- Do Not alter or modify any MrSteam product. Doing so will void the warranty.
- MrSteam Aroma fragrances must be disposed of as hazardous waste.

HOMEOWNER SECTION

Locating the AromaSteam/Fragrance:

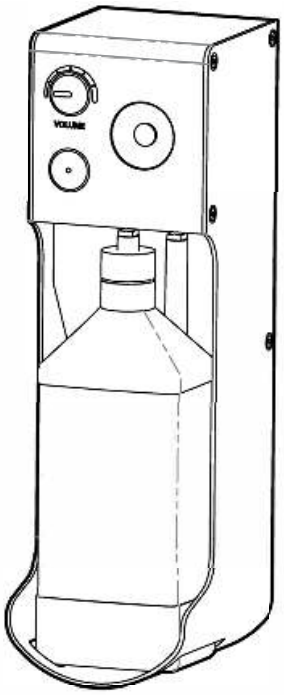

1. Place in a location that allows visual monitoring of the fragrances level.
2. The AromaSteam should not be installed in areas accessible to children. A locked room is strongly recommended (ie: utility room).
3. The AromaSteam is designed and intended for indoor use only. Do not install outdoors.
4. Do not install in an unheated location where water could freeze.
5. Locate in a area where the ambient temperature does not exceed 88° F.

WARNING Using a fragrance container that is not secured in the AromaSteam, or using a AromaSteam that is not mounted may result in spillage, excessively strong vapors or a fire hazard.

6. Insert the fragrance container with the label facing outward so it is visible through the AromaSteam. The label contains important information.
7. Always keep the container in the AromaSteam while it is connected to the dispensing AromaSteam.

OPERATION

Powering Up the AromaSteam

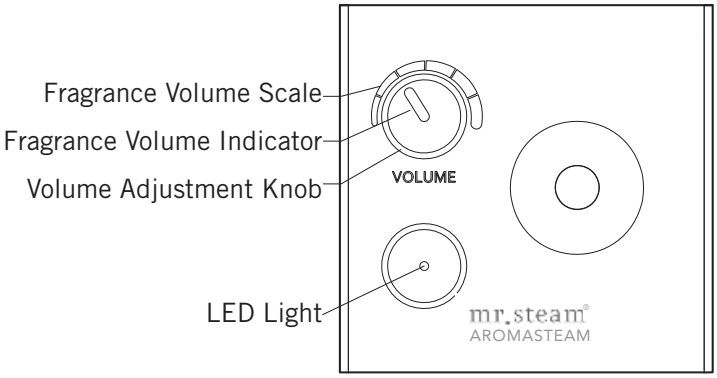

IMPORTANT NOTE: This step only needs to be performed during installation.

1. The AromaSteam needs to be connected to a power source before it can be used.
2. LED light on pump's power block will illuminate when pump is connected to a power source.
3. LED light on pump will illuminate when steam generator sends signal to pump.
4. Adjust fragrance volume to desired level by rotating Volume Adjustment Knob.

Adjusting the Amount of Fragrance

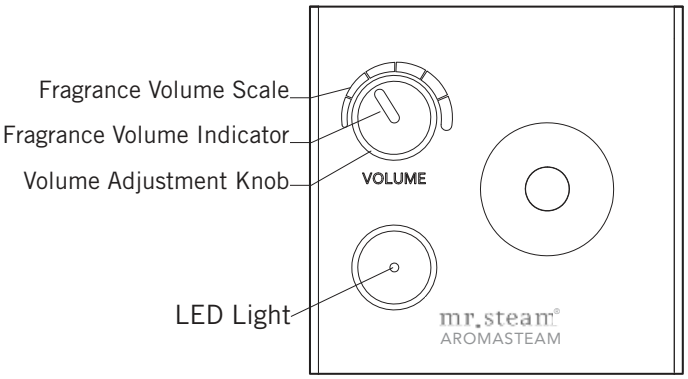

The AromaSteam has been factory set to deliver a suitable amount of fragrance into a typical sized steam room. Do not exceed the maximum setting. Please contact the MrSteam Technical Service Department before changing this setting.
Contact the MrSteam Technical Service Dept. at (800) 76-STEAM (East coast) or (800) 72-STEAM (West Coast) for assistance or additional information.

WARNING

Increasing the settings may introduce excessive concentration of fragrance into the steam room, resulting in a health hazard.

HOMEOWNER SECTION

OPERATION (cont.)

Activating the AromaSteam from a Control Air Tempo® Control

1. Press the ON/OFF button to turn the steam generator ON.
2. Press the AromaSteam button, AROMA will be displayed on the screen when AromaSteam is on.
3. Aroma fragrance will automatically be pumped into the steam line at preset intervals.

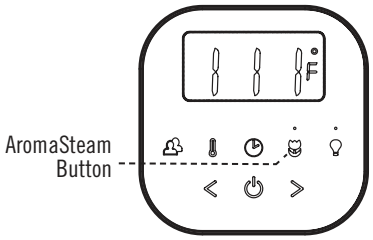

iSteamX® Control

1. Press the START button to turn the steam generator on.
2. In the dashboard press the AromaSteam button, the button will be highlighted when AromaSteam is on.
3. Aroma fragrance will automatically be pumped into the steam line at preset intervals.

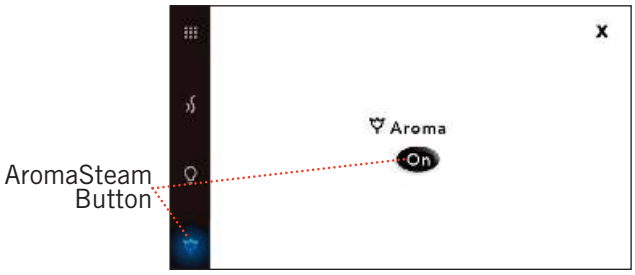

iTempoPlus® Control

1. Press the ON/OFF button to turn the steam generator ON.
2. Press the AromaSteam button, AROMA will be displayed on the screen when AromaSteam is on.
3. Aroma fragrance will automatically be pumped into the steam line at preset intervals.

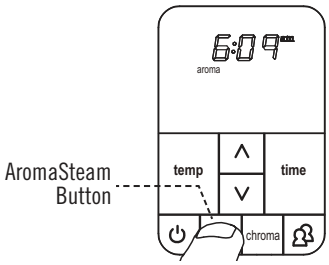

mr.steam®

Feel Good Inc.®

www.mrsteam.com

Products, information and specifications are subject to change without notice. For more information call Sales & Support at 1.800.767.8326 (East Coast) or 1.800.727.8326 (West Coast) for more information.

mr.steam® hello@mrsteam.com • www.mrsteam.com
43-20 34th Street, Long Island City, NY 11101 1.800.76.STEAM • 9410 S. La Cienega Blvd. Inglewood CA 90301 1.800.72.STEAM

2023 © Mr.Steam and des., AirTempo, AromaFlo, AutoFlush, AutoSteam, AudioWizard, Butler Package, ChromaSteam, Clean Steam...Every Time, Club Therapy, Digital 1, Express Steam, From Bathroom to Spa, HomeWizard, iButler, iTempo, iTempo/Plus, iGenie, iSizing, iSteam, Linear Steamhead, Making Wellness a Way of Life, MusicTherapy, SmartSizing, Spa Package, Steam Genie, Steam@Home, SteamStart, SteamTherapy, Tala, Tala Bath & Body Therapy The Intelligent Steambath, Valet Package, and Virtual Spa System are registered trademarks of Mr.Steam.

PUR103938 REV .23

Condensation Pan

103867 & 104402

Mr.Steam strongly recommends the use of a condensation pan in the unlikely event of a plumbing leak.

Locate the condensation pan on a solid level surface and place the steam generator inside the condensation pan. Insure the steam generator is level.

All plumbing shall be performed by a qualified licensed plumber and in accordance with applicable national and local codes. Check local plumbing code for receptor, trap and vent requirements. Condensation pans drain by gravity.The condensation pan is equipped with an integral 3⁄4" NPT fitting.

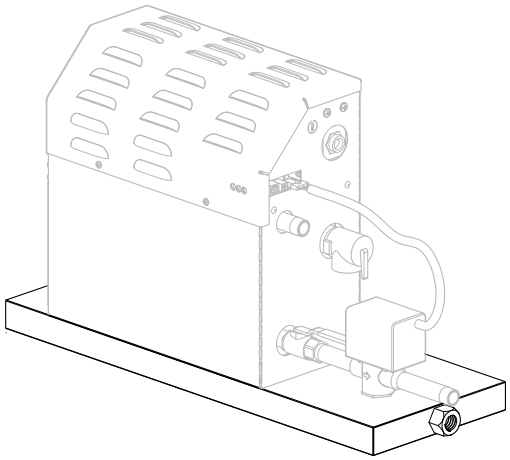

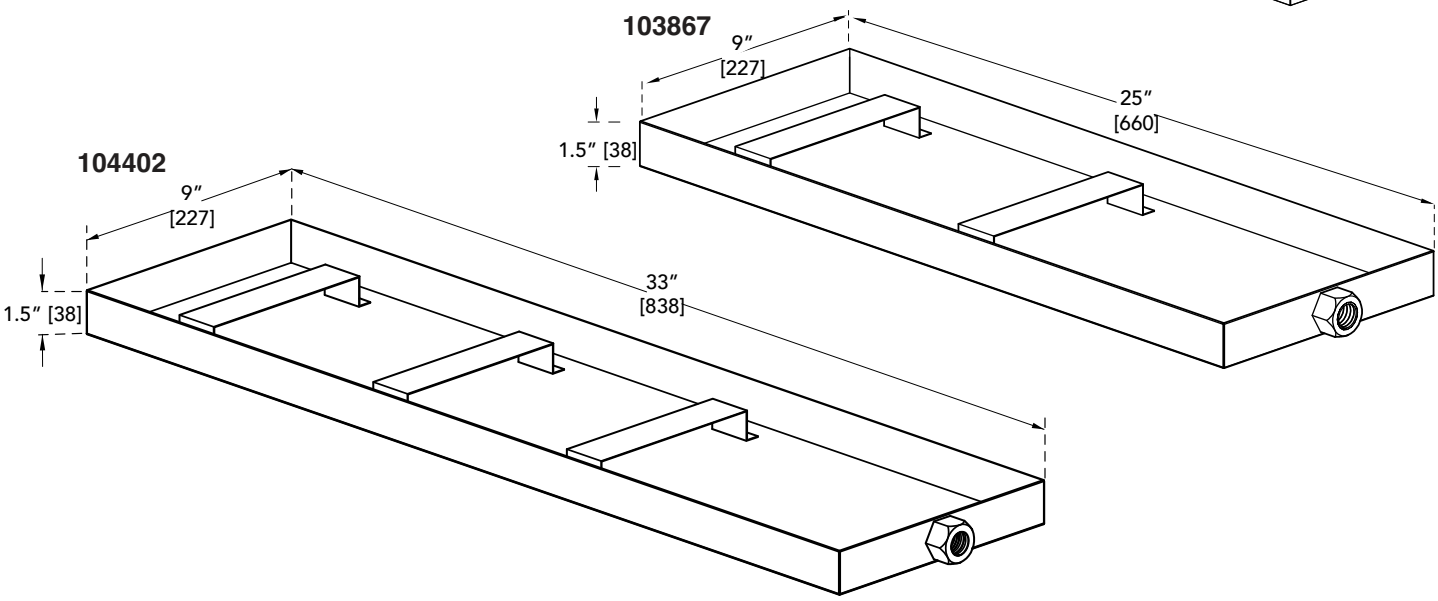

NOTE: For MX4E, MX5E and MX6E use model 104402

FOR ILLUSTRATIVE PURPOSES ONLY. **IMPORTANT NOTE: FOR SAFE AND TROUBLE FREE INSTALLATION** visit mrsteam.com before installation to download the Installation, Operation and Maintenance Manual or refer to the manual provided with the unit.

MODEL	PROJECT INFORMATION	
☐ 103867 ☐ 104402	Location:	Contractor:
	Architect:	Submitted By:
	Engineer:	Date:
Notes:		

mr.steam®

Optional AutoFlush® System

INSTALLATION INSTRUCTIONS

BOX CONTENTS:

- AutoFlush System Valve with Cord
- Installation Instructions.

ASSEMBLY OF OPTIONAL AUTOFLUSH® SYSTEM

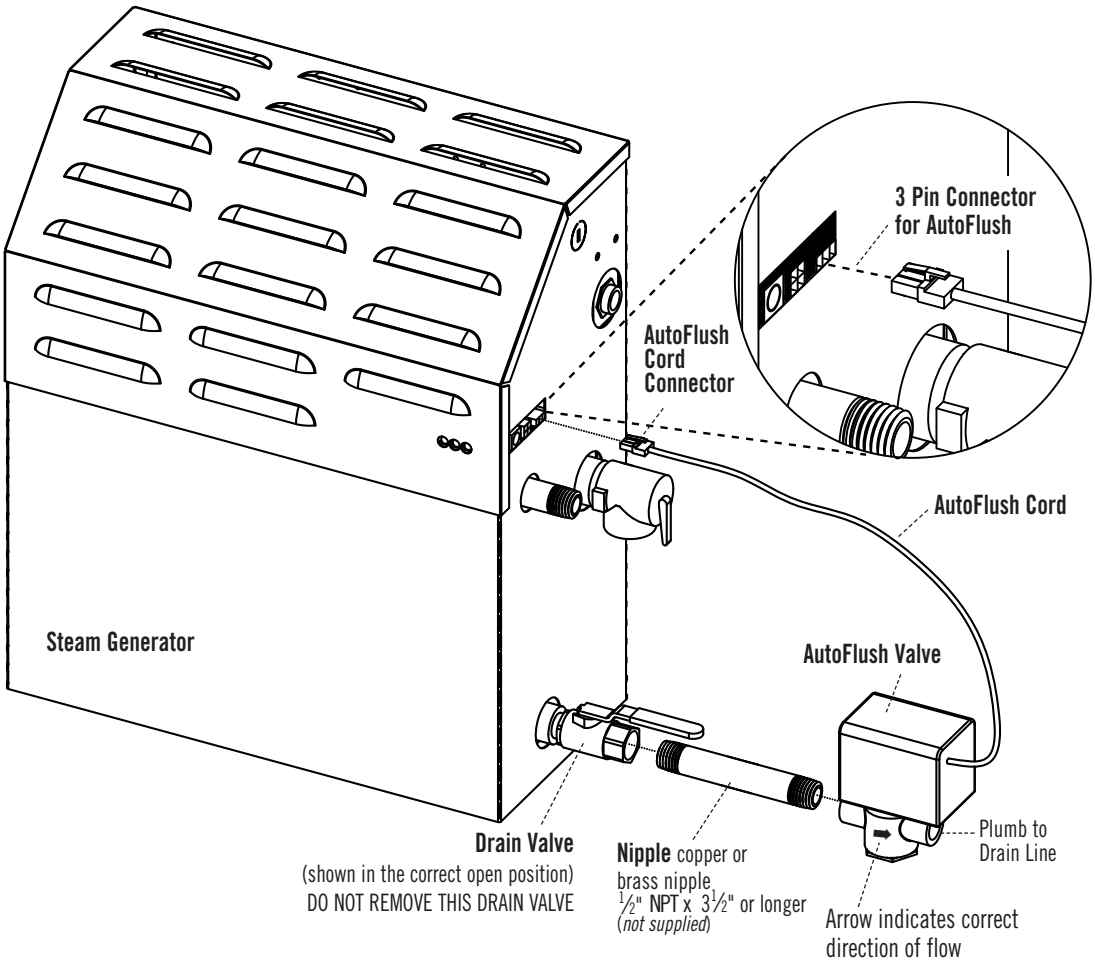

OPERATION

The optional AutoFlush System feature automatically drains the MrSteam system following each use. A time delay allows the water to cool down (about two hours) before it drains resulting in a safe and gentle operation.

mr.steam® hello@mrsteam.com • www.mrsteam.com
43-20 34th Street, Long Island City, NY 11101 1 800 76 STEAM I 9410 S. La Cienega Blvd. Inglewood CA 90301 1 800 72 STEAM

INSTALLATION INSTRUCTIONS

1. Plumbing to be performed by a qualified plumber and shall be in accordance with applicable National and Local codes. Unit drains by gravity. A drain line that is lower than the AutoFlush assembly must be available. The AutoFlush System valve outlet is threaded 1/2" NPT. Check plumbing code for receptor, trap and vent requirements.
2. Use copper or brass nipple 1/2" NPT x 31/2" (90mm) or longer (not supplied) to connect AutoFlush valve to the Drain Valve (flow direction is indicated on bottom of AutoFlush Valve).

CAUTION DO NOT REMOVE THE DRAIN VALVE
Removal may cause equipment and property damage. If there is not enough room for the valve, an elbow and a short nipple (*not provided*) can be added.

3. Open Drain Valve (handle must be aligned with brass nipple).
4. Connect the AutoFlush System cord connector to the three pin connector as shown.

WARNING Do not drain into a steam enclosure or any location where accidental contact with drain water may occur. In the event of a power failure the AutoFlush System valve will open and may discharge boiling water.

SWEAT FITTINGS

When using sweat fittings use only tin base solder with a melting point below 600 degrees F. Do not overheat. Ends of water supply tubing must be thoroughly clean for a minimum distance of 1" from ends. Do not remove valve cover.

TO CHECK OPERATION

1. Turn on MrSteam with the control and allow tank to fill with water. (see MrSteam Instruction Manual)
2. Turn off MrSteam with the control. Water should stay in tank.
3. Turn off power at the panel box. Water should discharge from tank.
4. Turn on power at panel box.
5. Repeat

CAUTION PROVIDE DRAIN PLUMBING ACCORDING TO LOCAL CODES. PLUMB AS REQUIRED FOR AUTOFLUSH SYSTEM.

AutoFlush® Shown Fully Assembled

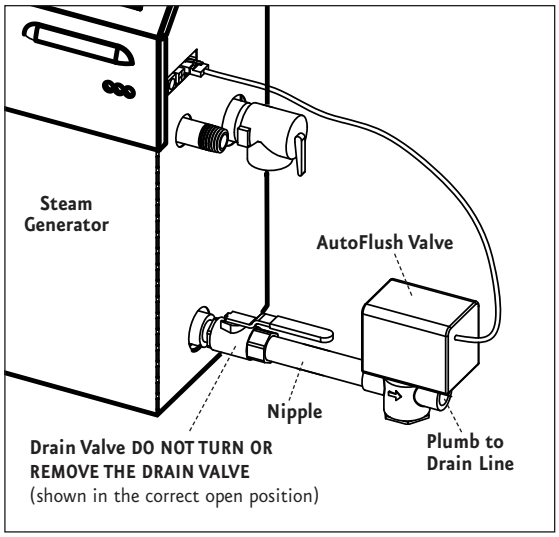

Installing AutoFlush on Older Model Generators SN:899,999 and below

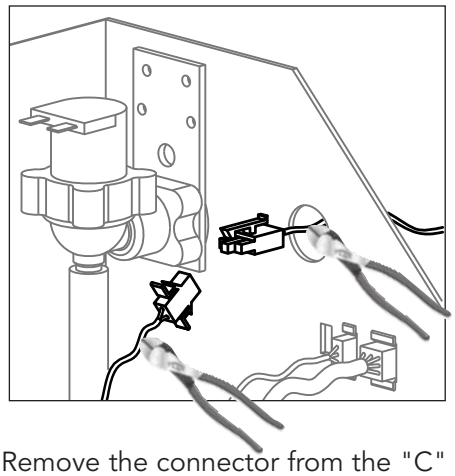

1. Remove the connector from the "C" location in the jacket. Cut off the connector where shown and strip back the wires approx 0.375"
2. Cut the connector off the AutoFlush cable where shown and strip back the wires approx 0.375".
3. Remove the knockout in the side of the generator and install a bushing to prevent chafing.
4. Route the wires from the AutoFlush through the knockouts and connect the white wire from the AutoFlush to the white wire from the circuit board using a wire nut. Repeat for the black wire.

IMPORTANT NOTE: Contact the MrSteam Technical Service Dept. for installation of any equipment not shown in these instructions. East Coast: 800-767-8326; West Coast: 800-727-8326

WARRANTY: To view or download the MrSteam Controls & Accessories Warranty and register your product go to: **blog.mrsteam.com/wr**

mr.steam®

Optional AutoFlush® System

INSTALLATION INSTRUCTIONS

BOX CONTENTS:

- AutoFlush System Valve with Cord
- Installation Instructions.

ASSEMBLY OF OPTIONAL AUTOFLUSH® SYSTEM

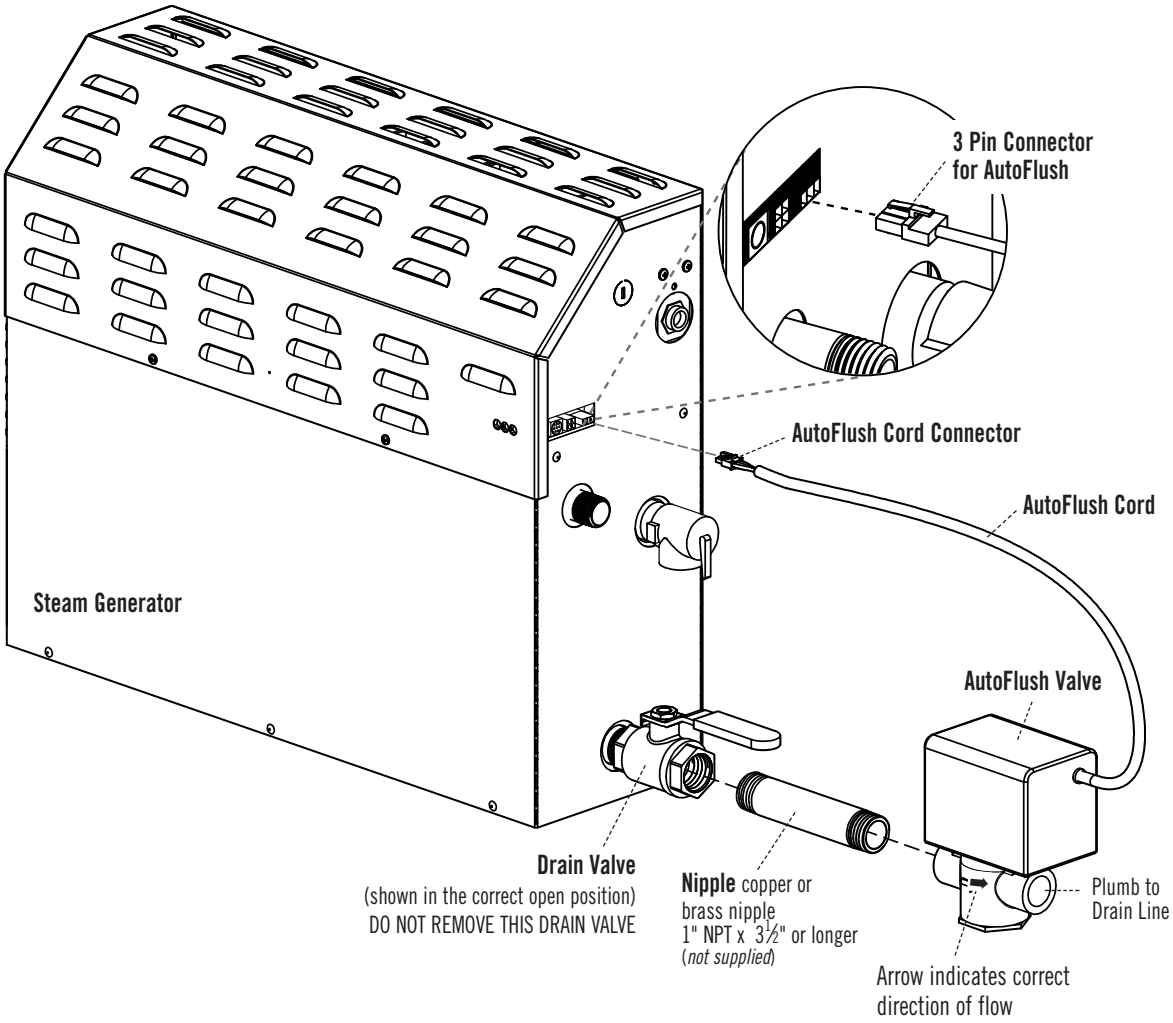

OPERATION

The optional AutoFlush System feature automatically drains the MrSteam system following each use. A time delay allows the water to cool down (about two hours) before it drains resulting in a safe and gentle operation.

mr.steam® hello@mrsteam.com www.mrsteam.com
43-20 34th Street, Long Island City, NY 11101 1 800 76 STEAM I 9410 S. La Cienega Blvd. Inglewood CA 90301 1 800 72 STEAM

INSTALLATION INSTRUCTIONS

1. Plumbing to be performed by a qualified plumber and shall be in accordance with applicable national and local codes. Unit drains by gravity. A drain line that is lower than the AutoFlush assembly must be available. The AutoFlush System valve outlet is threaded 1" NPT. Check plumbing code for receptor, trap and vent requirements.
2. Use copper or brass nipple 1" NPT x 3½" or longer (*not supplied*) to connect AutoFlush valve to the Drain Valve (flow direction is indicated on bottom of AutoFlush Valve)

CAUTION DO NOT REMOVE THE DRAIN VALVE
Removal may cause equipment and property damage. If there is not enough room for the valve, an elbow and a short nipple (*not provided*) can be added.

3. Open Drain Valve (handle must be aligned with brass nipple).
4. Connect the AutoFlush System cord connector to the three pin connector as shown.

WARNING Do not drain into a steam enclosure or any location where accidental contact with drain water may occur. In the event of a power failure the AutoFlush System valve will open and may discharge boiling water.

SWEAT FITTINGS

When using sweat fittings use only tin base solder with a melting point below 600 degrees F. Do not overheat. Ends of water supply tubing must be thoroughly clean for a minimum distance of 1" from ends. Do not remove valve cover.

TO CHECK OPERATION

1. Turn on MrSteam with the control and allow tank to fill with water. (see MrSteam Control Instruction Manual)
2. Turn off MrSteam with the control. Water should stay in tank.
3. Turn off power at the panel box. Water should discharge from tank.
4. Turn on power at panel box.
5. Repeat

CAUTION PROVIDE DRAIN PLUMBING ACCORDING TO LOCAL CODES. PLUMB AS REQUIRED FOR AUTOFLUSH SYSTEM.

AutoFlush® Shown Fully Assembled

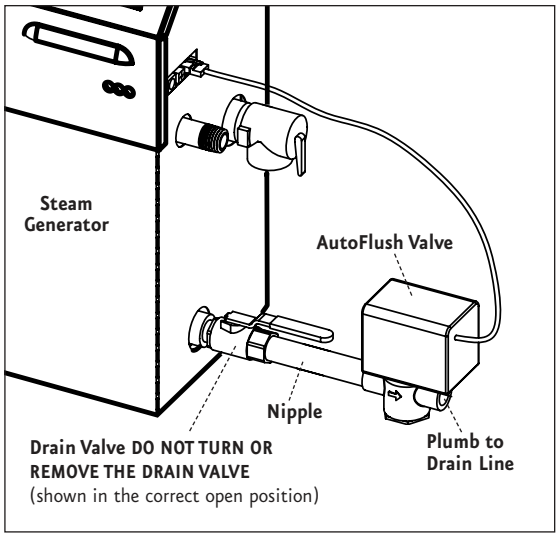

IMPORTANT NOTE: Contact the MrSteam Technical Service Department for installation of any equipment not shown in these instructions. East Coast: (800) 767-8326; West Coast: (800) 727-8326

WARRANTY: To view or download the MrSteam Controls & Accessories Warranty and register your product go to: **blog.mrsteam.com/wr**